z/OS

MVS Using the Subsystem Interface

Version 2 Release 1

SA38-0679-01

Note

Before using this information and the product it supports, read the information in "Notices" on page 595.

This edition applies to Version 2 Release 1 of z/OS (5650-ZOS) and to all subsequent releases and modifications until otherwise indicated in new editions.

© Copyright IBM Corporation 1988, 2013.
US Government Users Restricted Rights – Use, duplication or disclosure restricted by GSA ADP Schedule Contract with IBM Corp.

Contents

Figures . . . v

Tables . . . vii

About this document . . . ix
- Who should use this document . . . ix
- How to use this document . . . ix
- Where to find more information . . . ix

How to send your comments to IBM . . . xi
- If you have a technical problem . . . xi

Summary of changes . . . xiii
- z/OS Version 2 Release 1 summary of changes . . . xiii

Chapter 1. Introduction to Subsystems and the Subsystem Interface (SSI) . . . 1
- What is a subsystem? . . . 1
- What is the SSI? . . . 1
  - Unique Attributes of the SSI . . . 1
  - Types of subsystem requests . . . 2
  - Controlling SSI Processing . . . 3
- Why Write Your Own Subsystem? . . . 3
- What is a Dynamic Subsystem? . . . 4

Chapter 2. Making a Request of a Subsystem . . . 7
- Set Up the Environment . . . 7
  - Subsystem Options Block (SSOB) . . . 7
  - SSOB Function Dependent Area . . . 8
  - Subsystem Identification Block (SSIB) . . . 8
- Make the Request with the IEFSSREQ Macro . . . 9
- Check the Return Code . . . 10
- Summary of Steps . . . 11

Chapter 3. SSI Function Codes Your Program Can Request . . . 13
- SSI Function Code Descriptions . . . 13
  - Process SYSOUT Data Sets Call — SSI Function Code 1 . . . 14
  - User Destination Validation/Conversion — SSI Function Code 11 . . . 39
  - Verify Subsystem Function Call — SSI Function Code 15 . . . 44
  - Request Job ID Call — SSI Function Code 20 . . . 49
  - Return Job ID Call — SSI Function Code 21 . . . 56
  - Request Subsystem Version Information Call — SSI Function Code 54 . . . 60
  - Scheduler Facilities Call - SSI Function Code 70 . . . 77
  - JES Job Information Services— SSI Function Code 71 . . . 87
  - Notify User Message Service Call — SSI Function Code 75 . . . 137
  - SYSOUT Application Program Interface (SAPI) — SSI Function Code 79 . . . 143
  - Extended Status Function Call — SSI Function Code 80 . . . 185
  - JES Properties — SSI Function Code 82 . . . 250
  - JES device information services — SSI function code 83 . . . 341
  - Modify Job Function Call — SSI Function Code 85 . . . 431
- System Information . . . 457

Chapter 4. Setting Up Your Subsystem . . . 461
- Function Routines/Function Codes . . . 461
  - Environment . . . 462
  - Recovery and Integrity . . . 462
  - Placement of Function Routines . . . 463
- Do You Need a Subsystem Address Space? . . . 463
- Defining Your Subsystem . . . 464
  - Naming your subsystem . . . 464
  - Passing parameters . . . 465
  - The primary subsystem . . . 465
- Providing a Routine to Initialize Your Subsystem . . . 466
  - What Your Subsystem Initialization Routine Can Do . . . 466
  - How to Initialize Your Subsystem . . . 467
- Passing Accounting Parameters to Your Subsystem . . . 469
  - Processing the SUBPARM Option . . . 469
  - Example . . . 470

Chapter 5. Services for Building and Using Your Subsystem . . . 471
- Adding Your Subsystem . . . 471
  - Using the IEFSSNxx Parmlib Member . . . 471
  - Using the IEFSSI macro . . . 472
  - Using the SETSSI command . . . 472
- Initializing Your Subsystem . . . 472
  - Coding the Initialization Routine . . . 473
- Defining What Your Subsystem Can Do . . . 474
  - Building the SSVT . . . 475
- Changing What Your Subsystem Can Do . . . 476
  - Enabling Your Subsystem for New Functions . . . 476
  - Disabling Previously Supported Functions . . . 477
  - Associating a New Function Routine with a Supported Function Code . . . 477
- Activating Your Subsystem . . . 478
  - Using the IEFSSVT macro . . . 478
  - Using the IEFSSI macro . . . 478
- Deactivating Your Subsystem . . . 479
- Swapping Subsystem Functions . . . 480
- Storing and Retrieving Subsystem-specific Information . . . 480
  - Storing Subsystem-specific Information . . . 480
  - Retrieving Subsystem-specific Information . . . 481
- Defining Subsystem Options . . . 481
  - Responding to the SETSSI Command . . . 481

© Copyright IBM Corp. 1988, 2013

Starting Your Subsystem Under the Primary Subsystem 481
Querying Subsystem Information. 482
Using the Subsystem Query Request of the IEFSSI Macro 482
Using the Display SSI Command 483
Maintaining Information About the Callers of Your Subsystem 483
SSAFF: Set/Obtain Subsystem Affinity 484

Chapter 6. SSI Function Codes Your Subsystem Can Support 487
SSI Function Code Descriptions 487
End-of-Task Call — SSI Function Code 4 . . . 487
End-of-Address Space (End-of-Memory) Call — SSI Function Code 8 491
WTO/WTOR Call — SSI Function Code 9. . . 495
Command Processing Call — SSI Function Code 10 511
Delete Operator Message — SSI Function Code 14 519
Help Call — SSI Function Code 48 522
Early Notification of End-of-Task Call — SSI Function Code 50 524
Request Subsystem Version Information Call — SSI Function Code 54. 528
SMF SUBPARM Option Change Call — SSI Function Code 58 535
Tape Device Selection Call — SSI Function Code 78 538

Chapter 7. Troubleshooting Errors in Your Subsystem 555
Handling Initialization Errors 555
Handling function request errors 556
Capturing the System Dump 556
Identifying the Type of Error 557
Determining the Cause of the Error 558

Chapter 8. Examples — Subsystem Interface Routines 561
Example 1 — Subsystem Initialization Routine (TSYSINIT) 561
Example 2 — Subsystem Function Routine (WRITEIT) 566
Example 3 — Subsystem Function Routine (DELETEIT) 568
Example 4 — Subsystem Function Routine (LISTEN) 569
Example 5 — Subsystem Requesting Routine (TSYSCALL). 571

Chapter 9. Using IEFJSVEC with Your Subsystem 575
Defining What Your Subsystem Can Do 575
Building the SSVT. 575
Changing What Your Subsystem Can Do 580
Enabling Your Subsystem for New Functions 580
Disabling Previously Supported Functions. . . 585

Appendix. Accessibility 591
Accessibility features 591
Using assistive technologies 591
Keyboard navigation of the user interface 591
Dotted decimal syntax diagrams 591

Notices 595
Policy for unsupported hardware. 596
Minimum supported hardware 597
Trademarks 597

Index 599

Figures

1. Processing for a directed request 2
2. Processing for a broadcast request 3
3. Making a Subsystem Request 10
4. Environment at Time of Call for SSI Function Code 1 16
5. Environment at Time of Call for SSI Function Code 11 40
6. Environment at Time of Call for SSI Function Code 15 46
7. Environment at Time of Call for SSI Function Code 20 51
8. Environment at Time of Call for SSI Function Code 21 57
9. Environment at Time of Call for SSI Function Code 54 62
10. Environment at Time of Call for SSI Function Code 70 78
11. Environment at Time of Call for SSI Function Code 71, Spool Read Subfunction 90
12. Environment at Time of Call for SSI Function Code 71, JES2 Health Monitor Information Subfunction 98
13. Environment at Time of Call for SSI Function Code 71, Job Class Information Subfunction . 111
14. Environment at Time of Call for SSI Function Code 71, Convert Device ID Service Subfunction 124
15. Environment at Time of Call for SSI Function Code 71, Checkpoint Versions Subfunction . . 130
16. Environment at Time of Call for SSI Function Code 75 138
17. Protocol for the SAPI PUT/GET Call 147
18. Control Blocks of DYNALLOC Call for SAPI-Provided Data Set 150
19. Protocol for the SAPI COUNT Call 151
20. Protocol for the SAPI BULK MODIFY Call 153
21. Environment at Time of Call for SSI Function Code 79 156
22. Environment at Time of Call for SSI Function Code 80 190
23. Environment at Time of Call for SSI Function Code 82, NJE Node Information Subfunction . 252
24. Environment at Time of Call for SSI Function Code 82, SPOOL Volume Information Subfunction 271
25. Environment at Time of Call for SSI Function Code 82, Initiator Information Subfunction. . 291
26. Environment at Time of Call for SSI Function Code 82, JESPLEX Information Subfunction . 309
27. Environment at Time of Call for SSI Function Code 82, Job Class Information Subfunction . 325
28. Environment at time of call for SSI Function Code 83, the JES device information services . 344
29. Environment at Time of Call for SSI Function Code 85 435
30. Initializing Your Subsystem 468
31. Input to the Initialization Routine. 473
32. Subsystem Affinity Service 484
33. Environment on Entry to the Function Routine for SSI Function Code 4 489
34. Environment on Entry to the Function Routine for SSI Function Code 8 493
35. Environment for a Single-line WTO in the SSWT Control Block 500
36. Environment for the First Line of a Multi-line WTO in the SSWT Control Block 503
37. Environment for Minor Lines of a Multi-line WTO in the SSWT Control Block 507
38. Environment for a WTOR in the SSWT Control Block 509
39. Environment on Entry to the Function Routine for SSI Function Code 10 513
40. Environment on Entry to the Function Routine for SSI Function Code 48 523
41. Environment on Entry to the Function Routine for SSI Function Code 50 526
42. Environment on Entry to the Function Routine for SSI Function Code 54 530
43. Environment at Time of Call for SSI Function Code 58 536
44. Environment at Time of Call for SSI Function Code 78 543
45. Continuation of Environment at Time of Call for SSI Function Code 78. 544

© Copyright IBM Corp. 1988, 2013

Tables

1. IBM-Defined Keywords 69
2. JES Job Information Services Request Types 87
3. Examples of jobs returned for SSS2JBIL when SSS2JBIH is blank 165
4. SAPI Disposition in SSS2. 169
5. Summary of output data elements based on input type requested. 187
6. Examples of jobs returned for STATJBIL when STATJBIH is blank.. 198
7. SSI Function Code 80 Filters 207
8. JES3 Unsupported Flags and Fields 240
9. Job phase text level 245
10. Job phase text level 246
11. JES Properties Request Types 250
12. SSI 85 actions, JESJOBS class entities and Required access 432
13. Examples of jobs returned for SSJMJBIL when SSJMJBIH is blank.. 446
14. SSI updating of multi-line messages 507
15. Relationship between System and User Criteria 540

© Copyright IBM Corp. 1988, 2013

About this document

This document introduces you to subsystems, what they are and why you might want to write your own. It describes how to set up your subsystem and how to use it. MVS™ provides some services to help you build and use subsystems; these services are described in this document.

In addition, this document describes services provided by IBM® subsystems that a program can use. The program need not be a subsystem to use these services.

Who should use this document

This document is for ***system programmers*** or ***application developers*** who are writing a subsystem or requesting system services available through the subsystem interface (SSI).

This document assumes that the reader has extensive experience with MVS, is familiar with its basic concepts, can code JCL statements to execute programs or cataloged procedures, can code in assembler language, and can read assembler, loader, and linkage editor output.

How to use this document

Depending upon the tasks you want to perform, the following is a guide to the chapters you can refer to.

For general information about the SSI, see Chapter 1, “Introduction to Subsystems and the Subsystem Interface (SSI),” on page 1.

If you are familiar with the SSI, and you are writing a program that uses services provided by IBM subsystems, see:
- Chapter 2, “Making a Request of a Subsystem,” on page 7
- Chapter 3, “SSI Function Codes Your Program Can Request,” on page 13.

If you are familiar with the SSI, and you are writing your own subsystem, see:
- Chapter 4, “Setting Up Your Subsystem,” on page 461
- Chapter 5, “Services for Building and Using Your Subsystem,” on page 471
- Chapter 6, “SSI Function Codes Your Subsystem Can Support,” on page 487
- Chapter 7, “Troubleshooting Errors in Your Subsystem,” on page 555.

Where to find more information

Where necessary, this document references information in other documents, using shortened versions of the document title. For complete titles and order numbers of the documents for all products that are part of z/OS, see *z/OS Information Roadmap*.

© Copyright IBM Corp. 1988, 2013

How to send your comments to IBM

We appreciate your input on this publication. Feel free to comment on the clarity, accuracy, and completeness of the information or provide any other feedback that you have.

Use one of the following methods to send your comments:

1. Send an email to mhvrcfs@us.ibm.com.
2. Send an email from the "Contact us" web page for z/OS (http://www.ibm.com/systems/z/os/zos/webqs.html).
3. Mail the comments to the following address:
   IBM Corporation
   Attention: MHVRCFS Reader Comments
   Department H6MA, Building 707
   2455 South Road
   Poughkeepsie, NY 12601-5400
   US
4. Fax the comments to us, as follows:
   From the United States and Canada: 1+845+432-9405
   From all other countries: Your international access code +1+845+432-9405

Include the following information:
- Your name and address.
- Your email address.
- Your telephone or fax number.
- The publication title and order number:
  z/OS V2R1.0 MVS Using the Subsystem Interface
  SA38-0679-01
- The topic and page number that is related to your comment.
- The text of your comment.

When you send comments to IBM, you grant IBM a nonexclusive right to use or distribute the comments in any way appropriate without incurring any obligation to you.

IBM or any other organizations use the personal information that you supply to contact you only about the issues that you submit.

If you have a technical problem

Do not use the feedback methods that are listed for sending comments. Instead, take one of the following actions:
- Contact your IBM service representative.
- Call IBM technical support.
- Visit the IBM Support Portal at z/OS support page (http://www.ibm.com/systems/z/support/).

© Copyright IBM Corp. 1988, 2013

Summary of changes

Changes made to z/OS V2R1 as updated December 2013

New

- Added JESJOBS security details to “Modify Job Function Call — SSI Function Code 85” on page 431.

Changed

None.

Deleted

None.

z/OS Version 2 Release 1 summary of changes

See the following publications for all enhancements to z/OS Version 2 Release 1 (V2R1):

- *z/OS Migration*
- *z/OS Planning for Installation*
- *z/OS Summary of Message and Interface Changes*
- *z/OS Introduction and Release Guide*

© Copyright IBM Corp. 1988, 2013

Chapter 1. Introduction to Subsystems and the Subsystem Interface (SSI)

This chapter describes basic concepts that you need to understand if you want to write your own subsystem or want to use services provided by IBM subsystems.

What is a subsystem?

A subsystem is a service provider that performs one function or many functions, but does nothing until it is requested. Although the term "subsystem" is used in other ways, in this section a subsystem must be the master subsystem or be defined to MVS in one of the following ways:

- Processing the IEFSSNxx parmlib member during IPL

  You can use either the keyword format or positional format of the IEFSSNxx parmlib member. IBM recommends that you use the keyword format, which allows you to define and dynamically manage your subsystems.
- Issuing the IEFSSI macro
- Issuing the SETSSI system command

Note that the master subsystem (MSTR) is a part of MVS and is not defined in any of these ways. The following IBM subsystems use the SSI:

- JES2
- JES3
- IMS™
- Tivoli® NetView® for z/OS®

There are two types of subsystems:

- The **primary** subsystem. The job entry subsystem that MVS uses to do work. It can be either JES2 or JES3.
- **Secondary** subsystems. Secondary subsystems provide functions as needed by IBM products, vendor products, or the installation.

MVS communicates with subsystems through the SSI.

What is the SSI?

The SSI is the interface used by routines (IBM, vendor, or installation-written) to request services of, or to pass information to, subsystems. An installation can design its own subsystem and use the SSI to monitor subsystem requests. An installation can also use the SSI to request services from IBM-supplied subsystems. The SSI acts only as a mechanism for transferring control and data between a requestor and the subsystem; it does not perform any subsystem functions itself.

Unique Attributes of the SSI

The SSI is a way for one routine to call another routine. There are a number of other ways that a routine can call another routine, such as:

- Branch and link register (BALR) 14,15
- LINK or LINKX macro
- Program call (PC)

© Copyright IBM Corp. 1988, 2013

- SVC

The SSI is different from these linkage interfaces, however, in that:

- The called routine does not have to be there. That is, when a routine calls the subsystem, the SSI checks to see if the subsystem either is not interested in the request or does not exist. The caller then receives an appropriate return code.
- A caller's request can be routed to multiple subsystem routines.

Types of subsystem requests

The SSI handles two types of requests: **directed** requests and **broadcast** requests.

Directed requests, which can be defined by the installation, are made to **one** named subsystem. For a directed request, the caller informs the named subsystem of an event, or asks the named subsystem for information. For example, you can access JES SYSOUT data sets with a directed request.

Figure 1 shows the processing for a directed request.

See Chapter 3, "SSI Function Codes Your Program Can Request," on page 13 for more information on the services available to your program using directed requests.

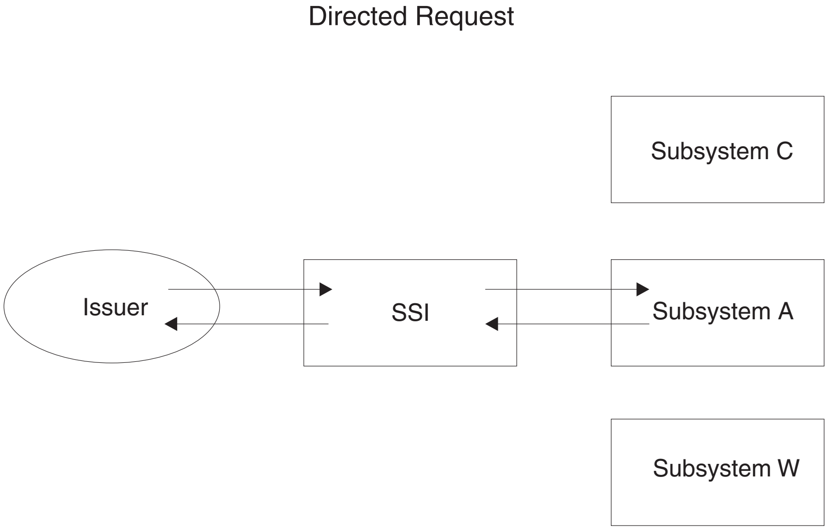

Figure 1. Processing for a directed request

Broadcast requests, which are defined by MVS, provide the ability for subsystems to be informed when certain events occur in the system. Broadcast requests differ from directed requests in that the system allows **multiple** subsystems to be informed when an event occurs. The SSI gives control to each subsystem that is active and that has expressed an interest in being informed of the event. For example, your subsystem can be informed when a WTOR message is issued in order to automate a response to the WTOR.

Figure 2 on page 3 shows the processing for a broadcast request.

See Chapter 6, "SSI Function Codes Your Subsystem Can Support," on page 487 for more information on the broadcast function codes your subsystem can support.

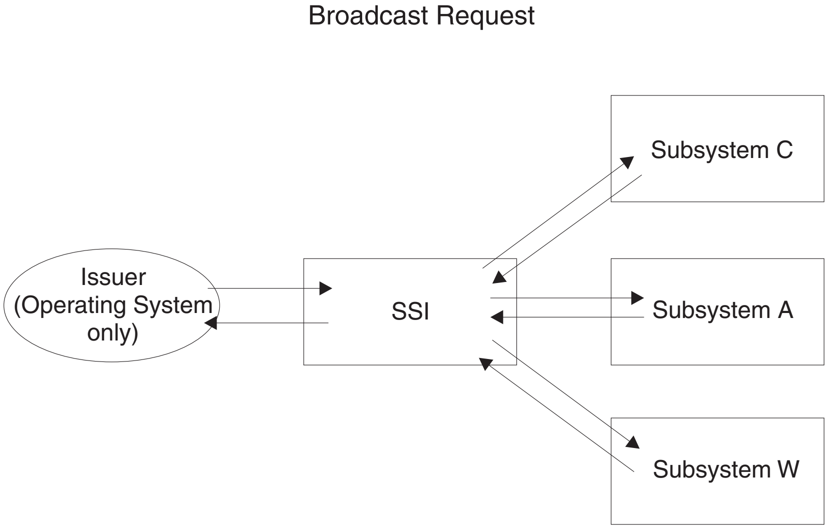

Figure 2. Processing for a broadcast request

Controlling SSI Processing

The IEFJFRQ installation exit provides a way to examine and modify subsystem function requests. See *z/OS MVS Installation Exits* for more information on the capabilities and use of the IEFJFRQ exit.

Why Write Your Own Subsystem?

You can extend the function of the operating system by writing and invoking your own subsystem.

Using a subsystem for an installation-defined function not provided by MVS requires an in-depth knowledge of procedures, problems, and goals at your installation; as well as a knowledge of MVS. You must take many things into consideration when deciding whether a subsystem is needed. Some factors to consider include:

- You might have many programs that need the same functions. If you use a subsystem to supply these functions, the request is made in terms of the function needed.
- You might want to take installation-specific action in response to certain events. If these events cause a broadcast SSI call, you can set up a subsystem to receive control at that time. However, if you choose to make a subsystem eligible for a broadcast request, your subsystem gets control on every request for that function. Thus, you must weigh the benefits of having the subsystem handle that function against the possible impact on performance.
- The requesting program can be isolated from problems involving the subsystem.
- Using subsystems to provide services allows more flexibility and compatibility. Not every change in the subsystem will require you to recompile; the interface between the requesting program and the subsystem remains the same.
- You might want to use a subsystem to set up installation requirements only at initialization time. During system initialization, control passes to the subsystem initialization routines named in parmlib member IEFSSNxx. The initialization routine establishes changes defined by the installation. In this case, the initialization routine performs the function at initialization and does not set up

separate function routines; the subsystem-provided programs that process the function identified by the function codes.

Note: Prior to z/OS V1R12, the subsystem initialization routines specified in parmlib member IEFSSNxx were invoked in the sequence they appeared and under a task that never terminated. From z/OS V1R12, the initialization routines are invoked in parallel after the BEGINPARALLEL keyword in parmlib member IEFSSNxx is processed, and no longer run under a permanent task when they are run in parallel.

You must decide whether you want to use this function of subsystems for this purpose. Consider that some of the control blocks built reside below 16 megabytes in common storage and, if your subsystem should fail, you may not be able to complete initialization of your system.

Do not use a subsystem to do the following:

- To anchor persistent control blocks. Use the Name/Token callable services instead. Subsystems that exist only to provide an anchor degrade the performance of SSI request processing. See *z/OS MVS Programming: Authorized Assembler Services Guide* for more information on the Name/Token callable services.
- To receive control for end-of-task and end-of-memory conditions. Use the RESMGR macro instead. Subsystems that exist only as resource managers degrade the performance of SSI request processing. See *z/OS MVS Programming: Authorized Assembler Services Guide* for more information on the RESMGR macro.

If you decide that you need a subsystem, see Chapter 4, "Setting Up Your Subsystem," on page 461 for the information necessary to accomplish that task.

What is a Dynamic Subsystem?

Dynamic subsystems are those subsystems that can be defined in one of the following ways:

- Processing the keyword format IEFSSNxx parmlib member during IPL
- Issuing the IEFSSI macro
- Issuing the SETSSI system command.

Subsystems have the choice of being dynamic. Subsystems that are not dynamic can be defined only at IPL using the positional form of the IEFSSNxx parmlib member, in which case, they cannot use dynamic SSI services.

In addition to its role in communicating with subsystems, the SSI provides a set of authorized system services that are available only to dynamic subsystems that installations, applications and subsystems can invoke to:

- Define (add) a new subsystem dynamically (without requiring an IPL)
- Activate a subsystem that is already defined
- Deactivate a subsystem that is already defined
- Store and retrieve subsystem-dependent information
- Define subsystem options, which include deciding:
  - If a subsystem can respond to the SSI commands
  - Which subsystem a subsystem should start under.
- Query subsystem information
- Define and modify the response of a subsystem to function requests.

Defining or adding a subsystem is primarily a way of making the subsystem's unique name known to the system. A subsystem is active when it is ready to process requests that the SSI directs to it. To deactivate a subsystem, the subsystem informs the SSI that it is no longer accepting requests. For example, a subsystem may request that it be deactivated to update the list of function requests that it supports, or to respond to a problem.

The dynamic SSI services reject any requests to manipulate subsystems that were not defined dynamically.

The services that allow installations, applications and subsystems to define and modify the response of a subsystem to function requests replace and enhance the existing IEFJSVEC service. You can still use the existing IEFJSVEC service, which is described in Chapter 9, “Using IEFJSVEC with Your Subsystem,” on page 575, however IBM recommends that you use the services described in Chapter 5, “Services for Building and Using Your Subsystem,” on page 471 instead of IEFJSVEC. These services provide an easier way to define or change the functional response of a subsystem.

Chapter 2. Making a Request of a Subsystem

This chapter describes how to use the SSI to make a request of a subsystem. The subsystem may either be an installation-defined subsystem, a vendor-supplied subsystem, or a subsystem provided by IBM. See Chapter 3, "SSI Function Codes Your Program Can Request," on page 13 for the list of the functions that can be requested of IBM subsystems.

To request a function of a subsystem, do the following:

1. Set up the environment needed to make the request.
2. Make the request with the IEFSSREQ macro.
3. Check the information returned from both the SSI and the subsystem and take the appropriate action.

Set Up the Environment

With exceptions, your requesting program must be in the same state (problem or supervisor) as the subsystem. For IBM-supplied functions, see the specific function code descriptions in Chapter 3, "SSI Function Codes Your Program Can Request," on page 13 for information on the environmental requirements that must be met. The SSI supports address mode (AMODE) switching. Your program must include mapping macros for the CVT and the JESCT control blocks.

Note that the IEFSSREQ macro uses the JESSSREQ field in the JESCT control block to locate the SSI routing routine.

You must tell the SSI the function you are requesting and the subsystem with which you want to communicate. You make a request by obtaining storage for the following control blocks:

- SSOB
- SSOB function dependent area (if required)
- SSIB.

These control blocks, and your program's save area, must reside in an area addressable by the called subsystem's function routine.

Subsystem Options Block (SSOB)

The subsystem options block (SSOB) identifies the function that you are requesting. The SSOB consists of a 28-byte header that you must fill in for every call to a subsystem through the SSI. The SSOB is the parameter list for the IEFSSREQ macro.

Function codes are the way a caller identifies the service or processing requested of a subsystem. You specify a function code by placing the appropriate code in the SSOBFUNC field. Another important field is SSOBRTRY. In the case of an abend, this flag determines whether the directed function recovery routine will percolate or retry. IBM recommends that you set this flag. Setting this flag will cause the SSI to attempt to resume processing if it fails. If the flag is not set, the SSI will percolate by default.

Use the IEFSSOBH mapping macro to build the SSOB header.

© Copyright IBM Corp. 1988, 2013

SSOB Function Dependent Area

In addition to the SSOB, the specific function you invoke might require additional information, which can be passed in a function dependent area identified in the SSOB. You specify which SSOB function dependent area that you want to use by setting the SSOBINDV field in the SSOB to the address of the SSOB function dependent area.

The mapping macro used to map the SSOB function dependent area varies based on the specific function you invoke.

Subsystem Identification Block (SSIB)

The subsystem identification block (SSIB) identifies the particular subsystem to which a request is being directed. Your program can provide an SSIB or can use an SSIB provided by the system.

A **life-of-job SSIB** is an SSIB that is automatically provided by the system. The subsystem name specified in the life-of-job SSIB is the name of the subsystem that initiated the currently running job, started task, or TSO/E user. This is usually the primary JES, but could be:

- An alternate JES2
- The master subsystem

If your program does not create an SSIB, it must set the address of the SSIB in the SSOB (SSOBSSIB) to zero. This setting tells the system to use the life-of-job SSIB.

Before you make an SSI request you need to evaluate whether the subsystem name provided by the system in the life-of-job SSIB is the correct subsystem for the function you are requesting. The system provides the subsystem name in the life-of-job SSIB, based on whether the unit of work is a batch job (including a WLM-initiated job), a started task, or a time-sharing LOGON as follows:

- Batch jobs

  A batch job is initiated under the JES that selects the job, that is, either the primary or alternate JES. In a JES initiator, the initiator's life-of-job SSIB contains the JES subsystem name. In a WLM initiator, the initiator's life-of-job SSIB contains the master subsystem name. The SMF exits IEFACTRT, IEFUJI, IEFUSI, and IEFUTL receive control in the initiator's environment with the initiator's life-of-job SSIB active. If your SMF exit makes an SSI request that depends on JES, it will not be successful in a WLM initiator.
- Started tasks

  If a START command with the SUB= parameter is specified, the started task is initiated under the subsystem name specified on the SUB= parameter. This is also the subsystem name in the life-of-job SSIB.

  If you specify SUB=MSTR, the master subsystem starts the job even if it is not a subsystem. To do this, however you must meet the requirements of the master subsystem. See *z/OS MVS JCL Reference* for considerations when running a started task under the master subsystem.

  If a START command (without the SUB= parameter) is specified, and is for a started task with the same name as a subsystem that is capable of being a job entry subsystem (JES), the started task is initiated under the master subsystem. The subsystem name in the life-of-job SSIB is MSTR.

  If a START command (without the SUB= parameter) is specified and is for a started task with the same name as a subsystem that is not capable of being a job entry subsystem (JES), the started task is initiated under the primary JES subsystem. The subsystem name in the life-of-job SSIB is the primary JES subsystem name.

If a START command (without the SUB= parameter) is specified and is for a started task with a name that is not the name of a subsystem, the started task is initiated under the primary JES subsystem. The subsystem name in the life-of-job SSIB is the primary JES subsystem name.

- TSO/E users

  For TSO/E users, the LOGON is initiated under the primary JES. The subsystem name in the life-of-job SSIB is the primary subsystem name.

If the subsystem name provided in the life-of-job SSIB is not the correct subsystem name based on the function you want to invoke, your program must provide an SSIB. See Chapter 3, “SSI Function Codes Your Program Can Request,” on page 13 for the subsystem name that must be specified when making requests for functions provided by IBM subsystems.

To create an SSIB, your program can use the following procedure:

1. Map the format of the SSIB with the IEFJSSIB mapping macro.
2. Clear the fields in the SSIB to binary zeros.
3. Set the SSIBID and SSIBLEN fields to the appropriate values.
4. Set the SSIBSSNM field to the name of the subsystem. (If the subsystem name is less than 4 characters, specify it left-justified and padded to the right with blanks.)
5. Set the SSIBJBID field if required.
6. Set the SSIBSUSE field if required.

   Note: The SSI request (defined by IBM, a vendor, or the installation) may require your program to set the SSIBSUSE field. That field is available for the subsystem to use for an SSIB that a program provides in response to the SSI request. A subsystem (whether defined by a vendor or the installation) must not use the SSIBSUSE field in the life-of-job SSIB.
7. Store the address of the SSIB in the SSOBSSIB field of the SSOB.

Make the Request with the IEFSSREQ Macro

When you have set up the environment and built the necessary control blocks, you are ready to issue the IEFSSREQ macro to make the request. There are no parameters on the IEFSSREQ macro; the SSOB, SSOB function dependent area (if provided), and SSIB provide the information the SSI and the subsystem need to perform their function.

Input Register Information

Before issuing the IEFSSREQ macro, the caller must ensure that the following registers contain the specified information:

Register	Contents
1	Address of a one-word parameter list that has the high-order bit on and a pointer to the SSOB control block in the low-order 31 bits.
13	Address of a standard 18-word save area.

Syntax of IEFSSREQ

The syntax of the IEFSSREQ macro is:

```
[symbol]                IEFSSREQ
```

where *symbol* is any valid assembler language symbol. Note that one or more blanks are required before and after IEFSSREQ.

Figure 3 shows the environment when you make a subsystem request.

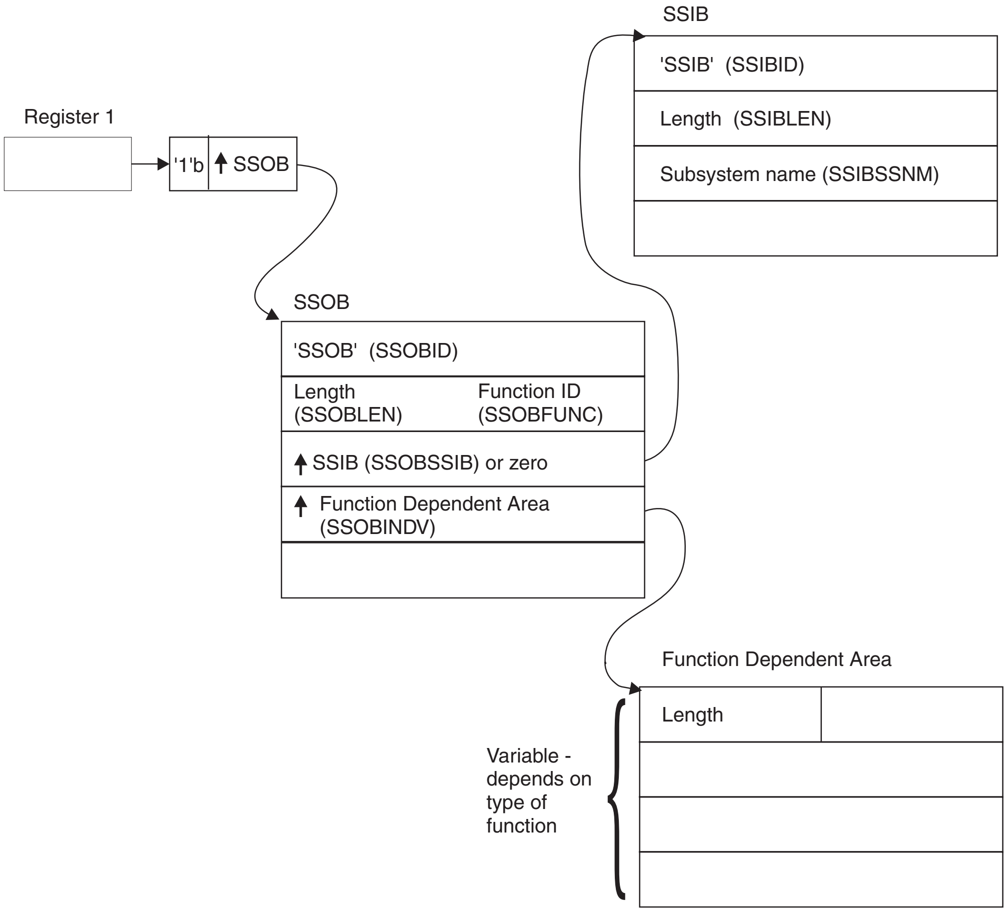
SSIB
'SSIB' (SSIBID)
Length (SSIBLEN)
Subsystem name (SSIBSSNM)
Register 1
'1'b
↑ SSOB
SSOB
'SSOB' (SSOBID)
Length (SSOBLEN)
Function ID (SSOBFUNC)
↑ SSIB (SSOBSSIB) or zero
↑ Function Dependent Area (SSOBINDV)
Function Dependent Area
Length
Variable - depends on type of function

Figure 3. Making a Subsystem Request

Check the Return Code

For a directed subsystem request, the SSI returns one of the following decimal return codes in register 15:

Return Code

(Decimal)
Meaning

SSRTOK (0)
Successful completion — the request went to the subsystem.

SSRTNSUP (4)
The subsystem does not support this function.

SSRTNTUP (8)
The subsystem exists, but is not active.

SSRTNOSS (12)
The subsystem is not defined to MVS.

SSRTDIST (16)
The pointer to the SSOB control block or the SSIB control block is not valid, or the function code specified in the SSOBFUNC field is greater than the maximum number of functions supported by the subsystem specified in the SSIBSSNM field.

SSRTLERR (20)
The SSOB or SSIB have invalid lengths or formats

SSRTNSSI (24)
The SSI has not been initialized.

If the return code in register 15 is zero, the SSI was able to pass the request to the subsystem, and the SSOB function dependent area might contain information returned by the subsystem. The contents of the return code in the SSOB (SSOBRETN), and other fields, depend on which function you requested.

Summary of Steps

When issuing the IEFSSREQ macro you can follow these steps:

1. Set up the environment:
   - Obtain storage for control blocks
   - Set up register 1 and 13 (Note that the save area must be accessible to the function routine.)
   - Initialize the SSOB
   - Initialize the SSOB function dependent area (if required)
   - Initialize the SSIB (if necessary)
   - Enter supervisor state (if necessary)
2. Make the request:
   - Invoke IEFSSREQ
   - Return to problem state (if necessary)
3. Check the return codes:
   - Check the SSI return code in register 15 and the subsystem return code in SSOBRETN, and take appropriate action.
   - Free the storage.

Example 5 in Chapter 8, “Examples — Subsystem Interface Routines,” on page 561 shows a coding example of a routine making a request of a subsystem.

Chapter 3. SSI Function Codes Your Program Can Request

This chapter contains detailed information on the directed function codes that your program can request. IBM subsystems provide these function codes.* The following table lists each supported SSI function code, its function, the subsystems that support the function and the type of subsystem request.

Attention: Your program can request ONLY the following SSI function codes:

Function Code	Requested Function	Subsystem*	Type of Request
1	Process SYSOUT data sets	JES2/JES3	Directed
11	User Destination Validation/Conversion	JES2/JES3	Directed
15	Verify subsystem function	Master	Directed
20	Request job ID	JES2/JES3	Directed
21	Return job ID	JES2/JES3	Directed
54	Request subsystem version information	JES2/JES3/Master	Directed
70	Scheduler Facilities services	JES2/JES3	Directed
71	JES JOB information	JES2	Directed
75	Notify user message service	JES2/JES3	Directed
79	SYSOUT Application Program Interface (SAPI)	JES2/JES3	Directed
80	Extended Status Function Call	JES2/JES3	Directed, Broadcast
82	JES Properties	JES2/JES3	Directed
83	JES Device information services	JES2/JES3	Directed
85	Modify job	JES2	Directed

*Not all supported levels of the IBM subsystems support all the function codes available with the current release of z/OS.

Your program need not be a subsystem to use these function codes. In addition to the SSI function codes provided by the operating system, installations can also define and use their own function codes, using the range 236 to 255. You can design your own directed requests for these function codes.

SSI Function Code Descriptions

Your program can use several SSI function codes when coding for an MVS-JES2/JES3 environment. This section contains detailed descriptions of the SSI function codes listed at the beginning of this chapter.

See example 5 in Chapter 8, “Examples — Subsystem Interface Routines,” on page 561 for a coding example of a routine making a request of a subsystem.

© Copyright IBM Corp. 1988, 2013

Process SYSOUT Data Sets Call — SSI Function Code 1

The Process SYSOUT Data Sets call (SSI function code 1) allows a user-supplied program to access JES SYSOUT data sets independently from the normal functions (such as print, network) JES provides, so that the characteristics of the SYSOUT data sets can be either retrieved or updated. The program using this interface is called an external writer. It operates in an address space external to JES, generally for requesting and printing JES-managed SYSOUT data sets that reside on spool.

Retrieval Attributes: For both JES2 and JES3, the program can select SYSOUT data sets for retrieval purposes according to a variety of different selection attributes, such as the form name or SYSOUT class. Both JES2 and JES3 can either keep or delete the retrieved data set.

Update Attributes: For JES3 only, the program can select SYSOUT data sets for update purposes according to a variety of different selection attributes, such as the destination or SYSOUT class. The program can even delete data sets from the JES spool.

Type of Request

Directed SSI call.

Use Information

The caller of the SSI function code 1 is the external writer. See “External Writer Considerations” on page 30 for detailed information on the definition of a standard external writer. See also *z/OS JES Application Programming* for more information on the external writer.

The external writer uses SSI function code 1 to retrieve (JES2 and JES3) and update (JES3 only) JES-managed SYSOUT data sets, allowing the writer to perform processing that JES does not provide.

For example, while JES provides the ability to print locally on a variety of printers, JES does not provide direct support for all forms of devices, such as microfiche printers. SSI function code 1 allows other programs to select SYSOUT from JES, and thus process it with their own devices.

Additionally, the function exists for these programs to perform disposition processing on the SYSOUT data set according to program control. For example, after reading the SYSOUT data set to a microfiche printer, the program may tell JES to do one of the following:

- Delete the data set
- Hold the data set for additional processing
- Reroute the data set to a different local or remote destination.

Before using the process SYSOUT data sets call, investigate using the functional system interface (FSI) as an alternative. The FSI also provides facilities for selection of SYSOUT work destined to an outside address space. See *z/OS MVS Using the Functional Subsystem Interface* for more information on the FSI.

Issued to

JES2 or JES3.

Related SSI Codes

None.

Related Concepts

You should know how to use:

- Dynamic allocation (DYNALLOC) services to allocate/deallocate the JES-supplied data set.
- Sequential access method (SAM) to read the allocated SYSOUT data set and properly handle the process SYSOUT interface.
- Other standard MVS services, such as WAIT and POST logic.

Environment

Your external writer must include the following mapping macros:

- CVT
- IEFJESCT

Data areas commonly referenced are mapped by the following mapping macros. IBM recommends you include them in your program:

- IEFSSOBH
- IEFJSSIB
- IEFSSSO (with SOEXT=YES specified)

  Note: Specifying SOEXT=YES generates the 'long' form of the IEFSSSO with the PSO extension.

Your external writer must meet the following requirements:

External writer variable	External writer value
Minimum Authorization	Supervisor state
Dispatchable unit mode	Task
AMODE	24-bit or 31-bit
Cross memory mode	PASN=HASN=SASN
ASC mode	Primary
Interrupt status	Enabled for I/O and external interrupts
Locks	No locks held
Control Parameters	The SSOB and SSSO control blocks can reside in storage above 16 megabytes.
Recovery	The external writer should provide an ESTAE-type recovery environment. See *z/OS MVS Programming: Authorized Assembler Services Guide* for more information on an ESTAE-type recovery environment.

Figure 4 on page 16 shows the environment at the time of the call for SSI function code 1.

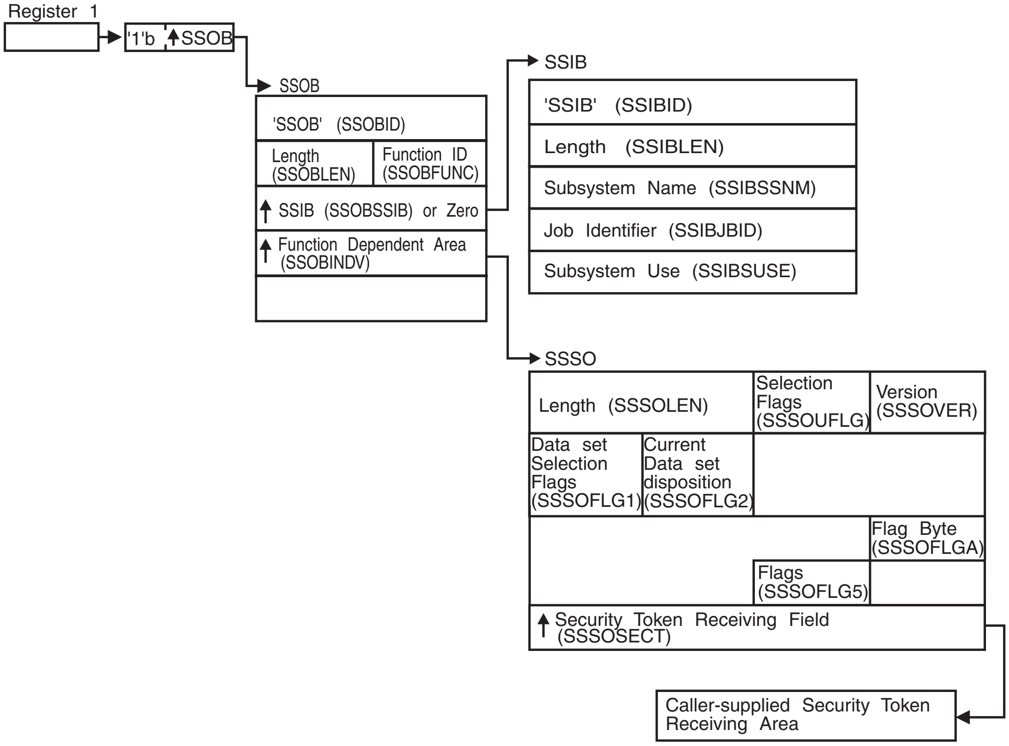
Register 1
'1'b
SSOB
SSOB
'SSOB' (SSOBID)
Length (SSOBLEN)
Function ID (SSOBFUNC)
SSIB (SSOBSSIB) or Zero
Function Dependent Area (SSOBINDV)
SSIB
'SSIB' (SSIBID)
Length (SSIBLEN)
Subsystem Name (SSIBSSNM)
Job Identifier (SSIBJBID)
Subsystem Use (SSIBSUSE)
SSSO
Length (SSSOLEN)
Selection Flags (SSSOUFLG)
Version (SSSOVER)
Data set Selection Flags (SSSOFLG1)
Current Data set disposition (SSSOFLG2)
Flag Byte (SSSOFLGA)
Flags (SSSOFLG5)
Security Token Receiving Field (SSSOSECT)
Caller-supplied Security Token Receiving Area

Figure 4. Environment at Time of Call for SSI Function Code 1

Input Register Information

Before issuing the IEFSSREQ macro, your external writer must ensure that the following general purpose registers contain:

Register	**Contents**
1	Address of a 1-word parameter list that has the high-order bit on and a pointer to the SSOB control block in the low-order 31 bits.
13	Address of a standard 18-word save area.

Input Parameters

Input parameters for the function routine are:

- SSOB
- SSIB
- SSSO

SSOB Contents: Your external writer sets the following fields in the SSOB control block on input:

Field Name	**Description**
SSOBID	Identifier 'SSOB'
SSOBLEN	Length of the SSOB (SSOBHSIZ) control block

SSOBFUNC
SSI function code 1 (SSOBSOUT)

SSOBSSIB
Address of an SSIB control block or zero (if this field is zero, the life-of-job SSIB is used.) See “Subsystem Identification Block (SSIB)” on page 8 for more information about the life-of-job SSIB.

SSOBINDV
Address of the function dependent area (SSSO control block)

Set all other fields in the SSOB control block to binary zeros before issuing the IEFSSREQ macro.

SSIB Contents: If you don't use the life-of-job SSIB, your external writer must provide an SSIB and set the following fields in the SSIB control block on input:

Field Name
Description

SSIBID
Identifier 'SSIB'

SSIBLEN
Length of the SSIB (SSIBSIZE) control block

SSIBSSNM
Subsystem name — name of the subsystem to which this Process SYSOUT Data Sets call is directed. It is usually the primary JES, or in the case of JES2, a possible secondary JES.

If your routine has not been initiated from such a JES, your external writer must issue a Request Job ID call (SSI function code 20) prior to this Process SYSOUT Data Sets call. You must use the same subsystem name in this SSIBSSNM field as you used for the Request Job ID call.

SSIBJBID
Job identifier — the job ID that was returned upon completion of the Request Job ID call (SSI function code 20).

SSIBSUSE
(JES3 only) Subsystem use — the SSIBSUSE value that was returned upon completion of the Request Job ID call (SSI function code 20).

Your external writer must set all other fields in the SSIB control block to binary zeros before issuing the IEFSSREQ macro.

SSSO Contents: Your external writer sets the following fields in the SSSO control block on input:

Field Name
Description

SSSOLEN
Length of the SSSO control block—set with SSSOSIZE value.

SSSOUFLG
User Selection Flags—defines the operation this call performs.

The following options are available:

Flag Value is X'00': Setting this flag to zero indicates an initial request. Upon issuing the IEFSSREQ service for the SSI function code 1, your external writer should ensure this field is zero. When the SSSOCTRL bit (in flag byte SSSOFLG2) is zero, JES provides the name of the next data set to be allocated.

Flag Value is nonzero: Setting this flag to nonzero indicates that the caller performs immediate disposition processing on all data sets matching the other selection criteria (including the data set specified in the SSSODSN field). If your external writer has dynamically allocated a single data set, however, the following updates described through the bit settings should be performed through the appropriate dynamic text unit keys only. See "Processing Flow for Single Data Set Requests" on page 29 for more information on performing disposition processing on single data sets.

Your external writer can use one or more of the following bit settings when performing disposition processing on multiple data sets only:

- **SSSOSETC —** Change the SYSOUT class to the value specified in the SSSOCLAS field.

  This is only valid for JES3 update requests for the selected data sets on the JES3 HOLD queue.

  Bit SSSORLSE might be used concurrently to move the data set from the HOLD queue to the WRITER queue. Information associated with this SYSOUT class is also updated with the JES3 defaults if that SYSOUT class was defined to JES3.
- **SSSODELC —** Delete the selected data sets.

  This is only valid for JES3 update requests that have data sets on the WRITER or HOLD queue.
- **SSSOROUT —** Change the destination of the selected data sets to the value specified in the SSSODEST field.

  This is only valid for JES3 update requests, and for the selected data sets on the JES3 HOLD queue.

  The SSSORLSE bit might be used concurrently to move the data set from the HOLD queue to the WRITER queue.
- **SSSOHOLD —** Hold all selected data sets.

  Neither JES2 nor JES3 honors this bit.
- **SSSORLSE —** Release all selected data sets that are eligible for printing or further processing by JES3.

  This is only valid for JES3 update requests, and for the selected data sets on the JES3 HOLD queue.

  Bits SSSOSETC and SSSOROUT might also be issued concurrently.

SSSOVER

Version Number — the current version number. Set with the value of SSSOCVER.

SSSOFLG1

Data set selection flags — determines the data sets the caller wants.

Your external writer can set one or more of the following selection bits:

- **SSSOHLD —** Use HELD data sets in the selection criteria.

  For JES2, do not set this bit. Your external writer selects work for JES2 only if that work is on the OUTPUT queue with an OUTDISP of WRITE or KEEP.

  For JES3, setting this bit allows the external writer to process work from either:

  - JES3 WRITER queue only (if SSSOHLD is off)
  - JES3 WRITER and HOLD queues (HOLD=EXTWTR only) if SSSOHLD is on.

  To ensure your external writer selects work from only the HOLD queue, select a specific SYSOUT class assigned to HOLD=EXTWTR, or the WRITER name (which creates data sets queued only to the HOLD queue). This way work destined for JES3 writers on the OUTPUT queue will not be accidentally allocated or processed.

- **SSSOSCLS —** Use SYSOUT class in a selection criterion.

  Your external writer can set up to eight specific SYSOUT (1-character EBCDIC values A-Z, 0-9) classes in the SSSOCLSL field. These classes are:

  - Selected in priority order
  - Left-justified, and padded to the right with blank (X'40') characters in the SSSOCLSL field.

- **SSSODST —** Use the remote destination in a selection criterion.

  Your external writer specifies the destination in the SSSODEST field.

- **SSSOSDST —** An alternative way for the external writer to specify SSSODST, and has the same equated value as SSSODST.
- **SSSOSJBN —** Use the job name as a selection criterion.

  Your external writer specifies the job name in the SSSOJOBN field.

- **SSSOSJBI —** Use the job ID as a selection criterion.

  Your external writer specifies the job ID in the SSSOJOBI field.

- **SSSOSPGM —** Use the external writer name (the second positional parameter in the SYSOUT= keyword on the DD JCL statement), or user ID as a selection criterion. Either value (depending on the bit setting for either SSSOWTRN or SSSOUSER) is stored in the SSSOPGMN field.
- **SSSOSFRM —** Use the form name as a selection criterion.

  Set selection bit SSSOSFRM. When using 8-character forms, also set selection bit SSSOSFR8.

  1. 4-character form name

     Use the 4-character form name field (SSSOFORM), and set the SSSOSFRM bit. Do not set the 8-character selection bit (SSSOSFR8).

  2. 8-character form name

     Use the 8-character form name field (SSSOFOR8), and set both the SSSOSFRM and SSSOSFR8 bits. If using an 8-character form, place the name of the form in the SSSOFOR8 field, and not in the SSSOFORM field.

- **SSSOSFR8 —** Use the 8-character form name field (SSSOFOR8) as a selection criterion. Make sure that you do not use the 4-character form name field (SSSOFORM). JES ignores the SSSOFORM field.

  If your external writer sets the this bit, the SSSOSFRM bit must also be set to indicate selection by either 4-character or 8-character forms.

SSSOFLG2

Flag byte

Your external writer can set one or more of the following selection bits:

- **SSSOCTRL —** Processing Completion Flag

If your external writer sets this bit off, it performs a retrieval request. The next data set name (if selectable by JES) to be processed is returned in the SSSODSN field.

If your external writer sets this bit on, it has made the last call to JES. Your external writer should only set the SSSOCTRL bit on when ending its address space, so that performance will not be negatively affected by the disassociating of resources (collected by your external writer) in the JES address space. This can include such resources as storage, and queues of control blocks.

For JES3, your external writer can issue this final IEFSSREQ call only when the SSSOCTRL bit is set on, and when the external writer is ending.

- **SSSOPSEE —** Process SYSOUT extension

  Your external writer sets this bit on if SOEXT=YES was specified on the IEFSSSO macro invocation to indicate that additional fields exist in the IEFSSSO.

  For example, the DDNAME version (proc step name, step name, dd name) of the returned data set is in a field in the process SYSOUT extension.

SSSOJOBN
Job name for a retrieval request.

Your external writer:

- Sets the value of the specific job name in the SSSOJOBN field left-justified, and padded to the right with blank (X'40') characters.
- Sets the SSSOSJBN bit for this selection to occur.

SSSOJOBI
Job ID for a retrieval request.

Your external writer:

- Sets the value of the specific job ID in the SSSOJOBI field left-justified, and padded to the right with blank (X'40') characters. Examples of valid job IDs are:
  - 'JOB12345'
  - 'STC12345' or 'TSU01234' (in JES2).
- Sets the SSSOSJBI bit for this selection to occur.

SSSOCLAS
(JES3 only) Single character SYSOUT class that the output data sets must be changed to during an update request.

Your external writer sets the SSSOSETC bit for modification to occur.

SSSOFLGA
Flag byte containing the SSSOUSER and SSSOWTRN bits.

Your external writer can set either the SSSOUSER bit (user ID), or the SSSOWTRN bit (writer name), but not both.

If your external writer sets the SSSOUSER bit, the value contained in the SSSOPGMN field is a user ID. Setting the SSSOUSER bit for user ID selection allows your external writer to access the data set if both:

- A data set resource profile in the security product (RACF®) does not exist to protect it.

- The JESSPOOL security class is active. For information on the JESSPOOL security class, see *z/OS Security Server RACF Security Administrator's Guide*.

If your external writer sets the SSSOWTRN bit, the value contained in the SSSOPGMN field is a writer name. Setting the SSSOWTRN bit for writer name selection allows your external writer to access the data set if both:

- A data set resource profile in the security product (RACF) exists.
- The JESSPOOL security class is active.

Your external writer must set the SSSOSPGM flag bit even if the SSSOUSER or SSSOWTRN bit is set, so that the SSSOPGMN field can be used as a selection criterion.

Note, for JES2 external writers that have the SSSOSPGM bit set on but have not set the SSSOUSER bit or the SSSOWTRN bit, and have set the SSSOPGMN field to all blank (X'40') characters, JES2 returns only the data sets whose user ID and writer name are both filled with blank (X'40') characters.

SSSODEST

Destination selected for either a retrieval request or an update request.

For a retrieval request, your external writer:

- Sets the value of the specific destination in the SSSODEST field left-justified, and padded to the right with blank (X'40') characters.
- Sets the SSSODST bit (or SSSOSDST) for this selection to occur.

For an update request (JES3 only), your external writer:

- Sets the value of the specific destination in the SSSODEST field left-justified, and padded to the right with blank (X'40') characters.
- Sets the SSSOROUT bit for this selection to occur.

SSSOPGMN

Name selected for a retrieval request.

If your external writer set the SSSOWTRN bit in the SSSOFLGA flag byte, this field contains the writer name. Do not use 'NJERDR', 'INTRDR' or 'STDWTR' as the writer name.

If your external writer set the SSSOUSER bit in the SSSOFLGA flag byte, this field contains the user ID.

Your external writer:

- Sets the value of the specific writer name or user ID in the SSSOPGMN field left-justified, and padded to the right with blank (X'40') characters.
- Sets the SSSOSPGM field for this selection to occur.

Note, for JES2 external writers that have the SSSOSPGM bit set on but have not set the SSSOWTRN bit or the SSSOUSER bit, and have set the SSSOPGMN field to all blank (X'40') characters, JES2 returns only the data sets whose writer name and user ID are both filled with blank (X'40') characters.

SSSODSN

Data set name

For the initial retrieval request, your external writer sets this field to binary zeros. JES returns the name of a SYSOUT data set in this SSSODSN field.

In a subsequent dynamic allocation, your external writer uses the name of this data set for processing purposes. See “Processing Flow for Single Data Set Requests” on page 29 for more information on this field.

During dynamic unallocation for a single returned data set, operations, such as changing the destination and releasing the data set to print, are performed by using the appropriate dynamic unallocation text unit keys.

For subsequent retrieval requests, your external writer must not change the SSSODSN field.

For an update request (JES3 only, when the SSSOUFLG bit is non-zero and the SSSODSN field is zero), the attributes will be changed for all data sets matching the other selection criteria specified.

SSSOFORM
Form selected (4-character specification) for a retrieval request.

Your external writer:

- Sets the value of the form name in the SSSOFORM field left-justified and padded to the right with blank (X'40') characters.
- Sets the SSSOSFRM bit for this selection to occur.

  If the SSSOSFR8 bit is also set, specify the 8-character form name in the SSSOFOR8 field, and this SSSOFORM field is not used.

  If the SSSOSFR8 bit is set, specify the form name in the SSSOFOR8 field, even if the form name is less than 4 characters.

SSSOCLSL
SYSOUT class selected for a retrieval request.

Your external writer must also set the SSSOSCLS bit.

This list can contain one to eight SYSOUT classes as a selection criteria. JES processes the list from left to right, so that, if JES finds no data sets using the first character in the list and your external writer specified more than one class, JES searches the next SYSOUT class (if present).

For JES3 only, each new SYSOUT class character causes JES to restart the queue search process. Therefore, for performance considerations, place the most used SYSOUT classes in the front of the list.

SSSOWTRC
Pointer to writer communications area.

For the initial retrieval request, your external writer sets this field to binary zeros. For JES3 only, for subsequent requests, your external writer must not change the SSSOWTRC field.

The fields that follow from the SSSOFLG5 field through the SSSOFOR8 field are available as input fields only when you specify SOEXT=YES on the IEFSSSO invocation. IBM recommends that you specify SOEXT=YES on the IEFSSSO invocation, as additional information is returned to the external writer.

Field Name
Description

SSSOFLG5
Flag byte

Your external writer can set one or more of the following selection bits:

- **SSSOTKNR —** Security token length and security token version information set.

This bit determines whether the caller has supplied the security token length and security token version information in the field pointed to by SSSOSECT. JES provides the security token of the returned data set (mapped to the requested version and length) upon return from the retrieval request. See *z/OS Security Server RACROUTE Macro Reference* for more information.

SSSOSECT

| Address of a caller-supplied area in which the security token is returned.

If the SSSOTKNR bit has also been set, your external writer must also provide the length and version of the token that is returned at the address specified in the SSSOSECT field. JES returns the security token in the format specified. See the SSSOTKNR bit and the SSSOTKNG bit on output for additional information.

If the SSSOTKNR bit has also been set off:

- The returned token is at the current level of the security authorization facility (SAF) security tokens
- The external writer is responsible for providing enough storage for the transfer to be made.

SSSOFOR8

8-character form name selected

Your external writer must have set both the SSSOSFRM and SSSOSFR8 bits for this selection to occur.

This field contains an 8-character form name that is left-justified and padded to the right with blank (X'40') characters.

If the SSSOSFR8 bit is also set, the 4-character form name in SSSOFORM is ignored. JES uses the name in the SSSOFOR8 field as the forms selection criteria.

Your external writer must set all other fields in the SSSO control block to binary zeros before issuing the IEFSSREQ macro.

Output Register Information

When control returns to your external writer, the general purpose registers contain:

Register	**Contents**
0	Used as a work register by the system
1	Address of the SSOB control block
2 — 13	Same as on entry to call
14	Return address
15	Return code

Return Code Information

The SSI places one of the following decimal return codes in register 15. Examine the return code to determine if the request was processed.

Return Code (Decimal)

Meaning

SSRTOK (0)
The Process SYSOUT Data Sets call completed. Check the SSOBRETN field for specific function information.

SSRTNSUP (4)
The subsystem specified in the SSIBSSNM field does not support this function.

SSRTNTUP (8)
The subsystem specified in the SSIBSSNM field exists, but it is not active.

SSRTNOSS (12)
The subsystem specified in the SSIBSSNM field is not defined to MVS.

SSRTDIST (16)
The pointer to the SSOB control block or the SSIB control block is not valid, or the function code specified in the SSOBFUNC field is greater than the maximum number of functions supported by the subsystem specified in the SSIBSSNM field.

SSRTLERR (20)
Either the SSIB control block or the SSOB control block has incorrect lengths or formats.

SSRTNSSI(24)
The SSI has not been initialized.

Output Parameters

Output parameters for the function routine are:

- SSOBRETN
- SSSO

SSOBRETN Contents: When control returns to your external writer and register 15 contains a zero, the SSOBRETN field contains one of the following decimal values:

Value (Decimal)
Meaning

SSSORTOK (0)
Successful completion.

SSSOEODS (4)
There are no more data sets to select with the requested selection criteria.

Your external writer has the following options:

- Wait until new work becomes available.

  See “The Writer Communication Area” on page 32 for information about the ECB that will be posted when work is available. In JES2, this POST only occurs for those external writers that are running as started tasks, and not batch jobs.
- Modify the criteria for new work.

  Your external writer may modify some of the entry criteria (for example, change the form number) to indicate a new selection, and initiate the IEFSSREQ process. Do not issue an IEFSSREQ with the SSSOCTRL bit set when the work is for a different set of characteristics.
- Perform job-level (update) disposition (JES3 only).

  For example, your function may have been leaving data sets on the spool until all the data sets from the job have been completely and successfully processed. Now, the external writer can perform a job-level disposition of delete with a subsequent IEFSSREQ call specifying the job ID.

- End current activity.

  Issue a final IEFSSREQ with the SSSOCTRL bit set. This completely disassociates the external writer from the JES. Perform this final call only when your external writer is ready to end the operation.

SSSONJOB (8)
Job not found.

You specified the job name as a selection criterion, but the job name specified in the SSSOJOBN field did not match any job in the system.

SSSOINVA (12)
Invalid search argument.

The job ID specified in the SSSOJOBI field failed syntactical parsing, or both the SSSOWTRN bit and the SSSOUSER bit had also been set in the SSSOFLGA flag byte.

SSSODUPJ (20)
Duplicate job names

During a retrieval request, more than one job was found matching the name in the SSSOJOBN field. A job ID should be specified as a selection criteria to uniquely identify the job.

SSSOINVJ (24)
Invalid job name/job ID combination

During a retrieval request, a job name and job ID were specified as selection criteria, but the job name is not associated with the job ID that the external writer supplied.

SSSOIDST (28)
Invalid destination specified in field SSSODEST.

The return code information depends on which JES is being used:

JES2: The supplied destination did not exist in the JES destination routing tables.

JES3: The supplied destination is not syntactically correct (See *z/OS MVS JCL Reference* for the correct syntax) or a valid NJE destination was supplied (an external writer cannot select work destined for NJE nodes).

SSSOAUTH (32)
Authorization failed

(JES3 only) The user exit IATUX30 denied the external writer access to this request.

SSSOTKNM (36)
Token map failed

The requested RACROUTE TOKENMAP function failed. JES does not set the SSSOTKNG bit, and no token is provided in the field pointed to by the SSSOSECT field.

SSSO Contents: The SSSO control block contains the following information about the data set returned from your external writer's retrieval request:

Field Name
Description

SSSOFLG2
Flag byte

- **SSSODDST —** DD name set in the extension.

  JES sets this flag upon return from a retrieval request, so that your external writer knows that the SSSOPRCD, SSSOSTPD, and SSSODDND fields have been returned with the three part DDNAME of proc-step name, step name, DDNAME.

SSSOCOPY
Number of copies.

JES provides the data set to your external writer as many times as the copy count from the creating JCL specifies it.

The value of this field depends on which JES is being used:

JES2: This field is always set to '1' on a retrieval request.

JES3: This field is always set to '1' on a retrieval request.

SSSOJOBN
Job name associated with the returned data set (retrieval request).

SSSOJOBI
Job ID associated with the returned data set (retrieval request).

SSSOCLAS
Class associated with the returned data set (retrieval request).

If your external writer set the SSSOSCLS bit and the SSSOCLSL field, this class matches a class in the list contained in the SSSOCLSL field (if a multiple class list was specified), or the single class in the SSSOCLSL field (if only one class was specified).

SSSOMLRL
Maximum logical record length associated with the returned data set.

For JES3, if the length in the SYSOUT data set was not valid, a zero is returned. If the data set is a system data set, such as JESJCL, then a value of '133' is returned.

SSSODEST
Destination associated with the returned data set (retrieval request).

SSSOPGMN
Writer name or user ID associated with the returned data set (retrieval request, if available).

The specific information returned depends on the setting of the SSSOWTRN or SSSOUSER bits (retrieval request).

JES2: If neither the SSSOWTRN or SSSOUSER bits are specified, then this field contains the writer name associated with this data set.

Note: The SSSOPGMN field is filled in regardless of whether the SSSOSPGM bit is set. It contains a user ID only when the SSSOUSER bit is set.

SSSODSN
Returned data set name (retrieval request).

Upon return from a retrieval request, your external writer must use this name in the dynamic allocation of the data set. See "Processing Flow for Single Data Set Requests" on page 29 for additional details.

The returned data set name is in the fully-qualified, form of: userid.jobname.jobid.dsidentifier.dsname (JES2) or userid.jobname.jobid.dsnumber.dsname (JES3).

SSSOFORM
First four characters of the form name associated with the returned data set name (retrieval request). The SSSOFOR8 field contains the 8-character form name.

SSSOWTRC
Pointer to a communication area for your external writer for a retrieval request.

This area contains additional information about the:

- Data set
- Owning job
- Wait-for-work ECB.

Your external writer might need to use this information in its processing. See "The Writer Communication Area" on page 32 for more information.

The fields that follow from the SSSOFLG5 field through the SSSOOGNM field are available as output fields only when you specify SOEXT=YES on the IEFSSSO invocation. The external writer sets the SSSOPSEE bit. IBM recommends that you specify SOEXT=YES on the IEFSSSO invocation, as additional information is returned to the external writer.

Field Name
Description

SSSOFLG5
Flag byte

- **SSSOTKNG —** Token mapped.

  JES sets the SSSOTKNG bit if the token was returned to the version requested by your external writer through the setting of the SSSOTKNR on the retrieval request.

  SSSOSECT points to the returned token with its new version and length.
- **SSSOGNVA —** (JES2 only) Output group name provided in the SSSOOGNM field for a retrieval request.

SSSOLNCT
Line count of the returned data set provided for a retrieval request.

The value is correct if the task that created the SYSOUT data set went through end-of-task processing.

The line count includes only records with a non-zero text length that have data associated with them. The count does not include records that start with machine immediate control characters. For example, if a 600-line data set is produced with machine carriage control characters and includes one Skip-to-Channel-1-Immediate command every 60 lines, then there would be 610 records in the data set, but field SSSOLNCT would have a value of 600.

SSSOPRCD
Proc step name of the returned data set provided if:

- JES set the SSSODDST bit upon return to your external writer.
- A retrieval request is being made.

SSSOSTPD
Data set step name of the returned data set provided if:

- JES set the SSSODDST bit upon return to your external writer.
- A retrieval request is being made.

SSSODDND
Data set ddname of the returned data set provided if:

- JES set the SSSODDST bit upon return to your external writer.
- A retrieval request is being made.

SSSOSECT
| Pointer whose contents remain unchanged from the retrieval request, but
| whose address now points to the returned data set's SAF token.

If your external writer did not set the SSSOTKNR bit, JES copied the token to the address specified in the SSSOSECT field. This copy was performed assuming that the receiving length is as long as the length of a version 1 security token. If your external writer did not allocate enough storage at the address pointed to by the SSSOSECT field, a protection exception might occur.

If both:

- Your external writer set the SSSOTKNR bit to indicate to SAF to return a token with a different version and length on the retrieval request, and JES successfully performed this function.
- JES set the SSSOTKNG bit

The SSSOSECT field points to the token in the correct format.

SSSOFOR8
Form name of the returned data set name for a retrieval request.

SSSOACCT
(JES2 only) Address of an accounting string for the returned data set for a retrieval request, or zero.

Your external writer must be in AMODE 31 to access this data. The data is in the following format:

- A 1-byte field containing the number of pairs that follow.
- Zero or more accounting pairs, each of the form:
  - A 1-byte field containing the length of the accounting string.
  - The actual accounting string itself with the length that is specified in the first byte.

    A length of zero indicates an omitted field.

For example, if the original accounting information had been specified as (12,,ABCD), the field pointed to by the SSSOACCT would be: '03 02 F1 F2 00 04 C1 C2 C3 C4' in storage.

SSSOOGNM
(JES2 only) JES2 output group name of the returned data set.

The SSSOGNVA flag is set if the field is valid.

Processing Flow for Single Data Set Requests

Your external writer can process single data set requests by:

- (JES2 and JES3) Processing one data set at a time.
- (JES3 only) Processing all data sets together (update request).

Processing One Data Set at a Time (JES2 and JES3): Your external writer can use the following steps for proper selection, allocation, retrieval, and unallocation of an individual SYSOUT data set:

1. Build the appropriate SSOB and SSSO control blocks for the request according to the individual selection criteria desired.
2. Issue the IEFSSREQ macro asking JES for the name of a data set.

   This step includes setting the SSSOUFLG flag byte to X'00', and the SSSOCTRL bit to 0.

   Upon return the name of the data set is in the SSSODSN field.
3. Allocate the data set through dynamic allocation (DYNALLOC macro).

   Your external writer can use the following text units:

   - DALDSNAM

     Used with the returned name from the SSSODSN field.
   - DALSSREQ

     Indicates a request that JES needs to handle. The parameter value in this text unit is the name of the subsystem that processed the IEFSSREQ macro.
   - DALRTDDN

     Indicates the DDNAME associated with the allocation be returned to the caller of DYNALLOC. Your external writer then places this DDNAME in the DCB macro that needs to open the SYSOUT data set as input for your reads. Prime the parameter in this text unit with blank (X'40') characters before issuing the DYNALLOC macro. This text unit is returned from DYNALLOC with the correct DDNAME.

     Your external writer will also use this DDNAME in the dynamic unallocation of the data set when performing unallocation processing.
4. Open the program-supplied DCB.

   Move the returned DDNAME from the DALRTDDN field as the DCB's DDNAME before issuing the OPEN.

   The following is an example of a DCB that may be used to obtain the records:

   ```
   INDCB    DCB   DSORG=PS,MACRF=GL,BUFNO=1,                             X

                  SYNAD=some-routine,EODAD=some-routine
   ```

   Note: Multiple QSAM buffers here do not improve performance. IBM recommends BUFNO=1.

   Your program can issue BSAM and QSAM macros in 31-bit mode. See *z/OS DFSMS Macro Instructions for Data Sets*.
5. Optionally open any other devices that the program requires.
6. Access the records in the SYSOUT data set.
7. Upon EODAD, close the input DCB and issue the FREEPOOL macro unless you coded RMODES31=BUFF on the DCBE macro.
8. Unallocate the data set through dynamic allocation (DYNALLOC).

   Optionally, you can perform disposition processing to change the attributes of the returned data set.

   The specific text units to be used are:

  - DUNDDNAM

    This text unit indicates an unallocation by DDNAME. The DDNAME the external writer must use is the same one used for the data set allocation.
  - DUNOVDSP

    This text unit indicates a disposition override. You must specify one of the following:
    - Keep the data set on the spool. For JES2, when you specify keep as the disposition, JES2 assumes that the external writer has failed and treats the next PSO request as if you had set the SSSOCTRL bit.
    - Delete the data set from the spool.

    If you are performing immediate disposition and wish to delete the data set, use the X'04' value as the disposition flag. Otherwise, you can use the X'08' value to keep the data set on the spool.

  Optionally you may use any of the following text units to modify the queue, change the destination, or change the SYSOUT class of the data set during unallocation.

  In JES3, the only queue modification you can make is moving the data set from the HOLD queue to the WRITER queue.
  - DUNOVSNH

    For JES2, the data set selected is already on the output queue with a disposition of WRITE or KEEP, and this text unit is not specifiable.

    For JES3, this text unit removes the data set from the HOLD queue, and puts it on the WRITER queue.
  - DUNOVCLS

    For JES3, this text unit changes the SYSOUT class of the data set on the HOLD queue.
  - DUNOVSUS

    For JES3, this text unit overrides the destination of the SYSOUT data set, and can be used to route SYSOUT to another destination.

9. Either issue the IEFSSREQ macro again for another data set, or issue the IEFSSREQ macro for a final call (the SSSOCTRL bit is set), to disassociate the program from JES.

Processing All Data Sets Together (JES3 only - update request): Your external writer performs the actions specified in the SSSO control block in all data sets matching the selection criteria in the SSSO control block, when the IEFSSREQ macro is issued with a non-zero SSSOUFLG flag byte. Individual data set names are not returned in this case.

The SSSODSN field can be zero if more than one data set matching the other selection criteria is modified. Any previously allocated single data sets must be unallocated, however, before this update request is made.

External Writer Considerations

A standard external writer is designed to request work and perform disposition processing of work to each JES in the following ways:
- It is initiated from the user's address space

  Therefore, it is a completely separate MVS job. This separation allows for processing overlap and address space integrity. In JES3, because the SSI is involved for scheduling communication, the external writers may exist on local processors as well as the global processor.

- It is functionally independent of JES

  There is neither a print processor running in the JES2 address space, nor a writer DSP running in the JES3 global address space.
- It is not automatically started by JES

  MVS does not supply an automatic facility to create this address space. If the external writer is running as a started task, you can use an operator START command to create this address space or you can submit a batch job. Your application (external writer) makes this decision. Your external writer should also have a mechanism to end itself.
- It may drive a non-JES supported device

  This is the primary purpose of the external writer. If the SYSOUT data set deals with plotting, for instance, a special code in the data may indicate to use the red pen instead of the blue pen. Your external writer can recognize this code as a control sequence, and perform the appropriate actions according to the output device.
- It allows the installation to control the selection of work

  Standard external writers select work through a SYSOUT class dedicated to external writers or a writer name. JES2 and JES3 handle external writer processing differently.

  JES2: The work to be processed is located on the output queue, and has an OUTDISP of WRITE or KEEP. However, conversational data sets, which include data sets located on the output queue with an OUTDISP of HOLD or LEAVE, are not processed in JES2 by the standard external writer. These data sets are destined to be processed by TSO/E users through the OUTPUT command.

  JES3: The work to be processed is located on either the WRITER queue, or the HOLD queue. However, IBM recommends that you process only data sets on the HOLD queue (either by specific SYSOUT class specification as defined on the initialization statement, or by writer name).

  Note: Work destined for TSO/E users (through HOLD=TSO on the specific SYSOUT class initialization statement) is not processed because those data sets are destined to be processed by TSO/E users through the OUTPUT command.
- It does not handle simultaneous multi-tasking within an address space

  The external writer facility in JES does not support concurrent subtasking of work. Unpredictable results will occur if attempted. Once an external writer begins the IEFSSREQ process the first time, calls through the IEFSSREQ are not allowed from any other subtask in the same address space until the first subtask has finished issuing its final call through (SSSOCTRL) IEFSSREQ.
- It interacts with JES by requesting work

  The external writer makes a request of JES for work by using the selection criteria, and then uses dynamic allocation to allocate a returned SYSOUT data set for processing.
- It handles retrieval requests

  Both JES2 and JES3 support retrieval requests. That is, the external writer issues the IEFSSREQ macro asking JES to supply the name of a selectable SYSOUT data set. The external writer processes that data set through dynamic allocation. See "Processing Flow for Single Data Set Requests" on page 29 for more information on the processing flow.

  Updates to selected attributes for a particular data set (such as destination and class change) can be made through the unallocation facility as described within this documentation.
- It handles update requests

An update request is allowable only for JES3.

JES3 allows update requests through the IEFSSREQ macro for one or more data sets whose selection criteria matches the criteria supplied by the external writer directly through the IEFSSREQ macro.

However, individual data sets obtained through the IEFSSREQ retrieval/allocation process should have their attributes changed during the dynamic unallocation as described in the retrieval information above.

Update requests may be performed on more than one data set at a time when the external writer:

- Issues the IEFSSREQ macro
- Does not specify a specific data set name within the SSSO control block.

This is a powerful facility. However, you should be careful when using it, as the scope of such a modification may be large when more than one data set is involved.

- It uses MVS services to communicate to JES

  SSI function code 1 schedules work by allowing the external writer to indicate which types of data sets it wishes to process and then asking JES to return the name of a SYSOUT data set to the external writer. Dynamic allocation of this spooled data set is performed through dynamic allocation (DYNALLOC). The records of the spooled data set may be obtained through sequential access methods (SAM GETs). A dynamic unallocation is used to deallocate the SYSOUT data set (upon EODAD), which optionally changes some of its attributes.
- Spool access is provided by sequential access methods

  SAM is used to obtain the records of the SYSOUT data set from the spool. This implies familiar coding techniques, such as OPENs, GETs, and CLOSEs.
- It handles all data record processing

  Once a record is supplied to the external writer on a GET, the external writer has control of the record. For example, it can print the record or archive the record, depending on the purpose of the external writer.
- It may wait for JES to post it for new work if idle

  When JES sends a no-work-available notice to the external writer, it may sit idle until it receives a POST from JES, telling it that work is available. It may then ask JES again for the newly available work.

  This process uses WAIT and POST logic with an ECB returned to the external writer.

  JES2 does not POST the external writer if invoked from a batch job; it must be a started task for such posting to occur.

The Writer Communication Area

On return from the IEFSSREQ macro, the SSSOWTRC field contains a pointer to the writer communication area, a series of fields in storage.

The first field in this area is a wait-for-work ECB that JES posts when work becomes available and an SSSOEODS return was previously issued. If you had received an SSSOEODS return, you could wait on this fullword and then retry your request (another IEFSSREQ macro).

All of the fields following the first fullword contain data about the data set returned during retrieval requests, and are contiguous in storage.

Writer Communication Area Contents: The fields in the writer communication area contain:

- Wait-for-work ECB (described earlier).

  Length of 4 bytes.
- Start time of the job creating the SYSOUT data set returned. The format is from the TIME macro with BIN specified.

  Length of 4 bytes.
- Start date of the job creating the SYSOUT data set returned, in packed decimal form where F is the sign: 0cyydddF.

  Length of 4 bytes.
- The installation dependent value from JMRUSEID.

  Length of 8 bytes.

Example

The following is a coded example of a program that generates a Process SYSOUT Data Set call. It requests a SYSOUT data set from JES through a writer name and reads each record of the data set. When the routine reaches the end of the data, the SYSOUT data set is deallocated and the SYSOUT class and destination are updated. The routine ends and cycles back to the beginning to ask JES for the next data set.

This routine is non-reentrant, and must reside below 16 megabytes in an APF-authorized library.

```
SSIREQ01 TITLE '- DOCUMENTATION'
SSIREQ01 AMODE 31
SSIREQ01 RMODE 24
         SPLEVEL SET=4
**********************************************************************
* FUNCTION:  THIS PROGRAM PERFORMS THE FOLLOWING FUNCTIONS:          *
*                                                                    *
*        1. REQUESTS A SYSOUT DATA SET FROM JES THROUGH A WRITER     *
*           NAME (SHOWS AN EXAMPLE OF USING ONE OF THE AVAILABLE     *
*           SELECTION CRITERIA TO INFLUENCE WHICH SYSOUT DATA SET    *
*           IS SELECTED).  THIS PROGRAM IS INTENDED TO RUN ON JES3   *
*           ONLY, AS IT SHOWS SELECTION CRITERIA AVAILABLE ONLY TO   *
*           JES3.  (SPECIFICALLY, BIT SSSOHLD IS USED.)              *
*        2. IF ONE IS NOT AVAILABLE, THE OPERATOR CAN WAIT UNTIL     *
*           ONE IS AVAILABLE, OR EXIT THE PROGRAM.                   *
*        3. IF ONE IS AVAILABLE, IT IS DYNAMICALLY ALLOCATED.        *
*        4. EACH RECORD IS READ AND DISPLAYED TO THE OPERATOR.       *
*        5. UPON END-OF-DATA, THE SYSOUT DATA SET IS DEALLOCATED.    *
*           THE SYSOUT CLASS IS CHANGED TO 'A', AND THE              *
*           DESTINATION IS CHANGED TO 'PRT803'.                      *
*           (SHOWS AN EXAMPLE OF USING THE AVAILABLE DYNAMIC         *
*           ALLOCATION TEXT UNIT TO CHANGE THE ATTRIBUTES OF THE     *
*           RECEIVE SYSOUT DATA SET DURING UNALLOCATION.)            *
*        6. THE PROGRAM THEN CYCLES BACK AND ASKS JES FOR THE NEXT   *
*           DATA SET (GOES TO STEP 1).                               *
*                                                                    *
* NAME OF MODULE:  SSIREQ01                                          *
*                                                                    *
* REGISTER USE:                                                    *
*                                                                    *
*              0                   PARM REGISTER                     *
*              1                   PARM REGISTER                     *
*              2                   SSOB                              *
*              3                   SSSO                              *
*              4                   DCB                               *
*              5                   RB                                *
*              6                   MAX RECORD LENGTH                 *
*              7                   DUMP CODE                         *
*              8                   ABEND VALUE REGISTER              *
*              9                   IEFSSREQ RETURN CODES             *
*             10                    BASE REGISTER                     *
*             11                    TEXT RECORD STRUCTURE PTR         *
*             12                    UNUSED                            *
*             13                    SAVE AREA CHAIN REGISTER          *
*             14                    PARM REGISTER / RETURN ADDR       *
*             15                    PARM REGISTER / COND CODE         *
*                                                                     *
* ATTRIBUTES:  SUPERVISOR STATE, AMODE(31), RMODE(24)                 *
*                                                                     *

*                                                                     *
* NOTE:  THIS IS A SAMPLE.                                            *
***********************************************************************
         TITLE '- EQUATES'
***********************************************************************
*        GENERAL EQUATES                                              *
***********************************************************************
EQUHOBON EQU   X'80000000'          HIGH ORDER BIT ON
FF       EQU   X'FF'                ALL BITS ON IN A BYTE
***********************************************************************
*        AFTER COMPARE INSTRUCTIONS                                   *
***********************************************************************
GT       EQU   2                    A HIGH
LT       EQU   4                    A LOW
NE       EQU   7                    A NOT EQUAL B
EQ       EQU   8                    A EQUAL B
GE       EQU   11                   A NOT LOW
LE       EQU   13                   A NOT HIGH
*
***********************************************************************
*        AFTER ARITHMETIC INSTRUCTIONS                                *
***********************************************************************
OV       EQU   1                    OVERFLOW
PLUS     EQU   2                    PLUS
MINUS    EQU   4                    MINUS
NZERO    EQU   7                    NOT ZERO
ZERO     EQU   8                    ZERO
ZEROS    EQU   8                    ZERO
NMINUS   EQU   11                   NOT MINUS
NOV      EQU   12                   NOT OVERFLOW
NPLUS    EQU   13                   NOT PLUS
*
***********************************************************************
*        AFTER TEST UNDER MASK INSTRUCTIONS                           *
***********************************************************************
ALLON    EQU   1                    ALL ON
MIXED    EQU   4                    MIXED
NALLOFF  EQU   5                    ALLON+MIXED
ALLOFF   EQU   8                    ALL OFF
NALLON   EQU   12                   ALLOFF+MIXED
***********************************************************************
*        ABEND CODE INDICATIONS                                       *
***********************************************************************
BADR15   EQU   1                    IEFSSREQ R15 NON-ZERO
BADRETN  EQU   2                    SSOBRETN NON-ZERO AND NOT 8
BADS99A  EQU   3                    DYNALLOC ALLOC FAILED
BADOPEN  EQU   4                    OPEN DCB FAILED
BADS99U  EQU   5                    DYNALLOC UNALLC FAILED
BADRLEN  EQU   6                    PSO DATASET TOO LARGE (RECLEN)

***********************************************************************
*        GENERAL PURPOSE REGISTERS                                    *
***********************************************************************
R0       EQU   0                    PARM REGISTER
R1       EQU   1                    PARM REGISTER
R2       EQU   2                    SSOB
R3       EQU   3                    SSSO
R4       EQU   4                    DCB
```

```
R5       EQU   5                   RB
R6       EQU   6                   MAX RECORD LENGTH
R7       EQU   7                   DUMP CODE
R8       EQU   8                   ABEND VALUE REGISTER
R9       EQU   9                   RETURN CODES OR REASONS
R10      EQU   10                  BASE REGISTER
R11      EQU   11                  TEXT RECORD STRUCTURE PTR
R12      EQU   12                  UNUSED
R13      EQU   13                  SAVE AREA CHAIN REGISTER
R14      EQU   14                  PARM REGISTER / RETURN ADDR
R15      EQU   15                  PARM REGISTER / COND CODE
         TITLE '- CVT - COMMUNICATIONS VECTOR TABLE'
         CVT DSECT=YES,LIST=NO
         TITLE 'DCBD'
         DCBD  DSORG=PS
         TITLE '- IEFJESCT - JES CONTROL TABLE'
         IEFJESCT TYPE=DSECT
         TITLE '- SSOB'
         IEFSSOBH
SSOBGN   EQU   *                   START OF FUNCTIONAL EXTENSION
         TITLE '- SSSO'
         IEFSSSO SOEXT=YES
         TITLE '- IEFZB4D0 - SVC99 DSECTS'
         IEFZB4D0
         TITLE '- IEFZB4D2 - TU KEYS'
         IEFZB4D2
**********************************************************************
*  HOUSEKEEPING                                                      *
**********************************************************************
SSIREQ01 CSECT
         SAVE  (14,12)             FORM ID
         BALR  R10,0               ESTABLISH BASE REG
         USING *,R10               INFORM ASSEMBLER
         LA    R2,SA               CHAIN SAVEAREAS
         ST    R13,4(R2)           OLD IN NEW
         ST    R2,8(R13)           NEW IN OLD
         LR    R13,R2              RECHAIN THE SAVE AREAS
         TITLE '- PROCESS SYSOUT'
         WTO   'SSI CODE 01 Version 1'  LET OP KNOW WHAT LEVEL
         STORAGE OBTAIN,           GET STORAGE FOR SSOB/SSSO
               LENGTH=SSOBLEN1,
               COND=NO
         LR    R2,R1               SAVE BEGINNING OF STORAGE
         USING SSOBEGIN,R2         INFORM ASSEMBLER
         LA    R3,SSOBGN           PT TO BEGINNING OF SSSO
         USING SSSOBGN,R3          INFORM ASSEMBLER
         TITLE '- SSOB PROCESSING'

**********************************************************************
* NOW WORK ON THE SSOB.  THE LIFE-OF-JOB IS USED HERE, SO THE        *
* SSOBSSIB IS ZERO.                                                  *
**********************************************************************
         XC    SSOB(SSOBHSIZ),SSOB CLEAR THE SSOB
         MVC   SSOBID,=CL4'SSOB'   SSOB INITIALS INTO SSOB
         MVC   SSOBFUNC,=AL2(SSOBSOUT) MOVE FUNCTION ID INTO SSOB
         MVC   SSOBLEN,=AL2(SSOBHSIZ) MOVE SIZE INTO SSOB
         ST    R3,SSOBINDV         SAVE THE SSSO ADDRESS
         TITLE '- SSSO PROCESSING'
**********************************************************************
* NOW WORK ON THE SSSO.  SELECT A SELECTION CRITERIA BASED ON        *
* AN EXTERNAL WRITER NAME OF 'ANDREW'.                               *
**********************************************************************
         XC    SSSOBGN(SSSOSIZE),SSSOBGN  CLEAR THE SSSO
         MVC   SSSOLEN,=AL2(SSSOSIZE)     SET THE SIZE OF THE SSSO
         MVI   SSSOVER,SSSOCVER    SET THE VERSION NUMBER
         OI    SSSOFLG1,SSSOSPGM+SSSOHLD   SELECT BY WRITER NAME AND
*                                  THE HOLD QUEUE
         OI    SSSOFLGA,SSSOWTRN   IND. THAT SELECTION IS BY
```

```
*                                  WRITER NAME, NOT USERID
         MVC   SSSOPGMN,=CL8'ANDREW'  IND. CORRECT WRITER NAME
*                                     THAT IS USED AS SELECTION
         OI    SSSOFLG2,SSSOPSEE   IND. LONG FORM OF IEFSSSO
*********************************************************************
* NOW GO TAP JES ON THE SHOULDER FOR A DATASET!                     *
*********************************************************************
NEXTDS   DS    0H                  GET NEXT DSNAME FROM JES
         MODESET MODE=SUP          GET INTO SUPERVISOR STATE
         LR    R1,R2               R1=ADDRESS OF SSOB
         O     R1,=A(EQUHOBON)     TURN ON THE HIGH-ORDER BIT
         ST    R1,MYSSOBPT         SAVE POINTER FOR SSREQ
         LA    R1,MYSSOBPT         POINT TO SSOB POINTER
         IEFSSREQ ,                GO TO JES FOR A DATASET
         MODESET MODE=PROB         BACK TO PROBLEM STATE
         LA    R8,BADR15           ASSUME BAD REG 15 RETURN
         LTR   R9,R15              DID THE IEFSSREQ WORK OK?
         BC    NZERO,ABEND         NOT GOOD...TAKE AN ABEND
         LA    R8,BADRETN          ASSUME BAD SSOBRETN
         ICM   R9,B'1111',SSOBRETN CHECK OUT SSOBRETN
         BC    NZERO,TESTIT        NON-ZERO, INVESTIGATE FURTHER
*********************************************************************
* WE HAVE A DATA SET.  NOW DYNAMICALLY ALLOCATE IT, READ AND DISPLAY*
* THE RECORDS USING SEQUENTIAL ACCESS METHOD AS EXAMPLE OF HOW TO   *
* RETRIEVE THE DATA.                                                *

*********************************************************************
         TITLE '- ALLOCATE RETURNED DATASET'
*********************************************************************
* ALLOCATE THE RETURNED SYSOUT DATASET                              *
*********************************************************************
         LA    R8,BADRLEN          ASSUME SIZE TOO LARGE FOR WTO
         SR    R6,R6               CLEAR REG 6
         ICM   R6,B'0011',SSSOMLRL GET MAX RECORD LENGTH
         CH    R6,=H'150'          IS MAX RCD LENGTH>150??
         BC    GT,ABEND            YES - TIME FOR US TO GO HOME
         STH   R6,RECLEN           SAVE MAX RECORD LENGTH
         LA    R5,MY99RB           PT TO RB
         USING S99RB,R5            ADDRESSABILITY TO THE RB
         XC    S99RB(RBLEN),S99RB  ZERO THE RB
         MVI   S99RBLN,RBLEN       RB LENGTH
         MVI   S99VERB,S99VRBAL    RB VERB CODE=ALLOC
         LA    R1,MY99TPTA         ADDR SVC 99 ALLOC TU PTRS
         ST    R1,S99TXTPP         STORED IN RB
         LA    R1,MY99RBPT         PT TO RB POINTER
         MVC   TXTDSNAM,SSSODSN    MOVE DATASET NAME TO BE ALLOCATED
         DYNALLOC                  ISSUE DYNAMIC ALLOCATION
         LA    R8,BADS99A          ASSUME IT DIDN'T WORK
         LR    R9,R1               COPY FOR DUMP
         LTR   R15,R15             SVC 99 WORK OKAY??
         BC    NZERO,ABEND         NO, TAKE A DUMP
*********************************************************************
* SYSOUT DATASET ALLOCATED OKAY.   MOVE RETURNED DDNAME INTO        *
* THE DCB PRIOR TO OPENING IT.                                      *
*********************************************************************
         LA    R4,INDCB            PT TO THE INPUT DCB
         USING IHADCB,R4           ADDRESSABILITY
         MVC   DCBDDNAM(8),TXTDDA99 MOVE IN RETURNED DDNAME
         MVC   TXTDDU99,TXTDDA99   SAVE FOR UNALLOCATION
         MVC   DCBLRECL,SSSOMLRL   MOVE MAX LENGTH RECORD IN
*                                                                   *
         OPEN  INDCB               OPEN THE DCB
         LA    R8,BADOPEN          ASSUME THE OPEN FAILED
         LR    R9,R4               COPY FOR DUMP
         TM    DCBOFLGS,DCBOFOPN   DID IT WORK?
         BC    ALLOFF,ABEND        NOPE, TAKE A DUMP
         TITLE '- GET THE RECORDS - DISPLAY TO PROGRAM'
GETNEXT  DS    0H                  LOOP FOR READING/DISPLAYING
```

```
**********************************************************************
* SWITCH TO 24 BIT MODE FOR GET MACRO                                *
**********************************************************************
         LA    R15,SSITO24         SWITCH TO 24 BIT MODE ...
         BSM   0,R15               ... FOR RESTRICTED MACRO
SSITO24  DS    0H
         GET   INDCB               R1==> RECORD AFTER THE GET
         L     R15,SSITO31A        RETURN TO 31 BIT MODE ...
         BSM   0,R15               ... AND CONTINUE
SSITO31A DC    A(SSITO31+EQUHOBON) FOR MODE SWITCHING
**********************************************************************
* RETURN TO 31 BIT MODE AND CONTINUE                                 *
**********************************************************************
SSITO31  DS    0H
         EX    R6,MOVEIT           MOVE UP TO 150 BYTES OF REC
         LA    R11,RECLEN          POINT TO RECORD FOR OUTPUT
         WTO   TEXT=(11),ROUTCDE=11 DISPLAY TO JOBLOG
         MVI   RECTEXT,C' '        CLEAR RECORD OUT...
         MVC   RECTEXT+1(L'RECTEXT-1),RECTEXT  ..FOR NEXT ONE
         B     GETNEXT             GO GET NEXT RECORD
         TITLE '- EODAD ROUTINE'
MYEODAD  DS    0H                  END-OF-DATASET
         CLOSE INDCB               CLOSE THE INPUT DCB
         DROP  R4                  IHADCB
**********************************************************************
* UNALLOCATE THE SYSOUT DATASET, CHANGING CLASS + DESTINATION        *
**********************************************************************
         XC    S99RB(RBLEN),S99RB  ZERO THE RB
         MVI   S99RBLN,RBLEN       RB LENGTH
         MVI   S99VERB,S99VRBUN    RB VERB CODE=UNALLOC
         LA    R1,MY99TPTU         ADDR SVC 99 ALLOC TU PTRS
         ST    R1,S99TXTPP         STORED IN RB
         LA    R1,MY99RBPT         PT TO RB POINTER
         DYNALLOC                  ISSUE DYNAMIC UNALLOCATION
         LA    R8,BADS99U          ASSUME IT DIDN'T WORK
         LR    R9,R1               COPY FOR DUMP
         LTR   R15,R15             SVC 99 WORK OKAY??
         BC    NZERO,ABEND         NO, TAKE A DUMP
         B     NEXTDS              GO GET NEXT DATA SET
         TITLE '- BAD RETURN FROM IEFSSREQ'
TESTIT   DS    0H
**********************************************************************
*  R8 HAS THE 'BADRETN' ASSUMPTION VALUE FOR POSSIBLE ABEND.         *
*  R9 HAS A NON-ZERO VALUE FROM SSOBRETN FROM THE IEFSSREQ.          *
**********************************************************************
         CH    R9,NOMORE           END OF DATA SET RETURN?
         BC    NE,ABEND            NOPE - QUIT!
**********************************************************************
*  WE RECEIVED THE END-OF-DATA CONDITION.  ASK WHETHER WE            *
*  SHOULD WAIT ON RETURNED ECB, OR COMPLETE NOW,                     *
**********************************************************************

         XC    MYECB,MYECB         CLEAR THE ECB
         WTOR  'ENTER 'W' OR WAIT, ANYTHING ELSE TO EXIT',
               MYREPLY,
               1,
               MYECB
         WAIT  ECB=MYECB
         OI    MYREPLY,C' '        FORCE REPLY TO UPPER CASE
         CLI   MYREPLY,C'W'        SHOULD WE WAIT?
         BC    NE,EXIT             NO, EXIT
**********************************************************************
* WAIT INDICATED.  SET UP WAIT ON THE RETURNED ECB.                  *
**********************************************************************
         MODESET KEY=ZERO          GET INTO KEY 0
         L     R1,SSSOWTRC         POINT TO RETURNED DATA AREA
         WAIT  ECB=(1)             R1==>RETURNED WAIT-FOR ECB
         MODESET KEY=NZERO         BACK TO ORIGINAL
         B     NEXTDS              WE'RE POSTED - GO GET IT!
         TITLE '- CLOSE OUT ROUTINES'
EXIT     DS    0H                  FINAL CALL, RETURN TO MVS
         MVI   SSSOFLG2,SSSOCTRL   IND. FINAL CALL TO JES
         MODESET MODE=SUP          GET INTO SUPERVISOR STATE
         LA    R1,MYSSOBPT         POINT TO SSOB POINTER
         IEFSSREQ ,                GO TO JES FOR GIVE BACK
         MODESET MODE=PROB         BACK TO PROBLEM STATE....
         STORAGE RELEASE,          FREE SSOB/SSSO
               LENGTH=SSOBLEN1,
               ADDR=(R2)           HERE'S WHERE IT LIVES
         L     R13,4(,R13)         OLD SA PTR
         RETURN (14,12),RC=0       BACK TO MVS
         TITLE '- ABEND ROUTINES'
*********************************************************************
* THIS IS THE ABEND ROUTINE.  R8 CONTAINS THE PROGRAM REASON CODE,  *
* R9 CONTAINS SPECIFIC ERROR/REASON CODE AS RETURNED BY THE         *
* SERVICE ROUTINE.                                                  *
*********************************************************************
ABEND    DS    0H                  ISSUE THE ABEND MACRO
         ABEND (8),DUMP,STEP       TAKE A DUMP IF WANTED
         TITLE '- DATA AREAS'
SA       DS    9D                  SAVE AREAS
MYECB    DS    F                   DOUBLEWORD FOR WTOR
*
MYREPLY  DS    CL1                 REPLY AREA FOR WTORS
RESRV    DS    XL3                 ROUND TO FULL WORD
         TITLE '- DYNALLOC DATA'
*********************************************************************
* THE FOLLOWING CONTROL BLOCKS ARE FOR DYNAMIC ALLOCATION AND       *
* UNALLOCATION.                                                     *
*********************************************************************

* S99 REQUEST BLOCK POINTER                                         *
*********************************************************************
MY99RBPT DC    A(EQUHOBON+MY99RB)  S99 RB PTR
*********************************************************************
* S99 REQUEST BLOCK                                                 *
*********************************************************************
MY99RB   DS    CL(RBLEN)           MY SVC 99 RB
RBLEN    EQU   (S99RBEND-S99RB)    LENGTH OF RB FOR MY99RB
*********************************************************************
* TEXT UNIT POINTERS FOR ALLOCATION                                 *
*********************************************************************
MY99TPTA DC    A(TXTDALDS)         TU FOR DATASET NAME
         DC    A(TXTSSREQ)         NAME OF SUBSYSTEM TU PTR
         DC    A(EQUHOBON+TXTRTDDN) RETURN DD NAME TU
*********************************************************************
* TEXT UNIT POINTERS FOR UNALLOCATION                               *
*********************************************************************
MY99TPTU DC    A(TXTDUNDD)         TU FOR UNALLOC BY DDNAME
         DC    A(TXTDUNNH)         NOHOLD TU
         DC    A(TXTDUNCL)         CHANGE THE CLASS TU
         DC    A(EQUHOBON+TXTDUNDS) CHANGE THE DEST TU
*********************************************************************
* TEXT UNITS FOR ALLOCATION                                         *
*********************************************************************
TXTDALDS DC    AL2(DALDSNAM)       DATASET NAME KEY
         DC    X'0001'             NUMBER
         DC    AL2(44)             DSNAME LENGTH
TXTDSNAM DS    CL44' '             DSNAME FROM IEFSSREQ
TXTCLOSE DC    AL2(DALCLOSE)       UNALLOCATE AT CLOSE KEY
         DC    X'0000'             # FIELD (0000 REQUIRED)
TXTSSREQ DC    AL2(DALSSREQ)       REQUEST OF SUBSYSTEM
         DC    X'0001'             # FIELD (0001 REQUIRED)
         DC    X'0004'             LEN OF SS NAME FOLLOWING
         DC    CL4'JES3'           NAME OF SUBSYSTEM
TXTRTDDN DC    AL2(DALRTDDN)       RETURN DDNAME FIELD
```

```
         DC    X'0001'             # FIELD (0001 REQUIRED)
         DC    X'0008'             LEN OF PARM
TXTDDA99 DC    CL8' '              RETURNED DDNAME PARM FIELD
**********************************************************************
* TEXT UNITS FOR UNALLOCATION                                        *
**********************************************************************
TXTDUNDD DC    AL2(DUNDDNAM)       TU FOR DDNAME UNALLOC
         DC    X'0001'             NUMBER
         DC    AL2(8)              DDNAME LENGTH
TXTDDU99 DS    CL8' '              DDNAME FROM DYNALLOC
TXTDUNNH DC    AL2(DUNOVSNH)       TU FOR NOHOLD
         DC    X'0000'             # FIELD (0000 REQUIRED)
TXTDUNCL DC    AL2(DUNOVCLS)       TU FOR CHANGE OF CLASS
         DC    X'0001'             # FIELD (0001 REQUIRED)
         DC    X'0001'             LEN OF SYSOUT CLASS
         DC    CL1'A'              CHANGED SYSOUT CLASS
TXTDUNDS DC    AL2(DUNOVSUS)       TU FOR CHANGE OF REMOTE
         DC    X'0001'             # FIELD (0001 REQUIRED)
         DC    X'0008'             LEN OF CHANGED REMOTE
         DC    CL8'PRT803'         CHANGED REMOTE NAME
MYSSOBPT DS    F                   POINTER TO SSOB FOR IEFSSREQ
NOMORE   DC    AL2(SSSOEODS)       NO MORE DATASETS FROM JES
MOVEIT   MVC   RECTEXT(*-*),0(R1)  OBJ OF AN EXECUTE
RECLEN   DS    H                   LENGTH OF OUTPUT RECORD
RECTEXT  DS    CL150               UP TO 150 BYTES OF SYSOUT
INDCB    DCB   DSORG=PS,MACRF=GL,BUFNO=2,EODAD=MYEODAD,               X
               DDNAME=WILLCHNG
         TITLE '- LITERALS'
         LTORG ,
         END
```

User Destination Validation/Conversion — SSI Function Code 11

The user destination validation/conversion (SSI function code 11) provides a requesting program the ability to convert and/or validate a remote destination.

Type of Request

Directed SSI call.

Issued to

- The primary subsystem, either JES2 or JES3.
- A secondary JES2 subsystem

Related SSI Codes

None.

Related Concepts

None.

Environment

The caller (issuer of the IEFSSREQ macro) must include the following mapping macros:

- CVT
- IEFJESCT

Data areas commonly referenced are mapped by the following mapping macros. IBM recommends you include them in your program:

- IEFSSOBH
- IEFJSSIB

- IEFSSUS

The caller must meet the following requirements:

Caller variable	**Caller value**
Minimum Authorization	Problem state, any PSW key.
Dispatchable unit mode	Task
AMODE	24-bit or 31-bit
Cross memory mode	PASN=HASN=SASN
ASC mode	Primary
Interrupt status	Enabled for I/O and external interrupts
Locks	No locks held
Control Parameters	The SSOB, SSIB, and SSUS control blocks can reside in storage above or below 16 megabytes.
Recovery	The caller should provide an ESTAE-type recovery environment. See *z/OS MVS Programming: Assembler Services Guide* for more information on an ESTAE-type recovery environment.

Figure 5 shows the environment at the time of the call for SSI function code 11.

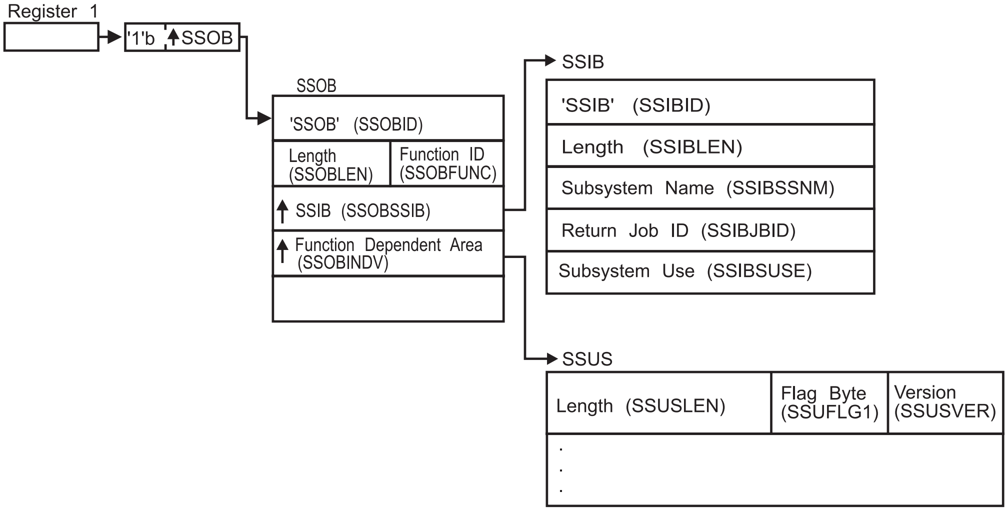
Register 1
'1'b
SSOB
SSOB
'SSOB' (SSOBID)
Length (SSOBLEN)
Function ID (SSOBFUNC)
SSIB (SSOBSSIB)
Function Dependent Area (SSOBINDV)
SSIB
'SSIB' (SSIBID)
Length (SSIBLEN)
Subsystem Name (SSIBSSNM)
Return Job ID (SSIBJBID)
Subsystem Use (SSIBSUSE)
SSUS
Length (SSUSLEN)
Flag Byte (SSUFLG1)
Version (SSUSVER)

Figure 5. Environment at Time of Call for SSI Function Code 11

Input Register Information

Before issuing the IEFSSREQ macro, the caller must ensure that the following general purpose registers contain:

Register	**Contents**
1	Address of a 1-word parameter list that has the high-order bit on and a pointer to the SSOB control block in the low-order 31 bits.
13	Address of a standard 18-word save area

Input Parameters

Input parameters for the function routine are:

- SSOB
- SSIB

- SSUS

SSOB Contents: The caller sets the following fields in the SSOB control block on input:

Field Name
Description

SSOBID
Identifier 'SSOB'

SSOBLEN
Length of the SSOB (SSOBHSIZ) control block

SSOBFUNC
SSI function code 11 (SSOBUSER)

SSOBSSIB
Address of an SSIB control block or zero (if this field is zero, the life-of-job SSIB is used). See "Subsystem Identification Block (SSIB)" on page 8 for more information on the life-of-job SSIB.

SSOBINDV
Address of the function dependent area (SSUS control block)

Set all other fields in the SSOB control block to binary zeros before issuing the IEFSSREQ macro.

SSIB Contents: If you don't use the life-of-job SSIB, the caller must provide an SSIB and set the following fields in the SSIB control block on input:

Field Name
Description

SSIBID
Identifier 'SSIB'

SSIBLEN
Length of the SSIB (SSIBSIZE) control block

SSIBSSNM
Subsystem name — name of the subsystem to which this user destination validation/conversion service call is directed. It is usually the primary JES, or in the case of JES2, a possible secondary JES. If your routine has not been initiated from such a JES, the caller must issue a Request Job ID call (SSI function code 20) prior to this user destination validation/conversion. You must use the same subsystem name in this SSIBSSNM field as you used for the Request Job ID call.

SSIBSUSE
(JES3 only) Subsystem use – the SSIBSUSE value that was returned upon completion of the Request Job ID call (SSI function code 20).

The caller must set all other fields in the SSIB control block to binary zeros before issuing the IEFSSREQ macro.

SSUS Contents: The caller sets the following fields in the SSUS control block on input:

Field Name
Description

SSUSLEN
Length of the SSUS (SSUSIZE) control block

SSUSFLG1
Flag Byte

SSUS1NOD
Return the node name

SSUSCVXE
Destination conversion extension exists

SSUSVER
Version of mapping for the caller – Set this field to SSUSCVER (an IBM-defined integer constant within the SSUS control block).

SSUSUSER
Remote destination to be verified.

SSUSFLG2
Conversion flag byte

SSUS1TO2
Convert one 18 byte field to two 8 byte fields. The input field is SSUSDEST and the output fields are SSUSDST1 and SSUSDST2.

SSUS2TO1
Convert two 8 byte fields to one 18 byte field. The input fields are SSUSDST1 and SSUSDST2 and the output field is SSUSDEST.

SSUSITOC (JES2 only)
Convert a 4 byte internal destination with a 8 byte user destination to a 18 byte character field. The input fields are SSUSIDST and SSUSUDST and the output field is SSUSDEST.

SSUSCTOI (JES2 only)
Convert an 18 byte field to a 4 byte internal destination with an 8 byte user destination. The input field is SSUSDEST and the output fields are SSUSIDST and SSUSUDST.

SSUSGENC (JES2 only)
Generic characters ('*' and '?') are to be allowed as part of a user destination. This is only valid if SSUS1TO2, SSUS2TO1 or SSUSCTOI is set.

SSUSIPAD
IP-format destination included. Only valid if SSUS1TO2, SSUSCTOI or SSUS2TO1 is set.

SSUSDEST
Destination when SSUS1TO2 or SSUSCTOI is set. If SSUSIPAD is set, the first four bytes must contain the address of the full destination.

SSUSDLEN
Length of input destination when SSUSIPAD is set.

SSUSDST1
Destination part 1 when SSUS2TO1 is set.

SSUSDST2
Destination part 2 when SSUS2TO1 is set. If SSUSIPAD is set, the first four bytes must contain the address of the full destination.

SSUSDSLN
Length of input destination when SSUSIPAD is set.

SSUSIDST
Internal destination, if SSUSITOC is set.

SSUSUDST
User destination, if SSUSITOC is set.

Set all other fields in the SSUS control block to binary zeros before issuing the IEFSSREQ macro.

Output Register Information

When control returns to the caller, the general purpose registers contain:

Register	Contents
0	Used as a work register by the system
1	Address of the SSOB control block
2 — 13	Same as on entry to call
14	Return address
15	Return code

Return Code Information

The SSI places one of the following decimal return codes in register 15. Examine the return code to determine if the request was processed.

Return Code (Decimal)	Meaning
SSRTOK (0)	The user destination validation/conversion was processed. Check the SSOBRETN field for specific function information.
SSRTNSUP (4)	The subsystem specified in the SSIBSSNM field does not support this function
SSRTNTUP (8)	The subsystem specified in the SSIBSSNM field exists, but is not active.
SSRTNOSS (12)	The subsystem specified in the SSIBSSNM field is not defined to MVS.
SSRTDIST (16)	The pointer to the SSOB control block or the SSIB control block is not valid, or the function code specified in the SSOBFUNC field is greater than the maximum number of functions supported by the subsystem specified in the SSIBSSNM field.
SSRTLERR (20)	Either the SSIB control block or the SSOB control block has incorrect lengths or formats.
SSRTNSSI(24)	The SSI has not been initialized.

Output Parameters

Output parameters for the function routine are:

- SSOBRETN
- SSUS

SSOBRETN Contents: When control returns to the caller and register 15 contains a zero, the SSOBRETN field contains one of the following decimal values:

Value (Decimal)	Meaning
SSUSRTOK (0)	Valid request.
SSUSNOUS (4)	Invalid destination.
SSUSINCP (8)	Subsystem could not complete the validity check or conversion.

SSUS Contents: Various fields can be output fields depending on which conversion was requested:

Field Name	Description
SSUSDEST	Destination if SSUS2TO1 or SSUSITOC is set.
SSUSDST1	Destination part 1 if SSUS1TO2 is set.
SSUSDST2	Destination part 2 if SSUS1TO2 is set.
SSUSIDST	Internal destination if SSUSCTOI is set.
SSUSUDST	User destination if SSUSCTOI is set.

Verify Subsystem Function Call — SSI Function Code 15

The Verify Subsystem Function call (SSI function code 15) allows a user-supplied program to:

- Verify the existence of a specific subsystem
- Obtain the address of the SSCVT that corresponds to a specific subsystem
- Obtain the subsystem affinity index value used when making subsystem affinity requests.

Note:

1. The subsystem index value is valid only for use on the MVS processor on which it was obtained and only during the current IPL.
2. A valid subsystem affinity index value is returned only for subsystems defined through the methods described in "Defining Your Subsystem" on page 464.

For more information, see "Maintaining Information About the Callers of Your Subsystem" on page 483.

Type of Request

Directed SSI call.

Issued to

Master subsystem.

Related SSI Codes

None.

Related Concepts

You need to understand the subsystem affinity service. See “Maintaining Information About the Callers of Your Subsystem” on page 483 for more information.

Environment

The caller (issuer of the IEFSSREQ macro) must include the following mapping macros:

- CVT
- IEFJESCT

Data areas commonly referenced are mapped by the following mapping macros. IBM recommends you include them in your program:

- IEFSSOBH
- IEFJSSIB
- IEFSSVS

The caller must meet the following requirements:

Caller variable	Caller value
Minimum Authorization	Problem state, any PSW key
Dispatchable unit mode	Task or SRB
AMODE	24-bit or 31-bit
Cross memory mode	PASN=HASN=SASN
ASC mode	Primary
Interrupt status	Enabled for I/O and external interrupts
Locks	No locks held
Control Parameters	The SSOB, SSIB, and SSVS control blocks can reside above or below 16 megabytes.
Recovery	The caller should provide an ESTAE-type recovery environment. See *z/OS MVS Programming: Assembler Services Guide* for more information on an ESTAE-type recovery environment.

Figure 6 on page 46 shows the environment at the time of the call for SSI function code 15.

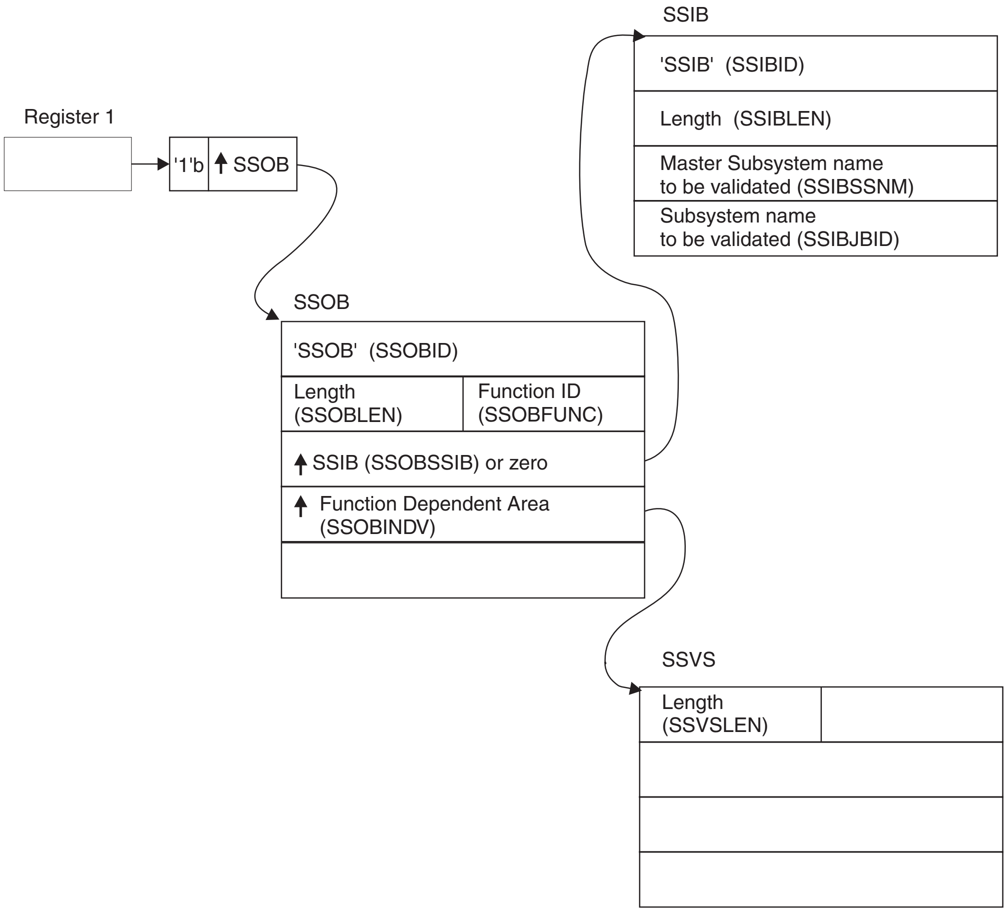

SSIB
'SSIB' (SSIBID)
Length (SSIBLEN)
Master Subsystem name to be validated (SSIBSSNM)
Subsystem name to be validated (SSIBJBID)
Register 1
'1'b
SSOB
SSOB
'SSOB' (SSOBID)
Length (SSOBLEN)
Function ID (SSOBFUNC)
SSIB (SSOBSSIB) or zero
Function Dependent Area (SSOBINDV)
SSVS
Length (SSVSLEN)

Figure 6. Environment at Time of Call for SSI Function Code 15

Input Register Information

Before issuing the IEFSSREQ macro, the caller must ensure that the following general purpose registers contain:

Register	**Contents**
1	Address of a 1-word parameter list that has the high-order bit on and a pointer to the SSOB control block in the low-order 31 bits.
13	Address of a standard 18-word save area

Input Parameters

Input parameters for the function routine are:

- SSOB
- SSIB
- SSVS

SSOB Contents: The caller sets the following fields in the SSOB control block on input:

Field Name
Description

SSOBID
Identifier 'SSOB'

SSOBLEN
Length of the SSOB (SSOBHSIZ) control block

SSOBFUNC
SSI function code 15 (SSOBVERS)

SSOBSSIB
Address of an SSIB control block or zero (if this field is zero, the life-of-job SSIB is used). See “Subsystem Identification Block (SSIB)” on page 8 for more information on the life-of-job SSIB.

SSOBINDV
Address of the function dependent area (SSVS control block)

Set all other fields in the SSOB control block to binary zeros before issuing the IEFSSREQ macro.

SSIB Contents: If you don't use the life-of-job SSIB, the caller must provide an SSIB and set the following fields in the SSIB control block on input:

Field Name
Description

SSIBID
Identifier 'SSIB'

SSIBLEN
Length of the SSIB (SSIBSIZE) control block

SSIBSSNM
Subsystem name — name of the subsystem that this verify subsystem function call is directed to (MSTR).

SSIBJBID
Name of the subsystem to be verified

Note: This is an 8-character field. Because subsystem names can only be 1-4 characters, the subsystem name specified should be left-justified and padded to the right with blank (X'40') characters.

Set all other fields in the SSIB control block to binary zeros before issuing the IEFSSREQ macro.

SSVS Contents: The caller sets the following fields in the SSVS control block on input:

Field Name
Description

SSVSLEN
Length of the SSVS (SSVSSIZE) control block

Set all other fields in the SSVS control block to binary zeros before issuing the IEFSSREQ macro.

Output Register Information

When control returns to the caller, the general purpose registers contain:

Register	**Contents**
0	Used as a work register by the system
1	Address of the SSOB control block
2 — 13	Same as on entry to call
14	Return address
15	Return code

Return Code Information

The SSI places one of the following decimal return codes in register 15. Examine the return code to determine if the request was processed.

Return Code (Decimal)	**Meaning**
SSRTOK (0)	The Verify Subsystem function call completed. Check the SSOBRETN field for specific function information.
SSRTNSUP (4)	The subsystem specified in the SSIBSSNM field does not support the Verify Subsystem function call.
SSRTNTUP (8)	The subsystem specified in the SSIBSSNM field exists, but is not active.
SSRTNOSS (12)	The subsystem specified in the SSIBSSNM field is not defined to MVS.
SSRTDIST (16)	The pointer to the SSOB control block or the SSIB control block is not valid, or the function code specified in the SSOBFUNC field is greater than the maximum number of functions supported by the subsystem specified in the SSIBSSNM field.
SSRTLERR (20)	Either the SSIB control block or the SSOB control block has incorrect lengths or formats.
SSRTNSSI(24)	The SSI has not been initialized.

Output Parameters

Output parameters for the function routine are:

- SSOBRETN
- SSVS

SSOBRETN Contents: When control returns to the caller and register 15 contains a zero, the verify subsystem function places one of the following decimal values in the SSOBRETN field indicating whether the subsystem name in the SSIBJBID field is valid:

Value (Decimal)	**Meaning**
SSVSNAM (0)	Valid subsystem name

SSVSJBNM (4)
The name in the SSIBJBID field is not the name of a defined subsystem.

SSVS Contents: The SSVS control block contains the following information if a valid subsystem name was specified:

Field Name	Description
SSVSSCTP	Pointer to the subsystem's SSCVT.
SSVSNUM	The subsystem affinity index value that you can use in a SSAFF macro request. See "Maintaining Information About the Callers of Your Subsystem" on page 483 for more information on the SSAFF macro.

Request Job ID Call — SSI Function Code 20

The Request Job ID call (SSI function code 20) allows an authorized address space to establish a job structure. Once the caller receives a job ID, the address space can use JES services.

Type of Request

Directed SSI call.

Use Information

The following are a few examples of how a program running in an address space started under the master subsystem can, once it has obtained a job ID, use the primary subsystem (JES) services:

- Allocate an internal reader to submit jobs that run under JES. See *z/OS MVS Programming: Assembler Services Guide* for more information on the internal reader.
- Allocate a SYSOUT data set (SSI function code 1) so that the program can retrieve a data set after using SSI function code 1.

While the address space might have been started under the master subsystem before JES initialization, the Request Job ID SSI call is honored only after JES is initialized.

Because the address space was not started under JES control, JES does not have an internal job structure for the address space. Use of SSI function code 20 establishes the necessary structure so that subsequent requests for JES services for that address space may be performed properly.

Issued to

A JES, typically the primary subsystem. In a JES2 environment, the call may be made to both the primary JES2 as well as any secondary JES2. It is even possible to request job IDs from both a primary JES2 and a secondary JES2 at the same time, though each job ID requires a separate IEFSSREQ call.

Related SSI Codes

Issue the Return Job ID call (SSI function code 21) after the Request Job ID call so that additional Request Job ID calls can be made.

Related Concepts

You need to understand:

- JES2 can issue ENF (event notification facility) signal 40 during initialization or orderly termination to communicate the fact that JES2 has initialized, or is ending.
- JES3 issues ENF signal 40 during initialization or when the JES3 address space is ending (regardless of orderly shutdown or abnormal termination).
- Issue the Return Job ID call (SSI function code 21) to "disconnect" from JES and return the job ID that was obtained with SSI function code 20.
- When JES2 processes the Request Job ID call from a task started under the master subsystem, some of the attributes of this task will be defined by the JOBCLASS(STC) initialization statement. Specifically, the value defined on the MSGCLASS parameter determines if the joblog output produced from the SSI function code 20 job is suppressed. In this example, you must define the MSGCLASS parameter of the JOBCLASS(STC) initialization statement so that the class has a disposition of purge. Note that changing the MSGCLASS value may produce an undesirable effect on other started tasks in your system.

Environment

The caller (issuer of the IEFSSREQ macro) must include the following mapping macros:

- CVT
- IEFJESCT

Data areas commonly referenced are mapped by the following mapping macros. IBM recommends you include them in your program:

- IEFSSOBH
- IEFJSSIB
- IEFSSRR

The caller must meet the following requirements:

Caller variable	Caller value
Minimum Authorization	Supervisor state
Dispatchable unit mode	Task
AMODE	24-bit or 31-bit
Cross memory mode	PASN=HASN=SASN
ASC mode	Primary
Interrupt status	Enabled for I/O and external interrupts
Locks	No locks held
Control Parameters	The SSOB, SSIB, and SSRR control blocks can reside in storage above 16 megabytes.
Recovery	The caller should provide an ESTAE-type recovery environment. See *z/OS MVS Programming: Authorized Assembler Services Guide* for more information on an ESTAE-type recovery environment.

Figure 7 on page 51 shows the environment at the time of the call for SSI function code 20.

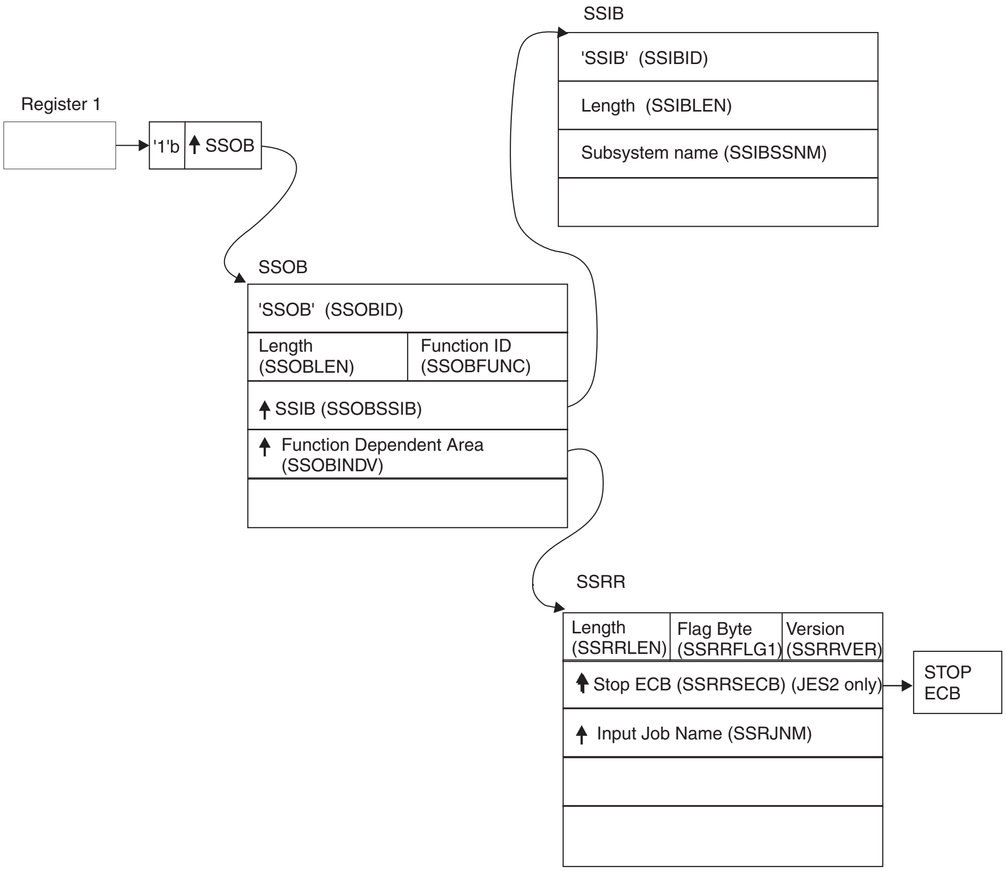
Register 1
'1'b
SSOB
SSIB
'SSIB' (SSIBID)
Length (SSIBLEN)
Subsystem name (SSIBSSNM)
SSOB
'SSOB' (SSOBID)
Length (SSOBLEN)
Function ID (SSOBFUNC)
SSIB (SSOBSSIB)
Function Dependent Area (SSOBINDV)
SSRR
Length (SSRRLEN)
Flag Byte (SSRRFLG1)
Version (SSRRVER)
Stop ECB (SSRRSECB) (JES2 only)
Input Job Name (SSRJNM)
STOP ECB

Figure 7. Environment at Time of Call for SSI Function Code 20

Input Register Information

Before issuing the IEFSSREQ macro, the caller must ensure that the following general purpose registers contain:

Register
Contents

1 Address of a 1-word parameter list that has the high-order bit on and a pointer to the SSOB control block in the low-order 31 bits.

13 Address of a standard 18-word save area.

Input Parameters

Input parameters for the function routine are:

- SSOB
- SSIB
- SSRR

SSOB Contents: The caller of the function code sets the following fields in the SSOB control block on input:

Field Name
Description

SSOBID
Identifier 'SSOB'

SSOBLEN
Length of the SSOB (SSOBHSIZ) control block

SSOBFUNC
SSI function code 20 (SSOBRQST)

SSOBSSIB
Address of an SSIB control block

SSOBINDV
Address of the function dependent area (SSRR control block)

Set all other fields in the SSOB control block to binary zeros before issuing the IEFSSREQ macro.

SSIB Contents: The caller of the function code sets the following fields in the SSIB control block on input:

Field Name
Description

SSIBID
Identifier 'SSIB'

SSIBLEN
Length of the SSIB (SSIBSIZE) control block

SSIBSSNM
Subsystem name — name of the subsystem to which this Request Job ID call is directed.

It is usually the primary JES, or in the case of JES2, a possible secondary JES.

Set all other fields in the SSIB control block to binary zeros before issuing the IEFSSREQ macro.

SSRR Contents: The caller of the function code sets the following fields in the SSRR control block on input:

Field Name
Description

SSRRLEN
Length of the SSRR (SSRRSIZE) control block

SSRRFLG1
Flag byte

The caller of this function code can set one or more of the following bits:

- **SSRRUASC**

  If SSRRUASC is set, JES assigns the JES-provided job name to the job found in the ASCB control block as follows:
  1. Started task from the ASCBJBNS field, if the job is running as a started task, MOUNT, or LOGON.
  2. Batch job from the ASCBJBNI field, if the job is running as a batch job or APPC transaction program.
- **SSRRJNMP**

  If SSRRJNMP is set, JES uses the user-provided jobname in the SSRRJNM field.

Note: The caller can set either the SSRRUASC bit or the SSRRJNMP bit, but not both.

- **SSRRJOBL**

  If SSRRJOBL is set, JES explicitly creates a joblog.
- **SSRRNJBL**

  If SSRRNJBL is set, JES does not explicitly create a joblog.

  Note: JES explicitly creates a joblog by default when neither the SSRRJOBL bit nor the SSRRNJBL bit is set. Note that the caller cannot set both the SSRRJOBL bit and the SSRRNJBL bit.

SSRRVER

Version of mapping for the caller. Set this field to SSRRCVER (an IBM-defined integer constant within the SSRR control block).

SSRRSECB

For JES2 only, contains the pointer to a caller-supplied ECB. When JES2 posts this ECB, JES2 is ending. In response, issue the Return Job ID call (SSI function code 21). Normal $PJES2 processing will hang if the application does not issue this call. JES2 will also issue message HASP715 when the proper Return Job ID call is not made in a timely manner to alert the operator of a Return Job ID call being needed.

Note: Do not rely on this ECB always being posted during the ending of JES2. JES2 can also end abnormally.

SSRRJNM

An optional job name to be used for this job. The name is left-justified and padded to the right with blank (X'40') characters. JES uses this name as the job name if the caller set the SSRRJNMP bit in the SSRRFLG1 flag byte, as described earlier.

Set all other fields in the SSRR control block to binary zeros before issuing the IEFSSREQ macro.

Output Register Information

When control returns to the caller, the general purpose registers contain:

Register	**Contents**
0	Used as a work register by the system
1	Address of the SSOB control block
2 — 13	Same as on entry to call
14	Return address
15	Return code

Return Code Information

The SSI places one of the following decimal return codes in register 15. Examine the return code to determine if the request was processed.

Return Code (Decimal)

Meaning

SSRTOK (0)
The Request Job ID call completed. Check the SSOBRETN field for specific function information.

SSRTNSUP (4)
The subsystem specified in the SSIBSSNM field does not support this function.

SSRTNTUP (8)
The subsystem specified in the SSIBSSNM field exists, but is not active.

SSRTNOSS (12)
The subsystem specified in the SSIBSSNM field is not defined to MVS.

SSRTDIST (16)
The pointer to the SSOB control block or the SSIB control block is not valid, or the function code specified in the SSOBFUNC field is greater than the maximum number of functions supported by the subsystem specified in the SSIBSSNM field.

SSRTLERR (20)
Either the SSIB control block or the SSOB control block has invalid lengths or formats.

SSRTNSSI(24)
The SSI has not been initialized.

Output Parameters

Output parameters for the function routine are:

- SSIB
- SSOBRETN
- SSRRJCRP

SSIB Contents: The SSIB control block contains:

- The JES name (supplied by the user on input)
- The 8-character returned job ID
- The subsystem use value (contained in the SSIBSUSE field-JES3 only)

The subsystem name (SSIBSSNM), returned job ID (SSIBJBID) and subsystem use value (SSIBSUSE-JES3 only) must be used on subsequent IEFSSREQ calls to the appropriate JES for subsequent services.

SSOBRETN Contents: When control returns to the caller and register 15 contains a zero, the SSOBRETN field contains one of the following decimal values:

Value (Decimal)
Meaning

SSRROK (0)
Successful completion. JES assigned a job ID to the caller. The job ID is available in the SSIBJBID field. See “Restrictions” on page 55 for information on the processing that takes place after successful completion has been obtained.

SSRRFAIL (4)
The Request Job ID call did not successfully complete.

This can happen if JES is in the process of ending, and therefore cannot return job IDs.

This caller cannot make use of subsequent JES services.

SSRRFREQ (8)
The Request Job ID call is already known to this JES, and may not have a second job ID established.

SSRRNOEC (16)
For JES2 only, an ECB was not supplied through the SSRRSECB pointer field on the Request Job ID call.

SSRRPRME (20)
There is an error in the SSRR data area. For example, both the SSRRJOBL bit and the SSRRNJBL bits may be set.

SSRRPERR (36)
The JES processing this call has returned a program error. This can happen if the JES does not have enough virtual storage available to create either the job structure or other control blocks for the requesting address space.

SSRRJCRP Contents: The SSRJCRP field is a 4-byte pointer to the job correlator for the associated job. The job correlator is stored in the Subsystem Job Block Extension (SJXB) in field SJXJCOR.

Restrictions

For both JES2 and JES3, the following restrictions apply to the caller issuing the Request Job ID call:

- Cannot receive multiple job IDs for different tasks running in the same address space, because the job ID is associated with an address space.
- Can only make one Request Job ID call, unless a Return Job ID call is done, to the same JES, in which case another Request Job ID call can be made.

  Note: The returned job ID will probably not be the job ID that was previously received.
- Must use the subsystem name that was used in the Request Job ID in the SSIB control block (for IEFSSREQ) or in the DALSSREQ text unit (for DYNALLOC) for any subsequent service request.

  This name uniquely identifies the appropriate receiving JES, either primary (JES2 or JES3), or secondary (JES2 only).

For JES2 only, the following restriction applies to the caller issuing the Request Job ID call:

- Must use different SSIB control blocks to direct more than one Request Job ID call to multiple (and different) JES2 subsystems simultaneously. This restriction applies only when more than one JES2 is running (that is, when there are additional secondary JES2 subsystems).

Considerations When Using the Automatic Restart Manager

If a program registers with the automatic restart manager before requesting a job ID, the automatic restart manager will not associate the program with JES. If a system failure occurs, the automatic restart manager can restart the program on any system in the sysplex, possibly one in a different JES2 multi-access spool configuration (MAS) or JES3 complex from where the program was running before the system failure. The program cannot depend on access to jobs or output it created in the original MAS or complex.

If a program registers with the automatic restart manager after requesting a job ID, the automatic restart manager will associate the program with JES. If a system failure occurs, the automatic restart manager can restart the program on any member in the same MAS or complex. If the program requests job IDs from more than one JES, the automatic restart manager uses the JES from the first request.

Return Job ID Call — SSI Function Code 21

The Return Job ID call (SSI function code 21) allows an authorized address space to return to JES the job structure that was obtained by invoking the Request Job ID call (SSI function code 20).

Once the caller returns the job ID, that address space may no longer use JES services (on behalf of this particular job ID) unless a Request Job ID SSI call is made again.

Type of Request

Directed SSI call.

Use Information

A program uses this request to give back to JES the job ID that it received from a previous Request Job ID call (SSI function code 20). The caller issues the Return Job ID call (SSI function code 21) when the address space determines that it no longer needs JES services.

Issued to

A JES, typically the primary subsystem. In a JES2 environment, the call may be made to both the primary JES2 as well as any secondary JES2 subsystems, when services from either subsystems have been obtained through a previous Request Job ID call (SSI function code 20).

Related SSI Codes

The Request Job ID call (SSI function code 20) must be used to obtain the job ID supplied by JES before the caller can request the Return Job ID call.

Related Concepts

You need to understand the Request Job ID call (SSI function code 20).

Environment

The caller (issuer of the IEFSSREQ macro) must include the following mapping macros:

- CVT
- IEFJESCT

Data areas commonly referenced are mapped by the following mapping macros. IBM recommends you include them in your program:

- IEFSSOBH
- IEFJSSIB
- IEFSSRR

The caller must meet the following requirements:

Caller variable	**Caller value**
Minimum Authorization	Supervisor state
Dispatchable unit mode	Task
AMODE	24-bit or 31-bit
Cross memory mode	PASN=HASN=SASN
ASC mode	Primary

Caller variable	Caller value
Interrupt status	Enabled for I/O and external interrupts
Locks	No locks held
Control Parameters	The SSOB, SSIB, and SSRR control blocks can reside in storage above 16 megabytes.
Recovery	The caller should provide an ESTAE-type recovery environment. See *z/OS MVS Programming: Authorized Assembler Services Guide* for more information on an ESTAE-type recovery environment.

Figure 8 shows the environment at the time of the call for SSI function code 21.

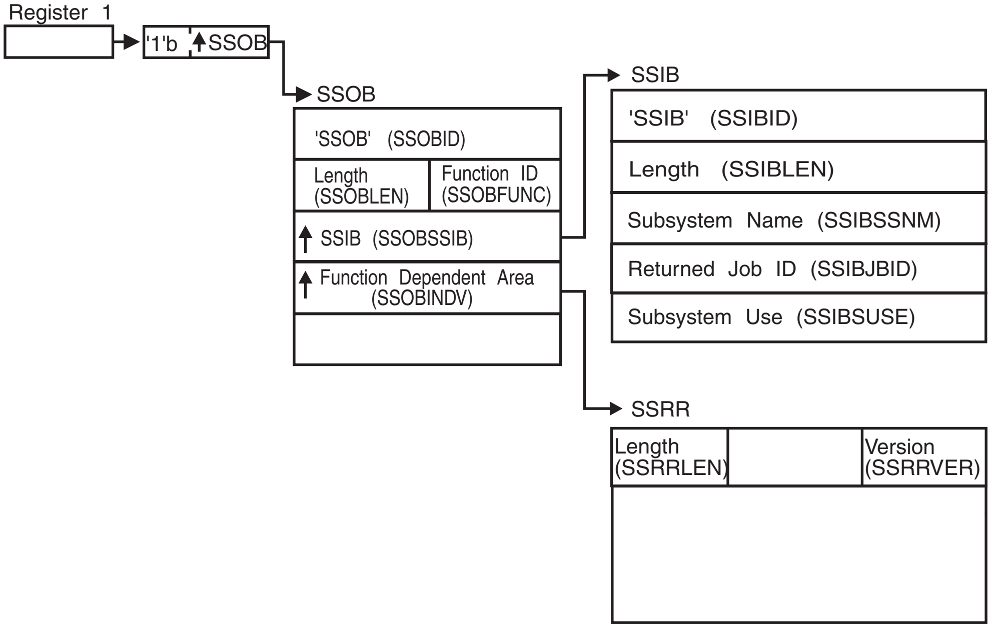
Register 1
'1'b
SSOB
SSOB
'SSOB' (SSOBID)
Length (SSOBLEN)
Function ID (SSOBFUNC)
SSIB (SSOBSSIB)
Function Dependent Area (SSOBINDV)
SSIB
'SSIB' (SSIBID)
Length (SSIBLEN)
Subsystem Name (SSIBSSNM)
Returned Job ID (SSIBJBID)
Subsystem Use (SSIBSUSE)
SSRR
Length (SSRRLEN)
Version (SSRRVER)

Figure 8. Environment at Time of Call for SSI Function Code 21

Input Register Information

Before issuing the IEFSSREQ macro, the caller must ensure that the following general purpose registers contain:

Register	Contents
1	Address of a 1-word parameter list that has the high-order bit on and a pointer to the SSOB control block in the low-order 31 bits.
13	Address of a standard 18-word save area.

Input Parameters

Input parameters for the function routine are:

- SSOB
- SSIB
- SSRR

SSOB Contents: The caller sets the following fields in the SSOB control block on input:

Field Name
Description

SSOBID
Identifier 'SSOB'

SSOBLEN
Length of the SSOB (SSOBHSIZ) control block

SSOBFUNC
SSI function code 21 (SSOBRTRN)

SSOBSSIB
Address of an SSIB control block

SSOBINDV
Address of the function dependent area (SSRR control block)

Set all other fields in the SSOB control block to binary zeros before issuing the IEFSSREQ macro.

SSIB Contents: The caller sets the following fields in the SSIB control block on input:

Field Name
Description

SSIBID
Identifier 'SSIB'

SSIBLEN
Length of the SSIB (SSIBSIZE) control block

SSIBSSNM
Subsystem name — name of the subsystem to which this Return Job ID call is directed.

This name identifies either the primary subsystem, or in the case of JES2, a secondary JES subsystem.

You must use the same subsystem name in this SSIBSSNM field as you used for the original Request Job ID call (SSI function code 20).

SSIBJBID
Returned job ID

You must use the job ID obtained during the previously issued Request Job ID call (SSI function code 20).

SSIBSUSE
(JES3 only) Subsystem use — the SSIBSUSE value that was returned upon completion of the Request Job ID call (SSI function code 20).

Set all other fields in the SSIB control block to binary zeros before issuing the IEFSSREQ macro.

SSRR Contents: The caller sets the following fields in the SSRR control block on input:

Field Name
Description

SSRRLEN
Length of the SSRR (SSRRSIZE) control block

SSRRVER
Version of mapping for the caller. Set this field to SSRRCVER (an IBM-defined integer constant within the SSRR control block).

Note: This SSRR control block can be the same SSRR control block that was provided on the original Request Job ID call (SSI function code 20). All of the fields except the SSRRLEN field and the SSRRVER field contain binary zeros.

Output Register Information

When control returns to the caller, the general purpose registers contain:

Register	Contents
0	Used as a work register by the system
1	Address of the SSOB control block
2 — 13	Same as on entry to call
14	Return address
15	Return code

Return Code Information

The SSI places the following decimal return codes in register 15. Examine the return code to determine if the request was processed.

Return Code (Decimal)	Meaning
SSRTOK (0)	The Return Job ID call completed. Check the SSOBRETN field for specific function information.
SSRTNSUP (4)	The subsystem specified in the SSIBSSNM field does not support this function.
SSRTNTUP (8)	The subsystem specified in the SSIBSSNM field exists, but is not active.
SSRTNOSS (12)	The subsystem specified in the SSIBSSNM field is not defined to MVS.
SSRTDIST (16)	The pointer to the SSOB control block or the SSIB control block is not valid, or the function code specified in the SSOBFUNC field is greater than the maximum number of functions supported by the subsystem specified in the SSIBSSNM field.
SSRTLERR (20)	Either the SSIB control block or the SSOB control block has invalid lengths or formats.
SSRTNSSI(24)	The SSI has not been initialized.

Output Parameters

Output parameters for the function routine are:

- SSIB
- SSOBRETN

SSIB Contents: The SSIB control block no longer contains a valid job ID on output. If this address space needs subsequent JES services, issue the Request Job ID call (SSI function code 20) again.

SSOBRETN Contents: When control returns to the caller and register 15 contains a zero, the SSOBRETN field contains one of the following decimal values:

Value (Decimal)
  Meaning

SSRROK (0)
  Successful completion. The caller's job ID was returned to JES. This address space is not available to JES services unless a subsequent Request Job ID call (SSI function code 20) obtains a new job ID.

SSRRFRET (12)
  The Return Job ID call cannot return a job ID to JES because a Request Job ID call (SSI function code 20) was not made.

  The job ID is not returned.

SSRRPERR (36)
  The JES processing this call has returned a program error. An error can occur if the job ID returned failed internal JES validation, or if JES does not have enough virtual storage for a work area.

Request Subsystem Version Information Call — SSI Function Code 54

The Request Subsystem Version Information Call (SSI function code 54) provides a requesting program the ability to obtain version-specific information about a particular subsystem.

Type of Request

Directed SSI call.

Use Information

A caller issues SSI function code 54 to obtain the following information about a particular subsystem:

- Product function modification identifier (FMID)
- Product version number
- Subsystem common name (such as 'JES2')
- Network node name
- JES system member name
- Whether the subsystem supports the following functions:
  - Dynamic output
  - Restarting of initiators
  - Dynamic allocation of multiple started task (STC) and TSO/E internal readers.
  - Client print

Note that 4-digit device numbers are supported.

Issued to

- Master
- JES2/JES3

- User-supplied or vendor-supplied subsystem.

Related SSI Codes

None.

Related Concepts

You need to understand:

- ENF (event notification facility) signal 40

  JES2 can issue ENF signal 40 during initialization or orderly termination to communicate the fact that JES2 has initialized, or is ending.

  JES3 issues ENF signal 40 during initialization or when the JES3 address space is terminating (regardless of orderly shutdown or abnormal termination).

  You might need to know when JES is initializing or ending when using SSI function code 54 to obtain **relatively static** (information that is not likely to change between restarts) information about a JES subsystem. If JES ends and is restarted with a new level, or with a different functional capability, you will need to reissue this SSI request to obtain information about the new capabilities of JES. During initialization or orderly termination, JES issues event notification facility (ENF) signal 40, for which authorized callers can listen. For information about how programs can listen for ENF signals, see the description of using the ENFREQ macro in *z/OS MVS Programming: Authorized Assembler Services Guide*. Note that the users of ENFREQ must be authorized.
- The caller issues the IEFSSREQ with the SSVI control block used as input. The information that the subsystem returns will be contained within four sections of the SSVI control block.
  - Fixed header input section

    The user provides this information before issuing IEFSSREQ. This information is explained “Fixed Header Input Section” on page 63.
  - Fixed header output section

    Information returned by all called subsystems is returned in this section. This information is explained “Fixed Header Output Section” on page 66.
  - Installation variable output section (JES)

    Installations can supply their own keywords, or override one or more keywords returned in the system variable output section. This information is explained “Installation Variable Output Section” on page 68.
  - System variable output section

    The called subsystem returns subsystem-specific information in the form of keyword value specifications. This information is explained “System Variable Output Section” on page 68.

Environment

The caller (issuer of the IEFSSREQ macro) must include the following mapping macros:

- CVT
- IEFJESCT

Data areas commonly referenced are mapped by the following mapping macros. IBM recommends you include them in your program:

- IEFSSOBH
- IEFJSSIB
- IEFSSVI

The caller must meet the following requirements:

Caller variable	Caller value
Minimum Authorization	Problem state, any PSW key
Dispatchable unit mode	Task
AMODE	24-bit or 31-bit
Cross memory mode	PASN=HASN=SASN
ASC mode	Primary
Interrupt status	Enabled for I/O and external interrupts
Locks	No locks held
Control Parameters	The SSOB, SSIB, and SSVI control blocks can reside in storage above 16 megabytes.
Recovery	The caller should provide an ESTAE-type recovery environment. See *z/OS MVS Programming: Assembler Services Guide* for more information on an ESTAE-type recovery environment.

Figure 9 shows the environment at the time of the call for SSI function code 54.

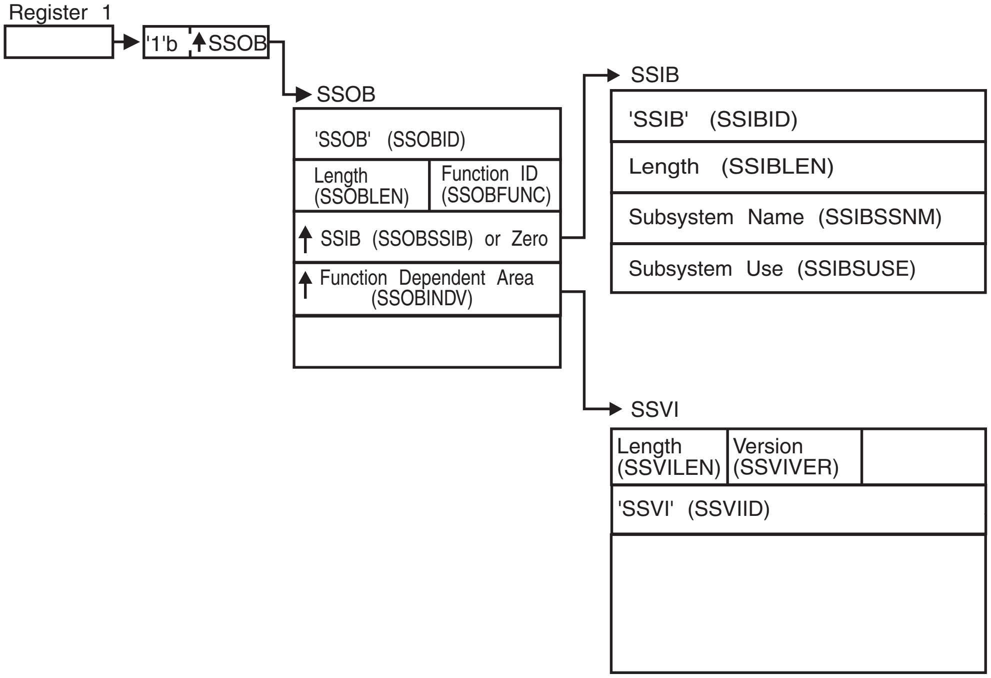
Register 1
'1'b
SSOB
SSOB
'SSOB' (SSOBID)
Length (SSOBLEN)
Function ID (SSOBFUNC)
SSIB (SSOBSSIB) or Zero
Function Dependent Area (SSOBINDV)
SSIB
'SSIB' (SSIBID)
Length (SSIBLEN)
Subsystem Name (SSIBSSNM)
Subsystem Use (SSIBSUSE)
SSVI
Length (SSVILEN)
Version (SSVIVER)
'SSVI' (SSVIID)

Figure 9. Environment at Time of Call for SSI Function Code 54

Input Register Information

Before issuing the IEFSSREQ macro, the caller must ensure that the following general purpose registers contain:

Register	Contents
1	Address of a 1-word parameter list that has the high-order bit on and a pointer to the SSOB control block in the low-order 31 bits.
13	Address of a standard 18-word save area.

Input Parameters

Input parameters for the function routine are:

- SSOB

- SSIB
- SSVI

SSOB Contents: The caller sets the following fields in the SSOB control block on input:

Field Name
Description

SSOBID
Identifier 'SSOB'

SSOBLEN
Length of the SSOB (SSOBHSIZ) control block

SSOBFUNC
SSI function Code 54 (SSOBSSVI)

SSOBSSIB
Address of the SSIB control block or zero (if this field is zero, the life-of-job SSIB is used). See “Subsystem Identification Block (SSIB)” on page 8 for more information on the life-of-job SSIB.

SSOBINDV
Address of the function dependent area (SSVI control block)

Set all other fields in the SSOB control block to binary zeros before issuing the IEFSSREQ macro.

SSIB Contents: If you don't use the life-of-job SSIB, the caller must provide an SSIB and set the following fields in the SSIB control block on input:

Field Name
Description

SSIBID
Identifier 'SSIB'

SSIBLEN
Length of the SSIB (SSIBSIZE) control block

SSIBSSNM
Subsystem name — name of the subsystem to which this Request Subsystem Version Information call is directed.

It is either the master subsystem, a JES2 (primary or secondary) subsystem, a JES3 subsystem, or a user-supplied or vendor-supplied subsystem.

Set all other fields in the SSIB control block to binary zeros before issuing the IEFSSREQ macro.

SSVI Contents: The input information in the SSVI control block is contained in the following area mapped within the SSVI control block:

- Fixed header input section

The caller sets these fields before issuing the IEFSSREQ macro.

Fixed Header Input Section

The fixed header input section contains the information that the caller needs to provide to the subsystem on input for this Request Subsystem Version Information call.

Field Name
Description

SSVILEN
Length of entire area — Set this field to a value that is at least equal to the value of SSVIMSIZ (a constant contained within the SSVI control block).

The length includes the fixed header section, plus the system variable section and the installation variable section. The caller must ensure that the length specified in the SSVILEN field is large enough to contain the requested information.

SSVIVER
Version of mapping for the caller — Set this field to SSVICVER (an IBM-defined integer constant within the SSVI control block).

SSVIID
Identifier 'SSVI'

Set all other fields in the SSVI control block to binary zeros before issuing the IEFSSREQ macro.

Output Register Information

When control returns to the caller, the general purpose registers contain:

Register	Contents
0	Used as a work register by the system
1	Address of the SSOB control block
2 — 13	Same as on entry to call
14	Return address
15	Return code

Return Code Information

The SSI places one of the following return codes in register 15. Examine the return code to determine if the request was processed.

Return Code (Decimal)
Meaning

SSRTOK (0)
Successful completion. The subsystem request completed. Check field SSOBRETN for specific function information.

SSRTNSUP (4)
The subsystem specified in the SSIBSSNM field does not support this function.

SSRTNTUP (8)
The subsystem specified in the SSIBSSNM field exists, but is not active.

SSRTNOSS (12)
The subsystem specified in the SSIBSSNM field is not defined to MVS.

SSRTDIST (16)
The pointer to the SSOB control block or the SSIB control block is not

valid, or the function code specified in the SSOBFUNC field is greater than the maximum number of functions supported by the subsystem specified in the SSIBSSNM field.

SSRTLERR (20)
The SSIB control block or SSOB control block has invalid lengths or formats.

SSRTNSSI(24)
The SSI has not been initialized.

Output Parameters

Output parameters for the function routine are:

- SSOBRETN
- SSVI

SSOBRETN Contents: When control returns to the caller, the SSOBRETN field contains one of the following decimal values if general purpose register 15 was zero:

Value (Decimal)
Description

SSVIOK (0)
Successful completion. The requested information was returned. See the SSVI control block section description below for the specific format of the returned information.

SSVINSTR (8)
The requesting application did not provide a storage area large enough to contain the requested information. The SSVIRLEN field indicates the total amount of storage this request requires to complete successfully.

When you receive this return code, obtain the appropriate amount of storage for a new IEFSSVI mapping macro by using the value returned in the SSVIRLEN field. Then, resubmit the request and set the SSVILEN field to the new storage size obtained from the SSVIRLEN field from the previous request.

SSVIPARM (16)
The SSVI data area contains one or more of the following parameter errors:

- SSOBINDV (in the SSOB control block) did not contain the address of a valid SSVI control block
- SSVIID did not contain 'SSVI'
- SSVIVER did not specify a valid version of the SSVI control block
- SSVILEN contained a value that is less than the value of SSVIMSIZ (an IBM-defined integer constant within the SSVI control block).

When you receive this return code, fix the problem and resubmit the request.

SSVIABLG (24)
An abend or logical error was encountered within the called subsystem's function code routine.

When you receive this return code, search the problem report databases for a fix to the problem. If no fix exists, contact the IBM support center.

SSVI Contents: The output information returned in the SSVI control block is contained in one or more of the following areas mapped within the SSVI control block:

- Fixed header output section
- System variable output section
- Installation variable output section

Each of these areas is described in order, followed by a description of the format of the two variable output sections.

Fixed Header Output Section

The fixed header output section contains information that the called subsystem returns to the requesting program. The called subsystem sets all fields, although they may be binary zeros.

The following shows how the master and JES subsystems set the contents of the fixed header output section:

Field Name
Description

SSVIRLEN
A 2-byte binary field that contains either the length of the storage used (if the caller's request was successful), or the length of storage required (if the request failed because the caller did not specify enough storage).

To determine whether the SSVIRLEN field contains returned or required storage, check the return code in SSOBRETN, which indicates:

Decimal Value
Meaning

SSVIOK (0)
Request was successful. The SSVIRLEN field contains the length, in bytes, of the returned data.

SSVINSTR (8)
Request failed. The caller did not specify enough storage in the SSVIRLEN field. The SSVIRLEN field contains the amount of storage, in bytes, the subsystem requires to return the requested information.

Note that this field is not set when the SSOBRETN field contains return code SSVIPARM (16) or SSVIABLG (24).

SSVIRVER
A 1-byte binary field that contains the version of the SSVI control block used by the subsystem. When the caller's version of the SSVI control block does not match the version used by the called subsystem, the subsystem returns information based on the older of the two versions of the SSVI control block.

SSVIFLEN
A 2-byte integer field that contains the length of the fixed header output section of the SSVI control block the subsystem uses.

SSVIASID
A 2-byte binary field that indicates the ASID of the subsystem. A value of

X'FFFF' indicates that the address space abended. This field contains valid information only if the caller-supplied version in field SSVIVER is greater than or equal to 2.

SSVIVERS
An 8-byte character field that specifies the version of the subsystem. For example, JES returns: SP 5.1.0, SP 5.2.1, OS 1.1.0, OS 2.10, z/OS 1.4, or z/OS 1.9. The master subsystem returns the same value as that contained in CVTPRODN.

SSVIFMID
An 8-byte character field that specifies the FMID of the subsystem (for example, HBB5510, HJE5510, HJS5511, HJE7730, HJS7730, or HBB7730).

SSVICNAM
An 8-byte character field that is left-justified, and padded to the right with blanks and contains the common name of the subsystem. For example, in a poly-JES environment, the secondary JES2 subsystem (for example, JESA) returns: 'JES2'.

The master subsystem of an MVS system returns: 'MASTER'.

SSVIPLVL
This 1-byte field contains either zero or a value that indicates the relative subsystem product level. For example, with either JES, the relative subsystem product level value will increase by at least one for each subsequent release of the subsystem. For z/OS Release 7 JES2, the relative subsystem product level value is decimal '36'. For more information, see topic “Determining the JES2 Release Level” in *z/OS JES2 Installation Exits*. For JES3 SP 3.1.2, the relative subsystem product level value is decimal '1' and for OS/390® Release 1 JES3, the relative subsystem product level value is decimal '6'. For more information, see topic “Determining the JES3 Release Level” in *z/OS JES3 Customization*.

This field contains valid information only if the caller-supplied version in field SSVIVER is greater than or equal to 2.

SSVISLVL
This 1-byte field indicates the relative service level of the subsystem and contains either zero or the service level of the subsystem. The JES2 relative service level is set to zero for each new product level and will increase by at least one each time significant maintenance or function is added within a release. The JES3 service level can increase by at least one each time significant maintenance or function is added and is maintained across new releases. For additional information concerning this field, see *z/OS JES2 Installation Exits* or *z/OS JES3 Customization*.

This field contain valid information only if the caller-supplied version in field SSVIVER is greater than or equal to 2.

SSVIUDOF
A 4-byte integer field that contains the offset from the start of the IEFSSVI DSECT, to the start of the installation variable output data section. The subsystem sets this field to zero if there is no installation variable output data section.

SSVISDOF
A 4-byte integer field that contains the offset from the start of the SSVI control block, to the start of the system variable output data section. The subsystem sets this field to zero if there is no system variable output data section.

System Variable Output Section

The system variable output section contains subsystem-specific information as keyword values. For more information see "Format of the Variable Output Sections."

The called subsystem's function routine can return keyword values to SSI function code 54 callers in the system variable output section, and, optionally for JES, the installation variable output section (defined through JES2 Exit 24, or through JES3 via IATUX63). The subsystem's function routine returns two offsets, SSVIUDOF and SSVISDOF, in the fixed header output section. Both are offsets from the start of the SSVI control block to the beginning of their corresponding data area. To indicate that an output section does not exist, the subsystem's function routine sets the offset value to zero. Each data area contains a 2-byte length field, which itself is not included in the length of the string.

Installation Variable Output Section

Installations can use the installation variable output data section to define their own keywords, or override one or more of the keyword values returned by the called subsystem in the system variable output section. The installation variable output data section has the same format as the system variable output data section. For more details see "Format of the Variable Output Sections."

Installations can specify their own keyword values to be returned in the installation variable output section (through JES2 Exit 24 or JES3 via IATUX63). For more information about using JES2 Exit 24, see *z/OS JES2 Installation Exits*. For more information about using JES3 IATUX63, see *z/OS JES3 Customization*.

Format of the Variable Output Sections

The following is a description of the subsystem and installation variable output sections:

Field Name	**Description**
SSVIVLEN	A 2-byte signed hexadecimal field that contains the length of the variable output data string. The length of this field is not included in the length of the string.
SSVIDAT	A variable length character string (its length is set through SSVIVLEN) that contains a set of keywords and their respective values. When master (MSTR) or JES is the called subsystem, any, all or none of the keyword values shown in Table 1 on page 69 are returned to the SSI code 54 caller.

Procedure of Searching Data Strings: When searching the variable output data strings, IBM recommends that installations have their SSI code 54 callers search the installation variable output section, if one exists, before searching the system variable output section. (The callers would use the first instance of a searched for keyword.) By following this procedure, the installation can add its own values to those returned by the SSI, and override the system values, without actually changing the information in the system variable output section.

IBM-Defined Keywords: The following table shows the IBM-defined keywords that can be returned in the variable-length character string:

Table 1. IBM-Defined Keywords

Keyword	Explanation
,AUTO_RESTART_MANAGER='YES|NO'	Indicates whether the subsystem supports using the automatic restart manager.
,CLIENT_PRINT='YES'	Indicates that the JES supports the creation of a client token in support of client printing.
,COMMAND_PREFIX='*prefix*'	Indicates the operator command prefix that is registered for this subsystem. For JES2, this is the value of **CONDEF CONCHAR**=. JES3 supplies the first system scoped synonym.
,DYNAMIC_OUTPUT='YES|NO'	Indicates whether the subsystem supports the dynamic output feature.
,EXW_SYSOUT_CLASS='*classes*'	Indicates the SYSOUT class for which output is placed on the HOLD queue and is held for external writers. (See note.) This keyword is not applicable to JES2.
,FOUR_DIGIT_DEVNUMS='YES|NO'	Indicates whether the subsystem supports 4-digit device numbers.
,GLOBAL_PLEVEL='mmm'	The JES3 global product level in decimal EBCDIC digits. (JES3 only).
,GLOBAL_SLEVEL='mmm'	The JES3 global service level in decimal EBCDIC digits. (JES3 only).
,GLOBAL_RELEASE='release'	The JES3 release running on the JES3 Global. (JES3 only.)
,GLOBAL='system name'	The system name of the JES3 Global. (JES3 only).
,INITIATOR_RESTART='YES|NO'	Indicates whether the subsystem supports the restarting of initiators.
,JES_NODE=*'name'*	Specifies the network node name of the JES.
,JES_MEMBERNAME=*'name'*	Specifies the member name of a particular JES2 in a multi-JES configuration or the JES3 main name in a JES3 complex.
MULT_CHAR_JOBCLASS=YES|NO|UNSP	**YES** indicates that one or more 2-8 character job classes are defined on the MAS. **NO** indicates that the MAS supports 2-8 character job classes, but none are defined. **UNSP** indicates that 2-8 character job classes are not currently supported, because an active member of the MAS is running a z/OS version earlier than 2.1.
,MULTIPLE_STCTSO='YES|NO'	Indicates whether the subsystem supports dynamic allocation of multiple started task (STC) and TSO/E internal readers.
,PLEXSYN='list of plex synonyms'	The list of sysplex scoped command prefix synonyms from the CONSTD PLEXSYN= definition. (JES3 only.)
,SAPI_CHARS='NO'	Indicates selection by characters not supported.
,SAPI_IP_SELECT='NO'	Indicates selection by IP address (Internet protocol) not supported.

Table 1. IBM-Defined Keywords (continued)

Keyword	Explanation
,SAPI_MOD_SELECT='NO'	Indicates selection by modification id not supported.
,SAPI_PRTY_SELECT='NO'	Indicates selection by priority not supported.
,SAPI_VOL_SELECT='NO'	Indicates selection by volume not supported.
,SAPI='YES'	Indicates SAPI is supported by this JES.
,SPOOL_BROWSE='YES'	Indicates that spool browse is supported on this release of JES3. (JES3 only. On JES2 all releases support spool browse.) The text SPOOL_BROWSE='NO' is never supplied. On the JES3 releases that do not support spool browse, the entire SPOOL_BROWSE keyword is omitted.
,SYN='list of system synonyms'	The list of system scoped command prefix synonyms from the CONSTD SYN= definition. (JES3 only.)
,TSO_SYSOUT_CLASS='*classes*'	Indicates the SYSOUT class for which output is placed on the HOLD queue, and is held for TSO/E. (See note.) For JES2, classes are held for SYSOUT.
,WTR_SYSOUT_CLASS='*classes*'	Indicates the SYSOUT class for which output is placed on the JES3 writer queue. (See note.) For JES2, classes are for non-held SYSOUT.
Note: *class* can be a value of A through Z or 0 through 9. No blanks or commas are returned. For JES3, classes that are defined to have SYSOUT directed to NJE are not returned. For JES3, classes that are defined to have zero copies created are not returned. For JES3, classes that are defined to be held for **both** TSO as well as external writers are not returned.	

The format of the data in the variable output sections is:

```
,keyword='value',keyword='value',...,keyword='value'
```

Note that each keyword value in the data string is enclosed by a pair of apostrophes and preceded by a comma. All values must be uppercase.

Restrictions for Variable Output Section: Double-byte character set information is not currently recognized for variable output section strings.

Specifying Keywords

Installations, or any subsystem that supports the Request Subsystem Version Information call, must observe the following syntax rules when specifying keywords in the SSVIDAT field:

- A comma starts the entire string, and a comma must delimit each keyword from the previous keyword. This syntax allows the caller's function routine to use an index-type function when searching for keywords. For example, an index for ",keyword='" provides a valid technique for searching for the presence of the keyword in a string.

The length of the data string can exceed 256 characters; ensure that the caller's parsing function is coded to handle very long data strings.

An apostrophe ('), comma (,), and equal sign (=) are not allowed as part of a keyword term. For example, the following keyword terms are not allowed:

  - KEYWORD'S='...'
  - KEY=WORD='...'
  - KEYWORD,='...'

- The prefix value USER_ is reserved for installations to pass their own information in the installation variable output section.
- The '=' sign is required.
- Not all keywords need be returned by the subsystem service.
- The combination of an equal sign followed by an apostrophe (=').. is not allowed as part of a keyword value.
- Alphabetic characters for a keyword value are assumed to be in upper case unless otherwise stated.
- If a registered keyword appears in an installation string, then the allowable values are the same as the system string definition.
- The apostrophes surrounding the value for a keyword are required.
- A null value is indicated by two apostrophes in sequence.
- To code an apostrophe within the keyword value, code two apostrophes and enclose the keyword value within apostrophes.

Additional Recommendations for Specifying Keywords:

- Define yes or no choices as 'YES' or 'NO' (not abbreviated).
- Specify any numeric values as unsigned decimal numbers.
- Avoid specifying multiple parameters per keyword. Instead, use a separate keyword for each parameter, when possible.
- Numeric values must be passed in zoned-decimal format.
- When a keyword is located in a string, the end of the keyword's value should be determined prior to performing any comparisons. This ensures that the value that is searched for is not just a substring for another value.
- A feature or function that may be activated or inactivated while a subsystem is still active may not be good candidates to include in the string. An exception to this would be if the subsystem has a mechanism to inform all potential requesters interested in the feature or function.

Example

The following is a coded example of a program that generates a Request Subsystem Version Information call.

This program is reentrant, and does not have to run in an authorized library.

```
SSIREQ54 TITLE '- ISSUE SUBSYSTEM INFORMATION SSI CALL'
SSIREQ54 AMODE 31
SSIREQ54 RMODE ANY
         SPLEVEL SET=4
*********************************************************************
* FUNCTION: THIS PROGRAM GENERATES A SUBSYSTEM VERSION INFORMATION  *
*           CALL.  IT DISPLAYS THE RETURNED INFORMATION ON THE      *
*           ON THE OPERATOR CONSOLE.  THE SUBSYSTEM CALL IS         *
*          DIRECTED TO THE MASTER SUBSYSTEM.                       *
*                                                                  *
* NAME OF MODULE: SSIREQ54                                         *
*                                                                  *
* REGISTER USE:                                                    *
*                                                                  *
*             0                   PARM REGISTER                    *
*             1                   PARM REGISTER                    *
*             2                   SSOB                             *
*             3                   SSIB                             *
*             4                   SSVI                             *
*             5                   SSVI SIZE USED                   *
*             6                   SSVI SIZE NEEDED                 *
*             7                   UNUSED                           *
*             8                   ABEND VALUE REGISTER             *
*             9                   IEFSSREQ/SSVI RETURN CODES       *
*             10                  UNUSED                           *
*             11                  UNUSED                           *
*             12                  SSIREQ54 BASE REGISTER           *
*             13                  SAVE AREA CHAIN REGISTER         *
*             14                  PARM REGISTER / RETURN ADDR      *
*             15                  PARM REGISTER / COND CODE        *
*                                                                  *
* ATTRIBUTES:  PROBLEM STATE, AMODE(31), RMODE(ANY)                *
*                                                                  *
* NOTE:  THIS IS A SAMPLE PROGRAM.                                 *
*                                                                  *
********************************************************************
         SPACE ,
SSIREQ54 START 0
         TITLE '- EQUATES'
********************************************************************
*        GENERAL EQUATES                                           *
********************************************************************
NOP      EQU   0                  NO OPERATION
FF       EQU   X'FF'              ALL BITS ON
EQUHOBON EQU   X'80000000'        HIGH ORDER BIT ON
*
********************************************************************
*        AFTER COMPARE INSTRUCTIONS                                *
********************************************************************
GT       EQU   2                  A HIGH
LT       EQU   4                  A LOW
NE       EQU   7                  A NOT EQUAL B
EQ       EQU   8                  A EQUAL B
GE       EQU   11                 A NOT LOW
LE       EQU   13                 A NOT HIGH
*
********************************************************************
*        AFTER ARITHMETIC INSTRUCTIONS                             *
********************************************************************
OV       EQU   1                  OVERFLOW
PLUS     EQU   2                  PLUS
MINUS    EQU   4                  MINUS
NZERO    EQU   7                  NOT ZERO
ZERO     EQU   8                  ZERO
ZEROS    EQU   8                  ZERO
NMINUS   EQU   11                 NOT MINUS
NOV      EQU   12                 NOT OVERFLOW
NPLUS    EQU   13                 NOT PLUS
*
********************************************************************
*        AFTER TEST UNDER MASK INSTRUCTIONS                        *
********************************************************************
ALLON    EQU   1                  ALL ON
MIXED    EQU   4                  MIXED
NALLOFF  EQU   5                  ALLON+MIXED
```

```
ALLOFF   EQU   8                   ALL OFF
NALLON   EQU   12                  ALLOFF+MIXED
*
***********************************************************************
*        GENERAL PURPOSE REGISTERS                                    *
***********************************************************************
R0       EQU   0                   PARM REGISTER
R1       EQU   1                   PARM REGISTER
R2       EQU   2                   SSOB
R3       EQU   3                   SSIB
R4       EQU   4                   SSVI
R5       EQU   5                   SSVI SIZE USED
R6       EQU   6                   SSVI SIZE NEEDED
R7       EQU   7                   UNUSED
R8       EQU   8                   ABEND VALUE REGISTER
R9       EQU   9                   IEFSSREQ/SSVI RETURN CODES
R10      EQU   10                  UNUSED
R11      EQU   11                  UNUSED
R12      EQU   12                  SSIREQ54 BASE REGISTER
R13      EQU   13                  SAVE AREA CHAIN REGISTER
R14      EQU   14                  PARM REGISTER / RETURN ADDR
R15      EQU   15                  PARM REGISTER / COND CODE
*
***********************************************************************
*        ABEND EQUATES                                                *
***********************************************************************
SSVIA101 EQU   101                 IEFSSREQ MACRO RETURNED R15
*                                   NON-ZERO
SSVIA102 EQU   102                 SSOBRETN IS NON-ZERO BUT NOT
*                                   EQUAL TO SSVIERR
         TITLE '- CVT - COMMUNICATIONS VECTOR TABLE'
         CVT DSECT=YES,LIST=NO
         TITLE '- IEFJESCT - JES CONTROL TABLE'
         IEFJESCT TYPE=DSECT
         TITLE '- IEFJSSIB - SUBSYSTEM IDENTIFICATION BLOCK'
         IEFJSSIB
         TITLE '- IEFSSOBH - SUBSYSTEM OPTION BLOCK HEADER'
         IEFSSOBH
SSOBGN   EQU   *             REQUIRED IF NOT USING IEFJSSOB DEFN
         TITLE '- IEFSSVI  - SUBSYSTEM VERSION INFORMATION'
         IEFSSVI
         TITLE '- LDA - LOCAL DATA AREA DSECT'
***********************************************************************
*        THE LOCAL DATA AREA IS MAPPED IN THIS DSECT.  THIS DATA      *
*        AREA IS OBTAINED THROUGH A 'STORAGE' MACRO INSTRUCTION       *
*        IN THE PROGRAM.                                              *
***********************************************************************
         SPACE ,
LDAAREA  DSECT
LDASTART EQU   *                   START OF LOCAL DATA AREA
LDASA    DS    9D                  SAVE AREA FOR LOWER CALLERS
LDAID    DS    CL8'LDAAREA '       IDENTIFICATION OF LDA AREA
LDA@SSOB DS    F                   POINTER TO SSOB FOR IEFSSREQ'S USE
LDASSOB  DC    XL(SSOBHSIZ)'00'    AREA FOR SSOB
LDASSIB  DC    XL(SSIBSIZE)'00'       AND SSIB
LDAEND   EQU   *                   START OF LOCAL DATA AREA
LDASIZE  EQU   LDAEND-LDASTART     LENGTH OF AREA TO GETMAIN
         TITLE '- HOUSEKEEPING REENTRANT ENTRY ROUTINE'
***********************************************************************
*        HOUSEKEEPING AND GENERAL ENTRY ROUTINE (REENTRANT USING      *
*        LINKAGE-STACK METHOD)                                        *
***********************************************************************
SSIREQ54 CSECT
         BAKR  R14,0               SAVE CALLER'S ARS, GPRS, AND
*                                   RETURN ADDRESS ON LINKAGE STACK
         LR    R12,R15             SET UP PROGRAM BASE REGISTER
         USING SSIREQ54,R12        INFORM ASSEMBLER
         STORAGE OBTAIN,           GET A SAVE AREA THAT'S REENTRANT    X
               LENGTH=LDASIZE,     STANDARD SAVE AREA SIZE             X
               COND=NO             UNCONDITIONAL REQ - NO RC INFO
         SPACE ,
         LR    R13,R1              SAVE STORAGE ADDRESS
         USING LDASTART,R13        ADDRESS LOCAL DATA AREA (LDA)
         MVC   LDAID,=CL8'LDAAREA'   INDICATION OF LOCAL DATA AREA
         WTO   'SSIREQ54 EXECUTING V1', LET OP KNOW                    X
               ROUTCDE=(2,11)
         TITLE '- SSOB/SSVI PROCESSING ROUTINE'
*********************************************************************
*        SET UP SSOB, SSIB, AND SSVI CONTROL BLOCKS.                *
*********************************************************************
         SPACE 2
*********************************************************************
*        OBTAIN STORAGE FOR AN SSVI.                                *
*********************************************************************
         LA    R5,SSVIMSIZ         MINIMUM SIZE REQUIRED
TRYIT    DS    0H
         STORAGE OBTAIN,           GET A SAVE AREA THAT'S REENTRANT    X
               LENGTH=(5),         STANDARD SAVE AREA SIZE             X
               COND=NO             UNCONDITIONAL REQ - NO RC INFO
         LR    R4,R1               POINT TO THE SSVI
         USING SSVI,R4             ADDRESSABILITY
         SPACE 2

*********************************************************************
*        WHEN ISSUING THE IEFSSREQ MACRO, REGISTER 1 MUST POINT TO  *
*        A CONTROL BLOCK THAT HAS IT'S HIGH-ORDER BIT SET, AND IT'S *
*        LOW-ORDER 31 BITS POINTING TO THE SSOB FOR THE SPECIFIC    *
*        FUNCTION CALL.  THEREFORE, SET THIS CONTROL BLOCK          *
*        (LDA@SSOB) WITH THE HIGH ORDER BIT SET, AND THE LOW-ORDER  *
*        31 BITS POINTING TO LDASSOB FIELD.                         *
*********************************************************************
         SPACE ,
         LA    R2,LDASSOB          POINT TO THE SSOB
         USING SSOB,R2             ADDRESSABILITY
         O     R2,=A(EQUHOBON)     SET HIGH ORDER BIT ON
         ST    R2,LDA@SSOB         STORE FOR IEFSSREQ'S USE
*                                   LATER WHEN ISSUING MACRO
*********************************************************************
*        NOW PROCESS THE SSOB (THE SUBSYSTEM OPTION BLOCK).         *
*********************************************************************
         SPACE ,
         XC    SSOBEGIN(SSOBHSIZ),SSOBEGIN  CLEAR THE SSOB
         MVC   SSOBID,=C'SSOBID'   MOVE IDENTIFIER IN
         MVC   SSOBLEN,=Y(SSOBHSIZ)  MOVE SIZE OF THE HEADER IN
         LA    R1,LDASSIB          POINT TO THE SSIB
         ST    R1,SSOBSSIB         SAVE IN SSOB
         MVC   SSOBFUNC,=Y(SSOBSSVI) MOVE THE FUNCTION ID IN
         ST    R4,SSOBINDV         SAVE SSVI ADDRESS IN SSOB
*********************************************************************
*        DONE WITH THE SSOB - NOW WORK WITH THE SSIB.               *
*        THE SSIB IS USED TO IDENTIFY THE SPECIFIC SUBSYSTEM THAT   *
*        THIS REQUEST IS GOING TO.  WE ISSUE OUR REQUEST TO THE     *
*        MASTER SUBSYSTEM, SO WE NEED TO PROVIDE ONE RATHER THAN    *
*        USE THE LIFE-OF-JOB SSIB WHICH COULD BE USED IF RUNNING    *
*        UNDER JES2.                                                *
*********************************************************************
         SPACE ,
         LA    R3,LDASSIB          POINT TO THE SSIB
         USING SSIB,R3             ADDRESSABILITY
         XC    SSIBEGIN(SSIBSIZE),SSIBEGIN  CLEAR SSIB
         MVC   SSIBID,=C'SSIBID'   MOVE IDENTIFIER IN
         MVC   SSIBLEN,=Y(SSIBSIZE)  MOVE SIZE OF THE SSIB IN
         MVC   SSIBSSNM,=C'MSTR'   SHOW MASTER SUBSYSTEM TO BE
*                                   USED TO GET THE INFO
*********************************************************************
```

```
*        DONE WITH THE SSIB - NOW WORK WITH THE SSVI.                *
*        THE SIZE CAN BE VARIABLE, SO WE NEED TO USE DYNAMIC SIZING *
*        TECHNIQUES WHEN CLEARING IT.                                *
*********************************************************************
         SPACE ,
         LR    R15,R5              SIZE OF THE SSVI
         BCTR  R15,0               DECREMENT FOR EX
         EX    R15,CLEAR           CLEAR THE SSVI
         STH   R5,SSVILEN          SAVE THE SIZE OF THE SSVI
         MVI   SSVIVER,SSVICVER    MOVE CURRENT VERSION NUMBER IN
         MVC   SSVIID,=A(SSVICID)  SAVE THE IDENTIFIER
         TITLE '- ISSUE IEFSSREQ'  ON IT''S WAY'

*********************************************************************
*        THE SSOB, SSIB, AND SSVI BLOCKS ARE NOW FILLED IN, AND THE *
*        IEFSSREQ MACRO IS READY TO GO.                              *
*********************************************************************
         SPACE 2
*********************************************************************
*        SET REGISTER ONE SO THAT IT POINTS TO POINTER OF THE SSOB  *
*********************************************************************
         SPACE ,
         LA    R1,LDA@SSOB         R1 POINTS TO ADDRESS OF SSOB
*********************************************************************
*        ISSUE THE IEFSSREQ REQUEST TO THE SUBSYSTEM.  NOTE WE      *
*        DON'T HAVE TO MODESET TO SUPERVISOR STATE; PROBLEM STATE   *
*        IS FINE FOR THIS SUBSYSTEM VERSION INFORMATION CALL.       *
*********************************************************************
         SPACE ,
         IEFSSREQ ,                GO GET THE VERSION INFORMATION
         SPACE ,
*********************************************************************
*        NOW CHECK THE RESULTS - HOW DID WE DO?                      *
*********************************************************************
         SPACE ,
         LA    R8,SSVIA101         ASSUME R15 NON-ZERO
         LTR   R9,R15              DID R15=0?  SAVE IN REG9 AS WELL
         BC    NZERO,ABEND         NO...GO TAKE A DUMP
         LA    R8,SSVIA102         ASSUME SSOBRETN NON-ZERO
         ICM   R9,B'1111',SSOBRETN CHECK SSOBRETN
         BC    ZERO,SHOWUSER       SEEMS OK - SHOW WHAT WE GOT
         C     R9,=A(SSVINSTR)     SPECIAL NOT ENOUGH
*                                   STORAGE CASE?
         BC    NE,ABEND            NO, TAKE A DUMP
         SPACE ,
*********************************************************************
*        THE IEFSSREQ MACRO WORKED OK, BUT THERE WASN'T ENOUGH      *
*        STORAGE DEFINED TO RECEIVE ALL OF THE INFORMATION.  USING  *
*        THE INFORMATION RETURNED, LET'S TRY AGAIN.                  *
*********************************************************************
         SPACE ,
         LH    R6,SSVIRLEN         SAVE THE STORAGE NEEDED
         STORAGE RELEASE,          FREE MY INFO AREA                   X
               LENGTH=(5),         VARIABLY OBTAINED SIZE              X
               ADDR=(4)            HERE'S WHERE IT LIVES
         LR    R5,R6               NEW SIZE TO TRY AGAIN
         B     TRYIT               GO DO IT TO DO!
         DROP  R2                  SSOB
         TITLE '- EXIT ROUTINES TO MVS (BOTH GOOD AND BAD)'
*********************************************************************
*        THESE ARE GENERAL EXIT ROUTINES BACK TO MVS.               *
*        ABENDS ARE USED FOR THE ABNORMAL TERMINATIONS.             *
*********************************************************************

         SPACE 2
SHOWUSER DS    0H
         ICM   R6,B'1111',SSVIUDOF ANY USER DATA?
         BC    ZERO,SHOWSYS        NO, SHOW THE SYSTEM DATA
         LA    R7,SSVI(R6)         R7==>USER VARIABLE DATA AREA
         USING SSVIVDAT,R7         ADDRESSABILITY
         LH    R8,SSVIVLEN         GET THE LENGTH
         CH    R8,=H'125'          GREATER THAN 125 CHARS?
         BC    LE,SHOWIT1          NO, USE THE REAL LENGTH
         MVC   SSVIVLEN,=H'125'    ELSE, USE ONLY FIRST 125
SHOWIT1  DS    0H                  R8=NUMBER OF CHARS TO DISPLAY
         WTO   TEXT=SSVIVLEN,      SHOW TO THE CONSOLE                 X
               ROUTCDE=(11)
         B     SHOWSYS2            BRANCH AROUND WTO
SHOWSYS  DS    0H
         WTO   'SSIREQ54 NO USER DATA PRESENT',   LET OP KNOW          X
               ROUTCDE=(2,11)
SHOWSYS2 DS    0H
         ICM   R6,B'1111',SSVISDOF ANY SYSTEM DATA?
         BC    NZERO,SHOWSYS3      YES, DISPLAY IT
         WTO   'SSIREQ54 NO SYSTEM DATA', LET OP KNOW                  X
               ROUTCDE=(2,11)
         B     RETURN
SHOWSYS3 DS    0H
         LA    R7,SSVI(R6)         R7==>USER VARIABLE DATA AREA
         USING SSVIVDAT,R7         ADDRESSABILITY
         LH    R8,SSVIVLEN         GET THE LENGTH
         CH    R8,=H'125'          GREATER THAN 125 CHARS?
         BC    LE,SHOWIT2          NO, USE THE REAL LENGTH
         MVC   SSVIVLEN,=H'125'    ELSE, USE ONLY FIRST 125
SHOWIT2  DS    0H                  R8=NUMBER OF CHARS TO DISPLAY
         WTO   TEXT=SSVIVLEN,      SHOW TO THE CONSOLE                 X
               ROUTCDE=(11)
         SPACE ,
         WTO   'SSIREQ54 RETURNING',      LET OP KNOW                  X
               ROUTCDE=(2,11)
         SPACE ,
*********************************************************************
*        GIVE BACK THE STORAGE WE BOUGHT EARLIER.                   *
*********************************************************************
         SPACE ,
RETURN   DS    0H
         STORAGE RELEASE,          FREE MY INFO AREA                   X
               LENGTH=(5),         VARIABLY OBTAINED SIZE              X
               ADDR=(4)            HERE'S WHERE IT LIVES
         STORAGE RELEASE,          FREE MY REENTRANT SAVE AREA         X
               LENGTH=LDASIZE,     STANDARD SAVE AREA SIZE             X
               ADDR=(R13)          HERE'S WHERE IT LIVES
         SPACE ,
*********************************************************************
*        SET PROGRAM RETURN CODE.                                   *
*********************************************************************

         SPACE ,
         SLR   R15,R15             SET RETURN CODE OF ZERO
*********************************************************************
*        RETURN TO CALLER WITH ORIGINAL STATUS AND REGISTERS.       *
*********************************************************************
         SPACE ,
         PR                        RETURN TO CALLER USING STACK,       X
                                    RESET REGS 2-14, ADDRESSING MODE,  X
                                    ASC MODE, AND RETURN TO CALLER
*********************************************************************
*        ABEND ROUTINES FOLLOW                                      *
*********************************************************************
         SPACE ,
ABEND    DS    0H                  R15 NON-ZERO AFTER IEFSSREQ
         WTO   'PROGRAM HAD FATAL ERROR - SEE REGS 8 AND 9'            X
               ROUTCDE=(2,11)
         SPACE ,
         ABEND (R8),DUMP,STEP      LET THE USER IN ON THE BAD NEWS
         TITLE '- LOCAL DATA'
         SPACE ,
CLEAR    XC    0(*-*,R4),0(R4)     CLEAR SSVI - OBJ OF EXECUTE
         END   ,
```

Scheduler Facilities Call - SSI Function Code 70

The scheduler facilities function (SSI function code 70) provides a requesting program the ability to modify or obtain those characteristics of sysout datasets that are controlled by subsystem maintained scheduler data (for example, SWBTU data).

Type of Request

Directed SSI call.

Use Information

Currently, SSI 70 supports the following function types:

- SWB Modify
- SWB Merge
- SWB Merge Cleanup

These functions allow a user to modify or obtain SWBTU data associated with a SYSOUT dataset. SWBTU data consists of dynamic output values such as ADDRESS, CLASS, COPIES, FORMS, NOTIFY, etc. The output values (‘keys’) that can be modified by SSI 70 are listed in the IEFDOKEY macro. See the z/OS MVS Data Areas book for a description of the IEFDOKEY data area.

Issued to

A JES2 or JES3 subsystem (either primary or secondary). The subsystem does not have to be associated with the requesting address space.

Related SSI Codes

Extended Status Function Call — SSI Function Code 80

Related Concepts

None.

Environment

The caller (issuer of the IEFSSREQ macro) must include the following mapping macros:

- CVT
- IEFJESCT

Data areas commonly referenced are mapped by the following mapping macros. IBM recommends you include them in your program:

- IEFSSOBH
- IEFJSSIB
- IAZSSSF

The caller must meet the following requirements:

Caller variable	**Caller value**
Minimum Authorization	Problem state, any PSW key
Dispatchable unit mode	Task
AMODE	24-bit or 31-bit

Caller variable	Caller value
Cross memory mode	PASN=HASN=SASN
ASC mode	Primary
Interrupt status	Enabled for I/O and external interrupts
Locks	No locks held
Control Parameters	The SSOB, SSIB, and SSSF control blocks can reside in storage above or below 16 megabytes.
Recovery	The caller should provide an ESTAE-type recovery environment. See *z/OS MVS Programming: Assembler Services Guide* for more information on an ESTAE-type recovery environment.

Figure 10 shows the environment at the time of the call for SSI function code 70.

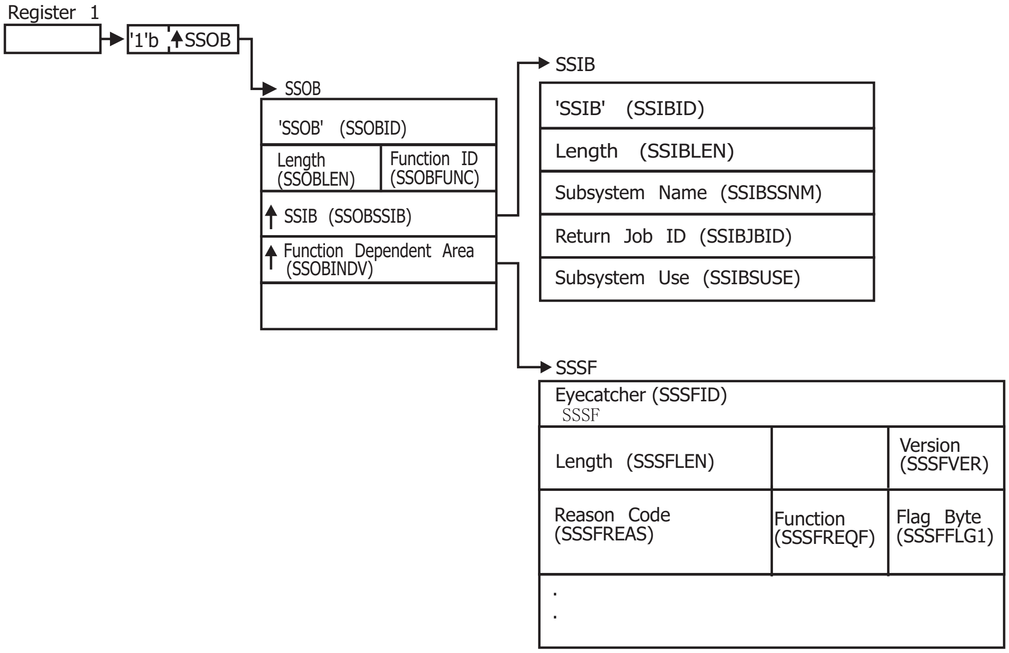
Register 1
'1'b
SSOB
SSOB
'SSOB' (SSOBID)
Length (SSOBLEN)
Function ID (SSOBFUNC)
SSIB (SSOBSSIB)
Function Dependent Area (SSOBINDV)
SSIB
'SSIB' (SSIBID)
Length (SSIBLEN)
Subsystem Name (SSIBSSNM)
Return Job ID (SSIBJBID)
Subsystem Use (SSIBSUSE)
SSSF
Eyecatcher (SSSFID)
SSSF
Length (SSSFLEN)
Version (SSSFVER)
Reason Code (SSSFREAS)
Function (SSSFREQF)
Flag Byte (SSSFFLG1)
.
.

Figure 10. Environment at Time of Call for SSI Function Code 70

Input Register Information

Before issuing the IEFSSREQ macro, the caller must ensure that the following general purpose registers contain:

Register	Contents
1	Address of a 1-word parameter list that has the high-order bit on and a pointer to the SSOB control block in the low-order 31 bits.
13	Address of a standard 18-word save area

Input Parameters

Input parameters for the function routine are:

- SSOB
- SSIB
- SSSF

SSOB Contents: The caller sets the following fields in the SSOB control block on input:

Field Name	Description
SSOBID	Identifier 'SSOB'
SSOBLEN	Length of the SSOB (SSOBHSIZ) control block
SSOBFUNC	SSI function code 70 (SSOBSFS)
SSOBSSIB	Address of an SSIB control block or zero (if this field is zero, the life-of-job SSIB is used). See "Subsystem Identification Block (SSIB)" on page 8 for more information on the life-of-job SSIB.
SSOBINDV	Address of the function dependent area (SSSF control block)

Set all other fields in the SSOB control block to binary zeros before issuing the IEFSSREQ macro.

SSIB Contents: If you don't use the life-of-job SSIB, the caller must provide an SSIB and set the following fields in the SSIB control block on input:

Field Name	Description
SSIBID	Identifier 'SSIB'
SSIBLEN	Length of the SSIB (SSIBSIZE) control block
SSIBSSNM	Subsystem name — name of the subsystem to which this Scheduler Facilities call is directed. It is usually the primary JES, or in the case of JES2, a possible secondary JES. If your routine has not been initiated from such a JES, the caller must issue a Request Job ID call (SSI function code 20) prior to this scheduler facilities call. You must use the same subsystem name in this SSIBSSNM field as you used for the Request Job ID call.

The caller must set all other fields in the SSIB control block to binary zeros before issuing the IEFSSREQ macro.

SSSF Contents: The caller must set the following fields in the IAZSSSF control block on input to a Scheduler Facilities call:

Field Name	Description
SSSFID	Control block eyecatcher, set to 'SSSF'.
SSSFLEN	Length of the SSSF control block. The length is the sum of the header length size, SSSFHSZE, and the size of the request dependent area. For the

SWB modify function, the size of the request dependent area is SSSFMRSZ. For the SWB merge and SWB cleanup functions, the size of the request dependent area is SSSFFMSZ.

SSFVER
Version of mapping for the caller – Set this field to SSSFCVER (an IBM-defined integer constant within the SSSF control block).

SSSFREQF
Function request value – designates the function type requested. Possible values are:

SSSFSWBM
SWB modify of output descriptors

SSSFSWBF
SWB merge of output descriptors

SSSFSWBC
Return storage used for SWB merge function. Use this function when all SWB merge calls are finished. The format of the SSOB extension is identical to that used for the SSSFSWBF function.

Set all other fields in the SSSF control block to binary zeros before issuing the IEFSSREQ macro.

The following section describes the sub-function dependent area for the SWB modify subfunction. The caller must set the following fields in the IAZSSSF control block on input to the SWB modify subfunction.

For the SWB modify function, the caller can optionally set the following fields in the IAZSSSF control block on input to the scheduler facilities call.

SSSFFLG1
Flag Byte - request dependent indicator.

For the SWB modify function, this flag indicates the type of security authorization checking requested for this request. Note that only one of the following two flags should be turned on.

SSSFDEST
Perform a destination check. This check ensures that the user has SAF authority to the ISFAUTH resource (JES2 only).

SSSFSECL
Perform a SECLABEL dominance check to ensure that the SECLABEL of the user dominates the SECLABEL of the SYSOUT. This request is honored for authorized callers, and the authorization check will be performed only if the appropriate security environment exists (JES2 only).

If neither of the above values has been specified in SSSFFLG1 for the SWB modify function, the default security authorization check ensures that the user has SAF authority to the JESSPOOL resource.

SSSFMTYP
Indicates the type of modify data is being passed. OFF means that individual job identification data is being passed (JES2 only). ON indicates that a client token is being passed.

The following fields should be filled in when bit SSSFMTYP in SSSFFLG1 is OFF.

SSSFJBNM
The 1-8 character jobname associated with the sysout that is to be modified.

SSSFJBID
The 1-8 character jobid associated with the sysout that is to be modified.

SSSFGRPN
The 1-8 character output group name associated with the sysout that is to be modified.

SSSFGRP1
Output group id 1 associated with the sysout that is to be modified.

SSSFGRP2
Output group id 2 associated with the sysout that is to be modified.

The following field should be filled in when bit SSSFMTYP in SSSFFLG1 is ON.

SSSFMDST

Address of client token. The token is either a data set level token for JES3 or a group level token for JES2.

A data set level token is returned in field STVSCTKN when a verbose output request is made using SSI 80 (Extended Status). In addition, the address of a data set token is returned in field SSS2DSTR for each data set returned by SSI 79 (SAPI). (JES3 only)

A client token is returned by the DYNALLOC macro. The text unit DALRTCTK (key 0071) will return an 80 byte JES Client Token as the data of the text unit.

JES3 requires the use of SSSFMDST.

The following fields are common to all types of modify requests.

SSSFCART
The 1-8 character command and response token (CART) to be used for WTO responses. (JES2 only)

SSSFCNID
The console identifier to be used for WTO responses. (JES2 only)

SSSFMDAD
Address of output descriptor modify list in SWBTU format. This list is mapped as follows:

- SJPRFX area, mapped by macro IEFSJPFX. Note that field SJPRVERB should be set to 'OUTPUT' to indicate that this is an OUTPUT descriptor.
- Area for text units. See macro IEFDOTUM for a mapping of each text unit.

For the SWB modify function, the caller must set at least one of the following two pairs of fields in the IAZSSSF control block to be non-zero on input to the scheduler facilities call. The pairs are:

- Pair 1: SSSFMDAD and SSSFMDLN
- Pair 2: SSSFERAD and SSSFERLN

Within a pair, both fields must be non-zero (for example, if the user just wants the 'erase' function in pair 2, then SSSFERAD and SSSFERLN must be non-zero). The user can choose to fill in pair 1, pair 2, or both pairs.

SSSFMDLN
Length of modify list – includes length of prefix area.

SSSFERAD
Address of output descriptor Erase list in TU format. The erase list is a list of fullword fields, each of which consists of a two byte key value, (defined in macro IEFDOKEY), and two bytes of zeroes.

For the SWB modify function, the caller must set at least one of the following two pairs of fields in the IAZSSSF control block to be non-zero on input to the scheduler facilities call. The pairs are:

- Pair 1: SSSFMDAD and SSSFMDLN
- Pair 2: SSSFERAD and SSSFERLN

Within a pair, both fields must be non-zero (for example, if the user just wants the 'erase' function in pair 2, then SSSFERAD and SSSFERLN must be non-zero). The user can choose to fill in pair 1, pair 2, or both pairs.

SSSFERLN
Length of erase list.

For the SWB modify function, the caller can optionally set the following fields in the IAZSSSF control block on input to the scheduler facilities call.

SSSFFLG1
Flag Byte – request dependent indicator.

For the SWB modify function, this flag indicates the type of security authorization checking requested for this request. Note that only one flag should be turned on.

SSSFDEST
Perform a destination check. This check ensures that the user has SAF authority to the ISFAUTH resource (SDSF class).

SSSFSECL
Perform a SECLABEL dominance check to ensure that the SECLABEL of the user dominates the SECLABEL of the SYSOUT. This request is honored for authorized callers, and the authorization check will be performed only if the appropriate security environment exists.

If no value has been specified in SSSFFLG1 for the SWB modify function, the default security authorization check will ensure that the user has SAF authority to the JESSPOOL resource.

SSSFCART
The 1-8 character command and response token (CART) to be used for WTO responses.

SSSFCNID
The console identifier to be used for WTO responses.

The following section describes the sub-function dependent area for the SWB merge subfunction. The caller must set the following fields in the IAZSSSF control block on input to the SWB merge subfunction.

SSSFFDTK
Address of the data set token representing the data set. The dataset token can be obtained, for example, from SSI function code 80 (STVSCTKN) or SSI function code 79 (SSS2DSTR).

For the SWB merge function, the caller can optionally set the following fields in the IAZSSSF control block on input to the scheduler facilities call.

SSSFFGTK
Address of a group token representing the data set. This is an optional value. If given, it must be the address of the group token. The group token is in field STSTCTKN returned by SSI Function Code 80. (JES2 only)

SSSFFLG1
Flag Byte - request dependent indicator.

SSSFFSWB
Provide non-SWA SWBs in addition to SWBTUs.

SSSFCPAT
Return compatibility SWBs.

Output Register Information

When control returns to the caller, the general purpose registers contain:

Register	**Contents**
0	Used as a work register by the system
1	Address of the SSOB control block
2 — 13	Same as on entry to call
14	Return address
15	Return code

Return Code Information

The SSI places one of the following decimal return codes in register 15. Examine the return code to determine if the request was processed.

Return Code (Decimal)	**Meaning**
SSRTOK (0)	The scheduler facilities call was processed. Check the SSOBRETN field for specific function information.
SSRTNSUP (4)	The subsystem specified in the SSIBSSNM field does not support this function
SSRTNTUP (8)	The subsystem specified in the SSIBSSNM field exists, but is not active.
SSRTNOSS (12)	The subsystem specified in the SSIBSSNM field is not defined to MVS.
SSRTDIST (16)	The pointer to the SSOB control block or the SSIB control block is not valid, or the function code specified in the SSOBFUNC field is greater than the maximum number of functions supported by the subsystem specified in the SSIBSSNM field.
SSRTLERR (20)	Either the SSIB control block or the SSOB control block has incorrect lengths or formats.

SSRTNSSI(24)
The SSI has not been initialized.

Output Parameters

Output parameters for the function routine are:

- SSOBRETN
- SSSFREAS
- SSSFMREA
- SSSFMREA

All three SSI 70 functions have a common set of R15 and SSOBRETN values. However, each function has its own set of output parameters.

SSOBRETN Contents: When control returns to the caller and register 15 contains a zero, the SSOBRETN field contains one of the following decimal values:

Value (Decimal)
Meaning

SSSFOK (0)
Request processed successfully.

SSSFUERR (8)
Request rejected, see reason code in field SSSFREAS.

SSSFEXTE (12)
No extension found.

SSSFNOST (16)
No storage to process request.

SSSFREAS Contents: When control returns to the caller and field SSOBRETN = SSSFUERR (8), the SSSFREAS field contains one of the following decimal values:

Value (Decimal)
Meaning

SSSFNOJ2 (16)
JES2 not up and running.

SSSFINVF (20)
Invalid function request.

SSSFINVE (24)
Invalid SSSF extension.

SSSFNOAU (32)
No authorization for request.

SSSFINRI (36)
Error processing request. See reason code in field SSSFMREA for SWB modify function or SSSFFREA for SWB merge/SWB merge cleanup functions.

SSSFEXC (40)
Exit cancelled request.

SSSFDISA (44)
Scheduler Services disabled.

SSSFGLBL(48)
Insufficient Global Level

SSSFMREA Contents: For the SWB modify function, when control returns to the caller and field SSSFREAS = SSSFINRI (36), the SSSFMREA field contains one of the following decimal values:

Value (Decimal)	**Meaning**
SSSFMOK (0)	Modify processing successful.
SSSFMTUE (4)	Modify/Erase TU error.
SSSFMJBE (8)	Modify jobname/jobid error.
SSSFMGRP (12)	Modify groupname error.
SSSFMNOS (16)	No storage to process request.
SSSFMSCI (20)	Invalid security request (SSSFFLG1).
SSSFMIVX (24)	Invalid modify extension.
SSSFMTKE (28)	Modify data set token error.
SSSFMNTK (32)	No data set token provided.
SSSFMJNF (36)	Job not found.
SSSFMDNF (40)	Data set not found.
SSSFMDSB (44)	Data set busy.
SSSFMDSQ (48)	Data set on BDT or TCP queue.
SSSFMDSF (52)	Data set referenced by JECL FORMAT statement.
SSSFMSJF (56)	SJFREQ (MERGE) error.
SSSFMSPC (60)	SWBTUREQ (SPLICE) error.
SSSFMSPT (64)	SWBTUREQ (SPLIT) error.
SSSFMSTU (68)	SWBTUREQ (RETRIEVE) error.
SSSFMSPL (72)	Spool I/O error.
SSSFMTNU (76)	Token not usable for requested function.

SSSFFREA Contents: When control returns to the caller of SWB merge/SWB merge cleanup function and the field SSSFREAS = SSSFINRI (36), the SSSFFREA field contains one of the following decimal values:

SSSFFOK (0)
Check the SSSFWRTN and SSSFWRSN fields for information.

SSSFFDST (4)
Data set token not given

SSSFFDSG (8)
Data set gone

SSSFFDSV (12)
Failure obtaining checkpoint version (JES2 only)

SSSFFJBG (16)
Job gone

SSSFFSWI (20)
Invalid SWBTU buffer

SSSFFDSE (24)
Invalid data set token

SSSFFGTE (28)
Invalid group token

SSSFFNOS (32)
No storage to process request

SSSFFSPL (36)
Spool I/O error

SSSFFTNU (40)
Token not usable for requested function

SSSFFDSQ (48)
Data set on BDT/TCP queue

SSSFFDSF (52)
Data set referenced by JECL FORMAT statement

When control returns to the caller of the SWB merge function:

SSSFFSWT
Token to be used by the calling program for SJFREQ services.

SSSFFSWU
Address of the SWBTU buffer.

SSSFFREA
Error reason code for Merge. Reported values are defined above.

SSSFWRTN
Return code from SWB services.

- **SSSFWOK (0)**
  Success

- **SSSFWERR (4)**
  Failed, see SSSFWRSN for the exact reason

SSSFWRSN
Reason code for SWB services failure SSSSCCRR where SSSSCCRR is defined as:

SSSS
Reason code from SJF service RR or a qualifier for a JES service error.

CC Return code from SJF service RR. CC=00 if RR is 4 or 8.

RR Indicates the SJF service or JES service.

4 = JES SPOOL I/O Error
8 = JES Memory Management Error
12 = SWB_MERGE
16 = PUTSWB
20 = JDTEXTRACT
24 = SWBTUREQ RETRIEVE
28 = SWBTUREQ SPLICE
32 = SWBTUREQ SPLIT

SSSFRFLG
Returned flag byte.

SSSFFIPA
IP address available in SWBTU buffer.

JES Job Information Services— SSI Function Code 71

The JES job information services (SSI function code 71) allows a user-supplied program to obtain information about jobs in the JES queues. Currently only JES2 supports this SSI function code. Most of the information provided via this SSI is very dependent on the version and level of JES2 you are currently running and requires a knowledge of JES2 data structures. Some of the information may be available in a version-independent format using other interfaces (such as SSI 80).

JES Job Information Services Request Types

Table 2. JES Job Information Services Request Types

Request Type	Function (SSJIFREQ)	Request Data Area Pointer (SSJIUSER)
“SPOOL Read Service” on page 88	SSJISIOM/SSJISIRS	IAZSLPIO
“JES2 Health monitor information” on page 96	SSJIMNOD/SSJIMNRS	IAZMOND
“Job Class Information” on page 110	SSJIFJCO/SSJIFJCR	IAZJBCLD
“Convert Device ID Service” on page 122	SSJICVDV	IAZCVDEV
“Checkpoint Version Information Service” on page 128	SSJIFOBT/SSJIFREL	IAZDSERV

- The JES job information interface is designed to be a general purpose interface to obtain access to JES internal data areas.
- Callers set the field SSJIFREQ in IAZSSJI to the function they want to have performed.
- SSJIUSER points to a data area that contains the data area needed to complete the request.

SPOOL Read Service

The SPOOL read service provides access to JES2 SPOOL data records. When requesting the SPOOL read service, the SSJIUSER field must point to a parameter area mapped by IAZSPLIO. Any SPOOL record can be read using SPOOL read including JOB or data set control blocks (mapped by $JCT, $IOT, $PDDB, etc.) or SYSIN and SYSOUT data records (mapped by $HDB and $LRC). The SPOOL read service can perform validation of the data read or just read the data at a particular location. The primary input to this function is the SPOOL address of the record to be read (MTTR). The MTTR for the JES2 $JCT data area can be obtained using the extended status SSI (SSI 80 field STJ2SPOL). MTTRs can also be obtained from other JES2 data areas.

Storage for the SPOOL record read is managed by the SPOOL read service. The SPOOL read service is composed of 2 function calls (set in SSJIFREQ). SSJISIOM requests that data be read. SSJISIRS releases any storage associated with the request. Multiple reads can be issued without a corresponding release request. Multiple read requests will use the same data buffer to store the data read. If an application needs to access multiple buffers at the same time, it should use multiple IAZSPLIO parameter areas (one per buffer).

Security authorization checking insures the user has authority to read the data on spool. For unauthorized (problem state) callers, a security authorization check will always be performed. For authorized (supervisor state) callers, a security authorization check will only be performed if requested. The actual security authorization check performed is dependent on the data (control block) that the caller is attempting to read. If identifying information about that control block can be located, an authorization check will be performed in the JESSPOOL class for a profile with a name of node.userid.jobname.jobid.SPOOLIO.cbname. If this identifying information cannot be located, then a more restrictive authorization check will be performed in the JESJOBS class, for a profile with a name of SPOOLIO.node.jobname.jobid.cbname, where:

- UNKNOWN can be used if JOBNAME is not available
- JOBID always starts with 'J' or 'JOB' and could be JOB00000
- UNKN can be used for cbname if the control block is not known.

JESJOBS profile checks will be used, for example, when the control block was created by JES2 that was running at a pre-z/OS V1R9 release level.

See the following sections for more information on SPOOL Read Service:

- “Type of Request”
- “Use Information” on page 89
- “Issued to” on page 89
- “Related SSI Codes” on page 89
- “Related Concepts” on page 89
- “Environment” on page 89
- “Input Register Information” on page 90
- “Input parameters” on page 90
- “Output Register Information” on page 93
- “Return Code Information” on page 93
- “Output Parameters” on page 94

Type of Request: Directed SSI Call.

Use Information: To use the JES job information services SSI, a caller must first decide the function they wish to perform. The appropriate parameter list must be obtained and pointed to by SSJIUSER.

Issued to: A JES2 subsystem (either primary or secondary). The subsystem does not have to be associated with the requesting address space.

Related SSI Codes: None.

Related Concepts: None.

Environment: The caller (issuer of the IEFSSREQ macro) must include the following mapping macros:

- CVT
- IEFJESCT

Data areas commonly referenced are mapped by the following mapping macros:

- IEFSSOBH
- IEFJSSIB
- IAZSSJI
- IAZSPLIO (SPOOL read service)

The caller must meet the following requirements:

Caller variable	Caller value
Minimum Authorization	Problem state, any PSW key
Dispatchable unit mode	Task
AMODE	24-bit or 31-bit
Cross memory mode	PASN=HASN=SASN
ASC mode	Primary
Interrupt status	Enabled for I/O and external interrupts
Locks	No locks held
Control Parameters	The SSOB, SSIB, IAZSSJI, and IAZSPLIO, control blocks can reside in 24- or 31-bit virtual storage
Recovery	The caller should provide an ESTAE-type recovery environment. See *z/OS MVS Programming: Assembler Services Guide*,for more information on an ESTAE-type recovery environment

Figure 11 on page 90 shows the environment at the time of the call for SSI function code 71, Spool Read Subfunction.

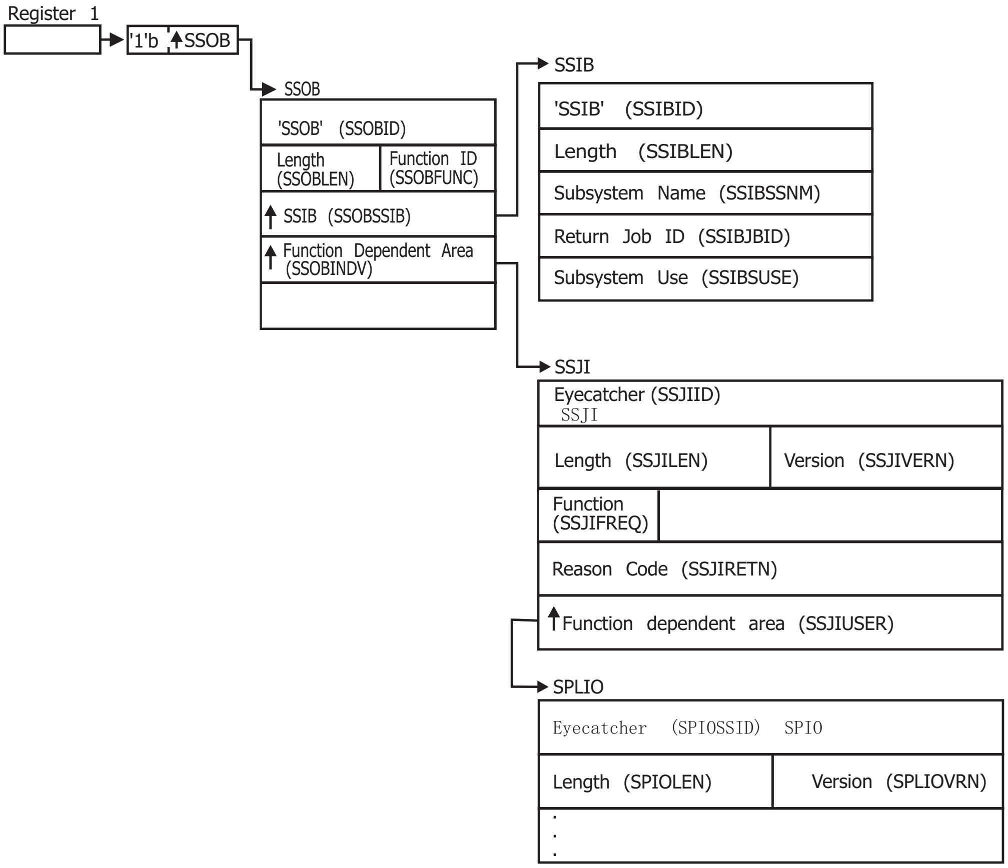
Register 1
'1'b
SSOB
SSOB
'SSOB' (SSOBID)
Length (SSOBLEN)
Function ID (SSOBFUNC)
SSIB (SSOBSSIB)
Function Dependent Area (SSOBINDV)
SSIB
'SSIB' (SSIBID)
Length (SSIBLEN)
Subsystem Name (SSIBSSNM)
Return Job ID (SSIBJBID)
Subsystem Use (SSIBSUSE)
SSJI
Eyecatcher (SSJIID)
SSJI
Length (SSJILEN)
Version (SSJIVERN)
Function (SSJIFREQ)
Reason Code (SSJIRETN)
Function dependent area (SSJIUSER)
SPLIO
Eyecatcher (SPIOSSID) SPIO
Length (SPIOLEN)
Version (SPLIOVRN)

Figure 11. Environment at Time of Call for SSI Function Code 71, Spool Read Subfunction

Input Register Information: Before issuing the IEFSSREQ macro, the caller must ensure that the following general purpose registers contain:

Register	**Contents**
1	Address of a 1-word parameter list that has the high-order bit on and a pointer to the SSOB control block in the low-order 31 bits.
13	Address of a standard 18-word save area.

Input parameters: Input parameters for the function routine are:

- SSOB
- SSIB
- IAZSSJI
- IAZSPLIO (SPOOL read service)

SSOB Contents: The caller sets the following fields in the SSOB control block on input:

Field Name	**Description**
SSOBID	Identifier 'SSOB'
SSOBLEN	Length of the SSOB (SSOBHSIZ) control block

SSOBFUNC
SSI function code 71(SSOBSSJI)

SSOBSSIB
Address of the SSIB control block or zero (if this field is zero, the life-of-job SSIB is used). See "Subsystem Identification Block (SSIB)" on page 8 for more information on the life-of-job SSIB

SSOBINDV
Address of the function-dependent area (IAZSSJI control block)

Set all other fields in the SSOB control block to binary zeros before issuing the IEFSSREQ macro.

SSIB Contents: If you don't use the life-of-job SSIB, the caller must provide an SSIB and set the following fields in the SSIB control block on input:

Field Name
Description

SSIBID
Identifier 'SSIB'

SSIBLEN
Length of the SSIB (SSIBSIZE) control block

SSIBSSNM
Subsystem name — name of the subsystem to which this Job Information Services request is directed

Set all other fields in the SSIB control block to binary zeros before issuing the IEFSSREQ macro.

IAZSSJI Contents: The caller must set the following fields in the IAZSSJI control block on input:

Field Name
Description

SSJIID
Eyecatcher for the control block (set to 'SSJI')

SSJILEN
Length of the IAZSSJI (SSJISIZE) control block

SSJISVRN
Input version of the IAZSSJI control block. Set to SSJISVR# for version 1 of the control block

SSJIFREQ
Function to be performed on this request. Valid functions and their related SSJIUSER area are:

Field Value
SSJIUSER Description

SSJISIOM
IAZSPLIO SPOOL read service, read record from SPOOL

SSJISIRS
IAZSPLIO SPOOL read service, release storage

SSJIUSER
Pointer to service specific data area '(IAZSPLIO)'

Set all other fields in the IAZSSJI control block to binary zeros before issuing the IEFSSREQ macro.

SPOOL read service, IAZSLPIO contents: For the SPOOL read service (function code SSJISIOM) the caller must set the following fields in the IAZSPLIO control block:

Field Name
Description

SPIOSSID
Eyecatcher of the control block (set to 'SPIO')

SPIOLEN
Length of the IAZSPLIO (SPIOSZE) control block

SPLIOVRN
Input version of the IAZSPLIO control block. Set to SPLIOVR1 for version 1 of the control block. Set to SPLIOVR# for the current (latest) version

SPIOSPAD
SPOOL address token of the record to be read. For JES2, the token value can be any of the following:

- A SPOOL address token returned by extended status: for example, **STJ2SPOL**, **STS2SPOL** or **STO2SPST**;
- An MTTR placed in the first four bytes, and the next four bytes set to zero;
- The first byte set to **X'FF'**, the second byte set to zero (**0**), and the remaining 6 bytes an MQTR.

SPIOCTYP
Optional input which specifies the type of control block that the caller expects to find at location SPIOSPAD after the spool read operation is complete. Validation of the data area will be performed if this field is specified. The possible values for SPIOCTYP, and the corresponding control block mapping macros used for validation are:

Field Value	Macro	Description
CHK	$CHK	Printer check record
HDB	$BUFFER	SYSIN/SYSOUT data buffer
IOT	$IOT	Data set information blocks. Contains the PDDBs
JCT	$JCT	JES2 job control table. Main job control block
NHSB	$NHSB	NJE headers and trailers
OCT	$OCT	/* OUTPUT JECL card descriptors
SIG	none	Signature record (record 0)
SWBI	$SWBIT	SYSOUT SWB information

SPIOJNAM
Optional input that requests that the job name in the data area read matches the value specified. Ignored if SPIOCTYP is not specified or set to 'SIG'.

SPIOJID
Optional input that requests that the JOBID in the data area read matches the value specified. Only the number portion of the JOBID is verified. Ignored if SPIOCTYP is not specified.

SPIOJKEY
Optional input that requests that the job key in the data area read matches the value specified. Ignored if SPIOCTYP is not specified.

SPIODSKY
Optional input that requests that the data set key in the data area read matches the value specified. Ignored if SPIOCTYP is not specified as 'HDB'.

SPIOSSNM
Optional input. When combined with SPIOASID, it requests that SYSOUT data buffers that have not been written to spool be obtained from the specified address space. SPIOSSNM is the name of the system on which the job is currently running and must be specified as either blanks or the name of the local system. For this type of request, SPIOCTYP must be set to 'HDB'.

SPIOASID
Optional input. When combined with SPIOSSNM, it requests that SYSOUT data buffers that have not been written to spool be obtained from the address space specified by SPIOASID.

SPIOOPT
Processing options flag byte.

SPIORACF
Perform authorization checking even if the caller is authorized.

Set all other fields in the IAZSPLIO control block to binary zeros before issuing the IEFSSREQ macro.

For the SPOOL read service function codes SSJISIRS (release storage), the caller should not alter any fields in the IAZSPLIO control block returned on the last SSJISIOM function call.

Output Register Information: When control returns to the caller, the general purpose registers contain:

Register	Contents
0	Used as a work register by the system
1	Address of the SSOB control block
2 — 13	Same as on entry to call
14	Return address
15	Return code

Return Code Information: The SSI places one of the following decimal return codes in register 15. Examine the return code to determine if the request was processed.

Return Code (Decimal)
Meaning

SSRTOK (0)
The job information services request completed. Check the SSOBRETN field for specific function information.

SSRTNSUP (4)
The subsystem specified in the SSIBSSNM field does not support the job information services function call.

SSRTNTUP (8)
The subsystem specified in the SSIBSSNM field exists but is not active.

SSRTNOSS (12)
The subsystem specified in the SSIBSSNM field is not defined to MVS.

SSRTDIST (16)
The pointer to the SSOB control block or the SSIB control block is not valid, or the function code specified in the SSOBFUNC field is greater than the maximum number of functions supported by the subsystem specified in the SSIBSSNM field.

SSRTLERR (20)
Either the SSIB control block or the SSOB control block has incorrect lengths or formats.

SSRTNSSI(24)
The SSI has not been initialized.

Output Parameters: Output parameters for the function routine are:

- SSOBRETN
- SSJIRETN
- IAZSPLIO (SPOOL read service)

SSOBRETN Contents: When control returns to the caller and register 15 contains a zero, the job information services function places one of the following decimal values in the SSOBRETN field:

Value (Decimal)
Meaning

SSJIOK (0)
Request successful.

SSJIERVR (4)
Request completed with possible errors, see SSJIRETN for reason code.

SSJIERRU (8)
Request cannot be completed because of user error, see SSJIRETN for reason code.

SSJIERRJ (12)
Request cannot be completed, SSJIRETN contains internal reason code.

SSJIPARM (16)
Error in the parameter list, ie, the SSJI extension is an invalid format - it is not an SSJI, the service version number is not supported, or the SSJI is not large enough.

SSJIRETN Contents: In addition to the return code in SSOBRETN, the field SSJIRETN contains the service related error or more specific information about the error. SSJIRETN can be set to the following values if SSOBRETN = SSJIERRU (8):

Value (Decimal)
Meaning

SSJIUNSF (4)
Unsupported subfunction requested.

SSJINTDS (24)
SSJIUSER does not point to the correct control block.

SSJIUNSD (28)
Version number in the control block pointed to by SSJIUSER is not correct.

SSJISMDS (32)
Length field in the control block pointed to by SSJIUSER is too small.

Return codes in SSJIRETN specific to the SPOOL read service: The following return codes are set if the SPOOL read service was requested and SSOBRETN is zero:

Value (Decimal)
Meaning

SPIOOK (0)
Success

SPIONTVF (4)
Control block verification failed

SPIOCBIO (8)
SPOOL control block I/O error

SPIOCBTK (12)
SPOOL control block track address

SPIOCBNG (16)
General control block problem

SPIOSTRG (20)
Error obtaining 31-bit storage

SPIOSJER (24)
Error obtaining 24-bit storage

SPIOILOG (28)
A logic error has occurred

SPIONSPL (32)
SPIOSTRP not initialized correctly

SPIONBUF (36)
Could not locate instorage buffer. Most likely, the buffer has been written to SPOOL and is no longer in memory.

SPIONSAF (40)
Authorization (SAF) failure accessing data.

SPOOL read service, IAZSPLIO contents: For the SPOOL read service (function code SSJISIOM) the following is returned in IAZSPLIO:

Field Name
Description

SPIOVERO
Subsystem version number (currently 1)

SPIOOUTA
Address of buffer obtained. This is a pointer directly to the SPOOLed data area (the $SPID). Normally, pointers to the data areas point to a prefix area; this does not.

SPIOOLEN
Length of the data area returned (not including the prefix area).

SPIOND1
Indicator field.

Value (Decimal)
Meaning

SPIONSTG
The control block was retrieved from an instorage buffer.

JES2 Health monitor information

The JES2 Health Monitor information service provides diagnostic information about JES2. The information returned is the same data returned by $J commands. for more information about the JES2 Health Monitor see the appendix on miscellaneous JES2 facilities in the *z/OS JES2 Initialization and Tuning Guide*.

See the following sections for more information on JES2 Health Monitor Information:

- "Type of Request"
- "Use Information"
- "Issued to"
- "Related SSI Codes"
- "Related Concepts"
- "Environment"
- "Input Register Information" on page 98
- "Input Parameters" on page 98
- "Output Register Information" on page 101
- "Return Code Information" on page 101
- "Output Parameters" on page 102

Type of Request: Directed SSI Call.

Use Information: To use the JES job information services SSI, a caller must first decide the function they wish to perform. The appropriate parameter list must be obtained and pointed to by SSJIUSER.

Issued to: A JES2 subsystem (either primary or secondary). The subsystem does not have to be associated with the requesting address space.

Related SSI Codes: None.

Related Concepts: None.

Environment: The caller (issuer of the IEFSSREQ macro) must include the following mapping macros:

- CVT
- IEFJESCT

Data areas commonly referenced are mapped by the following mapping macros:
- IEFSSOBH
- IEFJSSIB
- IAZSSJI
- IAZMOND (JES2 Health Monitor Information)

The caller must meet the following requirements:

Caller variable	**Caller value**
Minimum Authorization	Problem state, any PSW key
Dispatchable unit mode	Task
AMODE	24-bit or 31-bit
Cross memory mode	PASN=HASN=SASN
ASC mode	Primary
Interrupt status	Enabled for I/O and external interrupts
Locks	No locks held
Control Parameters	The SSOB, SSIB, IAZSSJI, and IAZMONDcontrol blocks can reside in 24- or 31-bit virtual storage
Recovery	The caller should provide an ESTAE-type recovery environment. See *z/OS MVS Programming: Assembler Services Guide*for more information on an ESTAE-type recovery environment

Figure 12 on page 98 shows the environment at the time of the call for SSI function code 71, JES2 Health Monitor Information Subfunction.

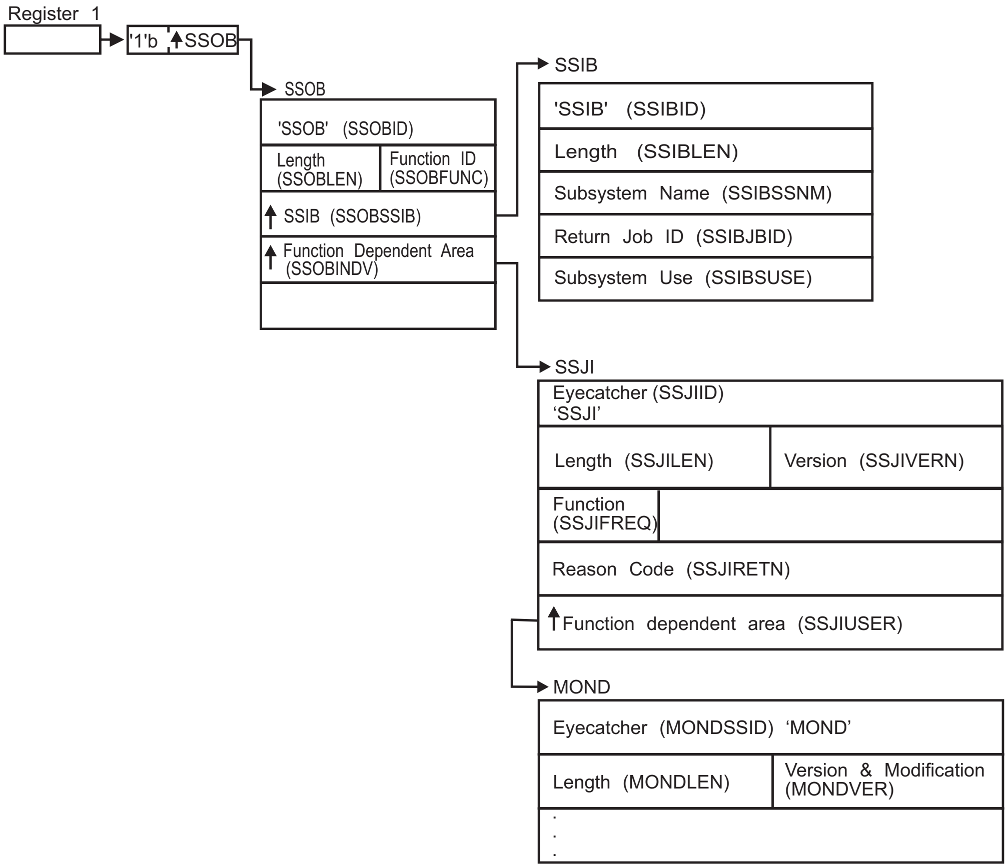
Register 1
'1'b
SSOB
SSOB
'SSOB' (SSOBID)
Length (SSOBLEN)
Function ID (SSOBFUNC)
SSIB (SSOBSSIB)
Function Dependent Area (SSOBINDV)
SSIB
'SSIB' (SSIBID)
Length (SSIBLEN)
Subsystem Name (SSIBSSNM)
Return Job ID (SSIBJBID)
Subsystem Use (SSIBSUSE)
SSJI
Eyecatcher (SSJIID) 'SSJI'
Length (SSJILEN)
Version (SSJIVERN)
Function (SSJIFREQ)
Reason Code (SSJIRETN)
Function dependent area (SSJIUSER)
MOND
Eyecatcher (MONDSSID) 'MOND'
Length (MONDLEN)
Version & Modification (MONDVER)

Figure 12. Environment at Time of Call for SSI Function Code 71, JES2 Health Monitor Information Subfunction

Input Register Information: Before issuing the IEFSSREQ macro, the caller must ensure that the following general purpose registers contain:

Register	Contents
1	Address of a 1-word parameter list that has the high-order bit on and a pointer to the SSOB control block in the low-order 31 bits.
13	Address of a standard 18-word save area.

Input Parameters: Input parameters for the function routine are:

- SSOB
- SSIB
- IAZSSJI
- IAZMOND (JES2 Health Monitor Information)

SSOB Contents: The caller sets the following fields in the SSOB control block on input:

Field Name	Description
SSOBID	Identifier 'SSOB'

SSOBLEN
Length of the SSOB (SSOBHSIZ) control block

SSOBFUNC
SSI function code 71(SSOBSSJI)

SSOBSSIB
Address of the SSIB control block or zero (if this field is zero, the life-of-job SSIB is used). See "Subsystem Identification Block (SSIB)" on page 8 for more information on the life-of-job SSIB

SSOBINDV
Address of the function-dependent area (IAZSSJI control block)

Set all other fields in the SSOB control block to binary zeros before issuing the IEFSSREQ macro.

SSIB Contents: If you don't use the life-of-job SSIB, the caller must provide an SSIB and set the following fields in the SSIB control block on input:

Field Name
Description

SSIBID
Identifier 'SSIB'

SSIBLEN
Length of the SSIB (SSIBSIZE) control block

SSIBSSNM
Subsystem name — name of the subsystem to which this Job Information Services request is directed

Set all other fields in the SSIB control block to binary zeros before issuing the IEFSSREQ macro.

IAZSSJI Contents: The caller must set the following fields in the IAZSSJI control block on input:

Field Name
Description

SSJIID
Eyecatcher for the control block (set to 'SSJI')

SSJILEN
Length of the IAZSSJI (SSJISIZE) control block

SSJISVRN
Input version of the IAZSSJI control block. Set to SSJISVR# for version 1 of the control block

SSJIFREQ
Function to be performed on this request. Valid functions and their related SSJIUSER area are:

Field Value
SSJIUSER Description

SSJIMNOD
IAZMOND JES2 Health Monitor information, obtain data

SSJIMNRS
IAZMOND JES2 Health Monitor information, release storage

SSJIUSER
Pointer to service specific data area (IAZMOND)

Set all other fields in the IAZMOND control block to binary zeros before issuing the IEFSSREQ macro.

JES2 Health Monitor Information, IAZMOND contents: For the JES2 Health Monitor information service (function code SSJIMNOD) the caller must set the following fields in the IAZMOND control block on input to a SSJIMNOD function call:

Field Name
Description

MONDSSID
Eyecatcher of the control block (set to 'MOND')

MONDLEN
Length of the IAZMOND (MONDSZE) control block

MONDVER
Input version and modifier of the IAZMOND control block. Set to MONDV020 for version 2 of the control block. Set to MONDCVRL and MNDCVRM for the current (latest) version and modifier.

MONDVERL
Version level

MONDVERM
Version modifier

MONDSTRP
Storage management anchor for use by the subsystem that responds to this request. It is expected that the caller will set this field to zero the first time IAZMOND is used and from that point on the field will be managed by the subsystem.

MONDSEL1
Information selection flag byte 1

MONDSRES
Resource usage statistics

MONDSMTS
Main task CPU statistics

MONDSERR
JES2 ERROR statistics

MONDSWTS
Main task WAIT statistics

MONDSJSA
JES2 Alerts

MONDSJSN
JES2 Notices

MONDSJST
JES2 Tracks

MONDSSTO
JES2 storage usage statistcs

MONDSEL2
Information selection flag byte 2

MONDSMNS
Monitor status information

MONDHSTC
History count limit.

The JES2 Health Monitor maintains a history for some statistics (resource usage, CPU statistics, and error statistics). In general, these statistics are reset at the beginning of each hour and hourly statistics are maintained for as long as the JES2 Health Monitor is running. The amount of history returned can be limited by setting MONDHSTC to the number of history elements to return. Setting MONDHSTC to 0 or 1 will return only the current data. Setting it to 5 will return the 5 most recent history elements. Setting it to X'FFFF'' will return all history elements.

MONDHSTC only applies when setting MONDSRES, MONDSMTS, or MONDSERR in MONDSEL1.

MONDRSNM
Resource name filter.

If MONDSEL1 is set to MONDSRES, them MONDRSNM can be set to the resource name for which information is to be returned (left justified and padded with blanks). Generics (* and ?) are allowed. Setting the first byte of MONDRSNM to zero or blanks is the same as setting MONDRSNM to '* '. All resources are returned.

Set all other fields in the IAZMOND control block to binary zeros before issuing the IEFSSREQ macro.

For the JES2 Health Monitor Information service function codes SSJIMNRS (release storage), the caller should set MONDSTRP in the IAZMOND control block to indicate the storage to be released.

Output Register Information: When control returns to the caller, the general purpose registers contain:

Register	Contents
0	Used as a work register by the system
1	Address of the SSOB control block
2 - 13	Same as on entry to call
14	Return address
15	Return code

Return Code Information: The SSI places one of the following decimal return codes in register 15. Examine the return code to determine if the request was processed.

Return Code (Decimal)
Meaning

SSRTOK (0)
The job information services request completed. Check the SSOBRETN field for specific function information.

SSRTNSUP (4)
The subsystem specified in the SSIBSSNM field does not support the job information services function call.

SSRTNTUP (8)
The subsystem specified in the SSIBSSNM field exists but is not active.

SSRTNOSS (12)
The subsystem specified in the SSIBSSNM field is not defined to MVS.

SSRTDIST (16)
The pointer to the SSOB control block or the SSIB control block is not valid, or the function code specified in the SSOBFUNC field is greater than the maximum number of functions supported by the subsystem specified in the SSIBSSNM field.

SSRTLERR (20)
Either the SSIB control block or the SSOB control block has incorrect lengths or formats.

SSRTNSSI(24)
The SSI has not been initialized.

Output Parameters: Output parameters for the function routine are:

- SSOBRETN
- SSJIRETN
- IAZMOND (JES2 Health Monitor information)

SSOBRETN Contents: When control returns to the caller and register 15 contains a zero, the job information services function places one of the following decimal values in the SSOBRETN field:

Value (Decimal)
Meaning

SSJIOK (0)
Request successful.

SSJIERVR (4)
Request completed with possible errors, see SSJIRETN for reason code.

SSJIERRU (8)
Request cannot be completed because of user error, see SSJIRETN for reason code.

SSJIERRJ (12)
Request cannot be completed, SSJIRETN contains internal reason code.

SSJIPARM (16)
The parameter list, ie, the SSJI extension is an invalid format - it is not an SSJI, the service version number is not supported, or the SSJI is not large enough.

SSJIRETN Contents: In addition to the return code in SSOBRETN, the field SSJIRETN contains the service related error or more specific information about the error. SSJIRETN will be set to one of the following decimal values:

When SSOBRETN is SSJIERVR (4):

Value (Decimal)
Meaning

MONDNMON (4)
JES2 Health Monitor address space is down

| **ALESERV (136)**
| ALESERV error.

When SSOBRETN is SSJIERRU (8):

Value (Decimal)
Meaning

SSJIUNSF (4)
Unsupported subfunction requested

MONDIERR (12)
Input error (no information selection flags set)

MONDSTRE (16)
MONDSTRP not set correctly

SSJINTDS (24)
SSJIUSER does not point to the correct data area

SSJIUNSD (28)
SSJIUSER CB version number is not correct

SSJISMDS (32)
SSJIUSER CB length is too small

Return codes in SSJIRETN specific to the JES2 Health Monitor Information service: The following return codes are set if the JES2 Health Monitor Information service was request and SSOBRETN is zero:

Value (Decimal)
Meaning

MONDOK (0)
Success

JES2 Health Monitor Information service, IAZMOND contents For the JES2 Health Monitor Information service (function code SSJIMNOD), two types of data are returned in the IAZMOND. The fixed data section and the section which contains elements for each type of usage statistic that matched the filters specified:

Field Name
Description

MONDVERO
Subsystem version/modifier number.

MONDPERF
Performance index for last performed request.

MONDSTAT
Status indicator for JES2 and the JES2 Health Monitor.

MONDJDWN
JES2 is down

MONDMDWN
Health Monitor is down

MONDRESQ
Pointer to resource usage statistics (MDRSDATA)

MONDCPUS
Pointer to main task CPU statistics (MDCPDATA)

MONDERRC
Pointer to JES2 ERROR statistics (MDERDATA)

MONDWAIT
Pointer to main task WAIT statistics (MDERDATA)

MONDMSGS
Pointer to JES2 Alert/Track/Notice messages (MDMSDATA)

MONDMONI
Pointer to JES2 Health Monitor status information (MDMIDATA)

MONDSTRU
Pointer to JES2 storage usage statistics (MDSTDATA)

MONDSZE1
Version 1 size

MONDSZE2
Version 2 size

Resource Usage Statistics Elements: For each resource, an information element is added to the chain pointed to by MONDRESQ. Each element contains a fixed size prefix (mapped by the MDRSDATA DSECT) and one or more fixed size time entries (mapped by the MDRSNTRY DSECT).

The fields in the MDRSDATA prefix are:

Field Name
Description

MDRSEYE
Eyecatcher 'MDRS'

MDRSNEXT
Next MDRS entry

MDRSNAME
Resource name

MDRSENTO
Offset to first time entry

MDRSCNT
Number of time entries

MDRSENTL
Length of a time entry

MDRSFLG1
General flag byte

MDRS1OVR
Resource currently over warning level

The fields in the MDRSNTRY time entry are:

Field Name	Description
MDRSTIME	Time interval started (STCKE)
MDRSLIMT	Current upper limit
MDRSINUS	Current number in use
MDRSLOW	Low usage value
MDRSHIGH	High usage value
MDRSAVRG	Average in use value
MDRSWARN	Warn level (%)
MDRSOVER	Usage over warn level (% * 100)

Main Task CPU Statistics Elements: Each element contains a fixed size prefix (mapped by MDCPDATA DSECT) and one or more fixed size time entries (mapped by MDCPNTRY DSECT).

The fields in the MDCPDATA prefix are:

Field Name	Description
MDCPEYE	Eyecatcher 'MDCP'
MDCPENTO	Offset to first time entry
MDCPCNT	Number of time entries
MDCPENTL	Length of a time entry

The fields in the MDCPNTRY time entry are:

Field Name	Description
MDCPTIME	Time interval started (STCKE)
MDCPACT	Active sample count
MDCPIDLE	Idle sample count
MDCPWAIT	Wait sample count

MDCPLLOK
Local lock sample count

MDCPNDSP
Non Dispatchable count

MDCPPAGE
Page wait sample count

MDCPDMVS
Awaiting MVS dispatch count

JES2 ERROR Statistics Elements: For each error, an information element is added to the chain pointed to by MONDERRC. Each element contains a fixed size prefix (mapped by the MDERDATA DSECT) and one or more fixed size time entries (mapped by the MDERNTRY DSECT).

The fields in the MDERDATA prefix are:

Field Name	Description
MIDEREYE	Eyecatcher 'MDER'
MDERNEXT	Next MDER entry
MDERNAME	Error name
MDERENTO	Offset to first time entry
MDERCNT	Number of time entries
MDERENTL	Length of a time entry

The fields in the MDERNTRY time entry are:

Field Name	Description
MDERTIME	Time interval started (STCKE)
MDERCOUN	Error count
MDERTYPE	Error category
MIDERMAIN	Main task
MDERDIST	DISTERR
MDERCBIO	CBIO error
MDEROTHER	Other

MDERSTSK
JES2 Subtask

Main Task WAIT Statistics Elements: Each element contains a fixed size prefix (mapped by MDWTDATA DSECT) and one or more fixed size time entries (mapped by MDWTNTRY DSECT).

The fields in the MDWTDATA prefix are:

Field Name	Description
MDWTEYE	Eyecatcher 'MDWT'
MDWTENTO	Offset to first time entry
MDWTCNT	Number of wait entries
MDWTENTL	Length of a wait entry

The fields in the MDWTNTRY time entry are:

Field Name	Description
MDWTSTCK	Time of most recent wait (STCKE)
MDWTADDR	Address of wait (from RB)
MDWTWCNT	Count of waits detected
MDWTSCNT	Count of matching samples
MDWTNAME	Module name from wait
MDWTOFFS	Offset of wait in module
MDWTPCE	Name of PCE in control (or MULTIPLE)
MDWTEXIT	Exit number in control **NONE** Wait while JES2 was in control **Exit #** Wait while this exit was in control **MULTEXIT** Multiple exits were in control **MULTIPLE** JES2 and exit code in control

MDWTFLAG
Wait flag byte

MDWTFINI
JES2 was initializing

MDWTFTRM
JES2 was terminating

JES2 Alert/Track/Notice Messages Elements: Each element contains one or more fixed size entries (mapped by MDMSDATA).

The fields in the MDMSDATA entry are:

Field Name
Description

MDMSEYE
Eyecatcher 'MDMS'

MDMSNEXT
Next MDMS entry

MDMSLEN
Length of entry

MDMSTIME
Time condition started (STCKE). Only for Alerts and Tracks.

MDMSTYPE
Message type

MDMSTALR
Alert message

MDMSTTRK
Track message

MDMSTNOT
Notice message

MDMDL1LN
Length of first line of message

MDMDL1TX
Text of first line of message

MDMDL2LN
Length of second line of message

MDMDL2TX
Text of second line of message

MDMDL3LN
Length of third line of message

MDMDL3TX
Text of third line of message

MDMDL4LN
Length of fourth line of message

MDMDL4TX
Text of fourth line of message

JES2 Health Monitor status information elements: Each element contains a fixed size prefix (mapped by MDMIDATA DSECT) and one or more fixed size subtask entries (mapped by MDMINTRY DSECT).

The fields in the MDMIDATA entry are:

Field Name	Description
MDMIEYE	Eyecatcher 'MDMI'
MDMIENTO	Offset to first subtask entry
MDMICNT	Number of subtask entries
MDMIENTL	Length of a subtask entry

The fields in the MDMINTRY subtask entry are:

Field Name	Description
MDMINAME	Name of monitor task
MDMISTAT	Current task status
MDMIINFO	Status information for subtask

JES2 Storage Usage Statistics Elements: Each element contains a fixed size prefix (mapped by MDSTDATA DSECT) and one or more fixed size time entries (mapped by MDSTNTRY DSECT).

The fields in the MDSTDATA entry are:

Field Name	Description
MDSTEYE	Eyecatcher 'MDST'
MDSTNEXT	Next MDST entry
MDSTNAME	Storage area description
MDSTENTO	Offset to first time entry
MDSTCNT	Number of time entries
MDSTENTL	Length of a time entry

The fields in the MDSTNTRY time entry are:

Field Name	Description
MDSTTIME	Interval start time (STCKE)
MDSTREGN	Current region size (bytes)
MDSTUSE	Current bytes in use
MDSTLOW	Low usage value (bytes)
MDSTHIGH	High usage value (bytes)
MDSTAVRG	Average usage value (bytes)

Job Class Information

The job class information service provides the attributes of a job class.

See the following sections for more information on Job Class Information:
- "Type of Request"
- "Use Information"
- "Issued to"
- "Related SSI Codes"
- "Related Concepts"
- "Environment"
- "Input Register Information" on page 112
- "Input Parameters" on page 112
- "Output Register Information" on page 114
- "Return Code Information" on page 114
- "Output Parameters" on page 114

Type of Request: Directed SSI Call.

Use Information: To use the JES job information services SSI, a caller must first decide the function they wish to perform. The appropriate parameter list must be obtained and pointed to by SSJIUSER.

Issued to: A JES2 subsystem (either primary or secondary). The subsystem does not have to be associated with the requesting address space.

Related SSI Codes: None.

Related Concepts: None.

Environment: The caller (issuer of the IEFSSREQ macro) must include the following mapping macros:
- CVT
- IEFJESCT

Data areas commonly referenced are mapped by the following mapping macros:

- IEFSSOBH
- IEFJSSIB
- IAZSSJI
- IAZJBCLD (Job Class Information)

The caller must meet the following requirements:

Caller variable	**Caller value**
Minimum Authorization	Problem state, any PSW key
Dispatchable unit mode	Task
AMODE	24-bit or 31-bit
Cross memory mode	PASN=HASN=SASN
ASC mode	Primary
Interrupt status	Enabled for I/O and external interrupts
Locks	No locks held
Control Parameters	The SSOB, SSIB, IAZSSJI, and IAZJBCLD control blocks can reside in 24- or 31-bit virtual storage
Recovery	The caller should provide an ESTAE-type recovery environment. See *z/OS MVS Programming: Assembler Services Guide*for more information on an ESTAE-type recovery environment

Figure 13 shows the environment at the time of the call for SSI function code 71, Job Class Information Subfunction.

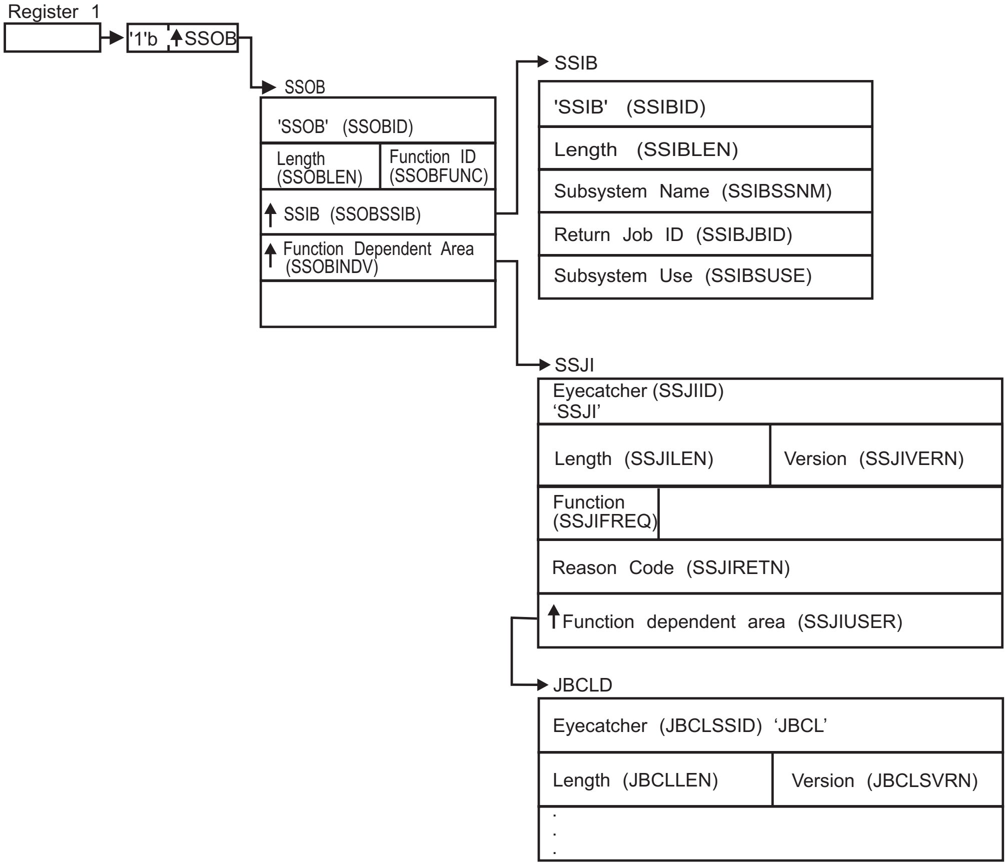
Register 1
'1'b
SSOB
SSOB
'SSOB' (SSOBID)
Length (SSOBLEN)
Function ID (SSOBFUNC)
SSIB (SSOBSSIB)
Function Dependent Area (SSOBINDV)
SSIB
'SSIB' (SSIBID)
Length (SSIBLEN)
Subsystem Name (SSIBSSNM)
Return Job ID (SSIBJBID)
Subsystem Use (SSIBSUSE)
SSJI
Eyecatcher (SSJIID) 'SSJI'
Length (SSJILEN)
Version (SSJIVERN)
Function (SSJIFREQ)
Reason Code (SSJIRETN)
Function dependent area (SSJIUSER)
JBCLD
Eyecatcher (JBCLSSID) 'JBCL'
Length (JBCLLEN)
Version (JBCLSVRN)

Figure 13. Environment at Time of Call for SSI Function Code 71, Job Class Information Subfunction

Input Register Information: Before issuing the IEFSSREQ macro, the caller must ensure that the following general purpose registers contain:

Register	Contents
1	Address of a 1-word parameter list that has the high-order bit on and a pointer to the SSOB control block in the low-order 31 bits.
13	Address of a standard 18-word save area.

Input Parameters: Input parameters for the function routine are:

- SSOB
- SSIB
- IAZSSJI
- IAZJBCLD (Job Class Information)

SSOB Contents: The caller sets the following fields in the SSOB control block on input:

Field Name	Description
SSOBID	Identifier 'SSOB'
SSOBLEN	Length of the SSOB (SSOBHSIZ) control block
SSOBFUNC	SSI function code 71(SSOBSSJI)
SSOBSSIB	Address of the SSIB control block or zero (if this field is zero, the life-of-job SSIB is used). See "Subsystem Identification Block (SSIB)" on page 8 for more information on the life-of-job SSIB
SSOBINDV	Address of the function-dependent area (IAZSSJI control block)

Set all other fields in the SSOB control block to binary zeros before issuing the IEFSSREQ macro.

SSIB Contents: If you don't use the life-of-job SSIB, the caller must provide an SSIB and set the following fields in the SSIB control block on input:

Field Name	Description
SSIBID	Identifier 'SSIB'
SSIBLEN	Length of the SSIB (SSIBSIZE) control block
SSIBSSNM	Subsystem name — name of the subsystem to which this Job Information Services request is directed

Set all other fields in the SSIB control block to binary zeros before issuing the IEFSSREQ macro.

IAZSSJI Contents: The caller must set the following fields in the IAZSSJI control block on input:

Field Name
Description

SSJIID
Eyecatcher for the control block (set to 'SSJI')

SSJILEN
Length of the IAZSSJI (SSJISIZE) control block

SSJISVRN
Input version of the IAZSSJI control block. Set to SSJISVR# for version 1 of the control block

SSJIFREQ
Function to be performed on this request. Valid functions and their related SSJIUSER area are:

Field Value
Description

SSJIFJCO
IAZJBCLD Job Class information service, obtain data

SSJIFJCR
IAZJBCLD Job Class information service, return storage

SSJIUSER
Pointer to service specific data area (IAZJBCLD)

Set all other fields in the IAZSSJI control block to binary zeros before issuing the IEFSSREQ macro.

Job Class Information service, IAZJBCLD contents: For the job class information service (function code SSJIFJCO) the caller must set the following fields in the IAZJBCLD control block:

Field Name
Description

JBCLSSID
Eyecatcher of the control block (set to 'JBCL')

JBCLLEN
Length of the IAZJBCLD (JBCLSZE) control block

JBCLSVRN
Input version of the IAZJBCLD control block. Set to JBCLSVR# for the current (latest) version.

JBCLSTRP
Storage management anchor for use by the subsystem that responds to this request. It is expected that the caller will set this field to zero the first time IAZJBCLD is used and from that point on the field will be managed by the subsystem.

JBCLFLAG
Flag byte

JBCL1JOB
Return a particular job class indicated by JBCLNAM

JBCLJNAM
Single job class to be returned.

Set all other fields in the IAZJBCLD control block to binary zeros before issuing the IEFSSREQ macro.

For the Job Class information service function codes SSJIFJCR (return storage), the caller should set JBCLSTRP in the IAZJBCLD control block to indicate the storage to be released.

Output Register Information: When control returns to the caller, the general purpose registers contain:

Register	**Contents**
0	Used as a work register by the system
1	Address of the SSOB control block
2 — 13	Same as on entry to call
14	Return address
15	Return code

Return Code Information: The SSI places one of the following decimal return codes in register 15. Examine the return code to determine if the request was processed.

Return Code (Decimal)	**Meaning**
SSRTOK (0)	The job information services request completed. Check the SSOBRETN field for specific function information.
SSRTNSUP (4)	The subsystem specified in the SSIBSSNM field does not support the job information services function call.
SSRTNTUP (8)	The subsystem specified in the SSIBSSNM field exists but is not active.
SSRTNOSS (12)	The subsystem specified in the SSIBSSNM field is not defined to MVS.
SSRTDIST (16)	The pointer to the SSOB control block or the SSIB control block is not valid, or the function code specified in the SSOBFUNC field is greater than the maximum number of functions supported by the subsystem specified in the SSIBSSNM field.
SSRTLERR (20)	Either the SSIB control block or the SSOB control block has incorrect lengths or formats.
SSRTNSSI(24)	The SSI has not been initialized.

Output Parameters: Output parameters for the function routine are:

- SSOBRETN

- SSJIRETN
- IAZJBCLD (Job Class Information service)

SSOBRETN Contents: When control returns to the caller and register 15 contains a zero, the job information services function places one of the following decimal values in the SSOBRETN field:

Value (Decimal)
Meaning

SSJIOK (0)
Request successful.

SSJIERVR (4)
Request completed with possible errors, see SSJIRETN for reason code.

SSJIERRU (8)
Request cannot be completed because of user error, see SSJIRETN for reason code.

SSJIERRJ (12)
Request cannot be completed, SSJIRETN contains internal reason code.

SSJIPARM (16)
The parameter list, ie, the SSJI extension is an invalid format - it is not an SSJI, the service version number is not supported, or the SSJI is not large enough.

SSJIRETN Contents: In addition to the return code in SSOBRETN, the field SSJIRETN contains the service related error or more specific information about the error. SSJIRETN will be set to one of the following decimal values when SSOBRETN is not zero:

Value (Decimal)
Meaning

SSJIUNSF (4)
Unsupported subfunction requested

SSJINTDS (24)
SSJIUSER does not point to the correct data area

SSJIUNSD (28)
SSJIUSER control block version number is not correct

SSJISMDS (32)
SSJIUSER control block length is too small

Return codes in SSJIRETN specific to the Job Class Information service: The following return codes are set if the Job Class Information service was requested and SSOBRETN is zero:

Value (Decimal)
Meaning

SSJIOK (0)
Success

Job Class Information service, IAZJBCLD contents: For the Job Class Information service (function code SSJIFJCO), two types of data, fixed data in the IAZJBCLD and elements for each job class that match the filters specified. The following describes the fixed data fields returned in the IAZJBCLD:

Field Name
Description

JBCLVERO
Subsystem version number (currently 4)

JBCLSMCL
STC message class

JBCLTMCL
TSU message class

JBCLDPTR
Pointer to first job class data buffer

JBCLNJC
Number of job classes returned

Job Class Information Elements: Each element contains a header and two sections, class attribute table and member specific attributes. The class attribute table and member specific sections contain a prefix and data section.

Job Class Information Element header (mapped by JBCLDHDR DSECT):

Field Name
Description

JBCTEYE
Eyecatcher 'DCAT'

JBCTOHDR
Offset to first section

JBCTNEXT
Address of next CAT

JBCLDHSZ
Size of header

Class Attribute Table Prefix section (mapped by JBCTPREF DSECT):

Field Name
Description

JBCTHDLN
Length of entire job class entry (maximum value is 65535)

JBCTHDTP
Type of this section

JBCTHDMD
Modifier

JBCTHDSZ
Size of prefix section

Class Attribute Table Data section (mapped by JBCLDCAT DSECT):

Field Name
Description

JBCTLEN
Length of job class data section

JBCTTYPE
Type of this section (JBCLTCAT)

JBCTMOD
Modifier

JBCJOBFL
Job flags

- **JBCBATCH**
  Batch job
- **JBCTSUJB**
  Time sharing user
- **JBCTCJB**
  System task
- **JBCVALJB**
  Valid job types
- **JBCNOJNL**
  No journal option
- **JBCNOUPT**
  No output option
- **JBCTSCAN**
  TYPRUN=SCAN was specified
- **JBCTCOPY**
  TYPRUN=COPY was specified
- **JBCRSTRT**
  Allow warm start to re-que for execution

JBCJBOPT
Job options flag

- **JBCTHOLD**
  TYPRUN=HOLD
- **JBCNOLOG**
  No job log option
- **JBCXBMII**
  XBM II job
- **JBCQHELD**
  Class queue is held

JBCPROCN
Procedure library number

JBCSMFLG
SMF Flag

- **JBCNOUSO**
  Do not take IEFUSO exit
- **JBCNOTY6**
  Do not produce Type 6 SMF record
- **JBCNOUJP**
  Do not take IEFUJP exit

- **JBCNOT26**
  Do not produce Type 26 SMF record

JBCPERFM
Default performance group

JBCCPBGN
Beginning of converter parameters

JBCCACCT
Accounting information flag

- **JBCCNONE**
  No information is required
- **JBCCNAME**
  Programmer required
- **JBCCNUMB**
  Account number required
- **JBCCALL**
  Programmer and account number required
- **JBCCSWAL**
  SWA above 16M line

JBCCTIME
Default job step interval time

- **JBCCMNTE**
  Maximum minutes
- **JBCCSECS**
  Maximum seconds

JBCCREGN
Default job step region

- **JBCCRGN**
  Numeric specification
- **JBCCRGA**
  Kilobytes or megabytes specification

JBCCMND
Command disposition

- **JBCCEXEC**
  Pass the command through
- **JBCCDSPL**
  Display and then pass command
- **JBCCVER**
  Ask operator disposition
- **JBCCIGN**
  Ignore the command

JBCCBLP
Bypass label processing option

- **JBCCBLPY**
  Process bypass label parm

JBCCOCG
Operator command group

- **JBCCGSYS**
  Group 1 commands (SYS)
- **JBCCGIO**
  Group 2 commands (I/O)
- **JBCCGCON**
  Group 3 commands (CONS)
- **JBCCGALL**
  All command groups

JBCCLJCL
Default MSGLEVEL, JCL listed if not MSGLEVEL

JBCCTMSG
Allocation termination messages

JBCCONVP
End of converter parameters

JBCOPSWT
Converter option switches

JBCFLAG1
Normal OUTDISP for JESDS

- **JBC1CDP**
  Conditionally purge output for jobs in this class
- **JBC1NODP**
  NORMAL OUTDISP=PURGE
- **JBC1NODW**
  NORMAL OUTDISP=WRITE
- **JBC1NODH**
  NORMAL OUTDISP=HOLD
- **JBC1NODK**
  NORMAL OUTDISP=KEEP
- **JBC1NODL**
  NORMAL OUTDISP=LEAVE

JBCFLAG2
Abnormal OUTDISP for JESDS

- **JBC1AODP**
  ABNORMAL OUTDISP=PURGE
- **JBC1AODW**
  ABNORMAL OUTDISP=WRITE
- **JBC1AODH**
  ABNORMAL OUTDISP=HOLD
- **JBC1AODK**
  ABNORMAL OUTDISP=KEEP
- **JBC1AODL**
  ABNORMAL OUTDISP=LEAVE

JBCFLAG3
Processing flags

- **JBC3WLM**
  WLM managed class
- **JBC3SPEC**
  Special class (STC/TSU)
- **JBC3PSEU**
  Pseudo class (Only class name and counts valid)
- **JBC3SINV**
  Default SCHENV (CATSCHED) no longer defined
- **JBC3DUOK**
  Duplicate job names OK for this job class

JBCXBM
PROCNAME for XBM II job

JBCCLASS
Job class

JBCMAXJ
Maximum executing jobs in this class in the JESPLEX

JBCCURJ
Current executing job in this class in the JESPLEX

JBCQSIZE
Jobs eligible for execution (including executing jobs)

JBCHLDCT
Jobs held in class (not including executing jobs)

JBCTSIZ1
Version 1 job class length

JBCDSCHE
Default SCHENV, Job classes only

JBCDMCLS
Default MSGCLASS, TSU and STC classes only

JBCSIZ2
Version 2 job class length

JBCJLOG
JESLOG control information

JBCLFLG
Flags

- **JBJLELIG**
  Spin eligible
- **JBJLTIMI**
  Spin on time interval
- **JBJLTIMD**
  Spin on time of day
- **JBJLLINE**
  Spin upon line delta

  - **JBJLSUP**
    Suppress
  - **JBJLNOSP**
    No spin

JBJSOURC
Source of JESLOG info

  - **JBJSEXIT**
    JESLOG from Exit
  - **JBJSJCL**
    JESLOG from JCL
  - **JBJSCAT**
    JESLOG from CAT
  - **JBJSSRR**
    JESLOG from IEFSSRR

JBCJLVAL
Spin value

JBCTSIZ3
Version 3 job class length

JBCTSIZ4
Version 4 job class length

JBCTSIZE
Job class data length

Member specific attribute prefix section (mapped by JBCLMEMD DSECT):

Field Name	Description
JBCMLEN	Length of member specific section (prefix + data)
JBCMTYPE	Type of this section (JBCLTMEM)
JBCMMOD	Modifier
JBCMFRST	First member section offset
JBCMCNT	Count of member entries
JBCMMLEN	Length of a member entry
JBCM1ST	Beginning of first member entry
JBCMSIZE	Size of fixed length prefix

Member specific attribute data section (mapped by JBCLMEME DSECT):

Field Name
Description

JBCMNAME
JES2 member name

JBCMSYS
MVS system name

JBCMFLG1
Member flags

- **JBCM1JBA**
  Jobclass active on member
- **JBC1ACT**
  Member is active
- **JBC1PXQ**
  $P XEQ issued on member
- **JBC1PJS**
  Member is draining ($P)

JBCMJMAX
Maximum jobs active

JBCMJACT
Current jobs active

JBCMESIZ
Member entry data section length

Convert Device ID Service

The Convert Device ID service translates a binary device ID into its EBCDIC device name.

See the following sections for more information on Convert Device ID Service:
- "Type of Request"
- "Use Information"
- "Issued to"
- "Related SSI Codes"
- "Related Concepts" on page 123
- "Environment" on page 123
- "Input Register Information" on page 124
- "Input Parameters" on page 124
- "Output Register Information" on page 126
- "Return Code Information" on page 126
- "Output Parameters" on page 127

Type of Request: Directed SSI Call.

Use Information: To use the JES job information services SSI, a caller must first decide the function they wish to perform. The appropriate parameter list must be obtained and pointed to by SSJIUSER.

Issued to: A JES2 subsystem (either primary or secondary). The subsystem does not have to be associated with the requesting address space.

Related SSI Codes: None.

Related Concepts: None.

Environment: The caller (issuer of the IEFSSREQ macro) must include the following mapping macros:

- CVT
- IEFJESCT

Data areas commonly referenced are mapped by the following mapping macros:

- IEFSSOBH
- IEFJSSIB
- IAZSSJI
- IAZCVDEV (Convert Device ID service)

The caller must meet the following requirements:

Caller variable	Caller value
Minimum Authorization	Problem state, any PSW key
Dispatchable unit mode	Task
AMODE	24-bit or 31-bit
Cross memory mode	PASN=HASN=SASN
ASC mode	Primary
Interrupt status	Enabled for I/O and external interrupts
Locks	No locks held
Control Parameters	The SSOB, SSIB, IAZSSJI, and IAZCVDEV control blocks can reside in 24- or 31-bit virtual storage
Recovery	The caller should provide an ESTAE-type recovery environment. See *z/OS MVS Programming: Assembler Services Guide*for more information on an ESTAE-type recovery environment

Figure 14 on page 124 shows the environment at the time of the call for SSI function code 71, Convert Device ID Service Subfunction.

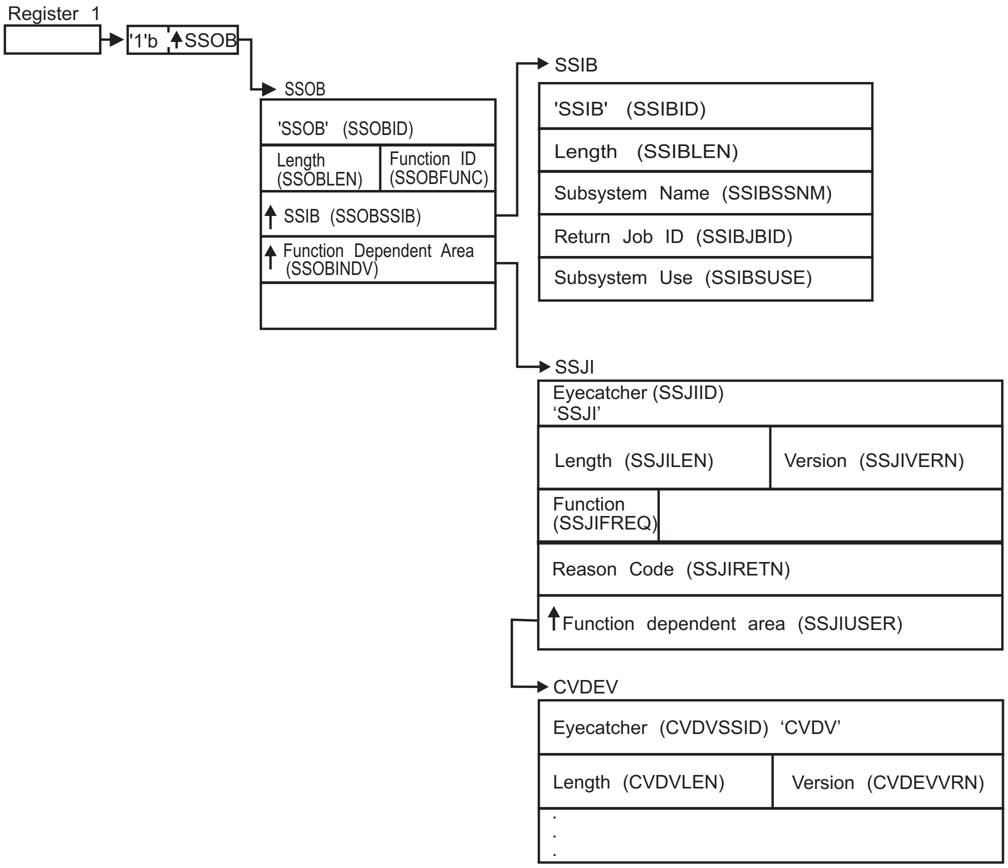
Register 1
'1'b
SSOB
SSOB
'SSOB' (SSOBID)
Length (SSOBLEN)
Function ID (SSOBFUNC)
SSIB (SSOBSSIB)
Function Dependent Area (SSOBINDV)
SSIB
'SSIB' (SSIBID)
Length (SSIBLEN)
Subsystem Name (SSIBSSNM)
Return Job ID (SSIBJBID)
Subsystem Use (SSIBSUSE)
SSJI
Eyecatcher (SSJIID) 'SSJI'
Length (SSJILEN)
Version (SSJIVERN)
Function (SSJIFREQ)
Reason Code (SSJIRETN)
Function dependent area (SSJIUSER)
CVDEV
Eyecatcher (CVDVSSID) 'CVDV'
Length (CVDVLEN)
Version (CVDEVVRN)

Figure 14. Environment at Time of Call for SSI Function Code 71, Convert Device ID Service Subfunction

Input Register Information: Before issuing the IEFSSREQ macro, the caller must ensure that the following general purpose registers contain:

Register	Contents
1	Address of a 1-word parameter list that has the high-order bit on and a pointer to the SSOB control block in the low-order 31 bits.
13	Address of a standard 18-word save area.

Input Parameters: Input parameters for the function routine are:
- SSOB
- SSIB
- IAZSSJI
- IAZCVDEV (Convert Device ID service)

SSOB Contents: The caller sets the following fields in the SSOB control block on input:

Field Name	Description
SSOBID	Identifier 'SSOB'

SSOBLEN
Length of the SSOB (SSOBHSIZ) control block

SSOBFUNC
SSI function code 71(SSOBSSJI)

SSOBSSIB
Address of the SSIB control block or zero (if this field is zero, the life-of-job SSIB is used). See “Subsystem Identification Block (SSIB)” on page 8 for more information on the life-of-job SSIB

SSOBINDV
Address of the function-dependent area (IAZSSJI control block)

Set all other fields in the SSOB control block to binary zeros before issuing the IEFSSREQ macro.

SSIB Contents: If you don't use the life-of-job SSIB, the caller must provide an SSIB and set the following fields in the SSIB control block on input:

Field Name
Description

SSIBID
Identifier 'SSIB'

SSIBLEN
Length of the SSIB (SSIBSIZE) control block

SSIBSSNM
Subsystem name — name of the subsystem to which this Job Information Services request is directed

Set all other fields in the SSIB control block to binary zeros before issuing the IEFSSREQ macro.

IAZSSJI Contents: The caller must set the following fields in the IAZSSJI control block on input:

Field Name
Description

SSJIID
Eyecatcher for the control block (set to 'SSJI')

SSJILEN
Length of the IAZSSJI (SSJISIZE) control block

SSJISVRN
Input version of the IAZSSJI control block. Set to SSJISVR# for version 1 of the control block

SSJIFREQ
Function to be performed on this request. Valid functions and their related SSJIUSER area are:

Field Value
Description

SSJICVDV
IAZCVDEV, Convert device ID service

SSJIUSER
Pointer to service specific data area (IAZCVDEV)

Set all other fields in the IAZSSJI control block to binary zeros before issuing the IEFSSREQ macro.

Convert Device ID service, IAZCVDEV contents: For the Convert device ID service (function code SSJICVDV) the caller must set the following fields in the IAZCVDEV control block on input:

Field Name	Description
CVDVSSID	Eyecatcher of the control block (set to 'CVDV')
CVDVLEN	Length of the IAZCVDEV (CVDSZE) control block
CVDEVVRN	Input version of the IAZCVDEV control block. Set to CVDVVER1 for version 1 of the cotnrol block. Set to CVDVVER# for the current (latest) version
CVDVID	Device ID in binary

Set all other fields in the IAZCVDEV control block to binary zeros before issuing the IEFSSREQ macro.

Output Register Information: When control returns to the caller, the general purpose registers contain:

Register	Contents
0	Used as a work register by the system
1	Address of the SSOB control block
2 — 13	Same as on entry to call
14	Return address
15	Return code

Return Code Information: The SSI places one of the following decimal return codes in register 15. Examine the return code to determine if the request was processed.

Return Code (Decimal)	Meaning
SSRTOK (0)	The job information services request completed. Check the SSOBRETN field for specific function information.
SSRTNSUP (4)	The subsystem specified in the SSIBSSNM field does not support the job information services function call.
SSRTNTUP (8)	The subsystem specified in the SSIBSSNM field exists but is not active.

SSRTNOSS (12)
The subsystem specified in the SSIBSSNM field is not defined to MVS.

SSRTDIST (16)
The pointer to the SSOB control block or the SSIB control block is not valid, or the function code specified in the SSOBFUNC field is greater than the maximum number of functions supported by the subsystem specified in the SSIBSSNM field.

SSRTLERR (20)
Either the SSIB control block or the SSOB control block has incorrect lengths or formats.

SSRTNSSI(24)
The SSI has not been initialized.

Output Parameters: Output parameters for the function routine are:

- SSOBRETN
- SSJIRETN
- IAZCVDEV (Convert Device ID service)

SSOBRETN Contents: When control returns to the caller and register 15 contains a zero, the job information services function places one of the following decimal values in the SSOBRETN field:

Value (Decimal)
Meaning

SSJIOK (0)
Request successful.

SSJIERVR (4)
Request completed with possible errors, see SSJIRETN for reason code.

SSJIERRU (8)
Request cannot be completed because of user error, see SSJIRETN for reason code.

SSJIERRJ (12)
Request cannot be completed, SSJIRETN contains internal reason code.

SSJIPARM (16)
The parameter list, ie, the SSJI extension is an invalid format - it is not an SSJI, the service version number is not supported, or the SSJI is not large enough.

SSJIRETN Contents: In addition to the return code in SSOBRETN, the field SSJIRETN contains the service related error or more specific information about the error. SSJIRETN will be set to one of the following decimal values:

Value (Decimal)
Meaning

SSJIUNSF (4)
Unsupported subfunction requested

SSJINTDS (24)
SSJIUSER does not point to the correct data area

SSJIUNSD (28)
SSJIUSER CB version number is not correct

SSJISMDS (32)
SSJIUSER CB lenght is too small

Return codes in SSJIRETN specific to the Convert Device ID service: The following return codes are set if the Convert Device ID service was requested and SSOBRETN is zero:

Value (Decimal)	Meaning
CVDVK (0)	Success

Convert Device ID service, IAZCVDEV contents: For the Convert Device ID service (function code SSJICVDV) the following is retunred in IAZCVDEV:

Field Name	Description
CVDVVERO	Subsystem version number (currently 1)
CVDVNAME	Convert device name in EBCDIC. If the device type is not known, then this will be set to 'UNKNOWN'
CVDVSZE	Size of IAZCVDEV

Checkpoint Version Information Service

The Checkpoint Versions information service gets or releases control to a version of the JES2 checkpoint data space.

See the following sections for more information on Checkpoint Version Information Service:

- "Type of Request"
- "Use Information"
- "Issued to"
- "Related SSI Codes"
- "Related Concepts" on page 129
- "Environment" on page 129
- "Input Register Information" on page 130
- "Input parameters" on page 130
- "Output Register Information" on page 132
- "Return Code Information" on page 132
- "Output Parameters" on page 133

Type of Request: Directed SSI Call.

Use Information: To use the JES job information services SSI, a caller must first decide the function they wish to perform. The appropriate parameter list must be obtained and pointed to by SSJIUSER.

Issued to: A JES2 subsystem (either primary or secondary). The subsystem does not have to be associated with the requesting address space.

Related SSI Codes: None.

Related Concepts: None.

Environment: The caller (issuer of the IEFSSREQ macro) must include the following mapping macros:

- CVT
- IEFJESCT

Data areas commonly referenced are mapped by the following mapping macros:

- IEFSSOBH
- IEFJSSIB
- IAZSSJI
- IAZDSERV (Checkpoint Versions Information service)

The caller must meet the following requirements:

Variable	**Value**
Minimum Authorization	Supervisor state, any PSW key
Dispatchable unit mode	Task
AMODE	24-bit or 31-bit
Cross memory mode	PASN=HASN=SASN
ASC mode	Primary
Interrupt status	Enabled for I/O and external interrupts
Locks	No locks held
Control Parameters	The SSOB, SSIB, IAZSSJI, and IAZDSERV control blocks can reside in 24- or 31-bit virtual storage
Recovery	The caller should provide an ESTAE-type recovery environment. See *z/OS MVS Programming: Assembler Services Guide*for more information on an ESTAE-type recovery environment

Figure 15 on page 130 shows the environment at the time of the call for SSI function code 71, Checkpoint Versions Subfunction.

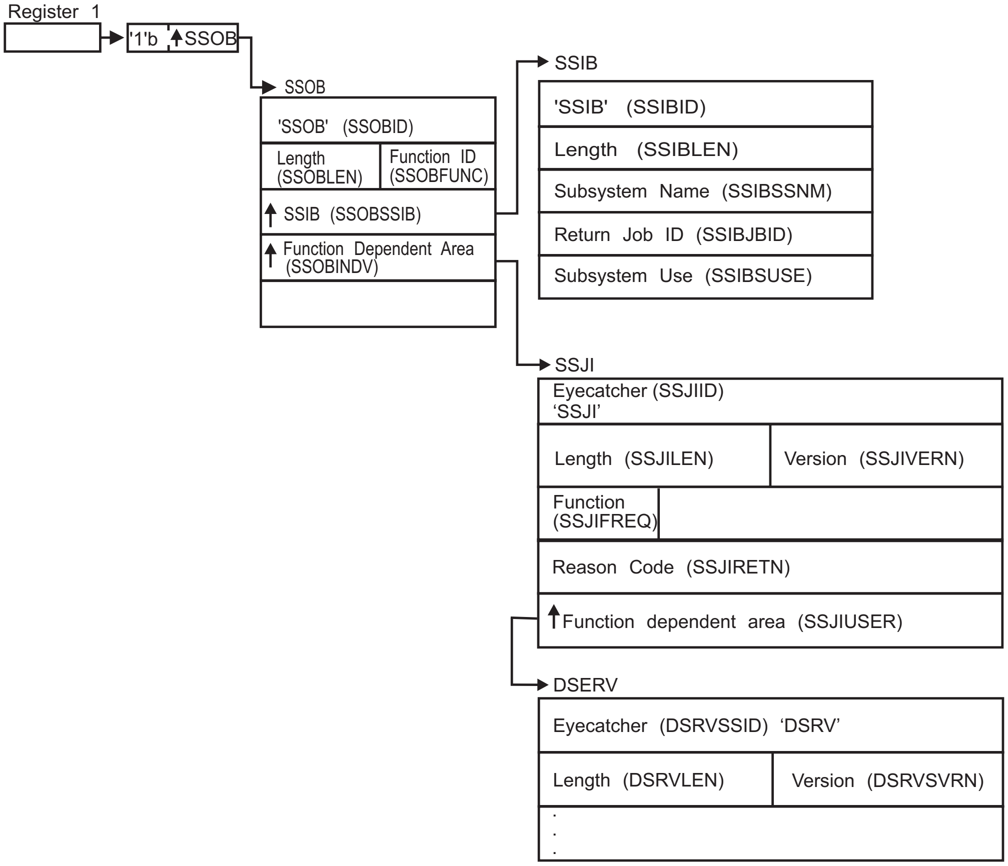
Register 1
'1'b
SSOB
SSOB
'SSOB' (SSOBID)
Length (SSOBLEN)
Function ID (SSOBFUNC)
SSIB (SSOBSSIB)
Function Dependent Area (SSOBINDV)
SSIB
'SSIB' (SSIBID)
Length (SSIBLEN)
Subsystem Name (SSIBSSNM)
Return Job ID (SSIBJBID)
Subsystem Use (SSIBSUSE)
SSJI
Eyecatcher (SSJIID) 'SSJI'
Length (SSJILEN)
Version (SSJIVERN)
Function (SSJIFREQ)
Reason Code (SSJIRETN)
Function dependent area (SSJIUSER)
DSERV
Eyecatcher (DSRVSSID) 'DSRV'
Length (DSRVLEN)
Version (DSRVSVRN)

Figure 15. Environment at Time of Call for SSI Function Code 71, Checkpoint Versions Subfunction

Input Register Information: Before issuing the IEFSSREQ macro, the caller must ensure that the following general purpose registers contain:

Register	Contents
1	Address of a 1-word parameter list that has the high-order bit on and a pointer to the SSOB control block in the low-order 31 bits.
13	Address of a standard 18-word save area.

Input parameters: Input parameters for the function routine are:

- SSOB
- SSIB
- IAZSSJI
- IAZDSERV (Checkpoint Versions Information service)

SSOB Contents: The caller sets the following fields in the SSOB control block on input:

Field Name	Description
SSOBID	Identifier 'SSOB'

SSOBLEN
Length of the SSOB (SSOBHSIZ) control block

SSOBFUNC
SSI function code 71(SSOBSSJI)

SSOBSSIB
Address of the SSIB control block or zero (if this field is zero, the life-of-job SSIB is used). See “Subsystem Identification Block (SSIB)” on page 8 for more information on the life-of-job SSIB

SSOBINDV
Address of the function-dependent area (IAZSSJI control block)

Set all other fields in the SSOB control block to binary zeros before issuing the IEFSSREQ macro.

SSIB Contents: If you don't use the life-of-job SSIB, the caller must provide an SSIB and set the following fields in the SSIB control block on input:

Field Name
Description

SSIBID
Identifier 'SSIB'

SSIBLEN
Length of the SSIB (SSIBSIZE) control block

SSIBSSNM
Subsystem name — name of the subsystem to which this Job Information Services request is directed

Set all other fields in the SSIB control block to binary zeros before issuing the IEFSSREQ macro.

IAZSSJI Contents: The caller must set the following fields in the IAZSSJI control block on input:

Field Name
Description

SSJIID
Eyecatcher for the control block (set to 'SSJI')

SSJILEN
Length of the IAZSSJI (SSJISIZE) control block

SSJISVRN
Input version of the IAZSSJI control block. Set to SSJISVR# for version 1 of the control block

SSJIFREQ
Function to be performed on this request. Valid functions and their related SSJIUSER area are:

Field Value
SSJIUSER Description

SSJIFOBT
IAZDSERV, Obtain Checkpoint versions information

SSJIFREL
IAZDSERV, Release Checkpoint versions information

SSJIUSER
Pointer to service specific data area (IAZDSERV)

Set all other fields in the IAZSSJI control block to binary zeros before issuing the IEFSSREQ macro.

Checkpoint versions information service, IAZDSERV contents: For the Checkpoint versions information service (function codes SSJIFOBT and SSJIFREL) the caller must set the following fields in the IAZDSERV control block on input to a SSJIFOBT function call:

Field Name	Description
DSRVSSID	Eyecatcher of the control block (set to 'DSRV')
DSRVLEN	Length of the IAZDSERV (DSRVSZE) control block
DSRVSVRN	Input version of the IAZDSERV control block. Set to DSRVSVR# for the current (latest) version.
DSRVFLG1	DSERV flags **DSRVF1LI** Use live version

Set all other fields in the IAZDSERV control block to binary zeros before issuing the IEFSSREQ macro.

For the Checkpoint Versions information service function codes SSJIFREL (return version), the caller should set DSRVCVPT in the IAZDSERV control block to indicate the version to be released.

Output Register Information: When control returns to the caller, the general purpose registers contain:

Register	Contents
0	Used as a work register by the system
1	Address of the SSOB control block
2 — 13	Same as on entry to call
14	Return address
15	Return code

Return Code Information: The SSI places one of the following decimal return codes in register 15. Examine the return code to determine if the request was processed.

Return Code (Decimal)
Meaning

SSRTOK (0)
The job information services request completed. Check the SSOBRETN field for specific function information.

SSRTNSUP (4)
The subsystem specified in the SSIBSSNM field does not support the job information services function call.

SSRTNTUP (8)
The subsystem specified in the SSIBSSNM field exists but is not active.

SSRTNOSS (12)
The subsystem specified in the SSIBSSNM field is not defined to MVS.

SSRTDIST (16)
The pointer to the SSOB control block or the SSIB control block is not valid, or the function code specified in the SSOBFUNC field is greater than the maximum number of functions supported by the subsystem specified in the SSIBSSNM field.

SSRTLERR (20)
Either the SSIB control block or the SSOB control block has incorrect lengths or formats.

SSRTNSSI(24)
The SSI has not been initialized.

Output Parameters: Output parameters for the function routine are:

- SSOBRETN
- SSJIRETN
- IAZDSERV (Checkpoint Versions Information service)

SSOBRETN Contents: When control returns to the caller and register 15 contains a zero, the extended status function places one of the following decimal values in the SSOBRETN field:

Value (Decimal)
Meaning

SSJIOK (0)
Request successful.

SSJIERVR (4)
Request completed with possible errors, see SSJIRETN for reason code.

SSJIERRU (8)
Request cannot be completed because of user error, see SSJIRETN for reason code.

SSJIERRJ (12)
Request cannot be completed, SSJIRETN contains internal reason code.

SSJIPARM (16)
The parameter list, ie, the SSJI extension is an invalid format - it is not an SSJI, the service version number is not supported, or the SSJI is not large enough.

SSJIRETN Contents: In addition to the return code in SSOBRETN, the field SSJIRETN contains the service related error or more specific information about the error. SSJIRETN will be set to one of the following decimal values:

When SSOBRETN is SSJIERVR (4):

Value (Decimal)
Meaning

SSJIOLDD (20)
The data may be obsolete

(136) ALESERV error

When SSOBRETN is SSJIERRU (8):

Value (Decimal)
Meaning

SSJIUNSF (4)
Unsupported subfunction requested

SSJI2OBT (8)
Successive obtains without an intervening release requested

SSJIDISA (12)
Subtask disabled, try again later

SSJIVINA (16)
Versioning inactive, activate it

SSJINTDS (24)
SSJIUSER does not point to the correct data area

SSJIUNSD (28)
SSJIUSER control block version number is not correct

SSJISMDS (32)
SSJIUSER control block length is too small

SSJIINVR (36)
Invalid input data to release. Could be successive releases without an intervening obtain or release without an intervening obtain or release without having done an obtain.

When SSOBRETN is SSJIERRJ (12):

Value (Decimal)
Meaning

(128) Data space unavailable

(132) Subtask in PJES2

(136) ALESERV error

Return codes in SSJIRETN specific to the Checkpoint versions information service: The following return codes are set if the Checkpoint versions information service was requested and SSOBRETN is zero:

Value (Decimal)
Meaning

SSJIOK (0)
Success

Checkpoint version information service, IAZDSERV contents: For the Checkpoint versions information service (function codes SSJIFOBT and SSJIFREL) the following is returned in IAZDSERV:

Field Name
Description

DSRVCVPT
Pointer to Checkpoint version

DSRVCNUM
Version number

DSRVJOTK
JOT token

- **DSRVJOPT**
  Pointer to JOT
- **DSRVJOAL**
  ALET of JOT

DSRVJQTK
JQE token

- **DSRVJQPT**
  Pointer to JQE
- **DSRVJQAL**
  ALET of JQE

DSRVQSTK
QSE token

- **DSRVQSPT**
  Pointer to QSE
- **DSRVQSAL**
  ALET of QSE

DSRVHCTK
HCT token

- **DSRVHCPT**
  Pointer to HCT
- **DSRVHCAL**
  ALET of HCT

DSRVTIME
Time stamp

DSRVSZE1
Version 1 length

DSRVJNTK
JNT token

- **DSRVJNPT**
  Pointer to JNT
- **DSRVJNAL**
  ALET of JNT

DSRVSZE2
Version 2 length

DSRVJQXK
JQX token

  - **DSRVJZPT**
    Pointer to JQX
  - **DSRVJXAL**
    ALET of JQX

DSRVJTTK
JQE trackgroup extension token

  - **DSRVJTPT**
    Pointer to JQE trackgroup extension
  - **DSRVJTAL**
    ALET of JQE trackgroup extension

DSRVDASK
DAS token

  - **DSRVDAPT**
    Pointer to DAS
  - **DSRVDAAL**
    ALET of DAS

DSRVSZE3
Version 3 length

DSRVFLG1
DSERV flags

DSRVF1LI
Use live version

DSRVJ2LV
Checkpoint level ($ACTIVATE level)

DSRVSZE4
Version 4 length

DSRVWQSK
WLM Q position token

DSRVWQST
Pointer to WQPOS

DSRVWQSL
ALET of WQPOS

DSRVSZE5
DSERV Version 5 fixed parameter length

DSRVJOXK
JOX token

DSRVOXPT
Pointer to JOX

DSRVOXAL
ALET of JOX

DSRVCNPT
Reserved for subsystem use

DSRVSZE6
DSERV Version 6 fixed parameter length

DSRVSZE
Current version length

Notify User Message Service Call — SSI Function Code 75

The Notify User Message Service Call (SSI function code 75) provides a requesting program the ability to send a message to other users who are either:

- On the same networking node
- On another node.

Type of Request

Directed SSI call.

Use Information

When a caller issues SSI function code 75 to send a message through networking facilities, the requesting program uses network job entry (NJE) services provided by MVS/JES. In an MVS environment, the TSO/E user is typically the recipient of these messages. For example, when a program reaches a particular place in its processing that the user wants to know about, the caller issues the SSI function code 75, and a message is sent to the user notifying them of this event. The text of this message is free-form.

Issued to

- The primary subsystem, either JES2 or JES3
- A secondary JES2 subsystem.

Related SSI Codes

None.

Related Concepts

None.

Environment

The caller (issuer of the IEFSSREQ macro) must include the following mapping macros:

- CVT
- IEFJESCT

Data areas commonly referenced are mapped by the following mapping macros. IBM recommends you include them in your program:

- IEFSSOBH
- IEFJSSIB
- IAZSSNU

The caller must meet the following requirements:

Caller variable	Caller value
Minimum Authorization	Problem state, any PSW key.
Dispatchable unit mode	Task
AMODE	24-bit or 31-bit
Cross memory mode	PASN=HASN=SASN
ASC mode	Primary
Interrupt status	Enabled for I/O and external interrupts
Locks	No locks held

Caller variable	**Caller value**
Control Parameters	The SSOB, SSIB, and SSNU control blocks can reside in storage above 16 megabytes.
Recovery	The caller should provide an ESTAE-type recovery environment. See *z/OS MVS Programming: Authorized Assembler Services Guide*for more information on an ESTAE-type recovery environment.

Figure 16 shows the environment at the time of the call for SSI function code 75.

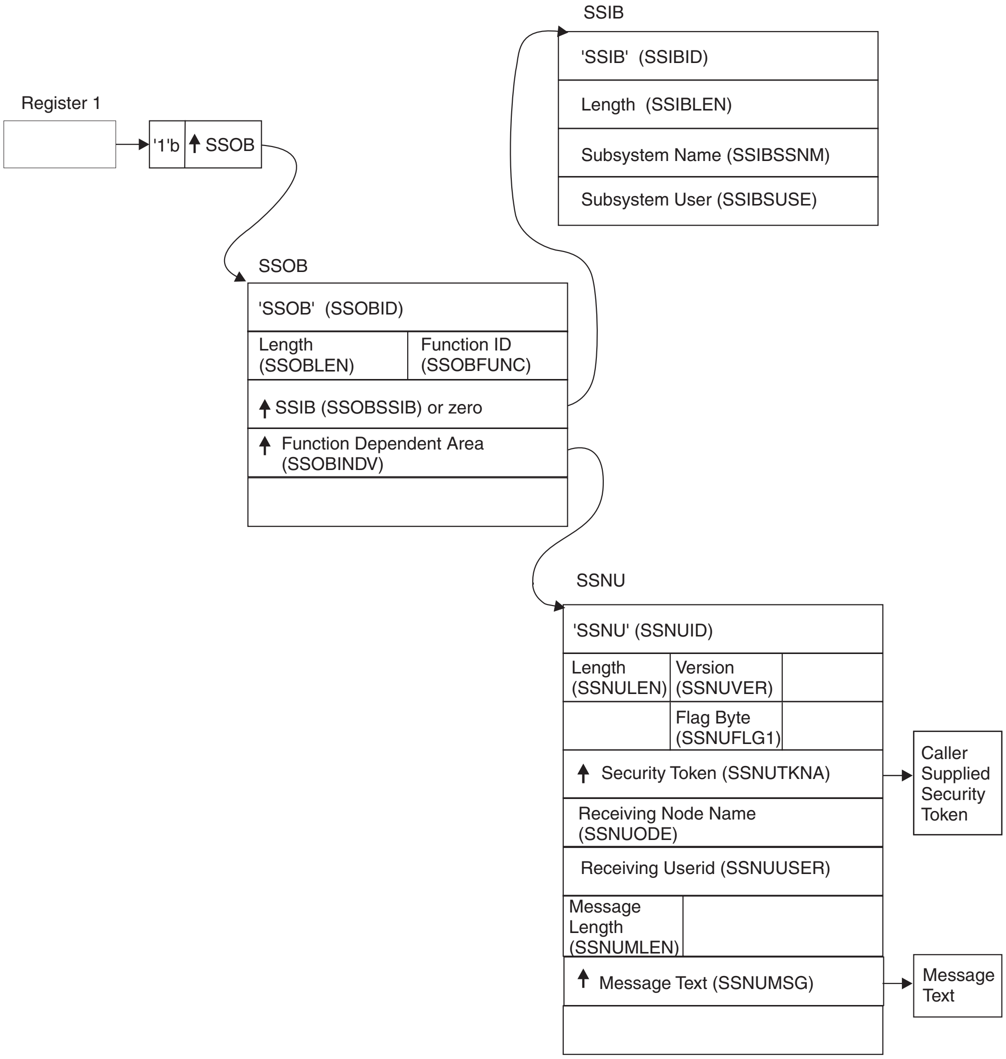
SSIB
'SSIB' (SSIBID)
Length (SSIBLEN)
Subsystem Name (SSIBSSNM)
Subsystem User (SSIBSUSE)
Register 1
'1'b
↑ SSOB
SSOB
'SSOB' (SSOBID)
Length (SSOBLEN)
Function ID (SSOBFUNC)
↑ SSIB (SSOBSSIB) or zero
↑ Function Dependent Area (SSOBINDV)
SSNU
'SSNU' (SSNUID)
Length (SSNULEN)
Version (SSNUVER)
Flag Byte (SSNUFLG1)
↑ Security Token (SSNUTKNA)
Caller Supplied Security Token
Receiving Node Name (SSNUODE)
Receiving Userid (SSNUUSER)
Message Length (SSNUMLEN)
↑ Message Text (SSNUMSG)
Message Text

Figure 16. Environment at Time of Call for SSI Function Code 75

Input Register Information

Before issuing the IEFSSREQ macro, the caller must ensure that the following general purpose registers contain:

Register
Contents

1 Address of a 1-word parameter list that has the high-order bit on and a pointer to the SSOB control block in the low-order 31 bits.

13 Address of a standard 18-word save area.

Input Parameters

Input parameters for the function routine are:

- SSOB
- SSIB
- SSNU

SSOB Contents: The caller sets the following fields in the SSOB control block on input:

Field Name	Description
SSOBID	Identifier 'SSOB'
SSOBLEN	Length of the SSOB (SSOBHSIZ) control block
SSOBFUNC	SSI function code 75 (SSOBSSNU)
SSOBSSIB	Address of the SSIB control block or zero (If this field is zero, the life-of-job SSIB is used). See “Subsystem Identification Block (SSIB)” on page 8 for more information on the life-of-job SSIB.
SSOBINDV	Address of the function dependent area (SSNU control block)

Set all other fields in the SSOB control block to binary zeros before issuing the IEFSSREQ macro.

SSIB Contents: If you don't use the life-of-job SSIB, the caller must provide an SSIB and set the following fields in the SSIB control block on input:

Field Name	Description
SSIBID	Identifier 'SSIB'
SSIBLEN	Length of the SSIB (SSIBSIZE) control block
SSIBSSNM	Subsystem name — name of the subsystem to which this Notify User Message Service call is directed. It is usually the primary JES, or in the case of JES2, a possible secondary JES. If your routine has not been initiated from such a JES, the caller must issue a Request Job ID call (SSI function code 20) prior to this Notify User Message Service call. You must use the same subsystem name in this SSIBSSNM field as you used for the Request Job ID call.
SSIBSUSE	(JES3 only) Subsystem use — the SSIBSUSE value that was returned upon completion of the Request Job ID call (SSI function code 20).

The caller must set all other fields in the SSIB control block to binary zeros before issuing the IEFSSREQ macro.

SSNU Contents: The caller sets the following fields in the SSNU control block on input:

Field Name
Description

SSNUID
Identifier 'SSNU'

SSNULEN
Length of the SSNU (SSNUSIZE) control block

SSNUVER
Version of mapping for the caller — Set this field to SSNUCVER (an IBM-defined integer constant within the SSNU control block).

SSNUFLG1
Flag Byte

- **SSNU1MLO** — logon message flag

  If SSNU1MLO is set, a message is issued only if the user is logged on.

SSNUTKNA
Associated security token of issuing user. This field is optional, and is only valid for authorized callers. For unauthorized callers, the value will be ignored and a reason code (SSNUERCD) of 40 (SSNUUNTK) will be set.

If not specified, or ignored, a security token is extracted using the caller's security environment.

If the message is not destined for the home (local) node, the security token is passed on a WRITER class RACROUTE AUTH call to validate that the user has the authority to issue messages to another NJE node.

If the message is destined for the home (local) node, the security token is passed on the SEND operator command to verify that the message can be delivered to the destination user.

SSNUNODE
Node on which messages are sent. For the home node, use the home node name or binary zeros in the SSNUNODE field. Do not use blanks (X'40') or an alias name (JES3) because they will not be treated as the home node name. If the destination is the home node, no WRITER class security checks are performed.

SSNUUSER
User ID to which messages are sent.

SSNUMLEN
Length of the message pointed to by the SSNUMSG field. The message must be no greater than 100 characters.

SSNUMSG
Address of the EBCDIC data message that is issued.

SSNUMEMB
Preferred JES2 member name to issue the SEND on if the user is logged on. If the user is not logged on, the SEND is issued locally. This field is not used by JES3 because the JES3 send is always issued from the global processor.

Set all other fields in the SSNU control block to binary zeros before issuing the IEFSSREQ macro.

Output Register Information

When control returns to the caller, the general purpose registers contain:

Register	**Contents**
0	Used as a work register by the system
1	Address of the SSOB control block
2-13	Same as on entry to call
14	Return address
15	Return code

Return Code Information

The SSI places one of the following decimal return codes in register 15. Examine the return code to determine if the request was processed.

Return Code (Decimal)
Meaning

SSRTOK (0)
The Notify User Message Service request was processed. Check the SSOBRETN field for specific function information.

SSRTNSUP (4)
The subsystem specified in the SSIBSSNM field does not support this function.

SSRTNTUP (8)
The subsystem specified in the SSIBSSNM field exists, but is not active.

SSRTNOSS (12)
The subsystem specified in the SSIBSSNM field is not defined to MVS.

SSRTDIST (16)
The pointer to the SSOB control block or the SSIB control block is not valid, or the function code specified in the SSOBFUNC field is greater than the maximum number of functions supported by the subsystem specified in the SSIBSSNM field.

SSRTLERR (20)
Either the SSIB control block or the SSOB control block has invalid lengths or formats.

SSTRNSSI(24)
The SSI has not been initialized.

Output Parameters

Output parameters for the function routine are:

- SSOBRETN
- SSNU

SSOBRETN Contents: When control returns to the caller and register 15 contains a zero, the SSOBRETN field contains one of the following decimal values:

Value (Decimal)
Meaning

SSNUOK (0)
The message was issued successfully. The SSNUERCD field contains a zero (SSNURQOK).

SSNUOKB (4)
The message was issued successfully but had a minor error. See the SSNUERCD field in the SSNU control block for the specific reason code.

SSNUERR (8)
The message was not issued. See the SSNUERCD field in the SSNU control block for the specific reason code.

SSNUNEX (12)
The value for SSOBRETN means that SSOBINDV does not point to a valid SSNU control block. For example, SSOBINDV can be zero or in JES2 the eyecatcher pointed to by SSOBINDV is not 'SSNU'.

SSNU Contents: The SSNUERCD (error code) field in the SSNU control block contains one of the following decimal values if the SSOBRETN field was set to either SSNUOKB or SSNUERR on return from the IEFSSREQ macro:

Value (Decimal)
Meaning

SSNURQOK (0)
The request was successful.

SSNUMSGT (4)
The request was successful, but the message text was truncated because it was too long.

SSNUEXC (8)
A user exit cancelled the request (JES2 only). In JES2, exit 42 may have requested the cancellation of the message.

SSNUNUSR (12)
An invalid user ID was specified (blanks or zeros).

SSNUINVD (16)
An invalid nodename was supplied. The message was not issued.

SSNUIVID (20)
An invalid identifier (SSNUID) was supplied. The message was not issued.

SSNUIVER (24)
An invalid version of the SSNU control block was supplied. The message was not issued. The value supplied in the SSNUVER field is not valid. Both JES2 and JES3 will issue this return value if SSNUVER is zero. JES3 will also issue this return value if SSNUVER is at a higher level than receiving JES can process (SSNUCVER).

SSNUNOST (28)
Storage in the processing subsystem was not available for the function. The message was not issued.

SSNUNOAU (32)
The supplied token failed an NJE WRITER class authorization call. The caller is not allowed to issue messages to the specified node. The message was not issued.

SSNUMSGE (36)
The supplied message address or length was not valid (address specified was zero). The message was not issued.

SSNUUNTK (40)
The request was successful, but the user token is not allowed for an unauthorized caller.

SSNUINVE (44)
Indicates an invalid extension (incorrect length) has been provided.

SSNUMEME (48)
An incorrect member name was specified in SSNUMEMB. The message was issued with a default member specification.

SYSOUT Application Program Interface (SAPI) — SSI Function Code 79

The SYSOUT Application Program Interface (SSI function code 79) allows JES to function as a server for applications needing to process SYSOUT data sets residing on JES spool. Use of the SAPI SSI call allows a user-supplied program to access JES SYSOUT data sets independently from the normal JES-provided functions (such as print or network). Users of this function are application programs operating in address spaces external to JES. SAPI supports multiple, concurrent requests from the applications' address spaces. Each issuer of the IEFSSREQ macro is referred to as an “application thread.”

Differences Between SSI Function Codes 1 and 79

Although both the SYSOUT Application Program Interface (SSI Function Code 79) and Process SYSOUT (SSI Function Code 1) allow applications to retrieve SYSOUT from JES spool using a variety of criteria, there are several important differences between the two function calls. IBM recommends that applications use the SAPI, as it is richer in function, as well as having better performance characteristics than the Process SYSOUT Call.

Some of the differences that SAPI provides are:

- The ability to multitask data set selection and processing calls from within an application.
- A richer selection criteria, including the use of wildcard characters for attributes.
- A greater number of SYSOUT data set characteristics returned to the application than does Process SYSOUT.
- The application has the ability to retrieve information contained in the scheduler work blocks (SWBs)
- A greater degree of modification ability of selected SYSOUT data sets.
- A count facility that Process SYSOUT does not provide.

Requesting SAPI Processing

The IAZSSS2 (SSS2) mapping macro is used as input to the IEFSSREQ request for SAPI processing. Fields in the SSS2 macro are differentiated into input, output, and disposition fields.

- An issuer's application thread sets input fields upon each IEFSSREQ invocation.
- JES manages output fields.

  JES updates the output-defined fields in response to each IEFSSREQ invocation.
- An issuer's application thread sets the disposition fields on an obtain data set request to inform JES of the disposition processing to occur for the data set returned on the prior obtain data set request.

SYSOUT Application Program Interface Request Types

An application thread can make three types of requests with SAPI. Each is independent of, and mutually exclusive with the others. Field SSS2TYPE indicates which of these three possible types of requests the application thread is issuing:

- SSS2PUGE - indicates a SAPI PUT/GET request
- SSS2COUN - indicates a SAPI COUNT request
- SSS2BULK - indicates a SAPI BULK MODIFY request

This is the function each serves:

- PUT/GET
  - Initiates data set selection, and optionally can provide disposition processing for the data set returned in the previous SAPI PUT/GET call. The SAPI PUT/GET call is described on “PUT/GET Requests” on page 146.
- COUNT
  - Returns the count of entries that can be scheduled without returning a particular data set. The SAPI COUNT call is described on “COUNT Requests” on page 150.
- BULK MODIFY
  - Modifies selected attributes of one or more data sets. The BULK MODIFY call is described on “BULK MODIFY Requests” on page 151.

General Programming Considerations — Applicable to All Calls

The following considerations apply to any of the three types of SAPI (SYSOUT application program interface) calls (PUT/GET, COUNT, and BULK MODIFY):

- Each unique SSOB/SSS2 pair supplied as input on the IEFSSREQ request is viewed as a separate thread by JES.

  You can multi-task these requests within your application's address space, or even issue multiple IEFSSREQ requests (supplying different SSOB/SSS2 pairs) from within a single task in your application's address space. A task that issues the original IEFSSREQ can transfer the SSOB/SSS2 control block pair to another task within your address space for subsequent IEFSSREQ requests. However, if this is done and the originating task (which JES considers to be the owner of that specific thread) fails, then JES cleanup occurs for resources associated with that SSOB/SSS2 pair. If the transferred task attempts to issue another IEFSSREQ with that same SSOB/SSS2 pair after such a termination occurs, incorrect processing occurs because JES has disconnected from that SSOB/SSS2 pair.

  The field SSS2JEST is the binding value that JES uses to associate a specific SSOB/SSS2 pair to its thread. The owner of a thread is the TCB that makes the **FIRST** request and receives a token in field SSS2JEST. After initially setting SSS2JEST to X'00's as part of the application thread's original initialization of the SSS2, the application thread cannot modify or refer to the SSS2JEST.
- The ‘output section’ of the SSS2 is initialized once by the application thread. The application thread does so by clearing the entire SSS2 with binary zeroes prior to initializing any input fields and then issuing the first IEFSSREQ request. Subsequently, JES manages all the output section fields. An application thread can only change the contents of this output section after an IEFSSREQ request has been made with the SSS2CTRL flag set. JES considers such a subsequent request as a new thread because as a result of the SSS2CTRL bit being set on the prior IEFSSREQ call, JES disassociates all JES-maintained resources held.
- Destination fields can include a single, maximum 8-character destination or a destination in the format of node.userid. For the latter case you must have an NJE-defined destination as the node. The fields are:

  - SSS2DEST (Destination - selection)
  - SSS2DES2 (New Destination - BULK MODIFY)
  - SSS2DDES (New Destination - Disposition Processing)
  - SSS2DESR (Returned Destination from a SAPI PUT/GET Call)
- When the selection destination field (SSS2DEST) is in the form of `A.B`, the `A` portion can **not** be an NJE-defined node other than the node on which the application is running.
- When the modification destination field (SSS2DES2 or SSS2DDES) is in the form of `A.B`, the `A` portion **can** be an NJE defined node. In this case, the SYSOUT is sent to user 'B' at node 'A'.
- Wildcards are valid for the following SSS2 selection fields:
  - SSS2CREA (Owning user ID)
  - SSS2DEST (Destination)
  - SSS2FORM (Form Numbers)
  - SSS2JBIL (Job ID)
  - SSS2JOBN (Job Name)
  - SSS2ODST (Origination Node Name)
  - SSS2PGMN (User Writer Name)
  - SSS2PRMO (Process Modes)

  Valid wildcards are `*` for multiple characters and `?` for a single character.
- Output field SSS2RET2 indicates which of the input selection fields were not used by JES in the selection of work.
- The SSI Function Code 54 call (Request Subsystem Version Information) can be used to determine the appropriate SYSOUT class to use when modifying the data set's SYSOUT class through the SAPI BULK MODIFY call.
- In the terminology of SAPI, the term 'null' refers to fields in the SSS2 that are either X'40's (EBCDIC blanks) in the case of character data, or X'00's (all zeroes) in the case of binary data.
- JES provides a minimum amount of input validity checking of an input SSS2 before a final call (SSS2CTRL) is processed. This validity checking includes:
  - Ensures a valid SSS2 eye catcher is present
  - Ensures a valid version number is present
  - Ensures a valid request type is present
  - Ensures a valid length is present
  - Ensures a valid disposition, if applicable, is present

  If any of the preceding validity check fails, the application thread is not terminated.

  If the validity check for SSS2 passes, JES will set appropriate SSOBRETN code and will terminate the thread during the final call processing (SSS2CTRL set by application).

  If the datasets within the clone JOE are not disposed of uniformly (even though application has indicated that its thread is terminating), JES2 will set SSS2CLON return code in SSOBRETN.
- Data sets available for selection are those that are available at the time the search for a data set matching the selection criteria begins. Therefore, if a data set matching the selection criteria is created while a search is in progress, it is possible that the data set will not be found during that search.
- Data sets available for selection are those that are not currently being processed.

- The use of the token returned from Extended Status (SSI 80) can result in an EOD return code (SSS2EODS) returned to the user. This can happen when the SYSOUT available at the time Extended Status was used had been processed before this call was made (SSS2RENM) or is currently being processed (SSS2RENS).

PUT/GET Requests

PUT/GET request processing occurs when an application thread issues the IEFSSREQ macro to initiate data set selection. The input SSOB and SSS2 control blocks, provided by the application thread, specifies the selection criteria used to select a data set. The application thread can use a wide variety of selection criteria to select a SYSOUT data set to be processed.

Once the application thread receives a data set from the JES, you must allocate (through a dynamic allocation with the data set name that is returned from SSS2DSN) the data set to process it. During this allocation, dynamic allocation requires DALBRTKN text unit. JES performs the initialization of this text unit. The application thread must move the address from field SSS2BTOK into a text unit pointer field for the JES-provided DALBRTKN text unit. The actual processing of the SYSOUT data set depends upon your specific application. After your application thread has completed processing of the data set, it then unallocates the data set with the text unit of DUNDDNAM specifying the DDNAME of the returned data set from the original allocation. The allocation/unallocation of the data set must occur once per returned data set.

The PUT processing occurs when the application thread subsequently issues a following IEFSSREQ macro to **select another** data set. You can use fields in the optional disposition section **of the SSS2** to change certain attributes of the **previously obtained** data set from the prior IEFSSREQ call.

A difference between SAPI and Process SYSOUT (SSI Function Code 1) during unallocation is that SAPI does not process any of the unallocation text units as occurs in Process SYSOUT. The SSS2 provides specific disposition fields for JES to use during the subsequent SAPI PUT/GET call to provide for disposition processing. From a JES processing point of view, the disposition processing for the previous data set occurs prior to the processing of the selection of the next data set, but both are occurring within the same IEFSSREQ call by the application thread.

You must provide at least SAF `UPDATE` authority for the JESSPOOL resource class to the application thread to issue the SAPI PUT/GET call correctly.

If the application does not provide for multi-tasking, it must follow the protocol below. If the application does provide for multi-tasking, each application thread in the address space must follow the protocol shown in Figure 17 on page 147.

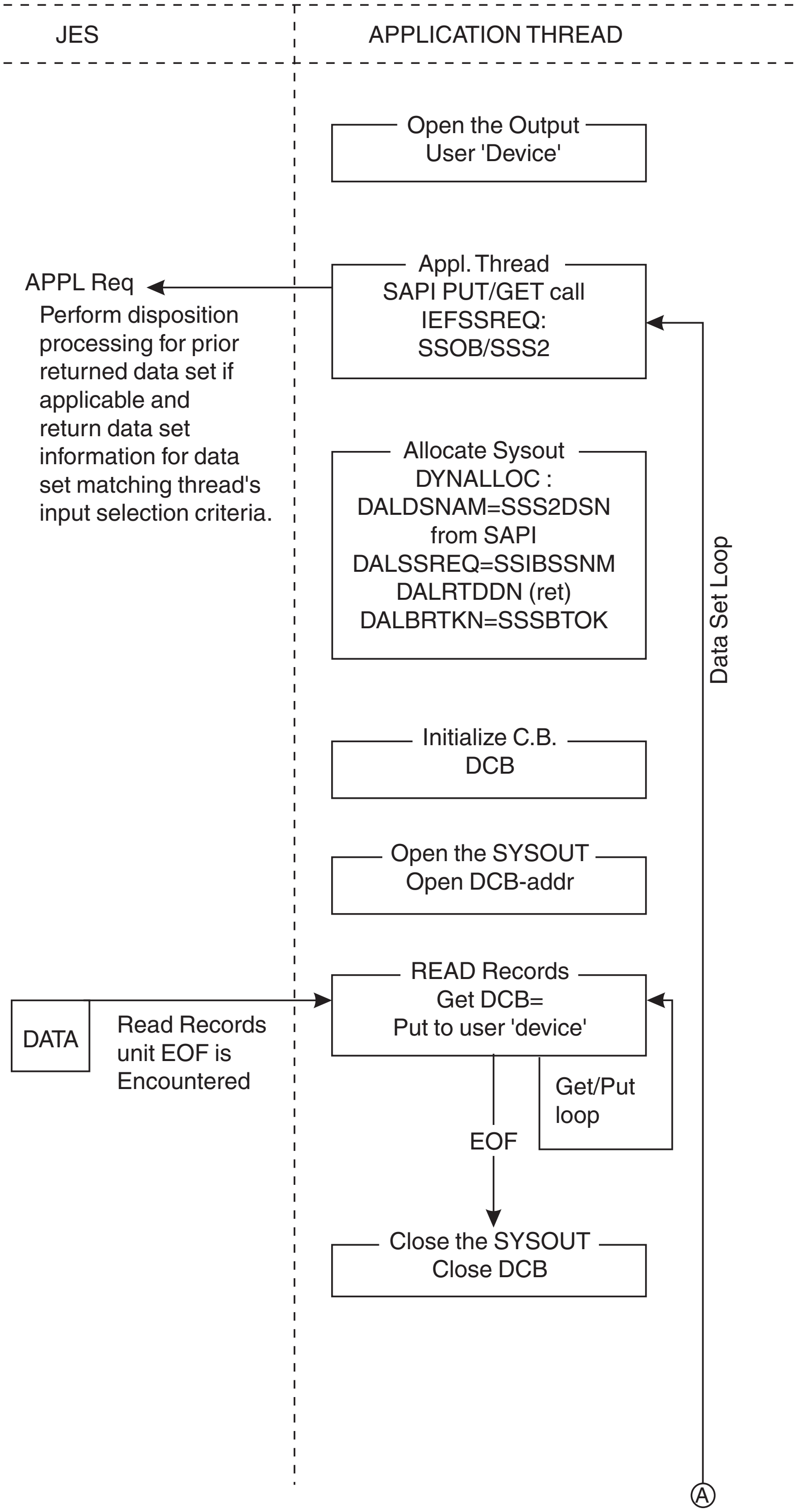
JES
APPLICATION THREAD
Open the Output
User 'Device'
APPL Req
Perform disposition processing for prior returned data set if applicable and return data set information for data set matching thread's input selection criteria.
Appl. Thread
SAPI PUT/GET call
IEFSSREQ:
SSOB/SSS2
Allocate Sysout
DYNALLOC :
DALDSNAM=SSS2DSN
from SAPI
DALSSREQ=SSIBSSNM
DALRTDDN (ret)
DALBRTKN=SSSBTOK
Data Set Loop
Initialize C.B.
DCB
Open the SYSOUT
Open DCB-addr
DATA
Read Records unit EOF is Encountered
READ Records
Get DCB=
Put to user 'device'
Get/Put loop
EOF
Close the SYSOUT
Close DCB
Ⓐ

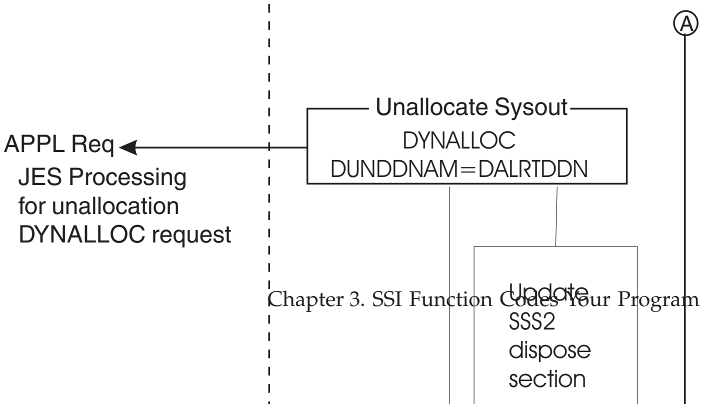
Ⓐ
Unallocate Sysout
DYNALLOC
DUNDDNAM=DALRTDDN
APPL Req
JES Processing for unallocation DYNALLOC request
Update SSS2 dispose section

Programming Considerations for PUT/GET

- The application thread must provide a pointer to an ECB in field SSS2ECBP if the application thread wants JES to post it when newly created work has characteristics matching the thread's selection criteria. This occurs after JES returns SSS2EODS for a PUT/GET request. If an ECB is not supplied, it is the responsibility of the thread to initiate an IEFSSREQ request.
- For JES3 only, once the application thread begins PUT/GET processing, a COUNT or BULK MODIFY request can not be initiated prior to receiving an SSS2EODS response to a PUT/GET request.
- SSS2CDS contains a 1 for the single returned data set in a SAPI GET/PUT call. If the data set disposition is DELETE, all copies of the data set are deleted.
- Information contained within the SYSOUT data set's scheduler work blocks (SWBs) can also be returned to the application thread. Much of the information contained within the SWB is normally not processed by JES, and therefore much more information about the data set can be retrieved from the SWB than is returned in fields of the SSS2. Examples of such information contained within the SWB are NAME, BUILDING, ADDRESS, and so on.

  The application thread needing to retrieve this SWB information, sets either SSS2FSWB or SSS2FSWT in flag byte SSS2MSC1 when issuing a PUT/GET request. The setting of SSS2FSWB implies SSS2FSWT processing as well. JES then provides the application thread the information that can be used when the application thread invokes the SJF services to retrieve this SWB information. These services are either SJFREQ REQUEST=RETRIEVE or SWBTUREQ REQUEST=RETRIEVE.

  Note that the use of either settings cause JES to perform additional processing overhead to satisfy this request. Thus, the application thread should not request the SWB information unless needed by the application. Examples of this additional overhead are spool I/O to read the stored SWBTU blocks, SJF services that JES needs to invoke to prepare the environment, additional GETMAINs needed to satisfy the request.

  If the application thread sets either SSS2FSWT or SSS2FSWB, JES returns in output field SSS2SWTU a single SWBTU that can be used as input to a subsequent SWBTUREQ REQUEST=RETRIEVE call made by the application thread. Mapping macro IEFSJTRP is used when issuing this SWBTUREQ request. Field SJTRSTUP can be set with the contents of SSS2SWTU when issuing this request. Set field SJTRSWBN with a binary 1 to indicate a single SWBTU block is being used for the SWBTUREQ call. The application thread does not need to explicitly provide storage for the SWBTU block or free it; that is JES's responsibility.

  If the application thread sets SSS2FSWB, JES returns in output field SSS2SWBT an output descriptor token that can be used as input to a subsequent SJFREQ REQUEST=RETRIEVE call made by the application thread. This is in addition to the SSS2FSWT processing previously described. Mapping macro IEFSJREP is used when issuing this SJFREQ request. Field SJRETOKN can be set with the contents of SSS2SWBT when issuing this request. The application thread does not need to explicitly provide storage for the output descriptor token, or free it; that is JES's responsibility.

  In the SSS2, reason code field SSS2WRTN contains either a value of SSS2WOK (0) or SSS2WERR (4). SSS2WOK indicates that JES processing needed for SWB retrieval was completely successful, and output fields SSS2SWBT and SSS2SWTU can be used as described above. If SSS2WRTN is set with SSS2WERR, then an error occured indicating **neither** SSS2SWTU or SSS2SWBT fields can be used. If this is the case, reason code field SSS2WRSN is set with an indicator of the type of error that prevented JES from providing the SWB information.

Note that this information provided is primarily to be used as diagnostic information, because the application thread can not affect the JES processing directly that led to the error. Accordingly, receiving such a SWB processing error does **not** affect the rest of JES processing. The data set is still able to be processed by the application thread; only the ability to issue either the SWBTUREQ or SJFREQ macro services by the application thread is affected and must not be attempted.

See *z/OS MVS Programming: Authorized Assembler Services Reference SET-WTO* for additional information concerning the use of the SJFREQ and SWBTUREQ services to retrieve the information in the SWB by either, or both, of the methods described.

- It is the responsibility of the application thread to understand the implications of disposing a data set as KEEP. Because of the potential to process the data set again, the application thread must ensure a loop condition does not arise.
- An EOD (SSOBRETN=SSS2EODS) response is a possible return only for PUT/GET processing. When SAPI returns SSS2EODS to the application thread, the application thread can do one of the following:
  - Wait on its supplied ECB for a post from JES. This post indicates SYSOUT has just been generated that contains characteristics matching the application thread's selection criteria.

    The application can then issue another IEFSSREQ to obtain this data set from the JES. Since multiple applications can be posted from the single piece of work appearing on the queue, there is no guarantee that once posted, a thread will not receive an immediate SSS2EODS return again (that is, another thread received the work).
  - Issue another IEFSSREQ request after changing its selection criteria.
  - Issue another IEFSSREQ request with the SSS2CTRL flag set indicating the application thread is terminating.
  - Issue a COUNT request.
  - Issue a BULK MODIFY request.
- The application must provide DALSSREQ (supplying the JES subsystem name (for example, `JES2` or `JESA` or `JES3`)) and a dynamic allocation text unit pointer that contains the address supplied in SSS2BTOK. In addition, your application thread must supply a text unit with DALDSNAM that uses the data set name returned in SSS2DSN.

  Note: In JES3 you can override the default number of buffers to be used when reading from the data set by specifying the text unit for BUFNO. The default is 2 spool tracks of buffers. Specifying 0 or 1 will cause the default to be used.

  The subsequent dynamic allocation call is depicted in Figure 18 on page 150.

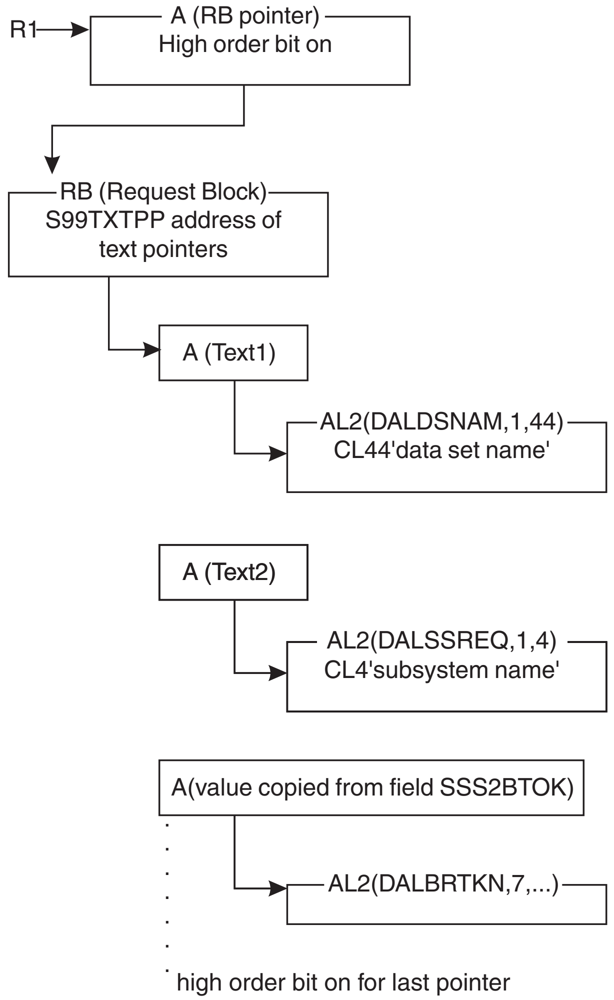
R1
A (RB pointer)
High order bit on
RB (Request Block)
S99TXTPP address of
text pointers
A (Text1)
AL2(DALDSNAM,1,44)
CL44'data set name'
A (Text2)
AL2(DALSSREQ,1,4)
CL4'subsystem name'
A(value copied from field SSS2BTOK)
AL2(DALBRTKN,7,...)
high order bit on for last pointer

Figure 18. Control Blocks of DYNALLOC Call for SAPI-Provided Data Set

COUNT Requests

JES counts the number of schedulable elements (OSEs/JOEs) matching the input selection criteria and returns the count to the application thread in field SSS2CDS. An application thread does not receive a data set in the SAPI COUNT call. Included in the information returned are the total byte count, record count, line count, and page count.

There is **no** posting of the ECB after a COUNT request has been processed by JES.

If the application does not provide for multi-tasking, it must follow the protocol shown in Figure 19 on page 151. If the application does provide for multitasking, each thread in the application address space must follow the protocol shown in Figure 19 on page 151.

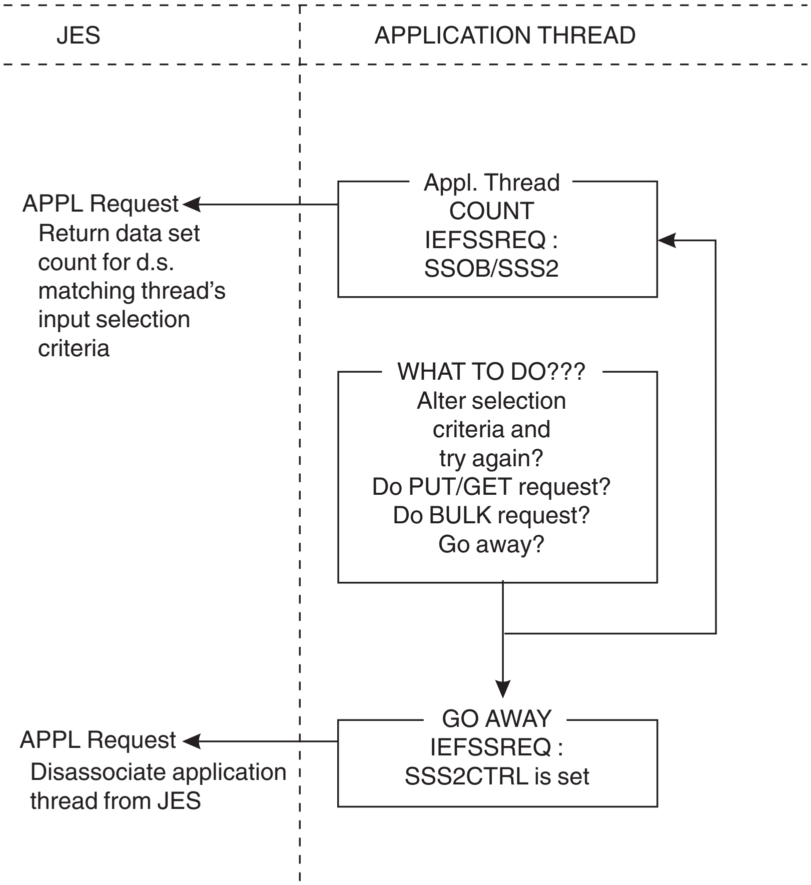
JES
APPLICATION THREAD
APPL Request
Return data set count for d.s. matching thread's input selection criteria
Appl. Thread COUNT IEFSSREQ : SSOB/SSS2
WHAT TO DO???
Alter selection criteria and try again?
Do PUT/GET request?
Do BULK request?
Go away?
APPL Request
Disassociate application thread from JES
GO AWAY IEFSSREQ : SSS2CTRL is set

Figure 19. Protocol for the SAPI COUNT Call

Programming Considerations for COUNT

- Supplying an ECB address in field SSS2ECBP does not result in the posting of the ECB by JES for a COUNT request.
- A COUNT request can be initiated after the application thread initialization is complete, immediately following a prior COUNT request, immediately following a BULK MODIFY request or immediately following receiving an EOD response to a PUT/GET request.
- After JES returns to the thread after processing the COUNT request, the thread can do one of the following:
  - Issue another IEFSSREQ request, possibly after changing its selection criteria
  - Issue another IEFSSREQ request with the SSS2CTRL flag set indicating the application thread is terminating
  - Issue a BULK MODIFY request
  - Issue a PUT/GET request

BULK MODIFY Requests

With a BULK MODIFY request, the application thread can select SYSOUT data set(s) for modifications. Modification of data sets matching the input selection criteria occurs with the setting of information in flag byte SSS2UFLG.

- **SSS2SETC** - class update
  - The class of each data set is changed to the specified class in the SSS2CLAS field.
- **SSS2DELC** - delete processing
  - Each data set is deleted.

- **SSS2ROUT** - destination update
  - The destination of each data set is changed to the specified destination in the SSS2DES2 field.
- **SSS2RLSE** - release processing
  - Each data set is moved to the WRITER queue in JES3, and marked non-held in JES2.
  - Release processing is applicable only to data sets on the JES3 Output Service HOLD queue, or for those data sets with dispositions of HOLD or LEAVE for JES2.

Processing for a BULK MODIFY request occurs for each data set matching the application thread's selection criteria. It is important to understand job boundaries can be crossed.

There is **NO** posting of the ECB after a BULK MODIFY request has been processed by JES.

In certain situations the BULK MODIFY request may not be successful. This is normal, and can occur if the output being released/returned is BUSY .There is no ECB posted and no error code returned; JES2 will always return to the caller, but the actual request may be partially or completely bypassed.

To assure that the desired changes are processed, it may be necessary to query the status of a job or specific job output, and if it appears that a request did not complete, then the BULK MODIFY request can be reissued.

You must provide at least SAF `UPDATE` authority for the JESSPOOL resource class to the application thread in order to correctly issue the SAPI BULK MODIFY call.

If the application does not provide for multi-tasking, it must follow the protocol shown in Figure 20 on page 153. If the application does provide for multi-tasking, each thread in the application address space must follow the protocol shown in Figure 20 on page 153.

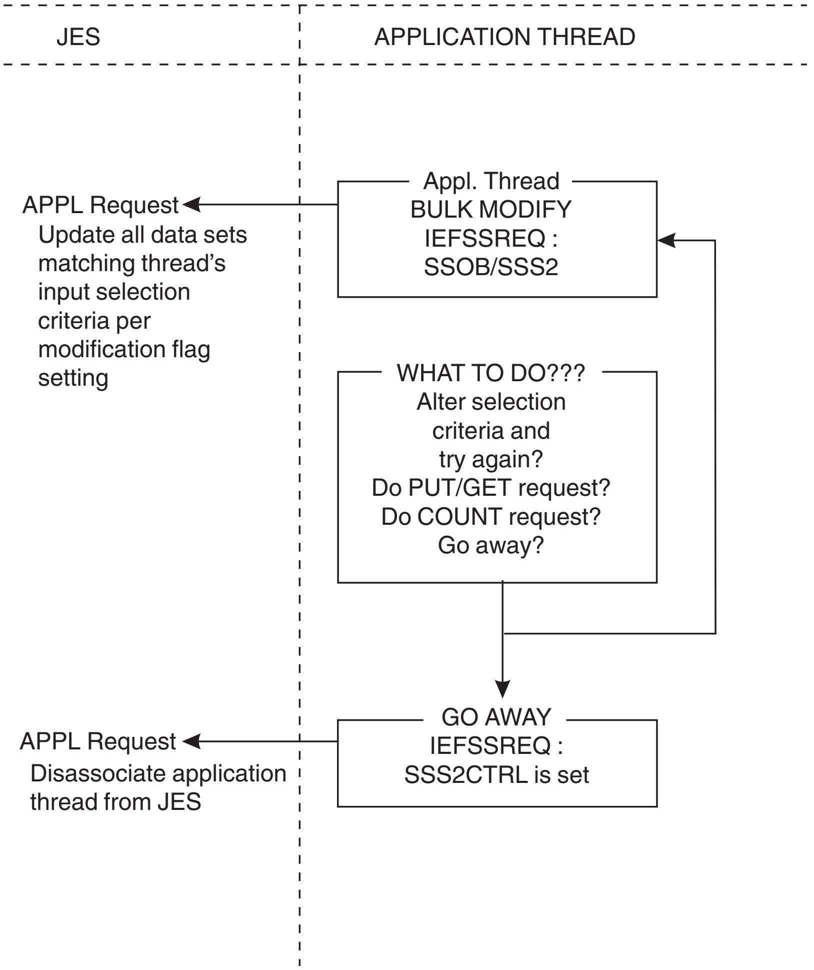
JES
APPLICATION THREAD
APPL Request
Update all data sets matching thread's input selection criteria per modification flag setting
Appl. Thread
BULK MODIFY
IEFSSREQ :
SSOB/SSS2
WHAT TO DO???
Alter selection criteria and try again?
Do PUT/GET request?
Do COUNT request?
Go away?
GO AWAY
IEFSSREQ :
SSS2CTRL is set
APPL Request
Disassociate application thread from JES

Figure 20. Protocol for the SAPI BULK MODIFY Call

Programming Considerations for BULK MODIFY

- Supplying an ECB address in field SSS2ECBP does not result in the posting of the ECB by JES for a BULK MODIFY request.
- A BULK MODIFY request can be initiated after the application thread initialization is complete, immediately following a prior BULK MODIFY request, immediately following a COUNT request or immediately following receiving an EOD response to a PUT/GET request.
- After JES returns to the application thread after processing the BULK MODIFY request, the application thread can do one of the following:
  - Issue another IEFSSREQ request, possibly after changing its selection criteria.
  - Issue another IEFSSREQ request with the SSS2CTRL flag set indicating the application thread is terminating.
  - Issue a COUNT request.
  - Issue a PUT/GET request.

Use of the Client Token

The contents of the token pointed to by field SSS2CTKN are created by JES. Using the token reduces the time to find the associated data set. Don't compare or otherwise use the tokens except on SAPI or Extended Status calls. Two different tokens obtained by different means may point to the same data set.

There are several ways to have obtained a token:

- A previous Extended Status request (see field STSTCTKN)
- As the output of a PUT/GET request (in field SSS2DSTR)
- Dynamic Allocation specified the DALRTCTK text unit.

The content of this SSS2CTKN field is used in addition to any other specified parameters. This way you can make sure the output data set still has the characteristics you would expect and have not been modified. If these characteristics are unimportant to you, specify SSS2CTKN as the only input parameter.

The CTOKEN maps the JES dependent portion of the client (SYSOUT) token (mapped by IAZCTKN). The client (SYSOUT) token has a length defined by the field, CTKNSIZE. The CTOKEN specifically maps the field, CTKNJESD, in IAZCTKN. The JES dependent portion of the client (SYSOUT) token contains the information that JES needs to uniquely identify and locate the data set represented by the client (SYSOUT) token. Also, a bit map from the CTOKEN maps the field, CTKNBMAP, in IAZCTKN. The bit map provides information as to which parts of the client (SYSOUT) token are valid for comparison between client (SYSOUT) tokens.

Keeping Processed Data Sets

SSS2RNPR on means that the JES will not return the data set to the application address space again. The application should treat this as a suggestion (not iron clad) to the JES. The data set could be seen again by the application if:

- The JES is restarted
- The application is restarted
- The operator or another application changes some characteristic.
- Selection by token is requested.

SSS2RNPT on means that the JES will not return the data set to the application thread again. A thread begins with the first receipt of a token in field SSS2JEST and ends when the thread calls JES with the SSS2CTRL flag set. Other threads will be able to obtain the data set, provided their selection criteria allow it. The application should treat this as a suggestion (not iron clad) to the JES. The data set could be seen again by the thread if:

- The JES is restarted
- The operator or another application changes some characteristic
- Selection by token is requested.

This SSS2RNPT may be useful for applications that need to hold on to a data set or group of data sets until the data is processed by the requester. It allows for building a "pipeline" of work that is directed to the same processing device or user.

Another way to use the function may be in situations where the system needs to present a list of data sets (from the same job) and keep those data sets on SPOOL for later final inspection. An end user might want to browse all data sets from a job, regardless of output characteristic groupings. If only the KEEP disposition is specified, the same data set may eventually be shown to the application again, thus creating a never ending loop.

Type of Request

Directed SSI call.

Use Information

An application thread uses SSI function code 79 to retrieve and update JES-managed SYSOUT data sets, allowing the individual application thread to select SYSOUT from JES and process it in the manner the application thread desires.

Issued to

JES2 or JES3.

Related SSI Codes

54

Related Concepts

You should know how to use:

- Dynamic allocation (DYNALLOC) services to allocate/deallocate the JES-supplied data set.
- Sequential access method (SAM) to read the allocated SYSOUT data set.
- Other standard MVS services, such as WAIT and POST logic.

Environment

Your application thread must include the following mapping macros:

- CVT
- IEFJESCT

Data areas commonly referenced are mapped by the following mapping macros. IBM recommends you include them in your program:

- IEFSSOBH
- IEFJSSIB
- IAZSSS2

Your application thread must meet the following requirements:

Caller variable	**Caller value**
Minimum Authorization	Problem state, any PSW key.
Dispatchable unit mode	Task
AMODE	31-bit
Cross memory mode	PASN=HASN=SASN
ASC mode	Primary
Interrupt status	Enabled for I/O and external interrupts
Locks	No locks held
Control Parameters	The SSOB and SSS2 control blocks can reside in storage above 16 megabytes.
Recovery	The application thread should provide an ESTAE-type recovery environment for each task. See *z/OS MVS Programming: Authorized Assembler Services Guide* for more information on an ESTAE-type recovery environment.

Figure 21 on page 156 shows the environment at the time of the call for SSI function code 79.

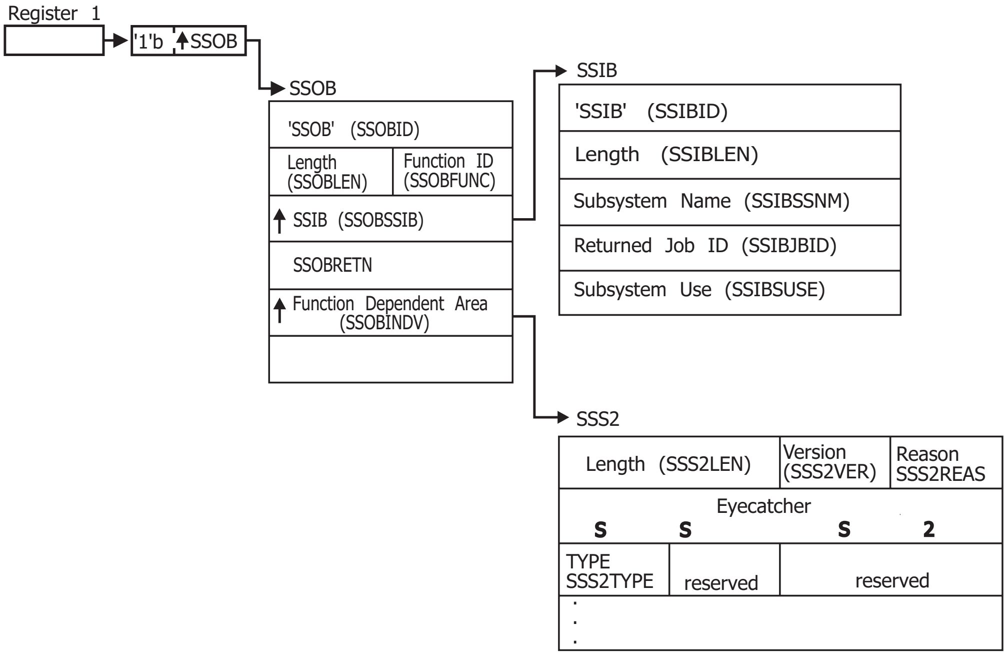
Register 1
'1'b
SSOB
SSOB
'SSOB' (SSOBID)
Length (SSOBLEN)
Function ID (SSOBFUNC)
SSIB (SSOBSSIB)
SSOBRETN
Function Dependent Area (SSOBINDV)
SSIB
'SSIB' (SSIBID)
Length (SSIBLEN)
Subsystem Name (SSIBSSNM)
Returned Job ID (SSIBJBID)
Subsystem Use (SSIBSUSE)
SSS2
Length (SSS2LEN)
Version (SSS2VER)
Reason SSS2REAS
Eyecatcher
S S S 2
TYPE SSS2TYPE
reserved
reserved

Figure 21. Environment at Time of Call for SSI Function Code 79

Input Register Information

Before issuing the IEFSSREQ macro, your application thread must ensure that the following general purpose registers contain:

Register	Contents
1	Address of a 1-word parameter list that has the high-order bit on and a pointer to the SSOB control block in the low-order 31 bits.
13	Address of a standard 18-word save area.

Input Parameters

Input parameters for the function routine are:

- SSOB
- SSIB
- SSS2

SSOB Contents: Your application thread sets the following fields in the SSOB control block on input:

Field Name	Description
SSOBID	Identifier SSOB
SSOBLEN	Length of the SSOB (SSOBHSIZ) control block
SSOBFUNC	SSI function code 79 (SSOBSOU2)

SSOBSSIB
Address of an SSIB control block or zero. (If this field is zero, the life-of-job SSIB is used.) See “Subsystem Identification Block (SSIB)” on page 8 for more about the life-of-job SSIB.

SSOBRETN
Return code from JES

SSOBINDV
Address of the function dependent area (SSS2 control block)

Your application thread must set all other fields in the SSOB control block to binary zeros before issuing the IEFSSREQ macro.

SSIB Contents: If you don't use the life-of-job SSIB, your application thread must provide an SSIB and set the following fields in the SSIB control block on input:

Field Name
Description

SSIBID
Identifier SSIB

SSIBLEN
Length of the SSIB (SSIBSIZE) control block

SSIBSSNM
Subsystem name — name of the subsystem to which this SYSOUT Application Program Interface SSI call is directed. It is usually the primary JES, or in the case of JES2, possibly a secondary JES.

If your routine has not been initiated from such a JES, your application thread must issue a Request Job ID call (SSI function code 20) prior to this SAPI call. You must use the same subsystem name in this SSIBSSNM field as you used for the Request Job ID call.

SSIBJBID
Job identifier — the job ID that was returned upon completion of the Request Job ID call (SSI function code 20).

SSIBSUSE
(JES3 only) Subsystem use — the SSIBSUSE value that was returned upon completion of the Request Job ID call (SSI function code 20).

Your application thread must set all other fields in the SSIB control block to binary zeros before issuing the IEFSSREQ macro.

SSS2 Contents: An application thread sets the following fields in the SSS2 control block on input:

Field Name
Description

SSS2LEN
Input field

The length of the SSS2, set with the value SSS2SIZE

SSS2VER
Input field

Set with the current value of SSS2CVER

SSS2EYE
Input field

Eye catcher

Set with the character string `SSS2`

SSS2TYPE
Input field

Type of call. Set with either SSS2PUGE, SSS2COUN, or SSS2BULK below.

SSS2PUGE
Request type of PUT/GET.

Find a data set matching the selection criteria.

SSS2COUN
Request type of Count.

Find the number of schedulable elements (OSEs/JOEs) matching the selection criteria and count the number of data sets and the number of lines, pages, bytes, and records in those data sets.

SAF checks are not made for the data sets.

Counts are only a snapshot at the time the JES processes the request.

SSS2BULK
Bulk modify request.

Find data sets matching the selection criteria and dispose of them as indicated in flag SSS2UFLG. No data sets are made available to the caller.

If an application uses a data set token in order to select a single data set for the bulk modify request, then the request can receive a return code of SSS2CLON. This return code (in SSOBRETN) will be given if the single data set selected by token is part of an output group containing more than one data set and requiring homogeneous processing (flag SSS2DSH is on). The function is workable only if the provided token has been returned by SAPI (SSI 79) in a field pointed to by SSS2DSTR or returned by extended status (SSI 80) in field STSTCTKN.

Input-only fields (Optional)

These fields, designated 'Optional Input-Only Fields', are used for the application to convey certain information about the particular call to the JES. Individual fields are set depending on the particular SAPI call being made at the time. Although these fields are designated 'optional', they must be set properly to effect the desired result of any particular SAPI request. For example, if the application thread needs to be posted when available work appears on the queue matching the selection criteria, then optional input field SSS2ECBP must have been set with the address of the caller-supplied ECB.

SSS2APPL
For application use.

Either leave as binary zeros or supply an EBCDIC value that can be used for display purposes should you wish to view the SSS2 if performing diagnostics. An example might be to uniquely identify a particular thread's SSS2 in a storage dump.

SSS2APL1
For application use

SSS2ECBP
Input field

Address of an ECB to be POSTed when work is available satisfying the selection criteria. The ECB is POSTed only if a prior PUT/GET request has returned with a reason code of SSS2EODS. The ECB is provided by the user.

The caller is allowed to free the memory for this ECB only after making a call with SSS2CTRL on in SSS2MSC1.

SSS2RBA
Input/Output field

Relative byte address (RBA) of first record to be read.

Only valid if bit SSS2CHKP is on.

An SSS2RBA specification, with the attendant SSS2CHKP bit, interrupts the normal processing of a group of data sets, sets the RBA for the selected data set, and suspends processing of the data sets in the group. Processing continues with the next eligible group of data sets.

A SSS2RBA specification, with the attendant SSS2CHKP bit, is intended to be used by applications to interrupt the normal processing of a group of data sets, and to defer processing to a later time or terminate the thread.

JES2 only: if SSS2RBA or SSS2CLFT is the only change specified, SSS2RNPT, SSS2RNPR, and SSS2RHLD, if specified, will be applied to the current and remaining data sets in the output group. If there are changes to other characteristics of the data set that would result in the removal of the data set from the group, the remaining data sets in the group will not be affected by SSS2RNPT, SSS2RNPR, and SSS2RHLD specifications, and thus will be eligible for re-selection.

SSS2UFLG
Input field

Specifies the modification processing to occur to the selected data sets.

SSS2UFLG is meaningful only if SSS2BULK is specified in SSS2TYPE (that is, this is a SAPI BULK MODIFY call).

SSS2SETC
Use SSS2CLAS as the new class

SSS2DELC
Delete selected data set(s)

SSS2ROUT
Use SSS2DES2 as the new data set destination

SSS2RLSE
Release selected data sets

SSS2SEL1
Input field

Used for selection of new data sets.

You can specify selection from one, two, or three queues. The order of output with respect to the writer queues and with respect to held and non-held state is not predictable.

SSS2SHLD
Select “HOLD/LEAVE” output (JES2); select “hold for TSO” output (JES3)

SSS2SXWH
Select “hold for XWTR”. In a JES2 environment, this has the same meaning as SSS2SHLD.

SSS2SHOL
Select from the hold queue. Specifying this setting guarantees that held output is returned regardless of the JES servicing this request.

SSS2SWTR
Select “WRITE/KEEP” output (JES2); select from the writer queue if JES3. If none of the three bits are set, then the request is handled as if SSS2SWTR was specified.

SSS2SAWT
Select from all the above

SSS2SCLS
Use SSS2CLSL as the class selection list

SSS2SDST
Use SSS2DEST as a filter

SSS2SJBN
Use SSS2JOBN as a filter

SSS2SDUP
Use SSS2JOBN as a filter, but give a reason code of SSS2DUPJ if duplicate jobs. This setting is meaningful only if SSS2JOBN has no wildcard characters. The setting is not used for a bulk modify (SSS2BULK) or count (SSS2COUN) request.

SSS2SDU2
Give a reason code of SSS2DUPJ if duplicate job. This setting is only meaningful if SSS2JOBN is also set.

SSS2SJBI
Use SSS2JBIL and SSS2JBIH as filters

SSS2SEL2
Input field

Used for selection of new data sets.

SSS2SPGM
Use SSS2PGMN as a filter

SSS2SFRM
Use SSS2FORM as a filter

SSS2SCRE
Use SSS2CREA as a filter

SSS2SPRM
Use SSS2PRMO as a filter

SSS2SIPA
Only select output that has an Internet Protocol (IP) address

SSS2SIPN
Only select output that has no IP address. This setting is mutually exclusive with SSS2SIPA

SSS2SFCB
Use SSS2FCB as a filter

SSS2SUCS
Use SSS2UCS as a filter

SSS2SEL3
Input field

Used for selection of new data sets.

SSS2SSTC
Select Started Tasks (STCs) (see note in SSS2STYP)

SSS2STSU
Select Time Sharing Users (TSUs) (see note in SSS2STYP)

SSS2SJOB
Select batch jobs (JOBs) (see note in SSS2STYP)

SSS2SAPC
Select APPC output (see note in SSS2STYP)

SSS2STYP
If none of these bits is on, then selection is as if **all** of the bits are on.

SSS2SEL4
Input field

Used for selection of new data sets.

SSS2SMOD
Use SSS2MOD as a filter

SSS2SFLS
Use SSS2FLSH as a filter

SSS2SAGE
Data sets selected must be at least as old as the value in SSS2AGE.

SSS2SLIN
Use minimum and maximum line counts specified in SSS2LMIN and SSS2LMAX as a data set group filter

SSS2SPAG
Use minimum and maximum page counts specified in SSS2PMIN and SSS2PMAX as a data set group filter

SSS2SPRI
Select output based on priority

SSS2SVOL
Select output based on the volume serial list in SSS2VOL (SSS2NVOL in SSS2RET2 on if the JES does not support)

SSS2SCHR
Use Printer translation tables in SSS2CHAR as a filter (SSS2NCHR in SSS2RET2 on if the JES does not support)

SSS2SEL5
Input field

Used for selection of new data sets.

SSS2SCPN
Select data set having no CPDS.

SSS2SCTK
Select by client token. Mutually exclusive with SSS2SJBI. You can use this filter as the only input or in conjunction with additional filters. If you use other filters, they must all match the SYSOUT attributes.

SSS2SBRO
Use SAPI as a "browse" facility rather than a "processing" facility.

SSS2SODS
Use SSS2ODST as a filter.

SSS2SRON
SSS2SRON indicates that this is a non-update type selection and denotes that the application intent is read-only.

If this bit is on, JES will perform READ access requests for the data sets selected and give an error return code if an attempt is made to update the status of a data set that was obtained with read access. The error will cause the current thread to be terminated.

The indicators SSS2RNPT (do not show to thread again) and SSS2RNPR (do not show to address space again) will be honored for non-update type calls.

The default SAF access for SAPI requests is UPDATE in the JESSPOOL class. Specifying SSS2SRON means that the application guarantees that no modification of the data sets will be attempted and thus READ access to the JESSPOOL class is all that is required. If the application attempts to modify the data sets in any way other than setting SSS2RNPT (do not show to thread again) or setting SSS2RNPR (do not show to this address space again), the thread will be terminated with return code of SSS2BDIS in SSOBRETN and a reason code of SSS2RRON in SSS2REAS. SSS2SRON applies to PUTGET requests only.

SSS2SENL
SSS2SENL is used with SSS2SLIN.

If this bit is on, JES2 will enforce the use of minimum and maximum line counts specified in SSS2LMIN and SSS2LMAX as a data set group filter for data sets with a line count of zero. The default logic for JES2 work selection is to ignore line limits when the data sets have a line count of zero.

SSS2SENP
SSS2SENP is used with SSS2SPAG.

If this bit is on, JES2 will enforce the use of minimum and maximum page counts specified in SSS2PMIN and SSS2PMAX as a data set group filter for data sets with a page count of zero. The default logic for JES2 work selection is to ignore page limits when the data sets have a page count of zero.

SSS2SEL6
Input field

Used for selection of new data sets.

SSS2STPN
Transaction job name filtering.

If this bit is on, SYSOUT associated with a transaction job name that matches SSS2JOBN is selected. In addition, SYSOUT that is owned by a job that matches SSS2JOBN is also returned.

The SSS2STPN bit is ignored if one of the following situations occurs:

- SSS2SJBN or SSS2SDUP is not set.
- JES2 is used but JES2 is not running with checkpoint mode z11.

SSS2STPI
Transaction ID filtering.

If this bit is on, SYSOUT associated with a transaction job id in the range specified by SSS2JBIL and SSS2JBIH are selected. In addition, SYSOUT that is owned by a job that has a job id in this range is also returned.

The SSS2STPI bit is ignored if one of the following situations occurs:

- SSS2SJBI is not set.
- JES2 is used but JES2 is not running with checkpoint mode z11.

SSS2SIG0
Ignore line and page limits if corresponding actual line and page counts for the data set are zero (if SSS2SENL and SSS2SENP are off).

SSS2MSC1

Processing flags

SSS2CTRL

On Processing complete. JES disassociates all its held resources on behalf of the calling thread.

Off Normal processing is to occur depending on the value of the SSS2TYPE field (that is, a SAPI PUT/GET, SAPI COUNT, or SAPI BULK MODIFY call).

SSS2FSWB
Return token for SJFREQ calls in field SSS2SWBT. This also means that the address of the SWBTUREQ buffer is returned in field SSS2SWTU

SSS2FSWT
Return address of SWBTUREQ buffer in field SSS2SWTU

SSS2NJEH
Return address of NJE data set and job headers if available (SSS2NJED for data set header; SSS2NJEJ for job header) (SSS2NNHD in SSS2RET2 on if the JES does not support)

SSS2JOBN
Input field

Used for selection of new data sets. Supports wildcards.

Jobname used for selection (if SSS2SJBN on)

To influence the type of job selected, use the settings in SSS2SEL3.

SSS2JBIL

Input field

Used for selection of new data sets. Low jobid used for selection (if SSS2SJBI is on).

When SSS2JBIL is 2-8 characters and starts with one of the prefixes 'J', 'JO', 'JOB', or '*', then the suffix is converted to a binary value. Job IDs with a suffix matching the SSS2JBIL suffix are returned. Embedded and trailing blanks are acceptable. The maximum length of the jobid is eight characters.

When SSS2JBIL contains 1-8 character with one or more generic characters '*' and '?', and EBCDIC characters A-Z; 0-9; or national characters @, #, $, then job IDs, as returned in SSS2JBIR, that match a 1-8 character EBCDIC comparison with SSS2JBIL are returned. A single character SSS2JBIL with '*' or '?' is not allowed. SSS2JBIH must be blank.

When SSS2STPI is set and SSS2JBIL is 2-8 characters starting with the prefix '*', then the suffix is converted to a binary value. Transaction job IDs with a suffix matching the SSS2JBIL suffix are also returned.

When SSS2STPI is set and SSS2JBIL contains 1-8 EBCDIC character A-Z; 0-9; national characters @, #, $; or generic characters '*' and '?', then transaction job IDs that match a 1-8 character EBCDIC comparison with SSS2JBIL are also returned. A single character SSS2JBIL with '*' or '? is not allowed. When generic characters are used, SSS2JBIH must be blank.

To influence the type of job selected, use the settings in SSS2SEL3.

In a JES2 environment, for STCs and TSUs, the jobid must be passed in the format of *xxxnnnnn* where *xxx* is JOB, JO, or J, or the format of *xxxnnnnn* where *xxx* is JO, J0, or J.

SSS2JBIH

Input field

Used for selection of new data sets.

High jobid used for selection (if SSS2SJBI on). This value must be null or at least as high as SSS2JBIL.

When SSS2JBIH is 2-8 characters and starts with one of the prefixes 'J', 'JO', 'JOB', then the suffix is converted to a binary value. Job IDs with a suffix within the range from the SSS2JBIL suffix through the SSS2JBIH suffix are returned. Generics characters '*' or '?' are not allowed. Embedded and trailing blanks are acceptable. The maximum length of the jobid is eight characters.

When SSS2STPI is set, EBCDIC characters A-Z; 0-9; and national characters @, #, $ are allowed. Job IDs, as returned in STTRJID, and transaction job IDs within the 1-8 character EBCDIC range from SSS2JBIL through SSS2JBIH, are returned. Generics characters '*' or '?' are not allowed.

The following table describes examples of jobs returned for SSS2JBIL when SSS2JBIH is blank. Numeric matches are in normal font, EBCDIC matches are in italicized font.

Table 3. Examples of jobs returned for SSS2JBIL when SSS2JBIH is blank

SSS2JBIL	Examples of standard job ID matches	Examples of transaction job ID matches if SSS2STPI is on
JOB00100	Numeric match(es): JOB00100 or TSU00100, and so on. EBCDIC match(es): not applicable.	Numeric match(es): not applicable. EBCDIC match(es):*JOB00100*
J100	Numeric match(es): JOB00100 or TSU00100, and so on. EBCDIC match(es): not applicable.	Numeric match(es): not applicable. EBCDIC match(es):*J100*.
A100	Numeric match(es): not applicable. EBCDIC match(es): not applicable. Error if SSS2STPI is not on.	Numeric match(es): not applicable. EBCDIC match(es):*A100*
*0000100	Numeric match(es): JOB00100 or TSU00100, and so on. EBCDIC match(es): no additional matches.	Numeric match(es): JOB00100, A0000100, Z100, ZZZZZ100, etc. EBCDIC match(es): no additional matches.
*100	Numeric match(es): JOB00100 or INT00100, and so on. EBCDIC match(es): *JOB09100*, *T9999100*, and so on.	Numeric match(es): JOB00100, A0000100, Z100, and so on. EBCDIC match(es):*JOB09100*, *T9999100*, *Z99100*, and so on.
*5555555	Numeric match(es): J5555555 or T5555555, and so on. EBCDIC match(es): no additional matches.	Numeric match(es): J5555555, A5555555, Z5555555, etc. EBCDIC match(es): *55555555*
*555555	Numeric match(es): JO555555 or ST555555 etc. EBCDIC match(es), *T9555555*, *J8555555*, and so on.	Numeric match(es):JO555555, ZZ555555, and so on. EBCDIC match(es): *Z5555555*, *55555555*, and so on.
J*	Numeric match(es): not applicable. EBCDIC match(es): *JOB00100*, *JO123456*, *J7654321*.	Numeric match(es): not applicable. EBCDIC match(es):*JOB00100*, *JO123456*, *J7654321*, *J9*, *JAMES*, and so on.
?OB00100	Numeric match(es): not applicable. EBCDIC match(es) *JOB00100*.	Numeric match(es): not applicable. EBCDIC match(es):*JOB00100*, *ZOB00100*, and so on.
?0000100	Numeric match(es): not applicable. EBCDIC match(es): not applicable.	Numeric match(es): not applicable. EBCDIC match(es):*A0000100*, *Z0000100*, and so on.
?11	Numeric match(es): not applicable. EBCDIC match(es): not applicable.	Numeric match(es): not applicable. EBCDIC match(es):*A11*, *911*, and so on.
?1?	Numeric match(es): not applicable. EBCDIC match(es): not applicable.	Numeric match(es): not applicable. EBCDIC match(es):*A1A*, *B11*, and so on.
*0001?0	Numeric match(es): not applicable. EBCDIC match(es): not applicable.	Numeric match(es): not applicable. EBCDIC match(es):*A0000110*, *Z00001A0*, *K0001J0*, *KT0001P0* and so on.
10*	Numeric match(es): not applicable. EBCDIC match(es): not applicable.	Numeric match(es): not applicable. EBCDIC match(es):*10000000*, *10A*, and so on.
ZZ#00100	Numeric match(es): not applicable. EBCDIC match(es): not applicable. Error if SSS2STPI is not on.	Numeric match(es): not applicable. EBCDIC match(es):*ZZ#00100*

SSS2CREA
Input field

Used for selection of new data sets. Supports wildcards.

Creator user ID used for selection (if SSS2SCRE on).

SSS2PRMO
Input field

One to four values used for selection of new data sets. Supports wildcards.

One to four PRMODEs used for selection (if SSS2SPRM is on).

This list must contain null entries (X'40's) for any of the elements not containing a selection parameter.

SSS2DEST
Input field

Used for selection of new data sets. Supports wildcards.

In JES2, the user ID portion of the destination can contain the generic characters “*” and “?”. This can match SYSOUT with a route code that contains a corresponding user ID routing. However, destinations of the format “R*”, “RM*”, “RMT*”, “U*”, and “N*” will not match SYSOUT with a route code of remote, special local, local, anylocal, or NJE. Also, wildcards are not supported for destinations defined by DESTID initialization statements. For more information, see the topic on Controlling JES2 Processes in *z/OS JES2 Initialization and Tuning Reference*.

Destination value used for selection (if SSS2SDST on).

SSS2DES2
Input field

Specifies the new destination of data sets selected for bulk modify requests.

New destination if SSS2ROUT is on.

SSS2PGMN
Input field

Used for selection of new data sets. Supports wildcards.

User writer name used for selection (if SSS2SPGM is on).

SSS2FORM
Input field

One to eight values used for selection of new data sets. Supports wildcards.

One to eight form numbers used for selection (if SSS2SFRM is on).

This list must contain null entries (X'40's) for any of the elements not containing a selection parameter.

SSS2CLSL
Input field

Used for selection of new data sets.

SYSOUT class list used for selection (if SSS2SCLS is on). List is terminated by X'40'.

If multiple classes are listed for the initial PUT/GET request, JES searches all data sets for the first class specified before searching for the second class specified, and so on until all classes have been searched.

For JES3 only, due to searching algorithms, it is suggested that an application thread, if using multiple SYSOUT classes in SSS2CLSL, set the value to the single, returned class (from SSS2CLAR) after a data set is returned from a SAPI PUT/GET call if the application thread wishes additional data sets of this class to be returned. This prevents JES3 from excessive queue searches. After the SSOBRETN value of SSS2EODS has been returned, the application can then re-supply SSS2CLSL with the original, multi-class list to continue to search for additional data sets on subsequent SAPI PUT/GET calls.

SSS2CLAS
Input field

Specifies the new class for data sets modified through bulk modify.

New class if SSS2SETC is on.

SSS2LMIN
Input field

Used for selection of new data sets.

The minimum number of lines (records) generated by an output group must not fall below this value if SSS2SLIN is set on, if JES2 is to consider the output group selectable. JES2 checks record limits if the data set is in line mode.

SSS2LMAX
Input field

Used for selection of new data sets.

The maximum number of lines (records) generated by an output group must not exceed this value if SSS2SLIN is on, if JES2 is to consider the output group selectable. JES2 checks record limits if the data set is in line mode.

SSS2PMIN
Input field

Used for selection of new data sets.

The minimum number of pages generated by an output group must not fall below this value if SSS2SPAG is set on , if JES2 is to consider the output group selectable. JES2 checks the page limits (SSS2PMIN and SSS2PMAX) if the data set is in page mode. If the page data set contains some line mode data, then JES2 checks both page limits and record limits (SSS2LMIN and SSS2LMAX).

SSS2PMAX
Input field

Used for selection of new data sets.

The maximum number of pages generated by an output group must not exceed this value if SSS2SPAG is set on , if JES2 is to consider the output group selectable. JES2 checks the page limits (SSS2PMIN and SSS2PMAX) if the data set is in page mode. If the page data set contains some line mode data, then JES2 checks both page limits and record limits (SSS2LMIN and SSS2LMAX).

SSS2FCB

Input field

Used for selection of new data sets.

FCB image name used for selection (if SSS2SFCB is on)

SSS2UCS

Input field

Used for selection of new data sets.

UCS image name used for selection (if SSS2SUCS is on)

SSS2CHAR

Input field

One to four values used to select new data sets (JES3 only).

One to four printer translate tables used for selection (if SSS2SCHR is on).

This list must contain null entries (X'40's) for any of the elements not containing a selection parameter.

SSS2MOD

Input field

Used for selection of new data sets.

Modify image used for selection (if SSS2SMOD is on)

SSS2FLSH

Input field

Used for selection of new data sets.

Flash cartridge ID for selection (if SSS2SFLH is on)

SSS2SECT

Input field

Used for selection of new data sets.

Address of the security token or zero. If the application thread provides the address of the token to be returned, then the application thread must set the length in the first byte of the area, and the version in the second byte of the area prior to issuing the SAPI PUT/GET call.

SSS2AGE

Input field

Used for selection of new data sets.

Minimum age of data sets to be selected (if SSS2SAGE is on). The low order bit represents 1.048576 seconds (that is, the high order word of the TOD clock).

SSS2VOL

Input field

One to four values used to select new data sets (JES2 only).

One to four SPOOL volume serial numbers. Jobs are selected if and only if the job has output on at least one of the volumes listed and SSS2SVOL is on.

This list must contain null entries (X'40's) for any of the elements not containing a selection parameter.

SSS2CTKN
Input field

Address of client token used for selection (if SSS2SCTK is on).

Mutually exclusive with SSS2SJBI.

SSS2ODST
Input field

Specifies the eight-character origination node name from which the job was submitted.

Valid only if SSS2SODS in SSS2SEL5 is on.

Input disposition fields (optional): These input disposition fields (optionally specified by the application thread) are used to determine what is to be done with the data set that was last returned to the application and that is now being disposed of. If this is the first SAPI PUT/GET call, then there is no "last" data set; therefore the following information is ignored.

Table 4 describes the SAPI disposition in SSS2 and the associated queue status options.

Table 4. SAPI Disposition in SSS2

SAPI Disposition in SSS2	PROCESSED	HOLD	RELEASE	
Field/Flag in SSS2	SSS2DKPE off	SSS2DKPE+ SSS2DHLD	SSS2DKPE+ SSS2DRLS	Queue based on resulting OUTDISP
SYSOUT OUTDISP:				
Keep	Leave	Leave	Keep	On PRINT queue
Leave	Purge	Leave	Keep	On HOLD queue
Write	Purge	Hold	Write	On PRINT queue
Hold	Purge	Hold	Write	On HOLD queue

SSS2DSP1
Input field

Flags describing the disposition for the data set whose name is currently in SSS2DSN.

Settings in SSS2DSP1 and other dispositions are honored if and only if the keep bit (SSS2DKPE) is **on**. In JES3, the absence of the keep bit implies that the data set will be deleted.

In JES2, if SSS2DKPE is **off** and the data set has OUTDISP=KEEP, the data set will have OUTDISP=LEAVE after processing. If SSS2DKPE is **off** and the data set does not have OUTDISP=KEEP, the data set is deleted regardless of other disposition settings in this section.

SSS2DKPE
Keep the data set

SSS2RHLD
Keep the data set and make it non-selectable (system hold)

SSS2RNPR
Keep the data set and leave it selectable, but never return to this SAPI address space

SSS2RNPR on means that the JES does not return the data set to the application address space again. The application must treat this as a “suggestion” to the JES. The data set could be seen again by the application if:

- The JES is restarted
- The application is restarted
- Some characteristic is changed by the operator or another application
- Selection by token is requested.

SSS2DHLD
Hold the data set

This bit is mutually exclusive with SSS2DRLS.

SSS2DRLS
Release the data set

This bit is mutually exclusive with SSS2DHLD.

SSS2CHKP
Use SSS2RBA to checkpoint the data set position. The next data set returned will have SSS2DSF on. Refer to SSS2RBA for more information.

SSS2DNWR
Set writer name to a null value (all X'40's).

SSS2RNPT
Leave the data set selectable, but never return to this SYSOUT API thread again. The data set could be seen by the thread if:

- The JES is restarted
- Some characteristic is changed by the operator to another application
- Selection by token is requested.

SSS2DSP2
Input field

Flags describing the disposition for the data set whose name is currently in SSS2DSN.

SSS2RPRI
Use the priority in SSS2DPRI.

SSS2DNFO
Set forms code to the installation default

SSS2REMV
Removes the data set from the current JOE.

Use this flag with SSS2CTK (select by client token) for a SAPI thread that will affect a single data set. Use this flag with a pair of PUT/GET calls, using SSS2CTK on the first call and CTRL on the second call. This is not restricted in the interface. Using this flag with other selection criteria can result in incorrect groupings. This specification is supported by JES2 only.

SSS2RENF
Register Data Set Notification

All ENF (event notification facility) signals are issued for the data set.

SSS2RENF is only valid for authorized callers and is ignored for unauthorized callers.

The following fields (SSS2DCLS, SSS2DFOR, SSS2DPGM, SSS2DDES, SSS2CLFT, and SSS2DPRI) are used to change a subset of the data set characteristics. These only have meaning if the data set is kept (SSS2DKPE on in SSS2DSP1).

A null value indicates that no override is desired for SSS2DCLS, SSS2DFOR, SSS2DPGM, SSS2DDES, and SSS2CLFT.

SSS2DCLS

Input field

New class.

SSS2DFOR

Input field

New forms.

SSS2DPGM

Input field

New user writer name.

SSS2DDES

Input field

New destination.

SSS2CLFT

Input field

Number of copies left to process. Values > 255 are treated as 255.

An SSS2CLFT specification interrupts the normal processing of a group of data sets, sets the copies left value for the selected data set, and suspends processing of the data sets in the group.

A SSS2CLFT specification is intended to be used by applications to interrupt the normal processing of a group of data sets, and to defer processing to a later time or terminate the thread.

JES2 only: if SSS2CLFT or SSS2RBA is the only change specified, SSS2RNPT, SSS2RNPR, and SSS2RHLD, if specified, will be applied to the current and remaining data sets in the output group. If there are changes to other characteristics of the data set that would result in the removal of the data set from the group, the remaining data sets in the group will not be affected by SSS2RNPT, SSS2RNPR, and SSS2RHLD specifications, and thus will be eligible for re-selection.

SSS2DPRI

Input field

New data set priority. A value of 0 through 255 is accepted. This field is meaningful only if SSS2RPRI is on in SSS2DSP2. This specification is supported by JES2 only.

Output Register Information

When control returns to your application, the general purpose registers contain:

Register	Contents
0	Used as a work register by the system
1	Address of the SSOB control block
2 — 13	Same as on entry to call
14	Return address
15	Return code

Return Code Information

The SSI places one of the following decimal return codes in register 15. Examine the return code to determine if the request was processed.

Return Code (Decimal)	Meaning
SSRTOK (0)	The SAPI call completed. Check the SSOBRETN field for specific function information.
SSRTNSUP (4)	The subsystem specified in the SSIBSSNM field does not support this function.
SSRTNTUP (8)	The subsystem specified in the SSIBSSNM field exists, but it is not active.
SSRTNOSS (12)	The subsystem specified in the SSIBSSNM field is not defined to MVS.
SSRTDIST (16)	The pointer to the SSOB control block or the SSIB control block is not valid, or the function code specified in the SSOBFUNC field is greater than the maximum number of functions supported by the subsystem specified in the SSIBSSNM field.
SSRTLERR (20)	Either the SSIB control block or the SSOB control block has incorrect lengths or formats.
SSRTNSSI(24)	The SSI has not been initialized.

Output Parameters

Output parameters for the function routine are SSOBRETN and SSS2.

SSOBRETN Contents: When control returns to your application thread and register 15 contains a zero, the SSOBRETN field contains one of the following decimal values:

Value (Decimal)	Meaning
SSS2RTOK (0)	Successful completion; for SAPI PUT/GET calls, a data set was returned whose name is in SSS2DSN
SSS2EODS (4)	No more data sets to select

See the reason codes defined for SSS2REAS at “Reason Codes for SSOBRETN being SSS2EODS” on page 175.

SSS2INVA (8)
Invalid search arguments

SSS2UNAV (12)
Unable to process now

SSS2DUPJ (16)
Duplicate jobnames. (This reason code can occur only if SSS2SDUP is on.) The duplicate job may or may not have characteristics matching the SSS2 filter set.

SSS2IDST (20)
Invalid destination specified

SSS2TKNM (28)
Token map failed.

Application will not be allowed to allocate to data set and DISP=(,KEEP) will be forced

SSS2LERR (32)
Logic error

See the reason codes defined for SSS2REAS at “Reason Codes for SSOBRETN being SSS2LERR.”

SSS2ICLS (36)
SSS2CLAS not A-Z and not 0-9

SSS2BDIS (40)
Disposition settings incorrect

See the reason codes defined for SSS2REAS at “Reason Codes for SSOBRETN being SSS2BDIS” on page 175.

SSS2CLON (44)
Disposition for data set group not uniform (See SSS2DSH).

DISP=(,KEEP) is forced with no override disposition information honored

SSS2 Contents: The SSS2 control block contains the following information about the data set returned from your application's request:

Reason Codes for SSOBRETN being SSS2LERR: If field SSOBRETN contains SSS2LERR, then field SSS2REAS will contain one of the following reason codes:

Value (Decimal)
Meaning

SSS2RENI (4)
SSS2JEST zero, but SSS2DSN not null

SSS2REIP (8)
SSS2SIPA and SSS2SIPN are mutually exclusive

SSS2RALO (12)
Prior data set still allocated

SSS2RDUP (16)
SSS2SDUP on in SSS2SEL1 and wildcards used in SSS2JOBN

SSS2RJBI (20)
SSS2JBIH < SSS2JBIL and SSS2SJBI on

SSS2RCRE (24)
SSS2CREA has error and SSS2SCRE on

SSS2RLEN (28)
SSS2LEN is less than SSS2SIZE

SSS2RTYP (32)
SSS2TYPE is not valid

SSS2RDES (36)
SSS2DEST has error and SSS2SDST on

SSS2RJNM (40)
SSS2JOBN has error and SSS2SJBN on

SSS2RFRM (44)
SSS2FORM has error and SSS2SFRM on

SSS2RPGM (48)
SSS2PGMN has error and SSS2SPGM on

SSS2RPRM (52)
SSS2PRMO has error and SSS2SPRM on

SSS2RCLS (56)
SSS2CLSL has error and SSS2SCLS on

SSS2RFCB (60)
SSS2FCB has error and SSS2SFCB on

SSS2RUCS (64)
SSS2UCS has error and SSS2SUCS on

SSS2RCHR (68)
SSS2CHAR has error and SSS2SCHR on

SSS2RMO (72)
SSS2MOD has error and SSS2SMOD on

SSS2RFL (76)
SSS2FLSH has error and SSS2SFLS on

SSS2RLPM (80)
SSS2LMIN or SSS2LMAX is negative and SSS2SLIN is on -- or -- SSS2PMIN or SSS2PMAX is negative and SSS2SPAG is on

SSS2RLPG (84)
SSS2LMIN > SSS2LMAX and SSS2SLIN on -- or -- SSS2PMIN > SSS2PMAX and SSS2SPAG on

SSS2RDE2 (88)
SSS2DES2 has error and SSS2TYPE is SSS2BULK and SSS2ROUT on

SSS2RVOL (92)
SSS2VOL has error and SSS2SVOL on

SSS2REYE (96)
SSS2EYE does not have `SSS2`

SSS2RCTK (100)
SSS2SCTK is on but SSS2CTKN is not specified or not valid.

SSS2RBRO (104)
SSS2SBRO is on but Bulk Modify or Count was requested.

SSS2RECJ (108)
SSS2SCTK and SSS2SJBI are mutually exclusive.

SSS2RODS (112)
SSS2ODST has error and SS2SODS on

The remainder of the reason codes up through 180 are reserved for SSS2LERR.

Reason Codes for SSOBRETN being SSS2BDIS: If field SSOBRETN contains SSS2BDIS, then field SSS2REAS will contain one of the following reason codes:

Value (Decimal)
Meaning

SSS2RDCL (184)
SSS2DCLS has error

SSS2RDFR (188)
SSS2DFOR has error

SSS2RDPG (192)
SSS2DPGM has error

SSS2RDDS (196)
SSS2DDES has error

SSS2RDHR (200)
Both SSS2DHLD and SSS2DRLS specified

SSS2RRON (204)
SSS2SRON was set (application requested READ only access), but an attempt was made to alter a characteristic of the data set or to delete the data set.

Reason codes 208 through 236 are reserved for SSS2BDIS.

Reason Codes for SSOBRETN being SSS2EODS: The following SSS2EODS reason codes are applicable only when SSS2CTKN is used as a filter:

Value (Decimal)
Meaning

SSS2RENM (240)
No matching output

SSS2RENS (244)
Matching output not selectable

Reason codes 248 through 252 are reserved for SSS2EODS.

Output-Only Fields

These fields are returned to the application thread with information managed by the JES. Once the initial SSS2 control block has been set to X'00's (or after a previous IEFSSREQ request with SSS2CTRL having been set), the application thread must not modify the contents of any of these ‘Output-Only’ fields.

SSS2REAS
Output field

Reason code associated with SSOBRETN value of SSS2LERR or SSS2BDIS. See the explanation at “Reason Codes for SSOBRETN being SSS2LERR” on page 173 and “Reason Codes for SSOBRETN being SSS2BDIS.”

SSS2JEST
Output field

JES token associated with this SAPI request. A zero value here implies that this is a new request. A new request implies that the SSS2DSN is null.

The application, once originally initializing this field to X'00's, must not modify or subsequently reference this field.

SSS2BTOK
Output field

Address of a JES initialized data area (a dynamic allocation text unit). This value must be copied to a dynamic allocation text unit pointer by the application thread prior to the dynamic allocation of the returned data set.

See “PUT/GET Requests” on page 146 for information concerning programming considerations related to the use of SSS2BTOK.

SSS2COPY
Output field

Total number of copies requested by creator. A data set is returned through this interface only once no matter how many copies were requested by the creator.

SSS2CPYG
Output field

Copy groups

SSS2JOBR
Output field

Jobname of selected job

SSS2JBIR
Output field

Job ID of selected job

SSS2OJBI
Output field

Original jobid of selected job. (Original id may be different from current jobid.) (JES3 always returns blanks.)

SSS2CRER
Output field

Creator user ID of data set selected

SSS2JDVT
Output field

JCL definition vector table

SSS2PRMR
Output field

PRMODE of data set selected

SSS2DESR
Output field

Destination of selected data set

SSS2PGMR
Output field

Writer name of selected data set

SSS2FORR
Output field

Form number of selected data set

SSS2TJN
Output field

Transaction Program Jobname that created this data set

SSS2TJID
Output field

Transaction Program Job ID that created this data set

SSS2DSN
Output field

Data set name of selected data set. Must be blanks or zeros if SSS2JEST is zero.

You must not make assumptions regarding the format of the data set name.

SSS2SEGM
Output field

Segment id (zero if data set not segmented)

SSS2WRTN
Output field

SWB processing error - return code given:

SSS2WOK (0)
Processing successful.

SSS2WERR (4)
Processing failed.

Note that reason code field SSS2WRSN is also set.

SSS2WRSN
Output field

SWB processing error - reason code set to non-zero only if SSS2WRTN is non-zero

SSS2WRSN has the following value: `SSSSCCRR` where `SSSSCCRR` is defined as:

SSSS Reason code from SJF service RR or a qualifier for a JES service error

CC Return code from SJF service RR

CC is ‘00’ if RR is 4 or 8

RR indicates the SJF service or JES service
- 4 = JES SPOOL I/O Error
- 8 = JES Memory management error
- 12 = SJFREQ REQUEST=SWBTU_MERGE

- 16 = SJFREQ REQUEST=PUTSWB
- 20 = SJFREQ REQUEST=JDTEXTRACT
- 24 = SWBTUREQ REQUEST=RETRIEVE

SSS2CLAR
Output field

SYSOUT class of selected data set

SSS2MLRL
Output field

Maximum logical record length (LRECL)

SSS2DSID
Output field

DSID for the selected data set. The value is derived from the value specified as the DSID keyword on a DD statement, which is only used for 3540 Diskette data sets.

SSS2RET1
Output field

SSS2GNVA
JES returned an output group name in SSS2OGNM (JES2 only).

SSS2DSCL
Line count, page count, byte count, and record count (SSS2LNCT, SSS2PGCT, SSS2BYCT, and SSS2RCCT) are accurate. This bit will not be on if there was an abnormal termination or the data was created on a different node.

SSS2DSF
First data set in output group

SSS2DSC
Output group being continued

SSS2DSL
Last data set in output group

SSS2IP
An Internet Protocol (IP) destination is available in the SJF data. See SSS2SWBT and SSS2SWTU.

SSS2BRST
BURST=YES specified

SSS2OPTJ
OPTCD=J specified

SSS2RET2
Output field

SSS2NCHR
Selection using printer translation tables not supported

SSS2NVOL
Selecting output based on a volume serial list not supported

SSS2NNHD
Returning addresses of NJE headers not supported

SSS2NMOD
Selecting output based on a modification is not supported

SSS2NPRI
Selecting output in priority order is not supported

SSS2NIPA
IP address selection not supported. Turned on if JES does not support and SSS2SIPA or SSS2SIPN is on

SSS2RET3
Output field

SSS2RSTC
Data set created by started task

SSS2RTSU
Data set created by time sharing user

SSS2RJOB
Data set created by batch job

SSS2RET4
Output field

SSS2CPDS
Data set has page mode data

SSS2SPUN
Data set was spun at close

SSS2SDSH
All data sets in group must be unallocated identically.

SSS2RET5
Output field Queue where the data set resides

SSS2RHLV
Data set on "HOLD/LEAVE" queue (JES2) or "Hold for TSO" queue (JES3)

SSS2RXWH
Data set on "Hold for XWTR" queue. This will never be true in a JES2 environment.

SSS2RHOL
Data set on one of the held queues.

SSS2RWTR
Data set on "Write/Keep" queue (JES2) or "Writer" queue (JES3).

SSS2RFOR
Record format

The following count fields (SSS2LNCT, SSS2PGCT, SSS2BYCT, and SSS2RCCT) are valid only if SSS2DSCL is on in SSS2RET1.

The fields represent counts for the single data set returned if SSS2TYPE is SSS2PUGE. The fields represent the total for all data sets selected if SSS2TYPE is SSS2COUN.

For a SAPI PUT/GET request, these field values are for the single returned data set. For a SAPI COUNT request, these values represent the sum of all the data sets that have been selected for the count, not taking individual copies requested of these data sets into effect.

SSS2LNCT
Output field

Line count

For a PUT/GET request, this value is for the single returned data set. For a COUNT request, this value represents the sum of all the data sets that have been selected for the count, not taking individual copies requested of these data sets into effect.

SSS2PGCT
Output field

Page count

For a PUT/GET request, this value is for the single returned data set. For a COUNT request, this value represents the sum of all the data sets that have been selected for the count, not taking individual copies requested of these data sets into effect.

SSS2BYCT
Output field

Byte count after blank truncation

For a PUT/GET request, this value is for the single returned data set. For a COUNT request, JES2 does not return this value. Meanwhile, for JES3 this value represents the sum of all the data sets that have been selected for the count, not taking individual copies requested of these data sets into effect.

SSS2RCCT
Output field

Spool record count (JES3 only)

For a PUT/GET request, this value is for the single returned data set. For a COUNT request, this value represents the sum of all the data sets that have been selected in the count, not taking individual copies of these data sets into effect.

SSS2PRCD
Output field

Procname for the step creating this data set

SSS2STPD
Output field

Stepname for the step creating this data set

SSS2DDND
Output field

DDNAME for the data set creation

SSS2SWBT
Output field

Token used for SJFREQ services. This field is filled in if flag SSS2FSWB is set.

See “PUT/GET Requests” on page 146 for programming considerations concerning the use of the SSS2SWBT field.

SSS2SWTU

Output field

Address of the SWBTU block. This field is filled in if flag SSS2FSWT or SSS2FSWB is set.

See “PUT/GET Requests” on page 146 for programming considerations concerning the use of the SSS2SWTU field.

SSS2PRIV

Input/Output field

Copied to and from SAPPRIV if JES2, COWPRIV if JES3.

SSS2CHR1

Output field

Printer translate table 1

SSS2CHR2

Output field

Printer translate table 2

SSS2CHR3

Output field

Printer translate table 3

SSS2CHR4

Output field

Printer translate table 4

SSS2OGNM

Output field

JES2 output group name

The data set returned with a given output group name will not necessarily continue to have the given output group name if this request keeps the data set.

This field is valid only if SSS2GNVA is on in SSS2RET1.

SSS2RMOD

Output field

Printer copy modify image

SSS2MODT

Output field

Printer table reference character

SSS2RFLS

Output field

Printer flash cartridge ID

SSS2FLSC

Output field

Number of flash copies

SSS2PRIO
Output field

Data set priority

SSS2LINC
Output field

Lines/page (JES2 only)

SSS2TOD
Output field

Date and time of data set availability in TOD format (that is, this value is the high order word of the TOD clock obtained through a STCK machine instruction.)

SSS2CDS
Output field

Count of work units (JOEs/OSEs) that match the selection criteria.

SSS2NJED
Output field

Address of NJE data set header. This field is non-zero if a data set header is available and the SSS2NJEH flag is on.

SSS2FCBR
Output field

Forms control buffer (FCB). Set to asterisks ('****') if the default FCB is returned.

SSS2UCSR
Output field

Universal character set (UCS). Set to asterisks ('****') if the default UCS is returned.

SSS2DSTR
Output field

Address of a token that can be used in a subsequent PUTGET call (SSS2PUGE in SSS2TYPE) to get the same data set. SSS2DSTR is filled in by JES after the token is constructed. After processing the data set, JES constructs the data set token in storage controlled by JES. JES then moves the address of the token into the field, SSS2DSTR. JES then returns the IAZSSS2 parameter list to the application. To have the token available for use on a refetch, the user must save the entire token in storage controlled by the user. When re-fetching the data set, SSS2CTKN must point to the entire saved token and SSS2SCTK bit must be turned on in flag, SSS2SEL5. Note that the token has a length defined by the field, CTKNSIZE, in IAZCTKN.

SSS2WSI
The Work Selection Identifier assigned to each SYSOUT data set (JES3 only):

- The identifier is a value assigned by JES3 based on the work selection output characteristics of a SYSOUT data set.
- For a job, SYSOUT data sets with identical work selection output characteristics are assigned the same value.

- The assigned values are unique to the job and cannot be used across jobs.
- The value of the identifier does not affect the order of returned data sets.

SSS2DSNM
Data set number (key) of the returned data set.

Job-Level Output-Only Fields

Similar to the prior 'Output-Only' section, but these fields are applicable to **all** data sets from a single job. The information contained within is on a job-level basis, not on an individual data set-level basis.

SSS2PNAM
Output field

Programmer name from the JOB statement

SSS2ROOM
Output field

Job level room number

SSS2NOTN
Output field

Job notify node

SSS2NOTU
Output field

Job notify user ID

SSS2ACCT
Output field

Address of encoded accounting information

Accounting information is provided in 'SMF' format, just as if it is in type 5 and type 30 SMF records.

AL1(number-of-pairs-that-follow)
followed by 0 or more pairs of the form:

AL1(length),CLlength'string'
A length of 0 indicates an omitted field

Example: Accounting information of `(X3600,42,,ANDY)`:

```
DC  AL1(4)             Nr of fields
DC  AL1(5),CL5'X3600'  field 1
DC  AL1(2),CL2'42'     field 2
DC  AL1(0)             field 3 (null)
DC  AL1(4),CL4'ANDY'   field 4
```

SSS2XEQ
Output field

Node where job executed

SSS2ORG
Output field

Node where job entered system

SSS2TIME
Output field

Time on input processor for the selected job. This is in hundredths of seconds since midnight.

The time field is local, not UCT/GMT.

SSS2DATE
Output field

Date on input processor for the selected job. This is in the form 0cyydddF.

The date field is local, not UCT/GMT.

SSS2SYS
Output field

System name of the MVS image where the job output was created.

This field is not available if the SYSOUT came from a network node or the job was reloaded.

SSS2MBR
Output field

Member name of the JES2 image where the job output was created.

This field is not available if the SYSOUT came from a network node or the job was reloaded.

SSS2NJEJ
Output field

Address of NJE job header. This field is non-zero if the job header is available and SSS2NJEH flag is on.

SSS2NACT
Output field

Network account number.

In JES2, this information is retrieved from the /*NETACCT JECL statement.

In JES3, this information is retrieved from the //*NETACCT JECL statement.

SSS2USID
Output field

Network account number.

Copy of JMRUSEID for the job being returned. This field should be used in SMF records associated with the printing of the job.

SSS2MXRC
Output field

Maximum RC (Return Code) for the job.

Supplied by JES2 only.

SSS2LSAB
Output field

Last ABEND code for the job.

Supplied by JES2 only.

Extended Status Function Call — SSI Function Code 80

The extended status function call (SSI function code 80) allows a user-supplied program to obtain detailed status information about jobs and SYSOUT in the JES queue. Both JES2 and JES3 subsystems support job status information.

Extended Status Request Types

The extended status interface is designed to be a general purpose interface to obtain information from JES. Callers use the STATTYPE field to indicate the type of data they require. This SSI call returns job information and SYSOUT status information. Callers can request either terse or verbose information. Terse requests return less data but have lower overhead because no I/O is required. Verbose requests return more detailed data, but involve multiple I/O requests. For this reason, verbose requests are limited in how much data can be obtained in a single SSI invocation. See “Use information for verbose requests” on page 187 for information about verbose requests.

In addition to the type of data being requested, there is a memory management call type (STATTYPE set to STATMEM). The extended status function SSI manages the storage needed to return data to the caller. Once the caller completes processing the returned data, a memory management call is required to free the data areas.

Type of Request

Directed or broadcast SSI call. It is recommended that verbose calls be directed (not broadcast) to a specific subsystem.

Use information

To use the extended status SSI, a caller must first choose the type of data to request. Job level data with or without SYSOUT level data can be requested. If only job level data is requested, one output element is created for each job. When SYSOUT data is requested, one output element is created for each job with output and one element for each piece of SYSOUT. For example, a job with four pieces of SYSOUT that matched all selection criteria would return one job level data element and four SYSOUT level data elements.

Next, the caller must decide what filters to use to select which data elements are returned. A filter is an attribute that a job or SYSOUT must possess to be returned by the interface. Filters are either at the job or SYSOUT level. Use of filters is not dependent on the type of data being requested. If only job level data is being requested and a SYSOUT filter is specified, then only jobs that have SYSOUT which passes the SYSOUT filter will be returned. Only one job level data element per matching job is returned.

A typical filter has some value associated with it, such as JOBNAME with value of TOMW. However, some filters do not have values associated with them, such as jobs that are held. If no filters are applied, the extended status function call returns information on all jobs or all SYSOUT. Because the number of jobs and SYSOUT in the system can be great, it is recommended that if information on all jobs or SYSOUT is not required, a filter be specified to limit the returned data.

All returned data will match all filters requested. If you need to limit (filter) the data based on two different values (such as a JOBNAME of PAULAK or ZOOT), you can make multiple calls to the extended status SSI before processing the results. None of the output areas set by the subsystem will be cleared until the memory management call is made. This allows a second SSI call to append its results to the results of the first call. For example, if all jobs that are owned by user ID PAULAK or ZOOT are needed, use the following series of calls:

1. Request job data with an owner filter of PAULAK
2. Request job data with an owner filter of ZOOT
3. Process all data elements returned
4. Issue memory management request to return data areas.

This is preferable to requesting information on all jobs and then selecting for processing only those data elements for jobs owned by PAULAK or ZOOT.

When information is obtained through multiple calls, it is the caller's responsibility to eliminate duplicate data. The extended status SSI makes no checks on subsequent calls to ensure information for the same job is not returned multiple times. In a JES2 environment, if the SSI is broadcast to all subsystems, JES2 suppresses replies from secondary JES2s in the same MAS as a subsystem that has already replied.

For JES2 subsystems, information returned through this SSI is obtained from a local copy of JES2's work queues. As such, it might not reflect the current state of a job or SYSOUT element. The information can be as much as a few seconds old. If your application must have the most current job status, then use some other interface (such as operator commands) to obtain the information.

For JES3 subsystems, information returned through this SSI is obtained from work queues on the JES3 global. As such, the information reflects the current status of the job or SYSOUT at the time of the request.

The order of information returned is dependent on the filters requested and the subsystem responding. The only ordering that can be assumed is that as subsystems add data to the output area, that information is added to the beginning of the output area. For example, in a series of two calls, the results from the second call will appear on the chain of output areas before the results of the first call. Similarly, if the call is broadcast to all subsystems, the output of the primary subsystem appears after the output of any secondary subsystems.

The status request does not provide a way to freeze the job and data set status in the system. Other SAPI applications, JES writers, networking writers, and operators may change the state of any job or data set received in the status response. In general, the bigger the time lag between the status request and the use of the information, the bigger the chance that either some other function may have processed the data set or that a new output may have arrived.

The response to an extended status request will include data elements for jobs and sysout which match the original request, chained from the STATJOBF or STATJOBF_64 field in IAZSSST (STAT).

There are four types of data elements (control blocks) returned, depending on the type of request made:

- SJQE - Job Queue Element (chained from IAZSSST)
- SJVE - Job Queue Verbose Element (chained from SJQE)
- SOUT - SYSOUT Element (chained from SJQE)
- SSVE - SYSOUT Verbose Element (chained from SOUT and SJQE)

Based on the input type you requested, the following table describes the output data elements that are returned.

Table 5. Summary of output data elements based on input type requested.

Input	**Output**			
STATTYPE	**SJQE**	**SJVE**	**SOUT**	**SSVE**
STATTERS	X			
STATVRBO	X	X		
STATOUTT	X		X	
STATOUTV	X	X	X	X
STATDLST			X	X

Use information for verbose requests

With version 4 of the IAZSSST macro, you can request verbose information for both jobs and SYSOUT.

Note: If you are running on JES3, the JES3 release of the global must be z/OS V1R7 or higher.

In general, verbose JOB or SYSOUT data can be obtained for a single job in three ways;

1. jobid
2. token
3. or to expand data obtained previously by a terse address (STATTRSA or STATTRSA_64, with no intervening STATMEM call).

- Obtaining verbose job level data

  Set STATTYPE to STATVRBO and also set one of the following input fields:
  - Set STATTRSA and STATTRSA_64 to zeros and ensure that the job ID filters specified by STATSJBI refer to the same job ID in STATJBIL and STATJBIH (or that STATJBIH is set to zero). Both terse and verbose job data are returned.
  - Set STATTRSA and STATTRSA_64 to zeros and STATSCTK has STATCTKN set to the SYSOUT token you want verbose data for. Both terse and verbose data are returned.
  - Set STATTRSA or STATTRSA_64 to a STATJQ or STATSE (obtained previously with no intervening memory management call). The related STATJQ will chain to a verbose element (STATVE). If the terse area is returned in 64-bit storage (STATO164 is set), use STATTRSA_64 instead of STATTRSA. For broadcast SSIs, if STATO164 is on, it is possible to have both 31-bit chained elements anchored from STATJOBF and 64-bit chained elements anchored from STATJOBF_64. In this case, the caller should set STATTRSA if the job is chained to STATJOBF, and STATTRSA_64 if the job is chained to STATJOBF_64. For directed SSIs, a test of STATO164 is adequate to determine which field to set.
- Obtaining verbose SYSOUT level data

  Set STATTYPE to STATOUTV and also set one of the following input fields:
  - Set STATTRSA and STATTRSA_64 to zero and ensure that the job ID filters specified by STATSJBI refer to the same job ID in STATJBIL and STATJBIH (or that STATJBIH is set to zero). Both terse and verbose data are returned. Verbose data is also returned for all valid SYSOUT data sets (chained into the STATJQ). If the job is still executing, STATVOs for data sets that are still open

may also be returned. Lastly, terse SYSOUT data is returned. The STATVOs are chained into the STATSEs with which they are associated.

- Set STATTRSA and STATTRSA_64 to zero and STATSCTK has STATCTKN set to the SYSOUT token of the SYSOUT group for which you want verbose data. Both terse and verbose job and SYSOUT data are returned (only for the data sets represented by the token passed).
- Set STATTRSA or STATTRSA_64 to a STATJQ (obtained previously with no intervening memory management call). Similar to the case in which STATSJBI is set, verbose job data will be chained into the STATJQ, STATVOs will be obtained for all valid SYSOUT data sets, and STATSEs will be obtained for all SYSOUT groups for the job. If the terse area is returned in 64-bit storage (STATO164 is set), use STATTRSA_64 instead of STATTRSA. For broadcast SSIs, if STATO164 is on, it is possible to have both 31-bit chained elements anchored from STATJOBF and 64-bit chained elements anchored from STATJOBF_64. In this case, the caller should set STATTRSA if the job is chained to STATJOBF, and STATTRSA_64 if the job is chained to STATJOBF_64. For directed SSIs, a test of STATO164 is adequate to determine which field to set.
- Set STATTRSA or STATTRSA_64 to a STATSE (obtained previously with no intervening memory management call). Similar to the case in which STATSCTK is set, verbose job data will be obtained for the job, and all the STATVOs related to the STATSE. If the terse area is returned in 64-bit storage (STATO164 is set), use STATTRSA_64 instead of STATTRSA. For broadcast SSIs, if STATO164 is on, it is possible to have both 31-bit chained elements anchored from STATJOBF and 64-bit chained elements anchored from STATJOBF_64. In this case, the caller should set STATTRSA if the job is chained to STATJOBF, and STATTRSA_64 if the job is chained to STATJOBF_64. For directed SSIs, a test of STATO164 is adequate to determine which field to set.

Note: Additional SYSOUT filters can be set (bits in STATSSLx) when STATTRSA or STATTRSA_64 is set to STATJQ or STATSJBI. The STATSE are built that match the SYSOUT filters and then STATVOs are built that correspond to each of the STATSEs. If the terse area is returned in 64-bit storage (STATO164 is set), use STATTRSA_64 instead of STATTRSA. For broadcast SSIs, if STATO164 is on, it is possible to have both 31-bit chained elements anchored from STATJOBF and 64-bit chained elements anchored from STATJOBF_64. In this case, the caller should set STATTRSA if the job is chained to STATJOBF, and STATTRSA_64 if the job is chained to STATJOBF_64. For directed SSIs, a test of STATO164 is adequate to determine which field to set.

Use Information for data set list requests

A list of all data sets associated with a single job can be requested by setting STATTYPE to STATDLST. Because this is considered a verbose type call (I/O is necessary to obtain the information), only information about a single job can be requested (STATTRSA and STATTRSA_64 are supported).

Note the following about STATDLST calls:

- Information on all data sets is returned including instream (SYSIN) data sets, internal data sets, data set that will not print, and data sets that might have been already processed and "deleted". You can determine the type of data set being returned by examining bits in the STVSFLG1 byte.
- One SYSOUT verbose element (STATVO) is returned per data set instance. Each STATVO will have a single SYSOUT terse section (STATSE). This includes instream (SYSIN) data sets. Data set grouping does not affect how data is

returned. If JES3 is the subsystem returning information, and the data set has not been processed by output processing, the STATSE and STATSO will be mostly null (except for the data set name, SYSOUT class, and token). This is because output processing is where JES3 resolves the various sources of output characteristics.

- SYSOUT and JOB filters can be used to limit the amount of data that is returned.
- Values for data returned will NOT always reflect attribute changes made after the data set was created (including changes made via operator command, SWB modify services, and exits).

Issued to

- A JES2 subsystem (either primary or secondary) or a JES3 subsystem for a directed request.
- The master subsystem for a broadcast request.

Related SSI Codes

None.

Related concepts

For a description of how to turn job phase codes or job delay reasons, or both, into displayable text, refer to “Text lookup service (IAZTLKUP)” on page 241.

Environment

The caller (issuer of the IEFSSREQ macro) must include the following mapping macros:

- CVT
- IEFJESCT

Data areas commonly referenced are mapped by the following mapping macros. IBM recommends you include them in your program:

- IEFSSOBH
- IEFJSSIB
- IAZSSST

The caller must meet the following requirements:

Caller variable	Caller value
Minimum Authorization	Problem state, any PSW key.
Dispatchable unit mode	Task
AMODE	24-bit or 31-bit
Cross memory mode	PASN=HASN=SASN
ASC mode	Primary
Interrupt status	Enabled for I/O and external interrupts
Locks	No locks held
Control Parameters	The SSOB, SSIB, and IAZSSST control blocks can reside above or below 16 megabytes in virtual storage.
Recovery	The caller should provide an ESTAE-type recovery environment. See *z/OS MVS Programming: Assembler Services Guide* for more information about an ESTAE-type recovery environment.

Figure 22 on page 190 shows the environment at the time of the call for SSI function code 80.

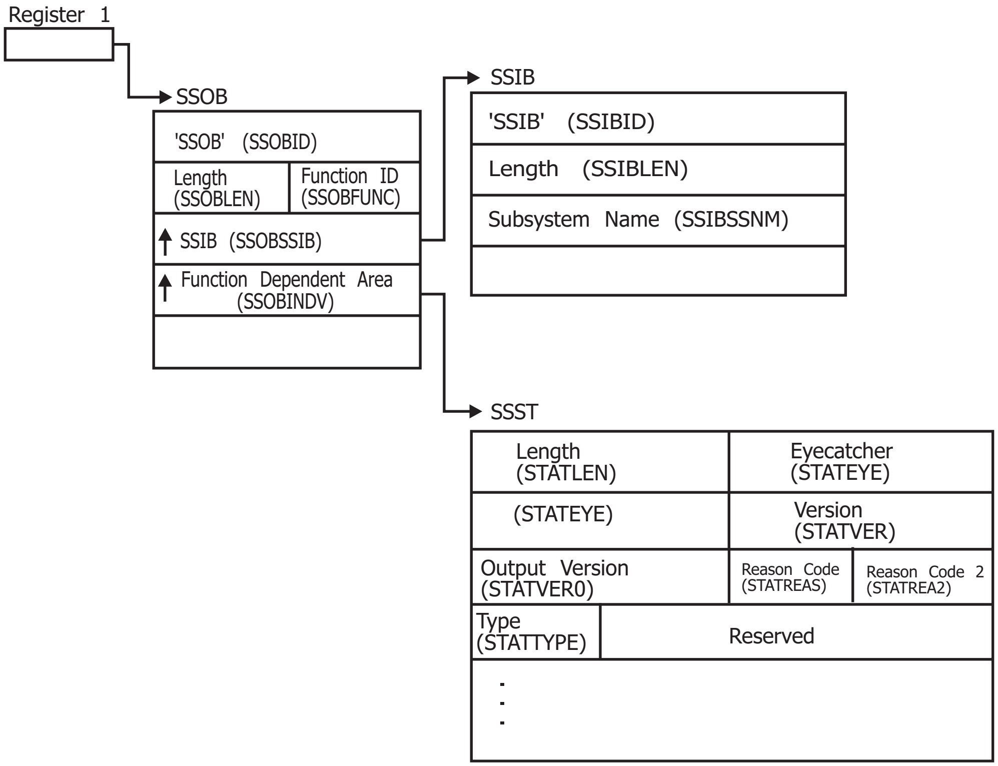
Register 1
SSOB
'SSOB' (SSOBID)
Length (SSOBLEN)
Function ID (SSOBFUNC)
SSIB (SSOBSSIB)
Function Dependent Area (SSOBINDV)
SSIB
'SSIB' (SSIBID)
Length (SSIBLEN)
Subsystem Name (SSIBSSNM)
SSST
Length (STATLEN)
Eyecatcher (STATEYE)
(STATEYE)
Version (STATVER)
Output Version (STATVER0)
Reason Code (STATREAS)
Reason Code 2 (STATREA2)
Type (STATTYPE)
Reserved

Figure 22. Environment at Time of Call for SSI Function Code 80

Input Register Information

Before issuing the IEFSSREQ macro, the caller must ensure that the following general purpose registers contain:

Register	**Contents**
1	Address of a 1-word parameter list that has the high-order bit on and a pointer to the SSOB control block in the low-order 31 bits.
13	Address of a standard 18-word save area

Input Parameters

Input parameters for the function routine are:
- SSOB
- SSIB
- IAZSSST

SSOB Contents: The caller sets the following fields in the SSOB control block on input:

Field Name	**Description**
SSOBID	Identifier ‘SSOB’
SSOBLEN	Length of the SSOB (SSOBHSIZ) control block

SSOBFUNC
SSI function code 80 (SSOBESTA)

SSOBSSIB
Address of an SSIB control block or zero (if this field is zero, the life-of-job SSIB is used). See “Subsystem Identification Block (SSIB)” on page 8 for more information on the life-of-job SSIB.

SSOBINDV
Address of the function-dependent area (IAZSSST control block).

Set all other fields in the SSOB control block to binary zeros before issuing the IEFSSREQ macro.

SSIB Contents: If you do not use the life-of-job SSIB, the caller must provide an SSIB and set the following fields in the SSIB control block on input:

Field Name
Description

SSIBID
Identifier ‘SSIB’

SSIBLEN
Length of the SSIB (SSIBSIZE) control block

SSIBSSNM
Subsystem name — name of the subsystem to which this extended status function call is directed (or MSTR if it is to be broadcast).

Set all other fields in the SSIB control block to binary zeros before issuing the IEFSSREQ macro.

IAZSSST Contents: The caller must set the following fields in the IAZSSST control block on input:

Field Name
Description

STATLEN
Length of the IAZSSST (STATSIZE) control block. For STATVER, set to STATV010 or STATV020, a length of at least STATSIZ1 or STATSIZ2 is required. For STATVER set to STATV030 or greater, a length of at least STATSIZ3 is required. STATSIZE is always equated to the largest length of the IAZSSST control block and in general should be used to obtain storage for the IAZSSST and to set STATLEN.

STATEYE
Eyecatcher for the control block (set to C'STAT')

STATVER
Input version of the IAZSSST control block (set to STATV010 for the initial version of the control block, STATV020 for OS/390 Version 2 Release 4, STATV030 for OS/390 Version 2 Release 5, STATV040 for z/OS V1R7,
| STATV050 for z/OS V1R9, STATV060 for z/OS V1R10, STATV070 or
| STATV071 for z/OS V1R11, or STATV080 for z/OS V2R1).

STATTYPE
Function to be performed on this request. Valid functions are:

Field Value
Description

STATTERS
Requests obtaining terse job level data. The data returned on this call does not require large amounts of system overhead.

STATVRBO
Requests obtaining verbose job level data. The data returned on this call includes that returned for the terse job level call. STATVER must be set to at least STATV040 for this request to be valid. The request requires system overhead for I/O to obtain the data.

STATMEM
Return memory from a previous request. After one or more requests for data, the memory obtained must be returned using this function.

STATOUTT
Requests obtaining terse SYSOUT level data (including job level information). Data returned on this call does not require large amounts of system overhead. STATVER must be set to at least STATV030 for this request to be valid.

STATOUTV
Requests obtaining verbose SYSOUT level data. The data returned on this call includes that returned for the terse SYSOUT level call. STATVER must be set to at least STATV040 for this request to be valid. The request requires system overhead for I/O to obtain the data. Terse and verbose output for running jobs is also returned.

STATDLST
Requests data set list for a job. This request obtains verbose type information for all data sets associated with a job. It includes information on SYSIN and other internal data sets. It is only valid for STATV060 and above callers.

The caller can also set the following fields in the IAZSSST control block on input to limit (or select) the jobs for which data will be returned:

STATSEL1
Flag byte which describes the filters to use to select jobs. Each bit corresponds to a filter field which must match any job returned.

Bit Name	Description
STATSCLS	Apply job class filter in STATCLSL or STATCLSP. Only one class needs to match. If only specifying one class it must be specified in STATCLSL.
STATSDST	Apply default destination filter in STATDEST or STATDSTP. Only one destination needs to match. If only specifying one destination it must be specified in STATDEST.
STATSJBN	Apply job name filter in STATJOBN or STATJBNP. Only one job name needs to match. If only specifying one job name it must be specified in STATJOBN. STATSJBN cannot be specified with STATSJIL.

STATSJBI
Apply job ID filters in STATJBIL and STATJBIH. STATSJBI cannot be specified with STATSCTK, STATSJIL or STATSCOR.

STATSOJI
Apply original job ID filter in STATOJBI. Not supported in JES3.

STATSOWN
Apply current owner filter in STATOWNR.

STATSSEC
Apply current SECLABEL filter in STATSECL.

STATSSUB
Apply submitter filter in STATSUBR (only supported by JES3).

STATSEL2
Flag byte which describes the type of jobs for which data is requested. All type bits set on (STATSTYP) **or** all bits set off select all job types.

Bit Name
Description

STATSSTC
Started tasks are selected.

STATSTSU
Time sharing users are selected.

STATSJOB
Batch jobs are selected.

STATSAPC
APPC initiators are selected. Because APPC initiators are also started tasks they are also returned if STATSSTC is specified. Use only STATSAPC to select only APPC initiators.

STATSEL3
Flag byte which describes the filters to use to select jobs. Each bit either corresponds to a filter field which must match any job returned or is a criteria for selecting jobs to return.

Bit Name
Description

STATSPRI
Apply JES job priority filter in STATPRIO.

STATSVOL
Apply SPOOL volume filters in STATVOL (this is valid only when requesting data from a JES2 subsystem).

STATSPHZ
Apply current job phase in STATPHAZ.

STATSHLD
Select jobs that are currently held. Setting both STATSHLD and STATSNHL on is the same as setting both bits off.

STATSNHL
Select jobs that are not currently held. Setting both STATSNHL and STATSHLD on is the same as setting both bits off.

STATSSYS
Only jobs active on the system listed in STATSYS are returned.

STATSMEM
Only jobs active on the JES member listed in STATMEMB are returned. (Only supported by JES2.)

STATSPOS
Include jobs queue position information for jobs awaiting execution on WLM service class queues. Setting this bit causes the fields STSCQPOS, STSCQNUM, and STSCQACT to be set if available. Calculating queue position will increase the processing overhead associated with a request. STATVER must be set to STATV020 or greater to use this filter.

Note:

1. In a JES2 environment, WLM service class queue information is always returned regardless of the setting for STATSPOS.
2. In a JES3 environment, WLM service class queue information is returned only if STATSPOS is specified.
3. Be aware that there is a performance penalty in a JES3 environment when STATSPOS is set and there is a large number of jobs in a service class queue along with a request that selects a large number of those jobs.

STATSEL4
Flag byte which describes the filters to use to select jobs. Each bit corresponds to a filter field which must match any job returned.

Bit Name
Description

STATSORG
Apply origin node filter in STATORGN. Only supported by JES2.

STATSXEQ
Apply execution node filter in STATXEQN. Only supported by JES2.

STATSSRV
Apply WLM service class filter in STATSRVC. When filtering by service class and not filtering by job number (STATSJBI) nor job phase (STATSPHZ), only jobs on the service class queue specified in STATSRVC are returned. When filtering on job number or job phase, any job assigned the service class specified in STATSRVC is returned (even if the job is not in a WLM-managed job class). Service classes are only available if the job has completed conversion processing and has not completed execution processing. This filter is only supported by JES2 subsystems. STATVER must be set to STATV020 or greater to use this filter.

STATSSEN
Apply scheduling environment filter in STATSENV.

STATSCLX
Apply job class filter in STATCLSL and STATCLSP only to jobs in STAT-SELECT or STAT-ONMAIN phases.

STATSOJD
Do not apply job name filter in STATJOBN and STATJBNP and job id filters in STATJBIL and STATJBIH to jobs that created OUTPUT with STST1APC on. STATSOJD cannot be specified with STATSJIL. (Only supported by JES2.)

STATSQPS
Always return current job position in the queue (even if a special queue scan is necessary).

STATSJIL
Use STATJBNP as a list of 8 character JES JOBIDs for which information is to be returned. The complete list is specified using STATJBNP. JOBIDs cannot be specified using STATJBIL and STATJBIH when STATSJIL is specified. STATSJIL cannot be specified with STATSJBN, STATSJBI, STATSCTK, STATSTPI, STATSTPN, STATSOJD or STATSCOR.

STATSSL1
Flag byte which describes the SYSOUT filters to use to select data to return. Each bit corresponds to a filter field which must match for data to be returned. If JOB data is requested (STATTERS) then only jobs with SYSOUT that match the specified filters are returned. If SYSOUT data is requested, then data for SYSOUT that matches these filters is returned along with the corresponding job level data. STATVER must be set to STATV030 or greater to use these filters.

Bit Name
Description

STATSCTK
Use the SYSOUT token in STATCTKN as a filter. SYSOUT tokens can be obtained from dynamic allocation or field STSTCTKN from a previous extended status request. STATSCTK cannot be specified with STATSJBI or STATSCOR.

STATSSOW
Apply the SYSOUT owner filter in STATSCRE.

STATSSDS
Apply the SYSOUT destination filter in STATSDES. STATSDSP also contains additional SYSOUT destination filters. Mutually exclusive with STATSSLC or STATSSNT.

STATSSCL
Apply the SYSOUT class filter in STATSCLA. STATSCLP also contains additional SYSOUT class filters.

STATSSWR
Apply the SYSOUT external writer filter in STATSWTR.

STATSSHL
Select SYSOUT that is currently held. This is the type of hold created by specifying HOLD=YES on the DD statement or OUTDISP=HOLD on the output card. It also includes SYSOUT that is held by an operator command or by the system due to a processing error. Setting both STATSSHL and STATSSNH on is the same as setting both bits off.

STATSSNH
Select SYSOUT that is not currently held. Setting both STATSSHL and STATSSNH on is the same as setting both bits off.

STATSSL2
Flag byte that describes the SYSOUT filters to use to select verbose data to return. If JOB data is requested (STATVRBO), then only jobs with SYSOUT that match the specified filters are returned. If SYSOUT data is requested

(STATOUTV), then data for SYSOUT that matches these filters is returned along with the corresponding job level data. STATVER must be set to STATV040 or higher and the JES processing the request must be at the z/OS V1R7 level or higher to use these filters. On JES3, the global must be at the z/OS V1R7 level or higher.

Bit name	Description
STATSSFR	Apply the SYSOUT forms name filter in STATSFOR. STATVER must be set to STATV040 or higher and the JES processing the request must be at the z/OS V1R7 level or higher to use these filters. On JES3, the global must be at the z/OS V1R7 level or higher.
STATSSPR	Apply the SYSOUT PRMODE filter in STATSPRM. STATVER must be set to STATV040 or higher and the JES processing the request must be at the z/OS V1R7 level or higher to use these filters. On JES3, the global must be at the z/OS V1R7 level or higher.
STATSSSP	Apply the Select SPIN output only filter in STATSSSP. STATVER must be set to STATV040 or higher and the JES processing the request must be at the z/OS V1R7 level or higher to use these filters. On JES3, the global must be at the z/OS V1R7 level or higher. **Note:** STATSSSP and STATSSNS are mutually exclusive. If STATSSSP and STATSSNS are both ON or both OFF, then the spin state of the output will not be considered.
STATSSNS	Apply the non-SPIN output only filter in STATSSNS. STATVER must be set to STATV040 or higher and the JES processing the request must be at the z/OS V1R7 level or higher to use these filters. On JES3, the global must be at the z/OS V1R7 level or higher. **Note:** STATSSSP and STATSSNS are mutually exclusive. If STATSSSP and STATSSNS are both ON or both OFF, then the spin state of the output will not be considered.
STATSSIP	Select SYSOUT elements that are routed to an IP address. STATVER must be set to STATV050 or higher and the JES processing the request must be at the z/OS V1R9 level or higher to use these filters.
STATSSNP	Select SYSOUT elements that are not routed to an IP address. STATVER must be set to STATV050 or higher and the JES processing the request must be at the z/OS V1R9 level or higher to use these filters.
STATSSOD	When on with STATSSOW, it indicates to match if SYSOUT is destined to STATSCRE on the local node. STATVER must be set to

STATV050 or higher and the JES processing the request must be at the z/OS V1R9 level or higher to use these filters.

STATSSJD

This is a JES2 only bit.

- If JES2 is running with checkpoint mode z2 in R11 and STATSJBN is on, it indicates to match if SYSOUT is destined to STATJOBN or STATJBNP on the local node (ignored if STATSJBN is off).
- If JES2 is running with checkpoint mode z11 in R11 and STATSJBN and STATSTPN are on, it indicates to match if SYSOUT is destined to STATJOBN, STATJBNP or transaction job name on the local node (ignored if STATSJBN is off).

STATJOBN

Job name filter (used if STATSJBN is set). The name is 1-8 characters, left justified, and padded on the right with blanks. The generic characters '*' and '?' are allowed.

STATJBIL

Low job ID value (used if STATSJBI is set). The job ID is left justified and padded on the right with blanks. When STATJBIL is 2-8 characters and starts with one of the prefixes 'J', 'JO', 'JOB', 'T', 'TS', 'TSU', 'S', 'ST', 'STC', 'I', 'IN', 'INT', or '*', then the suffix is converted to a binary value. Job IDs with a suffix matching the STATJBIL suffix are returned. The prefix character '*' is not allowed for verbose requests.

When STATJBIL contains 1-8 characters with one or more generic characters '*' and '?', and EBCDIC characters A-Z; 0-9; or national characters @, #, $, then job IDs, as returned in STTRJID, that match a 1-8 character EBCDIC comparison with STATJBIL are returned. A single character STATJBIL with '*' or '?' is not allowed. STATJBIH must be blank. Generics characters '*' or '?' are not allowed for verbose requests.

When STATSTPI is set and STATJBIL is 2-8 characters starting with the prefix '*', then the suffix is converted to a binary value. Transaction job IDs with a suffix matching the STATJBIL suffix are also returned.

When STATSTPI is set and STATJBIL contains 1-8 EBCDIC characters A-Z; 0-9; national characters @, #, $; or generic characters '*' and '?', then transaction job IDs, as returned in STSAJID, that match a 1-8 character EBCDIC comparison with STATJBIL are also returned. A single character STATJBIL with '*' or '? is not allowed. When generic characters are used, STATJBIH must be blank.

Note: INT and IN are valid only in JES3.

STATJBIH

High job ID value (used if STATSJBI is set). If this field is not specified, then information is only returned using the filter specified in STATJBIL. When STATJBIH is 2-8 characters and starts with one of the prefixes 'J', 'JO', 'JOB', 'T', 'TS', 'TSU', 'S', 'ST', 'STC', 'I', 'IN', or 'INT', then the suffix is converted to a binary value. Job IDs with a suffix within the range from the STATJBIL suffix through the STATJBIH suffix are returned. Generics characters '*' or '?' are not allowed.

When STATSTPI is set, EBCDIC characters A-Z; 0-9; and national characters @, #, $ are allowed. Job IDs, as returned in STTRJID, and transaction job IDs, as returned in STSAJID, within the 1-8 character EBCDIC range from STATJBIL through STATJBIH, are returned. Generics characters '*' or '?' are not allowed.

Note: INT and IN are valid only in JES3.

The following table describes examples of jobs returned for STATJBIL when STATJBIH is blank. Numeric matches are in normal font, EBCDIC matches are in italicized font.

Table 6. Examples of jobs returned for STATJBIL when STATJBIH is blank.

STATJBIL	**Examples of standard job ID matches**	**Examples of transaction job ID matches if STATSTPI is on**
JOB00100	Numeric match(es): JOB00100 or TSU00100, and so on. EBCDIC match(es): not applicable.	Numeric match(es): not applicable. EBCDIC match(es):*JOB00100*
J100	Numeric match(es): JOB00100 or TSU00100, and so on. EBCDIC match(es): not applicable.	Numeric match(es): not applicable. EBCDIC match(es):*J100*.
A100	Numeric match(es): not applicable. EBCDIC match(es): not applicable. Error if STATSTPI is not on.	Numeric match(es): not applicable. EBCDIC match(es):*A100*
*0000100	Numeric match(es): JOB00100 or TSU00100, and so on. EBCDIC match(es): no additional matches.	Numeric match(es): JOB00100, A0000100, Z100, ZZZZZ100, and so on. EBCDIC match(es): no additional matches.
*100	Numeric match(es): JOB00100 or INT00100, and so on. EBCDIC match(es): *JOB09100*, *T9999100*, and so on.	Numeric match(es): JOB00100, A0000100, Z100, and so on. EBCDIC match(es): *JOB09100*, *T9999100*, *Z99100*, and so on.
*5555555	Numeric match(es): J5555555 or T5555555, and so on. EBCDIC match(es): no additional matches.	Numeric match(es): J5555555, A5555555, Z5555555, and so on. EBCDIC match(es): *55555555*
*555555	Numeric match(es): JO555555 or ST555555 and so on. EBCDIC match(es), *T9555555*, *J8555555*, and so on.	Numeric match(es):JO555555, ZZ555555, and so on. EBCDIC match(es): *Z5555555*, *55555555*, and so on.
J*	Numeric match(es): not applicable. EBCDIC match(es): *JOB00100*, *JO123456*, *J7654321*.	Numeric match(es): not applicable. EBCDIC match(es):*JOB00100*, *JO123456*, *J7654321*, *J9*, *JAMES*, and so on.
?OB00100	Numeric match(es): not applicable. EBCDIC match(es) *JOB00100*.	Numeric match(es): not applicable. EBCDIC match(es):*JOB00100*, *ZOB00100*, and so on.

Table 6. Examples of jobs returned for STATJBIL when STATJBIH is blank. (continued)

STATJBIL	Examples of standard job ID matches	Examples of transaction job ID matches if STATSTPI is on
?0000100	Numeric match(es): not applicable. EBCDIC match(es): not applicable.	Numeric match(es): not applicable. EBCDIC match(es):*A0000100*, *Z0000100*, and so on.
?11	Numeric match(es): not applicable. EBCDIC match(es): not applicable.	Numeric match(es): not applicable. EBCDIC match(es):*A11*, *911*, and so on.
?1?	Numeric match(es): not applicable. EBCDIC match(es): not applicable.	Numeric match(es): not applicable. EBCDIC match(es):*A1A*, *B11*, and so on.
*0001?0	Numeric match(es): not applicable. EBCDIC match(es): not applicable.	Numeric match(es): not applicable. EBCDIC match(es):*A0000110*, *Z00001A0*, *K0001J0*, *KT0001P0*, and so on.
10*	Numeric match(es): not applicable. EBCDIC match(es): not applicable.	Numeric match(es): not applicable. EBCDIC match(es):*10000000*, *10A*, and so on.
ZZ#00100	Numeric match(es): not applicable. EBCDIC match(es): not applicable. Error if STATSTPI is not on.	Numeric match(es): not applicable. EBCDIC match(es):*ZZ#00100*

STATOJBI

Job ID value originally assigned to the job (used if STATSOJI is set). The original job ID can differ from the current job ID if the job was sent using NJE. The job ID is 2-8 characters, left justified, and padded on the right with blanks. The JOBID must start with either the character ‘J’ or ‘JOB’ a is followed by the original job number. Not supported in JES3.

STATOWNR

Current user ID that the security product has assigned as owner of the job (used if STATSOWN is set). The owner is 1-8 character, left justified, and padded on the right with blanks. The generic characters ‘*’ and ‘?’ are allowed.

STATSECL

Current SECLABEL that the security product has assigned to the job (used if STATSSEC is set). The SECLABEL is 1-8 character, left justified, and padded on the right with blanks. The generic characters ‘*’ and ‘?’ are allowed.

STATDEST

Default print or punch destination assigned to the job (used if STATSDST is set). The destination 1-18 character, left justified, and padded on the right with blanks. The format of the destination is the same as that allowed on DEST= on the OUTPUT statement.

In JES2, the user ID portion of the destination can contain the generic characters ‘*’ and ‘?’. This can match jobs with a default print route code that contains a corresponding user ID routing. However, destinations of the format ‘R*’, ‘RM*’, ‘RMT*’, ‘U*’, and ‘N*’ will not match jobs with a default print route code of remote, special local, or NJE.

STATORGN
NJE node where the job originated (used if STATSORG is set). The origin node is 1-8 character, left justified, and padded on the right with blanks. Only supported by JES2.

STATXEQN
NJE node where the job is to, or was, executed (used if STATSORG is set). The execution node is 1-8 character, left justified, and padded on the right with blanks. Only supported by JES2.

STATCLSL
The job class associated with the job (used if STATSCLS is set). The job class is 1-8 character, left justified, and padded on the right with blanks.

In JES2, the job class can be only 1 character long. The special job classes of ‘$’ for started tasks (STCs) and ‘@’ for time sharing users (TSUs) are also supported.

STATVOL
This keyword is supported when requesting information from a JES2 subsystem only. This field contains a list of up to four VOLSERs associated with SPOOL. A job is selected only if it has space on at least one of the specified SPOOL volumes (used if STATSVOL is set). The SPOOL VOLSERs are each 1-6 character, left justified, and padded on the right with blanks. Unused entries can be set to blanks or zero.

STATSYS
The name of the MVS system on which the job must be active (used if STATSSYS is set). The job can be actively executing or active on a device on that system. The system name is 1-8 character, left justified, and padded on the right with blanks. The generic characters ‘*’ and ‘?’ are allowed.

STATMEMB
This keyword is supported when requesting information from a JES2 subsystem only.The name of the JES member on which the job must be active (used if STATSMEM is set). The job can be actively executing or active on a device on that member. The member name is 1-8 character, left justified, and padded on the right with blanks. The generic characters ‘*’ and ‘?’ are allowed.

STATPRIO
The 1-byte binary priority associated with the job (used if STATSPRI is set). The job's priority must match exactly to be selected.

In JES2, valid priorities are 0 to 15.

STATPHAZ
The current job processing phase (used if STATSPHZ is set).

In JES2, the valid values for STATPHAZ are:

Phase Value	Description
STAT_INPUT	Job is active in input processing
STAT_WTCONV	Job is queued for conversion

STAT_CONV
Job is actively converting

STAT_VOLWT
Job is queued for SETUP (not currently used by JES2 code)

STAT_SETUP
Job is active in SETUP (not currently used by JES2 code)

STAT_SELECT
Job is queued for execution

STAT_ONMAIN
Job is actively executing

STAT_SPIN
JES2 is processing SPIN data sets for the JOB

STAT_WTBKDN
Job is queued for output processing

STAT_BRKDWN
Job is active in output processing

STAT_OUTPT
Job is on the hard copy queue

STAT_WTPURG
Job is queued for purge

STAT_PURG
Job is currently being purged

STAT_RECV
Job is active on an NJE SYSOUT receiver

STAT_WTXMIT
Job is queued for execution on another NJE node

STAT_XMIT
Job is active on an NJE JOB transmitter

STAT_EXEC
Job has not completed execution (combines multiple states in one phase request)

STAT_POSTEX
Job has completed execution (combines multiple states in one phase request)

In JES3, the valid values for STATPHAZ are:

Phase Value
Description

STAT_NOSUB
No subchain exists

STAT_FSSCI
Job is active in conversion/interpretation in an FSS address space

STAT_PSCBAT
Job is awaiting postscan (batch)

STAT_PSCDSL
Job is awaiting postscan (demand select)

STAT_FETCH
Job is awaiting volume fetch

STAT_VOLWT
Job is awaiting start setup

STAT_SYSSEL
Job is awaiting or active in MDS system select processing

STAT_ALLOC
Job is awaiting resource allocation

STAT_VOLUAV
Job is awaiting unavailable volume(s)

STAT_VERIFY
Job is awaiting volume mount(s)

STAT_SYSVER
Job is awaiting or active in MDS system verification processing

STAT_ERROR
Job encountered an error during MDS processing

STAT_SELECT
Job is awaiting selection on main

STAT_ONMAIN
Job is scheduled on main

STAT_BRKDWN
Job is awaiting breakdown

STAT_RESTART
Job is awaiting MDS restart processing

STAT_DONE
Main and MDS processing complete for job

STAT_OUTPT
Job is awaiting output service

STAT_OUTQUE
Job is awaiting output service writer

STAT_OSWAIT
Job is awaiting rsvd services

STAT_CMPLT
Output service complete for job

STAT_DEMSEL
Job is awaiting selection on main (demand select job)

STAT_EFWAIT
Ending function request waiting for I/O completion

STAT_EFBAD
Ending function request not processed

STAT_MAXNDX
Maximum request index value

STATSRVC
The name of the WLM service class assigned to the job (used if STATSSRV is set). Jobs only have service classes assigned to them if they have

completed conversion processing and have not completed execution processing. The service class is 0-8 characters, left justified, and padded on the right with blanks.

STATSENV

The name of scheduling environment (SCHENV= from the JOB statement) required by a job. (used if STATSSEN is set). Jobs only have scheduling environments assigned to them if they have completed conversion processing and have not completed execution processing. The scheduling environment is 0-16 characters, left justified, and padded on the right with blanks. The generic characters '*' and '?' are allowed.

STATOPT1

Option byte

STAT1RAC

If on, requests that the RACF authorization checks be made whether or not the caller of the SSI is APF authorized. This bit has no effect if the caller is not APF authorized. The RACF check that is made if the SECLABEL class is active is a dominance check of the seclabel of the job/SYSOUT compared to the seclabel of the requestor. This check is a JES2 only check.

STAT1LCL

Specifies that the destination information returned in fields STTRONOND, STTRXNOD, STTRPRRE/STTRPRND, STTRPURE/STTRPUND, and STSTDEST should suppress the local node name. If the destination is the local node, and there is no secondary routing information, the LOCAL is returned (instead of the local node name). If the destination is a secondary routing at the local node, then only the secondary routing is returned (for example, R1 is returned if the destination is remote at the local node). This option does not affect destinations information returned for the destinations other than the local node. The setting of the JES2 parameter DESTDEF SHOWUSER= will influence what is returned if this bit is on.

STAT1WSI

Specifies that for a STATOUTT request, JES3 will consolidate the SYSOUT elements (STATSE) within a job. One STATSE is returned for each Work Selection Identifier within a job. Each returned STATSE consolidates the information that would normally be returned in multiple SYSOUT elements with identical output characteristics. The STAT1WSI bit is ignored for any STATTYPE that is not equal to STATOUTT. This bit applies to JES3 only.

STAT1LMT

Limits the number of STATJQ elements returned using the value set in STATJQLM. Once the limit is reached, processing stops and control is returned to the caller. An SSOBRETN return code of STATRTOK (0) with a STATREAS reason code of STATRLMT (4) indicates processing ended due to this limit. The request cannot be restarted.

STAT1NDP

Suppresses duplicate data sets being returned by a DSLIST request.

STAT1B64

Specifies whether returned areas are permitted to be obtained by 64-bit storage.

STAT1WMS
Waits for latest MAS level information (JES2 only).

STAT1WMB
Wait for latest member information (JES2 only).

STATSSL3
More SYSOUT selection criteria. This is supported if STATVER is STATV050 or higher and the corresponding JES2 is z/OS V1R9 or higher.

STATSSLC
Select SYSOUT that is destined to the local node. If STATSSLC and STATSSNT are both on or both off, then the destination of the output will not be considered. However, either bit being on is mutually exclusive with STATSSDS being set.

STATSSNT
Select SYSOUT that is not destined to the local node. If STATSSLC and STATSSNT are both on or both off, then the destination of the output will not be considered. However, either bit being on is mutually exclusive with STATSSDS being set.

STATSSNJ
For selection purposes, treat SYSOUT destined to an NJE node as OUTDISP of WRITE regardless of the actual OUTDISP. This has no effect if STATSWRT, STATSHOL, STATSKEP and STATSLVE are all on or all off.

STATSWRT
Select output hat has an OUTDISP of WRITE.

STATSHOL
Select output that has an OUTDISP of HOLD.

STATSKEP
Select output that has an OUTDISP of KEEP.

STATSLVE
Select output that has an OUTDISP of LEAVE.

Note: Setting STATSWRT, STATSHOL, STATSKEP and STATSLVE all on has the same effect as setting them all off.

STATSSL4
STATSSL4 is used to support filtering of information returned based on transaction name, transaction job id, or transaction owner.

STATSTPN
Transaction job name filtering. STATSTPN cannot be specified with STATSJIL.

If this bit is on, information about jobs and SYSOUT associated with a transaction job name that matches STATJOBN or STATJBNP is returned.

The STATSTPN bit is ignored if one of the following situations occurs:

- STATSJBN is not set.
- Requesting verbose information
- STATSOJD is not set for JES2.
- JES2 is used but JES2 is not running with checkpoint mode z11.

STATSTPI
Transaction job ID filtering. STATSTPI cannot be specified with STATSJIL.

- If STATSTPI is not set, only jobs and SYSOUT that has a job id in the range specified by STATJBIL and STATJBIH are returned.
- If STATSTPI is set, jobs and SYSOUT associated with a SYSOUT data set with a transaction job id are also selected. The job id is in the range specified by STATJBIL and STATJBIH.

The STATSTPI bit is ignored if one of the following situations occurs:

- STATSJBI is not set.
- Requesting verbose information
- STATSOJD is not set for JES2.
- JES2 is used but JES2 is not running with checkpoint mode z11.

STATSTPU
SYSOUT owner filtering.

If this bit is on, jobs and SYSOUT that are associated with a SYSOUT data set whose transaction owner matches STATOWNR are returned.

The STATSTPU bit is ignored if one of the following situations occurs:

- STATSOWN is not set.
- Requesting verbose information
- JES2 is used but JES2 is not running with checkpoint mode z11.

STATSSJ1
If SYSOUT is destined to STATJOBN or STATJBNP on the local node, STATSSJ1 indicates to match using the first jobname supplied in STATJOBN in the following situations:

- If STATSSJ1 is on with STATSJBN
- If STATSTPN is on with STATSJBN

STATSSJ1 is ignored if STATSJBN is off.

STAT1CHR
One byte value that indicates a one character wild card.

STATZOMO
One byte value that indicates a zero or more characters wild card.

STATSEL5
Flag byte that describes the filters to use to select jobs. Each bit corresponds to a filter field which must match any job returned.

STATSCOR
Use STATJCRP as a pointer to a job correlator filter. STATSCOR cannot be specified with STATSJBI, STATSCTK or STATSJIL. If specified on a JES3 request, no results will be returned.

STATJQLM
Limit on how many STATJQs can be returned on this call (used if STAT1LMT is set).

STATTRSA
Pointer to a STATJQ or STATSE (or zero) for which verbose 31-bit data is to

be obtained. If non-zero, use this terse address to expand data obtained previously through a terse JOB or SYSOUT extended status call (with no intervening STATMEM call). Only valid when both STATVER and JES2 are at a STATV040 level or higher. On JES3, the calling system must be at the z/OS V1R10 level or higher and the global system must be at the z/OS V1R7 level or higher.

STATTRSA_64
Pointer to a STATJQ or STATSE (or zero) for which verbose 64-bit data is to be obtained. If non-zero, use this terse address to expand data obtained previously through a terse JOB or SYSOUT extended status call (with no intervening STATMEM call). Only valid when both STATVER and JES2 are at a STATV040 level or higher.

STATCTKN
Pointer to the SYSOUT token to be used for selection (used if STATSCTK is set). The token can only be obtained from dynamic allocation or from a previous extended status request.

STATSCRE
The user ID that was in control when the SYSOUT data set was allocated (used if STATSSOW is set). The user ID is 1-8 characters, left justified, and padded on the right with blanks. The generic characters '*' and '?' are allowed.

STATSDES
Destination to which the SYSOUT is routed (used if STATSSDS is set). The destination is 1-18 characters, left justified, and padded on the right with blanks. The format of the destination is the same as that allowed on DEST= on the OUTPUT statement. IP addresses are not allowed.

In JES2, the user ID portion of the destination can contain the generic characters '*' and '?'. This can match SYSOUT with a route code that contains a corresponding user ID routing. However, destinations of the format 'R*', 'RM*', 'RMT*', 'U*', and 'N*' will not match SYSOUT with a route code of remote, special local, or NJE.

STATSCLA
The class associated with the SYSOUT (used if STATSSCL is set). The class is 1-8 characters, left justified, and padded on the right with blanks.

Currently, only 1 character SYSOUT classes are valid.

STATSWTR
The external writer name associated with the SYSOUT (used if STATSSWR is set). The external writer name is 1-8 characters, left justified, and padded on the right with blanks. The generic characters '*' and '?' are allowed.

STATSFOR
The SYSOUT forms name for selection (used if STATSSFR is set). The forms name is 1-8 characters, left justified, and padded on the right with blanks. The generic characters '*' and '?' are allowed. On JES3, the global must be at the z/OS V1R7 level or higher.

STATSPRM
The process mode name for selection (used if selection (if STATSSPR is set). The process mode name is 1-8 characters, left justified, and padded on the right with blanks. The generic characters '*' and '?' are allowed. On JES3, the global must be at the z/OS V1R7 level or higher.

STATSUBR
The submitting user ID for selection (used if STATSSUB is set). The submitting user ID is 1-8 characters, left justified, and padded on the right with blanks. The generic characters '*' and '?' are allowed. This filter is available in JES3 only. On JES3, the global must be at the z/OS V1R7 level or higher.

Set all other fields in the IAZSSST control block to binary zeros before issuing the first in a series of IEFSSREQ macro calls. A memory management call (STATTYPE set to STATMEM) is required before updating output fields.

There are fields that relate to the additional input filters. Each filter is a count followed by a pointer to a list of values. Any one value that matches is considered passing. You must place the first value in the base field. Failure to do so will result in an invalid parameter error. For example, to filter on the job classes A, B, C, or D you would set the following:

```
STATCLSL = C'A'
STATCLSN = F'3'
STATCLSP = A(CLASSLST)
CLASSLST = CL8'B',CL8'C',CL8'D'
```

Table 7. SSI Function Code 80 Filters

Filter (base field)	Selection Bit	Flag Byte (contains selection bit)	Array Pointer	Array Count	Description
STATCLSL	STATSCLS	STATSEL1	STACLSP	STATCLSN	Job class filters
STATJOBN	STATSJBN	STATSEL1	STATJBNP	STATJBNN	Job name filters
STATDEST	STATSDST	STATSEL1	STATDSTP	STATDSTN	Job destination filters
STATPHAZ	STATSPHZ	STATSEL3	STATPHZP	STATPHZN	Job phase filters
STATSCLA	STATSSCL	STATSSL1	STATSCLP	STATSCLN	SYSOUT class filters
STATSDES	STATSSDS	STATSSL1	STATSDSP	STATSDSN	SYSOUT destination filters

The new fields are as follows:

Field Name
Description

STATCLSN
Additional job class count

STATCLSP
Pointer to STATCLSL extension containing additional job class filters

STATJBNN
Additional job name count when STATSJBN is specified, and a count of job IDs when STATSJIL is specified

STATJBNP
Pointer to STATJOBN extension containing additional 8 character job name filters when STATSJBN is specified. A list of 8 character job IDs to return when STATSJIL is specified.

STATDSTN
Additional job destination count

STATDSTP
Pointer to STATDEST extension containing additional job destination filters

STATPHZN
Additional job phase count

STATPHZP
Pointer to STATPHAZ extension containing additional job phase filters

STATSCLN
Additional SYSOUT class count

STATSCLP
Pointer to STATSCLA extension containing additional SYSOUT class filters

STATSDSN
Additional SYSOUT destination count

STATSDSP
Pointer to STATSDES extension containing additional SYSOUT destination filters.

STATJCRP
Pointer to the job correlator to be used for selection (used if STATSCOR is set).

These new filters are only honored if STATVER is STATV050 or higher and JES2 is z/OS V1R9 or higher or JES3 is z/OS V1R10 or higher.

Output Register Information

When control returns to the caller, the general purpose registers contain:

Register	**Contents**
0	Used as a work register by the system
1	Address of the SSOB control block
2 — 13	Same as on entry to call
14	Return address
15	Return code

Return Code Information

The SSI places one of the following decimal return codes in register 15. Examine the return code to determine if the request was processed.

Return Code (Decimal)	**Meaning**
SSRTOK (0)	The extended status function call has completed. Check the SSOBRETN field for specific function information.
SSRTNSUP (4)	The subsystem specified in the SSIBSSNM field does not support the extended status function call.
SSRTNTUP (8)	The subsystem specified in the SSIBSSNM field exists but is not active.
SSRTNOSS (12)	The subsystem specified in the SSIBSSNM field is not defined to MVS.
SSRTDIST (16)	The pointer to the SSOB control block or the SSIB control block is not

valid, or the function code specified in the SSOBFUNC field is greater than the maximum number of functions supported by the subsystem specified in the SSIBSSNM field.

SSRTLERR (20)
Either the SSIB control block or the SSOB control block has incorrect lengths or formats.

SSRTNSSI(24)
The SSI has not been initialized.

STATRTRS (148)
STATTERS or STATOUTT requested with incorrect STATCTKN type.

STATRJST (176)
Incorrect combination of 31-bit and 64-bit requests.

Output Parameters

Output parameters for the function routine are:

- SSOBRETN
- STATREAS
- STATREA2
- IAZSSST

SSOBRETN Contents: When control returns to the caller and register 15 contains a zero, the extended status function places one of the following decimal values in the SSOBRETN field:

Value (Decimal)
Meaning

STATRTOK (0)
Input parameters were valid, check STATJOBF and STATJOBF_64 for output.

STATINVA (4)
The search arguments, though syntactically valid, cannot be used (for example, specifying a volume serial in STATVOL that is not being used as a SPOOL volume).

STATLERR (8)
Logic error in one of the search arguments. See output parameter STATREAS (below) for details as to the exact error.

STATINVT (12)
The request type in STATTYPE is not valid.

STATREAS Contents: When SSOBRETN contains a 0 (STATRTOK) indicating a successful request, the field STATREAS indicates the specific condition detected. STATREAS will be set to one of the following decimal values:

Value (Decimal)
Meaning

0 (0) Processing completed normally.

STATRLMT (4)
Processing ended due to reaching the output limit specified in STATJQLM.

STATREAS Contents: When SSOBRETN contains an 8 (STATLERR) indicating a logic error, the field STATREAS indicates the specific error detected. STATREAS will be set to one of the following decimal values:

Value (Decimal)
Meaning

STATRDST (4)
Destination in STATDEST is not valid.

STATRJBL (8)
Low job ID in STATJBIL is not valid.

STATRJBH (12)
High job ID in STATJBIH is not valid.

STATRJLM (16)
The high job ID in STATJBIH is less than the low job ID in STATJBIL.

STATRCLS (20)
Job class in STATCLSL is not valid.

STATRVOL (24)
The volume list in STATVOL is null or has characters that are not that are not allowed.

STATRJBH (28)
The phase specified in STATPHAZ is either not valid or not supported by this subsystem.

STATRQUE (32)
Unable to access job queue.

STATREYE (36)
The eyecatcher in STATEYE is not C'STAT'

STATRLEN (40)
The length of the IAZSSST specified in STATLEN is too short.

STATRJBN (44)
The job name in STATJOBN is not valid.

STATROWN (48)
The owning user ID in STATOWNR is not valid.

STATRSYS (52)
The system name in STATSYS is not a valid system name.

STATRMEM (56)
The member name in STATMEMB is not valid.

STATRCST (60)
STATSEL2 specifies to select only non-batch jobs and batch job class selection was specified in STATSCLS.

STATROJB (64)
Original job ID in STATOJBI is not valid.

STATRSEC (68)
The SECLABEL in STATSECL is not valid.

STATRORG (72)
The origin node in STATORGN is not defined.

STATRXEQ (76)
The execution node in STATXEQN is not defined.

STATRPRI (80)
The priority in STATPRIO is not valid for this JES.

STATRSVC (84)
The service class in STATSRVC is not valid.

STATSSEN (88)
The scheduling environment in STATSSEN is not valid.

STATRSCT (92)
The SYSOUT token pointed to by STATCTKN is not valid.

STATRSCR (96)
The SYSOUT owner in STATSCRE is not valid.

STATRSSD (100)
The SYSOUT destination in STATSDES is not valid.

STATRSSC (104)
The SYSOUT class in STATSCLA is not valid.

STATRSXW (108)
The SYSOUT external writer in STATSWTR is not valid.

STATRECJ (112)
STATSJBI and STATSCTK are mutually exclusive.

STATRVBM (116)
STATVRBO or STATOUTV requested with incorrect filters.

STATRBEA (120)
STATTRSA or STATTRSA_64 does not point to a valid STATJQ or STATSE.

STATRSFR (124)
STATSFOR is not valid.

STATRSPR (128)
STATSPRM is not valid.

STATRSUP (132)
Function or filter not supported.

STATRSUB (136)
STATSUBR is not valid.

STATRNEX (140)
STATTRSA or STATTRSA_64 points to a nonexistent job.

STATRIDS (144)
STATRIDS indicates STATSSDS is set with either STATSSLC or STATSSNT.

STATRTRS (148)
STATTERS or STATOUTT requested with incorrect token type (SYSOUT token) specified on STATCTKN.

STATRWIL (152)
Same non zero value specified for both STAT1CHR and STATZOMO.

STATRJIL (156)
STATSJIL is set with either STATSJBN, STATSJBI, STATSCTK, STATSTPI, STATSTPN, STATSOJD or STATSCOR.

STATRJIP (160)
At least one of the JOBIDs in the list pointed to by STATJBNP is not valid.

STATRJIZ (164)
STATSJIL is set and either STATJBNN or STATJBNP is zero.

STATRJCR (168)
The job correlator pointed to by STATJCRP is not valid.

STATRJCO (172)
STATSCOR is set with STATSJBI, STATSCTK or STATSJIL.

Note: When an extended status request is made as a broadcast call, SSOBRETN is set to the maximum return code of all subsystems that service the call, but STATREAS is set to the reason code of the last subsystem that services the call. It is therefore possible in a case where JES2 and JES3 exist in the same complex for SSOBRETN to be set to STATLERR and STATREAS to be set to 0, if JES3 does not support the function or filter and JES2 does. This does not apply in cases where JES2 supports a function or filter and JES3 does not, because the primary subsystem always services a call before any secondary subsystems and JES3, if present, is always the primary.

STATREA2 Contents: The content of this field is subsystem dependent. For more information contact IBM service.

IAZSSST Contents: The extended status service returns two types of data, fixed data in the IAZSSST and elements for each job that matched the filters specified. The following describes the fixed data fields returned in the IAZSSST:

Field Name
Description

STATVERO
Version level of the last subsystem to respond to the request. The first byte is the high-level version of the responder. The second byte is the service level of the responder. For a more detailed explanation of the version and service levels, refer to the IAZSSST mapping macro in SYS1.MACLIB.

STATJOBF
Pointer to a chained list of output elements that contains information about the jobs that match the input filters. There is one element per job. See "Job information elements" on page 213 for a description of each element. If SYSOUT information is requested, the SYSOUT output elements are chained out of the job level output element (of the owning job). See "SYSOUT information elements" on page 228 for a description of each SYSOUT level element.

STATNRJQ
The number of jobs that match the specified filter requirements.

STATNRSE
The number of SYSOUT elements that match the specified filter requirements.

STATOFG1
Output information flags.

Field Value
Description

STATO1CP
Information was obtained from a copy of the JOB or output queue. (JES2 Only)

STATO164
Indicates whether 31-bit pointers, 64-bit pointers, or both (in the case of a broadcast SSI) are used. When STATO164 is set on return, the 64-bit versions of the chaining fields should be used. For broadcast SSIs, if STATO164 is on, it is possible to have both 31-bit chained elements anchored from STATJOBF and 64-bit chained elements anchored from STATJOBF_64. In this case, the caller should check both queue heads and use the appropriate chain pointers based on which queue is being processed at the time.

STATOHLD
IAZOHLD table for processing STSTHRSN.

STATOHIX
IAZOHLD index table for processing STSTHRSN.

STATJOBF_64
Address of first Job Queue Element (64 bit)

STATPHTP
Address of text table used by the "Text lookup service (IAZTLKUP)" on page 241 to convert a job phase code to an equivalent text value.

STATJDTP
Address of text table used by the "Text lookup service (IAZTLKUP)" on page 241 to convert a job delay reason bit value to an equivalent text value.

Job information elements

For each job that matches specified filter requirements, an information element is added to the chain pointed to by STATJOBF or STATJOBF_64. Each element is composed of the following:

- A variable-sized prefix (mapped by the STATJQ DSECT)
- A fixed-size job queue element header (mapped by the STATJQHD DSECT)
- One or more variable-sized data sections

Information Element Prefix: Each job information element starts with a prefix area. This area is mapped by the STATJQ DSECT in the IAZSSST macro. STATJOBF or STATJOBF_64 points to the start of the first prefix area. Subsequent areas are chained using the STJQNEXT field. Because the size of the prefix area can vary as a result of service being applied, do not use the equate STJQSIZE to access the data that follows the prefix. To obtain the address of subsequent fields, add the field STJQOHDR to the start of the prefix.

The fields in the STATJQ prefix are:

Field Name
Description

STJQEYE
Eycatcher C'SJQE'.

STJQOHDR
Offset from the start of the STATJQ to the first job information data section.

STJQNEXT
31-bit address of the next STATJQ area on the STATJOBF chain.

STJQNEXT_64
64-bit address of the next STATJQ area on the STATJOBF_64 chain.

STJQOSS
Name of the subsystem that created this entry.

STJQSE
If SYSOUT data is requested, this is the 31-bit head of the SYSOUT information elements (STATSE) for this job.

STJQSE_64
If SYSOUT data is requested, this is the 64-bit head of the SYSOUT information elements (STATSE) for this job.

STJQVRBO
31-bit address of STATVE for this job.

STJQVRBO_64
64-bit address of STATVE for this job.

STJQVSRB
31-bit address of first STATVO for this job.

STJQVSRB_64
64-bit address of first STATVO for this job.

Information Element Data Sections: The variable data sections, which contain information about the job, follow the STATJQ prefix. Each section starts with a 2-byte length, a 1-byte section type, and a 1-byte section modifier. The data length can be from 1 through 65535 bytes. The type and modifier are used to determine the mapping needed to access the data in the section. The first section after the STATJQ prefix is a special 4-byte section which describes the length and type of all sections that follow. The DSECTs that map each section are in the IAZSSST macro.

Job Queue Element 1st Section: This section is mapped by the STATJQHD DSECT and is identified by a type of STHD1HDR (0) and a modifier of STHD1MOD (0). This is the only fixed-size section with a length of STHDSIZE (4 bytes). The length in this section is the total length of all sections that follow.

The fields in the STATJQHD section are:

Field Name
Description

STHDLEN
Length of all sections which follow (including this section)

STHDTYPE
Section type identifier of STHD1HDR (0)

STHDMOD
Section type modifier of STHD1MOD (0)

STHDSIZE
Length of this section (4 bytes)

Job Queue Element Terse Section: This section is mapped by the STATJQTR DSECT and is identified by a type of STTRTERS (1) and a modifier of STTRTMOD (0). All job information elements have at least one section of this type. This section contains information common to all types of jobs.

The fields in the STATJQTR section are:

Field Name
Description

STTRLEN
Length of this section

STTRTYPE
Section type identifier of STTRTERS (1)

STTRMOD
Section type modifier of STTRTMOD (0)

STTRNAME
Job name

STTRJID
Job ID

STTROJID
Original job ID. This might be different from STTRJID if the job was sent using NJE.

STTRCLAS
Job execution class.

In JES2, started tasks (STCs) have a job class of '$' and time sharing users (TSUs) have a job class of '@'.

STTRONOD
Job's origin node. Whether or not the local node name appears in the destination depends on the setting of the STAT1LCL option bit.

STTRXNOD
Job's execution node. Whether or not the local node name appears in the destination depends on the setting of the STAT1LCL option bit.

STTRPRND
The default print node for the job. Whether or not the local node name appears in the destination depends on the setting of the STAT1LCL option bit.

STTRPRRE
The default print remote or user ID for the job. Whether or not the local node name appears in the destination depends on the setting of the STAT1LCL option bit.

STTRPUND
The default punch node for the job. Whether or not the local node name appears in the destination depends on the setting of the STAT1LCL option bit.

STTRPURE
The default punch remote for the job. Whether or not the local node name appears in the destination depends on the setting of the STAT1LCL option bit.

STTROUID
The user ID currently assigned as the owner of the job by the security product.

STTRSECL
The SECLABEL currently assigned to the job by the security product.

STTRSYS
MVS system name where the job is active (blank if the job is not active).

STTRMEM
JES member name where the job is active (blank if the job is not active).

STTRDEVN
JES device name on which the job is active (blank if the job is not active on a device).

STTRPHAZ
Current job phase. See STATPHAZ for a list of possible values.

STTRHOLD
Current hold state for the job.

Field Value
Description

STTRJNHL
Job is not held

STTRJHLD
Job is held

STTRJHLD
Job is held for duplicate job name

STTRJTYP
Type of job

Field Value
Description

STTRSTC
Started task

STTRTSU
Time sharing user

STTRJOB
Batch job

STTRAPPC
APPC initiator

STTRPRIO
Job's priority

STTRARMS
Job's automatic restart manager status

Bit Value
Description

STTRARMR
Job is automatic restart manager registered

STTRARMW
Job is awaiting automatic restart manager restart

STTRMISC
Miscellaneous indicators

Bit Value
Description

STTRMSPN
JESLOG for this job is spinable

STTRPEOM
Indicates job is being process for End of Memory

STTRJCLD
JESJCLIN dataset available

STTRSYSL
MVS SYSLOG job

STTRMXRC
The status of job execution. While the job is executing, the STTRMXCC value (if set) is dependent on the JOBRC= value that is specified for the job. By default, STTRMXCC is set to the highest return code of any executed step; however, STTRMXCC can be the return code of a specific step or the last step that executed. The STTRXREQ bit is set to on if the STTRMXCC value is affected by JOBRC processing.

Field Name	Description
STTRXIND	Job completion indicator. The first four bits indicate how to interpret STTRMXCC. The remaining four bits identify the actual completion type.

Bit Value	Description
STTRXAB	If this bit is on, STTRMXCC contains an ABEND code.
STTRXCDE	If this bit is on, STTRMXCC contains a completion code.
STTRXREQ	The JOBRC completion code was set.
STTRXUNK	No completion information is available. This can occur if the job has not completed, or if the job completed but the completion information was not saved.
STTRXNRM	Job executed and ended normally. (+)
STTRXCC	Job executed and ended by completion code. (+)
STTRXJCL	Job had a JCL error.
STTRXCAN	Job was canceled before execution completed.
STTRXABN	Job ABENDed during execution. (+)
STTRXCAB	Converter ABENDed while processing the job.
STTRXSEC	Job failed input processing security checks.

STTRXEOM
Job failed during execution and was processed in end-of-memory. (+)

STTRXCNV
Job did not execute due to a converter error.

STTRXSYS
Job was executing when a system failed.

STTRMXCC
ABEND or completion code for (+)-marked completion types. If STTRXAB is on, then the field contains an ABEND code–either the first 12 bits of STTRMXCC are set to the System ABEND code, or the last 12 bits are set to the User ABEND code. If STTRXCDE is on, then the field contains a return code in the last 12 bits.

STTRQPOS
Job's position on its queue. This is only returned when the input flag STATSQPS is set. In JES3, when the job has not been selected for main, but has at least reached the converter/interpreter phase, the job queue position is determined relative to jobs in the same Generalized Main Scheduling (GMS) group that are ahead of the job in question.

STTRJNUM
Binary job number.

STTRSPUS
Percent SPOOL utilization. The format is xxx.xxxx. Value is ***.**** if unknown.

STTRSLOG
If this is a SYSLOG job (STTRSYSL is on) MVS system name log is for

STTRJCOR
Job correlator. Refer to *z/OS JES Application Programming* for more information on the job correlator.

STTRSPAC
Number of track groups of SPOOL space used by the job. A value of **-1** indicates that the count is not available.

Job Queue Element JES2 Terse Section: This section is mapped by the STATJ2TR DSECT and is identified by a type of STJ2TERS (2) and a modifier of STJ2TMOD (0). This section is present if the job information came from a JES2 subsystem. This section contains JES2-specific information common to all types of jobs.

The fields in the STATJ2TR section are:

Field Name
Description

STJ2LEN
Length of this section

STJ2TYPE
Section type identifier of STJ2TERS (2)

STJ2MOD
Section type modifier of STJ2TMOD (0)

STJ2FLG1
General flag byte

Bit Value
Description

STJ21PRO
Job is protected

STJ21IND
Job is set to independent mode

STJ21SYS
Job represents a system data set

STJ21CNW
Job can only be processed by a converter that can wait for OS resources

STJ21RBL
Job is on the JES2 rebuild queue

STJ2JKEY
The JES2 job key for the JOB

STJ2SPOL
The SPOOL token associated with the job

STJ2SPAC
In z/OS 2.1 and later versions, STTRSPAC replaces STJ2SPAC.

STJ2DPNO
Binary default print node

STJ2DPRM
Binary default print remote

STJ2DPUS
Default print user ID

STJ2INPN
Binary input node

STJ2XEQN
Binary execution node (if job has completed execution).

STJ2JQEI
Index of JQE

STJ2OFSL
Offload status mask

STJ2BUSY
Binary busy byte

Job Queue Element Member Affinity Section: This section is mapped by the STATAFFS DSECT and is identified by a type of STAFFIN (3) and a modifier of STAFTMOD (0). This section is present if the job has affinities to a subset of members. This section is not present if the job can run on any member.

The fields in the STATAFFS section are:

Field Name
Description

STAFLEN
Length of this section

STAFTYPE
Section type identifier of STAFFIN (3)

STAFMOD
Section type modifier of STAFTMOD (0)

STAFNUM
Number of members for which the job has affinity

STAFMEMB
First member for which job has affinity. Other member names follow after this member name. The number of member names present is in field STAFNUM.

Job queue element sections

Job Queue Element Execution Scheduling Section: This section is mapped by the STATSCHD DSECT and is identified by a type of STSCHED ('04'x) and a modifier of STSCTMOD ('00'x). This section is present if the job is scheduled for execution.

The fields in the STATSCHD section are:

Field Name
Description

STSCLEN
Length of this section.

STSCTYPE
Section type identifier of STSCHED ('04'x)

STSCMOD
Section type modifier of STSCTMOD ('00'x)

STSCAHLD
Reasons why the job will not run. Also refer to STSCAHL2.

Bit Value
Description

STSCJCLS
Job class is held

STSCJCLM
Job class limit has been reached

STSCJSCH
Scheduling environment is not available

STSCJAFF
Systems for which the job has affinity are not available

STSCJSPL
Spool volumes needed by the job are not available

STSCJBSY
Job is busy on a device

STSCJSCF
The RACF SECLABEL by system option is in effect. The SECLABEL associated with the job (STTRSECL) is not available on any active system

STSCNOSY
No system(s) with the correct combination of resources is available

STSCFLG1
General flag byte

Bit Value
Description

STSC1JCM
JOBCLASS mode: Off is JES mode; On is WLM mode.

STSCASID
ASID where job is executing (zero if not active).

STSCSRVC
Service class associated with the job

STSCESTT
Estimated time to execute (in seconds) for the job. This is only available if the job:

- Is awaiting execution
- Is scheduled to a WLM-managed job class
- Is not held
- Can currently run (STSCAHLD is zero)

If the estimated time is not available, this field is set to negative 1 (-1). The time is calculated on the average queue time for a job in this job class (STSCAVGQ) and the amount of time this job has been queued (STSCQTIM). If the job has been waiting longer than average, STSCESTT will be set to negative 1 (-1).

STSCSENV
Scheduling environment required by the job.

STSCQPOS
Position of this job on a WLM service class queue (if STATSPOS is on)

STSCQNUM
Number of jobs on this WLM service class queue (if STATSPOS is on)

STSCQACT
Number of active jobs on this WLM service class queue (if STATSPOS is on)

STSCAVGQ
Average queue time for jobs in this WLM service class. STSCAVGQ is one component of STSCESTT. If STSCESTT is not available, this field is zero (0). If the job has already waited more than the average wait time, this field (and STSCQTIM) is set to negative 1 (-1).

STSCQTIM
Actual queue time for this job. STSCQTIM is one component of STSCESTT. If STSCESTT is not available, this field is zero (0). If the job has already waited more than the average wait time, this field (and STSCAVGQ) is set to negative 1 (-1).

STSCPSEQ
The minimum z/OS level required for this job to run (in the format used for ECVTPSEQ system field)

STSCAHL2
Reasons why the job will not run. Also refer to STSCAHLD.

Bit Value	Description
STSCMLEV	No system is available with the minimum required z/OS system level (see STSCPSEQ).

STSCSIZE
Length of basic section

Job Queue Element Schedulable Systems Section: This section is mapped by the STATSCHS DSECT and is identified by a type of STSCHED ('04'x) and a modifier of STSSTMOD ('01'x). This section is present if the job is scheduled for execution, requires a scheduling environment, and that environment is available on at least one system. This section lists the MVS system names where the scheduling environment is available. This section is not returned by JES3 subsystems.

The fields in the STATSCHS section are:

Field Name	Description
STSSLEN	Length of this section.
STSSTYPE	Section type identifier of STSCHED ('04'x)
STSSMOD	Section type modifier of STSSTMOD ('01'x)
STSSNUM	Number of systems that have the required scheduling environment.
STSSSYS	Name of first system that has the required scheduling environment. Other system names follow after this system name. The number of system names present is in field STSSNUM.
STSSSIZE	Length of the scheduling systems section.

Job Queue Element SECLABEL Availability Section: This section is mapped by the STATSCLF DSECT and is identified by a type of STSECLAF ('05'x) and a modifier of STSLTMOD ('00'x). This section is present if the the SECLABEL by system RACF option is enabled and the job is queued for conversion processing or execution. This section lists the MVS system names where the SECLABEL associated with the job (STTRSECL) is active (available). This section is not returned by JES3 subsystems.

The fields in the STATSCLF section are:

Field Name	Description
STSLLEN	Length of this section
STSLTYPE	Section type identifier of STSECLAF ('05'x)

STSLMOD
Section type modifier of STSLTMOD ('00'x)

STSLNUM
Number of systems where the SECLABEL is active

STSLSYS
Name of first system where the SECLABEL is active. Other system names follow after this system name. The number of system names present is in field STSLNUM.

STSLSIZE
Length of the SECLABEL affinity section.

Job Queue Element JES3 Terse Section: This section is mapped by the STATJ3TR DSECT and is identified by a type of STJ3TERS and a modifier of STJ3MOD (X'0'). This section is present only if the job is owned by a JES3 subsystem.

The fields in the STATJ3TR section are:

Field name	Description
STJ3LEN	Length of this section
STJ3TYPE	Section type identifier of STJ3TERS
STJ3MOD	Section type modifier of STJ3TMOD (X'0')
STJ3SPOL	Spool data token or zero
STJ3JSTT	List of reasons, by system, why job is waiting to run (RQJSTAT)
STJ3JSTM	List of system names corresponding to STJ3JSTT, terminated by zero

Job Queue Element Verbose Prefix: This section is mapped by the STATVE DSECT.

The fields in the STATVE prefix are:

STVEEYE
Eye catcher C'SJVE'

STVEOHDR
Offset from the start of the STATVE to the first information section.

STVEJOB
| 31-bit address of the associated job queue data element.

| **STVEJOB_64**
| 64-bit address of the associated job queue data element.

STVESIZE
Size of the prefix.

Job Verbose Element 1st Header Section: This section is mapped by the STATJVHD DSECT and is identified by a type of STJV1HDR and a modifier of STJV1MOD (X'0').

Field name
Description

STFVLEN
Length of entire Job verbose header (Maximum value is 65535)

STJVTYPE
Header type identifier of STJV1HDR

STJVMOD
Section type modifier of STJV1MOD (X'0')

STJVSIZE
Size of 1st Header Section

Job Queue Element Verbose Section: This section is mapped by the STATJQVB DSECT and is identified by a type of STVBVRBO (X'') and a modifier of STVBVMOD (X'0'). Data in this section requires disk I/O and a STATVER=STATV040.

Field name
Description

STVBLEN
Length of this section

STVBTYPE
Section type identifier of STVBVRBO

STVBMOD
Section type modifier of STVBVMOD (X'0')

STVBFLG1
Section flag byte

Bit value
Description

STBB1ERR
Error returning verbose data (terse data section returned)

STVBJCPY
Job copy count

This value is meaningful in JES2 only. JES3 always returns 1.

STVBLNCT
Job line count

This value is meaningful in JES2 only. JES3 always returns 0.

STVBIDEV
Input device name

STVBISID
Input system/member

Note: In JES3, for a TSO or INTRDR submission job, STVBISID is set to the system name on which the submitting user or job is active. For all other submissions, STVBISID is set to the JES3 global. Also, for a TSO or INTRDR submission from a user or job that was active on a system running a JES3 release lower than z/OS V1R7, STVBISID is set to the JES3 global.

STVBJCIN
Job input count

STVBJLIN
Job line count

STVBJPAG
Job page count

STVBJPUN
Job card (output) count

STVBRTS
Input start time/date

Field name	Description
STVBRSTS	Input start time. This is in hundredths of seconds since midnight.
STVBRTSD	Input start date. This is in the form 0cyydddF.

STVBRTE
Input end time/date

Field name	Description
STVBRTET	Input end time. This is in hundredths of seconds since midnight.
STVBRTED	Input end date. This is in the form 0cyydddF.

STVBSYS
Execution MVS system name.

STVBMBR
Execution JES member name.

STVBXTS
Execution start time/date:

Field name	Description
STVBXTST	Execution start time. This is in hundredths of seconds since midnight.
STVBXTSD	Execution start date. This is in the form 0cyydddF.

STVBXTE
Execution end time/date:

Field name	Description
STVBXTET	Execution end time. This is in hundredths of seconds since midnight.

STVBXTED
Execution end date. This is in the form 0cyydddF.

STVBJUSR
JMRUSEID field

STVBMCLS
Message class (Job card)

STVBNOTN
Notify Node

STVBNOTU
Notify user ID

STVBPNAM
Programmer's name (from Job card)

STVBACCT
Account number (from Job card)

STVBDEPT
NJE department

STVBBLDG
NJE building

STVBROOM
Job card room number

In JES3, the values STVBACCT, STVBDEPT, STVBBLDG, and STVBROOM are filled in from the ACCT=, DEPT=, BLDG=, and ROOM= parameters on the //*NETACCT statement.

STVBJVDT
JDVT name for job

STVBSUBU
Submitting user ID

STVBSUBG
Submitter's security group name. In JES3, this field contains the owner's security group name.

STVBMLRC
The maximum LRECL of the JCLIN stream

STVBMXRC
The status of job execution. This field is not affected by JOBRC processing.

Field Name
Description

STVBXIND
Job completion indicator. The first four bits indicate how to interpret STVBMXCC. The remaining four bits identify the completion type.

Bit Value
Description

STVBXAB
If this bit is on, STVBMXCCcontains an ABEND code.

STVBXCDE
If this bit is on, STVBMXCC contains a completion code.

STVBXUNK
No completion information is available. This can occur if the job has not completed, or if the job completed but the completion information was not saved.

STVBXNRM
Job executed and ended normally. (+)

STVBXCC
Job executed and ended by completion code. (+)

STVBXJCL
Job had a JCL error.

STVBXCAN
Job was canceled before execution completed.

STVBXABN
Job ABENDed during execution. (+)

STVBXCAB
Converter ABENDed while processing the job.

STVBXSEC
Job failed input processing security checks.

STVBXEOM
Job failed during execution and was processed in end-of-memory. (+)

STVBXCNV
Job did not execute due to a converter error.

STVBXSYS
Job was executing when a system failed.

STVBMXCC
ABEND or completion code for (+)-marked completion types. If STVBXAB is on, then the field contains an ABEND code–either the first 12 bits of STVBMXCC are set to the System ABEND code, or the last 12 bits are set to the User ABEND code. If STVBXCDE is on, then the field contains a return code in the last 12 bits.

STVBSIZE
Size of verbose information

Job Queue Element Security Section (mapped by SAF token): This section is mapped by the STATJQSE DSECT and is identified by a type of STSESEC and a modifier of STSESMOD(X'0').

Field name
Description

STSELEN
Length of this section

STSETYPE
Section type identifier of STSESEC

STSEMOD
Section type modifier of STSESMOD (X'0')

STSEFLG1
Security Section flag byte

Bit value
Description

STSE1ERR
Error obtaining verbose data (terse data returned)

STSE1JB
Token represents a job

STSEOFFS
Offset to SAF token

STSETOKN
Mapped SAF token

Job Queue Element Accounting Section: This section is mapped by the STATJQAC DSECT and is identified by a type of STACACCT and a modifier of STACAMOD (X'0').

Note: If the job does not have job accounting strings:

- In the case of JES2, the Job Information Element section will be truncated after the Job Queue Element Security section. There will be no Job Queue Element Accounting section.
- In the case of JES3, the Job Queue Element Accounting section will have the accounting length of 145, number of sub string zero and substring will contain all zeroes.

Field name
Description

STACLEN
Length of this section

STACTYPE
Section type identifier of STACACCT

STACMOD
Section type modifier of STACAMOD (X'0')

STACFLG1
Security Section flag byte

Bit value
Description

STAC1ERR
Error obtaining verbose data (terse data returned)

STAC1OVJB
Accounting string can be overlaid by other than originating node

STACOFFS
Offset to beginning of accounting information

STACFLEN
Length of fixed portion

SYSOUT information elements: When SYSOUT information is requested, for each SYSOUT element that matches specified filter requirements, a SYSOUT information element is added to the corresponding job level information element (STATJQ) chain pointed to by STJQSE. Each element is composed of the following:

- A variable-sized prefix (mapped by the STATSE DSECT)

- A fixed-size SYSOUT element header (mapped by the STATSEHD DSECT)
- One or more variable-sized data sections

SYSOUT Information Element Prefix: Each SYSOUT information element starts with a prefix area. This area is mapped by the STATSE DSECT in the IAZSSST macro. STJQSE of the corresponding job information element (STATJQ) points to the start of the first prefix area. Subsequent areas for the same job are chained using the STSEJNXT or SYSEJNXT_64 field. Because the size of the prefix area can vary as a result of service being applied, do not use the equate STSESIZE to access the data that follows the prefix. To obtain the address of subsequent fields, add the field STSEOHDR to the start of the prefix.

The fields in the STATSE prefix are:

Field Name	Description
STSEEYE	Eyecatcher C'SOUT'
STSEOHDR	Offset from the start of the STATSE to the first SYSOUT information data section.
STSEJNXT	31-bit address of the next STATSE area for this job.
STSEJNXT_64	64-bit address of the next STATSE area for this job.
STSEJOB	31-bit address of the STATJQ for the job that owns this SYSOUT.
STSEJOB_64	64-bit address of the STATJQ for the job that owns this SYSOUT.
STSEVRBO	31-bit address of the STATVO for the job that owns this SYSOUT.
STSEVRBO_64	64-bit address of the STATVO for the job that owns this SYSOUT.

SYSOUT Information Element Data Sections: The variable data sections which contain information about the SYSOUT follow the STATSE prefix. Each section starts with a 2-byte length, a 1-byte section type, and a 1-byte section modifier. The data length can be from 1 through 65535 bytes. The type and modifier are used to determine the mapping needed to access the data in the section. The first section after the STATSE prefix is a special 4-byte section which describes the length and type of all sections that follow. The DSECTs that map each section are in the IAZSSST macro.

SYSOUT Queue Element 1st Section: This section is mapped by the STATSEHD DSECT and is identified by a type of STSH1HDR ('40'x) and a modifier of STSH1MOD ('00'x). This is the only fixed-size section with a length of STSHSIZE (4 bytes). The length in this section is the total length of all sections that follow.

The fields in the STATSEHD section are:

Field Name
Description

STSHLEN
Length of all sections which follow (including this section)

STSHTYPE
Section type identifier of STSH1HDR ('40'x)

STSHMOD
Section type modifier of STSH1MOD ('00'x)

STSHSIZE
Length of this section (4 bytes)

SYSOUT Element JES2 Terse Section: This section is mapped by the STATSJ2T DSECT and is identified by a type of STS2TERS ('42'x) and a modifier of STS2TMOD ('00'x). This section is present if the SYSOUT information came from a JES2 subsystem. This section contains JES2-specific information common to all SYSOUT.

The fields in the STATSJ2T section are:

Field Name
Description

STS2LEN
Length of this section.

STS2TYPE
Section type identifier of STS2TERS ('42'x)

STS2MOD
Section type modifier of STS2TMOD ('00'x)

STS2FLG1
General flag byte

- **Bit Value**
  Description
- **STS21DSH**
  JOE representing this SYSOUT data set has been cloned
- **STS21TSO**
  JOE is available for TSO OUTPUT processing
- **STS21USR**
  SYSOUT element is on the user ID queue

STS2OGNM
JOE output group name

STS2CRTM
JOE create time (STCK format system clock time)

STS2RNOD
Binary destination node

STS2RRMT
Binary destination remote number

STS2RUSR
Destination user route code

STS2TSWB
JOE level SWB MTTR (8 byte field)

STS2CKPT
Checkpoint MTTR (8 byte) if checkpoint is valid (else zero)

STS2JOEI
Index of JOE

STS2OFSL
SPOOL offload selection mask

STS2BUSY
Binary busy byte

SYSOUT Element JES3 Terse Section: This section is mapped by the STATSJ3T DSECT. This section is meaningful only if the job is owned by a JES3 subsystem.

Field name	Description
STS3LEN	Length of this section
STS3TYPE	Section type identifier of
STS3MOD	Section type modifier of
STS3FLG1	Flag byte: **Bit value** — **Description** **STS31XSY** — Extended keywords used **STS31WSI** — Indicates that one SYSOUT element (STATSE) has been returned for the Work Selection Identifier in STS3WSI. The returned STATSE consolidates the information that would normally be returned in multiple SYSOUT elements with identical output characteristics. **STS31FMT** — Indicates that a //*FORMAT JCL statement was used to specify processing instructions to JES3 for the SYSOUT data set. The scheduler facilities call cannot be used to modify or obtain characteristics of the SYSOUT data set.
STS3WSI	The Work Selection Identifier assigned to each SYSOUT data set: • The identifier is a value assigned by JES3 based on the work selection output characteristics of a SYSOUT data set. • For a job, SYSOUT data sets with identical work selection output characteristics will be assigned the same value. • The assigned values are unique to the job and cannot be used across jobs.
STS3SIZE	Length of section

SYSOUT Element Terse Section: This section is mapped by the STATSETR DSECT and is identified by a type of STSTTERS ('41'x) and a modifier of STSTTMOD

('00'x). All job information elements have at least one section of this type. This section contains information common to all types of jobs.

The fields in the STATSETR section are:

Field Name
Description

STSTLEN
Length of this section.

STSTTYPE
Section type identifier of STSTTERS ('41'x)

STSTMOD
Section type modifier of STSTTMOD ('00'x)

STSTOUID
User ID that owns the SYSOUT

STSTSECL
SECLABEL assigned to the SYSOUT

STSTDEST
Destination of SYSOUT. Whether or not the local node name appears in the destination depends on the setting of the STAT1LCL option bit.

STSTCLAS
Class assigned to the SYSOUT. If JES3 is the subsystem returning information, and the data set has not been processed by output processing, this is the class of the first instance of the output.

STSTNREC
Number of records in the SYSOUT element

STSTPAGE
Number of pages in the SYSOUT element

STSTLNCT
Number of lines in the SYSOUT element (JES3 only)

STSTBYCT
Number of bytes on spool consumed by the SYSOUT element (JES3 only)

STSTFORM
Form assigned to the SYSOUT

STSTFCB
Forms control buffer (FCB)

STSTUCS
Universal character set (UCS)

STSTXWTR
External writer name

STSTPMDE
Processing mode (PRMODE)

STSTFLSH
Flash

STSTCHAR
Character sets assigned to the SYSOUT (JES3 only)

STSTMODF
MODIFY=(modname) value (JES3 only)

STSTMODC
MODIFY=(,trc) value (JES3 only)

STSTFLG2
General flag byte

Bit Value
Description

STST2CIV
The token in STSTCTKN cannot be used. It is not valid. Ensure that the token is valid by verifying that bit STST2CIV is ***not*** on.

STSTSYS
MVS system name where output currently being processed (blank if not currently active)

STSTMEM
JES member name where output currently being processed (blank if not currently active).

STSTDEVN
Device name on which output currently being processed (blank if not currently active)

STSTHSTA
Current hold status of the SYSOUT

Bit Value
Description

STSTHOPR
An operator hold has been set using an operator command

STSTHUSR
A user hold has been set using JCL (such as HOLD=YES on the DD statement)

STSTHSYS
A system (error) hold has been set (see STSTHRSN for hold reason)

STSTHTSO
SYSOUT is held for TSO (JES3 only)

STSTHXWT
SYSOUT is held for an external writer (JES3 only)

STSTHBDT
SYSOUT is held on the BDT queue (JES3 only)

STSTHTCP
SYSOUT is held on the TCP queue (JES3 only)

STSTHRSN
System hold reason (see fields OHLDJxxx in IAZOHLD for the definition of possible values)

STSTDISP
Current OUTDISP value for the SYSOUT (JES2 only)

Field Value
Description

STSTDHLD
OUTDISP=HOLD

STSTDLVE
OUTDISP=LEAVE

STSTDWRT
OUTDISP=WRITE

STSTDKEP
OUTDISP=KEEP

STSTFLG1
General flag byte

Bit Value
Description

STST1BRT
BURST=YES requested

STST1DSI
3540 held SYSOUT element

STST1IPA
SYSOUT destination includes an IP address

STST1CPD
SYSOUT element includes page mode data

STST1SPN
SYSOUT element was spun

STST1NSL
SYSOUT not selectable

STST1APC
SYSOUT has job level information (has a STOTAPPC type section)

STST1CTK
When SYSOUT was allocated, the DALRTCTK key was specified (client token returned)

STSTPRIO
Priority assigned to the SYSOUT

STSTSOID
EBDCIC SYSOUT identifier which can be used in operator commands for this SYSOUT element. The contents of this field are subsystem dependent and can change from one release to another.

STSTCTKN
SYSOUT token associated with the SYSOUT element. This token can be passed on subsequent extended status requests or on the SYSOUT API (SAPI). This token may be different that the SYSOUT token returned by dynamic allocation.

Using STSTCTKN

You may receive multiple tokens for a set of data sets meeting your status selection criteria. This is based on how the JES groups data sets into schedulable elements and may be different for each JES.

For example, if your status request specifies FORMS as the only selection criterion, you may still receive multiple tokens for a single job because other characteristics may vary or because of the way JES decided to group the data sets under a single schedulable element.

The Extended Status token will return the same group of data sets on a subsequent SAPI call unless:

- The JES was restarted
- Some of the output was modified such that a new schedulable element was created in place of an existing one
- The schedulable element was either deleted by the operator or it was processed by another application or writer

Therefore, it is possible that you will receive SSS2EODS for what otherwise would be a valid token request. To make sure there are no data sets left in JES that meet your selection criteria, you should repeat a status request, examine the results, and issue another SAPI request until you get an output group for a different job. You can then continue with that job or issue a PUT for the received group with the KEEP disposition to return it back to the queue for some other output function to process.

STS1APC
SYSOUT data set has APPC JOB information associated with it

SYSOUT Verbose Element Prefix:

Field name	**Description**
STVOEYE	Eye catcher (C'SSVE')
STVOOHDR	Offset to first section
STVOJOB	31-bit address of associated job queue data element - STATJQ
STVOJOB_64	64-bit address of associated job queue data element - STATJQ
STVOJNXT	31-bit address of next verbose SYSOUT element for JOB
STVOJNXT_64	64-bit address of next verbose SYSOUT element for JOB
STVOSOUT	31-bit address of associated SYSOUT data element - STATSE
STVOSOUT_64	64-bit address of associated SYSOUT data element - STATSE
STVOSNXT	31-bit address of next verbose SYSOUT element for STATSE
STVOSNXT_64	64-bit address of next verbose SYSOUT element for STATSE
STVOSIZE	Size of prefix

SYSOUT Verbose Element 1st Header Section: This section is mapped by the STATSVHD DSECT and is identified by a type of STSV1HDR and a modifier of STSV1MOD (X'0').

Field name
Description

STSVLEN
Length of entire SYSOUT verbose element (Maximum value is 65535)

STSVYPE
Section type identifier of STSV1HDR

STSVMOD
Section type modifier of STSV1MOD (X'0')

STSVSIZE
Size of 1st Header Section

SYSOUT Element Verbose Section: This section is mapped by the STATSEVB DSECT and is identified by a type of STVSVRBO and a modifier of STVSVMOD (X'0').

Field name
Description

STVSLEN
Length of this section

STVSYPE
Section type identifier of STVSVRBO

STVSMOD
Section type modifier of STVSVMOD (X'0')

STVSFLG1
Section flag byte

Bit value
Description

STVS1ERR
Error obtaining verbose data (terse section returned).

STVSDSCL
Line count, page count, byte count, and record count (STVSLNCT, STVSPGCT, STVSBYCT, and STVSRCCT) are accurate. This bit will not be on if there was an abnormal termination or the data was created on a different node.

STVS1SPN
SPIN data set

STSVS1JSL
Spun JESLOG data set

STVS1SYS
System data set

STVS1SIN
Instream data set (SYSIN)

STVS1DUM
Dummy data set (SYSOUT data set which will not print)

STVS1ENF
All ENF signals are issued for this data set

STVSRECF
Record format

STVSPRCD
Procname for the step creating this data set

STVSSTPD
Stepname for the step creating this data set

STVSDDND
DDNAME for the data set creation

STVSTJN
APPC Transaction Program Jobname that created this data set. This field has been deprecated. Applications should use STOTJOBN in the STATSEOT section.

STVSTJID
APPC Transaction Program Job ID that created this data set. This field has been deprecated . Applications should use STOTJID in the STATSEOT section.

STVSTOD
Date and time of data set availability in TOD format (that is, this value is the high-order word of the TOD clock obtained with a STCK instruction)

STVSSEGM
Segment ID (zero if data set not segmented)

STVSDSKY
Data set number (key)

STVSMLRL
Maximum logical record length (LRECL)

STVSLNCT
Line count (valid only if STVSDSCL is ON in STVSFLG1)

Note: For JES3, the line, page, byte, and record counts (STVSLNCT, STSVPGCT, STSVBYCT, STSVRCCT) are updated when the data set is unallocated. Prior to then, the returned values, though valid, are not current.

STVSPGCT
Page count (valid only if STVSDSCL is ON in STVSFLG1)

STVSBYCT
Byte count after blank truncation, 63 bit right justified (valid only if STVSDSCL is ON in STVSFLG1)

STVSRCCT
Record count (JES3 only) (valid only if STVSDSCL is ON in STVSFLG1)

STVSDSN
SYSOUT data set name (valid only if STVSDSCL is ON in STVSFLG1)

STVSCOPY
Data set copy count

STVSFLSC
Number of flash copies

STVSCTKN
SYSOUT data set token

STVSCHAR
Printer translate table

STVSMODF
MODIFY=(modname)

STVSMODC
MODIFY=(,trc)

STVSSIZE
Length of section

SYSOUT Element JES2 Verbose Section: This section is mapped by the STATSEO2 DSECT and is identified by a type of STO2VRBO and a modifier of STO2TMOD. This section contains general information that is meaningful only if the job is owned by a JES2 subsystem.

Field name
Description

STO2LEN
Length of this section

STO2TYPE
Section type identifier of STO2VRBO

STO2MOD
Section type modifier of STO2TMOD (X'0')

STO2FLG1
General flags

Bit value
Description

STO21ERR
Error obtaining verbose data

STO21ORI
Field override section is populated (JES2 only).

Note: JES3 does not use this field override section.

STO2SPST
Data set SPOOL data token

Field Override Section: The following fields are populated if the data set is part of a *demand select* JOE. A demand select JOE is indicated by the flag **STO21ORI** being set to **on**. If the system or an individual job specifies demand select, then data sets are gathered into JOEs, regardless of whether the following list of characteristics are matching or not:

- Forms
- FCB
- UCS
- Flash
- Burst

STO2FORM
Form assigned to the data set

STO2FCB
Forms Control Buffer (FCB)

STO2UCS
Universal Character Set (UCS)

STO2FLSH
Flash

STO2FLG2
General flags

Bit value
Description

STO21BRT
Indicates BURST=YES

STO2SIZE
Length of section

SYSOUT Element JES3 Verbose Section: This section is mapped by the STATSEO3 DSECT and is identified by a type of STO3VRBO and a modifier of STO3TMOD. This section contains general information that is meaningful only if the job is owned by a JES3 subsystem.

Field name
Description

STO3LEN
Length of this section

STO3TYPE
Section type identifier of STO3VRBO

STO3MOD
Section type modifier of STO3TMOD (X'0')

STO3FLG1
General flags

Bit value
Description

STO31ERR
Error obtaining verbose data

STO3CMTK
Modify token which can be included on a *MODIFY,U operator command to uniquely identify the data set

STO3SIZE
Length of section

SYSOUT Element Security Section (mapped by SAF token): This section is mapped by the STATSESO DSECT and is identified by a type of STSOSEC and a modifier of STSOSMOD (X'0').

Field name
Description

STSOLEN
Length of this section

STSOTYPE
Section type identifier of STSOSEC

STSOMOD
Section type modifier of STSOSMOD (X'0')

Field name
Description

STSOSMOD
Security section modifier

STSOFLG1
flag byte

Bit value
Description

STSO1ERR
Error obtaining verbose data

STSOOFFS
Offset to SAF token

STSOTOKN
Mapped SAF token

SYSOUT APPC transaction output section, (mapped by STATEOT DSECT): This section is mapped by the STATSEOT DSECT and is identified by a type of STOTAPPC and a modifier of STOTSMOD.

Field name
Description

STOTJOBN
APPC transaction program job name that created this data set

STOTJID
APPC transaction program job id that created this data set

STOTSTRT
APPC entry start time

STOTSTRD
APPC entry start date

STOTEXST
APPC execution start time

STOTACTO
APPC account number

STOTSIZE
Length of section

JES3 Unsupported Flags and Fields

Table 8 summarizes which flags and fields are not supported by JES3.

Table 8. JES3 Unsupported Flags and Fields

Flagname	Fieldname	Description
STATSOJI	STATOJBI	Original job ID
STATSVOL	STATVOL	List of SPOOL volume serial numbers
STATSMEM	STATMEMB	JES member name where job is active
STATSORG	STATORGN	Origin node name for selection
STATSXEQ	STSTXEQN	Execution node name for selection

Text lookup service (IAZTLKUP)

For each job that matches specified filter requirements, an information element is added to the chain pointed to by STATJOBF. There are some fields defined in the sections of the job information element that can be further processed.

The STTRPHAZ field is reported within the Job Queue Element Terse Section, and contains a code that identifies the current phase of the job. Job phase codes are documented under the STATPHAZ field. Applications that display information retrieved using SSI 80 can display text to the end user. Rather than have applications interpret the job phase code, the text lookup service (IAZTLKUP) provides text that is equivalent to the code.

The IAZTLKUP text lookup service enables the user to supply extended status SSI 80 information to the service and retrieve a text description for specific fields. The service supports interpreting the job phase code and job delay reasons, which are reported in the Job Queue Element Execution Scheduling section (STATSCHD) flag bytes STSCAHLD and STSCAHL2. Refer to “Job queue element sections” on page 220. The application can perform an extended status SSI 80 call and then invoke the IAZTLKUP text lookup service to retrieve a text description for the job phase code or any job delay reasons for a given job information element.

IAZTLKUP also provides the capability of returning different levels of text for a given code. This provides the capability to report different amounts of detail and information for a given code or a given delay reason. The text lookup tables provide JES-specific text, and also a generalized text description: the macro invoker indicates which level of text to return. The IAZTLKUP macro documents the text levels that are supported by each text table.

Text lookup for flag bytes such as the job delay reasons work slightly differently that the simple lookup for a job phase code, because there can be multiple reasons for a job execution delay. The text lookup service return the text for the first job delay reason that is encountered, indicating to the macro invoker if there are more job delay reasons to interpret. You can invoke the IAZTLKUP text lookup service in a loop to receive all job delay reasons for a given job information element.

Text lookup (IAZTLKUP) macro

The interface to the text lookup service is the IAZTLKUP macro. The service requires a parameter list which is filled in by the expanded macro code. This parameter list is mapped by the IAZTLKDF macro. The IAZTLKUP text lookup service can interpret the following fields and return equivalent text information:

- Job phase code (STTRPHAZ)
- Job delay reasons (STSCAHLD and STSCAHL2)

IAZTLKUP syntax

The IAZTLKUP macro uses the following syntax:

```
IAZTLKUP TABLEID=tableid,
 LEVEL=level,
 SSOB=ssob,
 DATASTR=datastr,
 OUTAREA=outarea,
 OUTLEN=outlen,
 MOREFLG=moreflg,
 MF=(E,parmlist)
```

tableid Specifies the 3 character ID of the type of lookup to perform. Supported types are:

- **PHZ** Job phase code lookup.
- **DLY** Job delay reasons lookup.

level Indicates the level of text to be returned:

- **1** JES-specific text.
- **2** Generalized text description.
- **3** SDSF text description. Only supported by the PHZ table.

ssob Specifies the address of the SSOB parameter list used in the Extended Status SSI 80 request to select the job information element being interpreted, which is supplied in the DATASTR parameter.

datastr Specifies the address of the data structure containing the fields to be interpreted by the service. Extended Status SSI 80 can return data for numerous jobs, so the text lookup service requires the job information element to extract data from for the lookup. For a job phase code lookup, supply the address of a job information element (STATJQ), or the job queue element terse section (STATJQTR) within a job information element. For job delay reason lookup, supply STATJQ or the Job Queue Element Execution Scheduling section (STATSCHD) within a job information element. Refer to "Job queue element sections" on page 220.

outarea Specifies the address of the storage location for the text lookup service to place the text derived from the lookup. If the size of the output area is smaller than the derived text, the text will be truncated. If the output area is larger than the derived text, the remaining bytes will be filled with blanks.

outlen Specifies the length of the supplied output area for the derived text. If this parameter is not supplied, the service will use the length of OUTAREA.

moreflg Specifies the address of the 4-byte storage location where remaining flag reason bits can be stored between IAZTLKUP macro invocations. This parameter is used for flag byte text lookup such as the job delay reasons. Set the MOREFLG location to 0 prior to the first invocation. After the first invocation, a return code of 4 indicates that more flag bits are available for interpretation. A return code of 0 indicates the last flag bit, if any, has been processed. If no flag bits are returned on the first invocation of IAZTLKUP, a return code of 0 and blanks in OUTAREA results.

If MOREFLG is not specified, the service only returns the first flag bit reason. If the service is invoked in a loop without MOREFLG specified, the result can be an infinite loop.

If MOREFLG is specified but not set to zero prior to the first IAZTLKUP macro invocation, the results are unpredictable.

MF Indicator for macro execution:

- **L** Allocates storage for the TLKUP DSECT that is used as the input parameter list to the IAZTLKUP service. Allocates an additional 256 bytes to be used as a work area by the IAZTLKUP service. MF must be invoked once with this indicator to set aside storage for the parameter list.
- **E** Generates the call to the IAZTLKUP service. Requires the list form (L) to have been previously specified.

Parmlist
Label used to reference the input parameter list TLKUP that is passed to the IAZTLKUP service.

Input register information

The IAZTLKUP service requires a non-standard save area address in register 13. This save area must be 128 bytes to allow the IAZTLKUP service to save the 16 8-byte registers.

If the lookup being performed is a flag bit lookup (such as job delay reasons) including the MOREFLG parameter, MOREFLG must be set to zero before the first invocation of the IAZTLKUP service, or unpredictable results can occur.

Output register information

The IAZTLKUP service affects the registers in the following manner after exiting the macro:

Register	**Content**
R0/AR0	Destroyed. R0 is used as a work register.
R1/AR1	Destroyed. R1 is used as a work register.
R2-R13	Unchanged.
R14	Destroyed. Used as a return address.
R15/AR15	Destroyed. R15 contains a return code.

Return code information

The IAZTLKUP service supplies a return code in register 15 after exit. The following return codes are possible:

Return Code	**Meaning and Results**
0	The IAZTLKUP service was called successfully. For a flag bit lookup (such as job delay reasons), this indicates the last reason was interpreted. If no flag bit settings are found, OUTAREA contains blanks. If the code is not defined in the text lookup table, default text is returned in OUTAREA. For example, an unknown job phase code returns “UNKNOWN JOB PHASE”.
4	The IAZTLKUP service was called successfully for a flag bit interpretation (such as job delay reasons), and more flag bits remain to be interpreted.
8	No text value was returned. Check the parameter list field TLKRETCD for further information on the error.

Environment

Minimum Authorization: Problem or Supervisor state, with any PSW key

Dispatchable unit mode: Task

Cross Memory Mode: PASN=HASN=SASN

AMODE: 31 or 64 bit

ASC mode: Primary

Locks: none

Restrictions

None.

Text lookup service data definition (IAZTLKDF) macro

The Text Lookup Service data definition macro IAZTLKDF is used to map the input parameter list passed to the IAZTLKUP text lookup service. The TLKUP DSECT defines the service's input parameter list. The IAZTLKDF macro is invoked in the following manner:

IAZTLKDF DSECT=YES | NO
Input parameter list definition:

DSECT=YES
Generates a DSECT statement for the parameter list structure.

DSECT=NO
Does not generate a DSECT statement, and can be used to reserve storage for the parameter list in an existing DSECT.

IAZTLKDF parameter list return codes (TLKRETCD)

The following text lookup service data definition return codes are provided:

Name	Meaning
TLKRSUCC	Successful completion. For a flag lookup, no additional text is available.
TLKRLAST	Successful completion. For a flag lookup, additional text is available.
TLKRNOTF	Code/flag setting not found.
TLKRNTBL	No text table pointer in SSI output area.
TLKRBADS	Bad SSOB address, SSI function not supported, or bad SSI parameter list.
TLKRBADT	Bad text table ID.
TLKRNOUT	Output area address or length is zeroes.
TLKRBADE	Bad text table eyecatcher.
TLKRBADL	Bad text table level requested.

TLKRBADY
Bad text table type for request.

IAZTLKUP service input parameter list (TLKUP)

The TLKUP data structure is the input parameter list to the IAZTLKUP text lookup service. It is built by the code expanded by the expansion of the IAZTLKUP text lookup service macro. The parameter list fields are:

Field name	Description
TLKEYE	Eyecatcher.
TLKLEN	Length of TLKUP parameter list.
TLKTBLID	Text table ID used in the lookup.
TLKLEVEL	Level of text to lookup.
TLKSSOBP	Address of the SSOB.
TLKDATAP	Address of the SSI 80 output data where the code or flag to be interpreted is located (8 byte version).
TLKDATA4	Address of the SSI 80 output data where the code or flag to be interpreted is located (4 byte version).
TLKOUTP	Address of the output area where text is returned (8 byte version).
TLKOUT4	Address of the output area where text is returned (4 byte version).
TLKOUTL	Output area length.
TLKRETCD	Overall return code.

Length of text supplied

The text tables used by the IAZTLKUP text lookup service are defined within the JES at initialization time. The definitions supply the length of text that can be provided for each text level that is requested. Constants are declared in the Text Lookup Service data definition macro IAZTLKDF to identify the size of text that can be returned by the text lookup service. Current sizes are:

Table 9. Job phase text level

Job phase text level	IAZTLKDF constant name	Text size
Level 1	TPHZLEN1	64 characters
Level 2	TPHZLEN2	64 characters
Level 3	TPHZLEN3	20 characters

Table 10. Job phase text level

Job delay text level	IAZTLKDF constant name	Text size
Level 1	TDLYLEN1	20 characters
Level 2	TDLYLEN2	64 characters

Example

The following is a coded example of a program that generates an extended status function call (SSI function code 80).

This program is reentrant and must run in an authorized library.

```
STATUS2  TITLE 'Sample expanded status SSI call'
STATUS2  CSECT ,
STATUS2  AMODE 31
STATUS2  RMODE ANY

         USING STATWORK,R10        Est work area addressability
         USING STATMAIN,R12        Est base addressability

STATMAIB STM   R14,R12,12(R13)     Save callers registers
         LR    R12,R15             Set base register
         LR    R8,R1               Save CPPL address

         STORAGE OBTAIN,LENGTH=STATWLEN,ADDR=(R10),LOC=ANY             C
                                   Obtain local work area

         LR    R0,R10              Zero the
         LA    R1,STATWLEN           work area
         SLR   R15,R15                 that was
         MVCL  R0,R14                    just obtained

         ST    R13,SAVEAREA+4      Chain
         LA    R15,SAVEAREA          in
         ST    R15,8(R13)              new
         LR    R13,R15                    save area

***********************************************************************
*        Determine the local userid                                   *
***********************************************************************

         IAZXJSAB READ,USERID=THISUSER  Get execution user ID

***********************************************************************
*        Set up basic extended status SSOB                            *
***********************************************************************

         USING SSOB,STSSOB         Est SSOB addressability

         LA    R0,STSSOB           Ensure that
         LA    R1,L'STSSOB           the SSOB
         SLR   R15,R15                 area is
         MVCL  R0,R14                    all zero

         MVC   SSOBID,=C'SSOB'     Set SSOB eyecatcher
         MVC   SSOBLEN,=Y(SSOBHSIZ)  Set length of SSOB header
         MVC   SSOBFUNC,=Y(SSOBESTA)  Set status 2 function code
         MVC   SSOBSSIB,=F'0'      Use LOJ SSIB
         LA    R0,SSOB+SSOBHSIZ    Point to STAT extension
         ST    R0,SSOBINDV         Point base to extension

         USING STAT,SSOB+SSOBHSIZ  Est STAT extension addr'blty

         MVC   STATEYE,=C'STAT'    Move in the eyecatcher
         MVC   STATLEN,=Y(STATSIZE)  Set length of extension
         MVC   STATVER,=AL1(STATCVRL,STATCVRM) Set current version
         MVI   STATTYPE,STATTERS   Set terse data request

***********************************************************************
*        Make only filter this userid                                 *
***********************************************************************

         OI    STATSEL1,STATSOWN   Indicate OWNER is a filter
         LA    R0,STATOWNR         Get area in STAT
         LA    R1,L'STATOWNR         and length
         LA    R14,THISUSER        Get this userid
         LA    R15,L'THISUSER        and length
         ICM   R15,B'1000',=C' '   Pad with blanks
         MVCL  R0,R14              Copy parm to STAT

***********************************************************************
*        Call the subsystem                                           *
***********************************************************************

         MODESET MODE=SUP          Supervisor state for SSI function

         LA    R1,STSSOB           Get SSOB address
         O     R1,=X'80000000'     Indicate last SSOB
         ST    R1,PARMPTR          Set parm pointer
         LA    R1,PARMPTR          Get R1 for IEFSSREQ
         IEFSSREQ                  Issue extended status SSI call
         LTR   R15,R15             Any SSI errors?
         BNZ   SSREQERX              Yes, go process errors

         MODESET MODE=PROB         Return to problem program state

***********************************************************************
*        Process results for IEFSSREQ here                            *
***********************************************************************

         USING STATJQ,R4           Est STATJQ addressability

         LA    R4,STATJOBF-(STJQNEXT-STATJQ)  Get 0th STATJQ
LOOPSTJQ ICM   R4,B'1111',STJQNEXT Get next area
         BZ    DONESTJQ              No more, done with STATJQs
         LH    R3,STJQOHDR         Get length of STATJQ
         LA    R5,STATJQ(R3)       Point to 1st section
         SLR   R2,R2                           Get total
         ICM   R2,B'0011',STHDLEN-STATJQHD(R5)   Header length
         LA    R5,STHDSIZE(R5)     Point to 1st variable section
         SL    R2,=A(STHDSIZE)     Decriment for 1st header length

LOOPSECT CLC   2(2,R5),=AL1(STTRTERS,STTRTMOD)  Terse section?
         BNE   NOTTERSE              No, check next type

         USING STATJQTR,R5         Est Terse section addr'blty
*        Process terse section data
         DROP  R5                  Drop terse section
         B     NEXTSECT            Go process next section

NOTTERSE CLC   2(2,R5),=AL1(STJ2TERS,STJ2TMOD)  JES2 section?
         BNE   NOTJES2               No, check next type

         USING STATJ2TR,R5         Est JES2 section addr'blty
*        Process JES2 section data
         DROP  R5                  Drop JES2 section

         B     NEXTSECT            Go process next section

NOTJES2  CLC   2(2,R5),=AL1(STAFFIN,STAFTMOD)  Affinity section?
         BNE   NEXTSECT              Not known, get next section
         USING STATAFFS,R5         Est Affinity section addr'blty
*        Process JES2 section data
         DROP  R5                  Drop Affinity section

NEXTSECT SLR   R15,R15             Get length of
         ICM   R15,B'0011',0(R5)     current section
         SR    R2,R15              Decrement total count
         BNP   LOOPSTJQ              None left, loop
         ALR   R5,R15              Point to next section
         B     LOOPSECT            Loop for all sections

DONESTJQ DS    0H                  Done processing all elements

***********************************************************************
*        Return data area passed                                      *
***********************************************************************

         MODESET MODE=SUP          Supervisor state for SSI function

         MVI   STATTYPE,STATMEM    Set memory management call

         LA    R1,STSSOB           Get SSOB address
         O     R1,=X'80000000'     Indicate last SSOB
         ST    R1,PARMPTR          Set parm pointer
         LA    R1,PARMPTR          Get R1 for IEFSSREQ

         IEFSSREQ                  Issue extended status SSI call

         MODESET MODE=PROB         Return to problem program state
         B     EXIT                Go exit the command processor

SSREQERX LR    R2,R15              Save return code
         MODESET MODE=PROB         Return to problem program state
         LR    R15,R2              Restore return code
         B     SSREQERR            Go process error
***********************************************************************
*        Process IEFSSREQ error return codes                          *
***********************************************************************

         USING GFDSECTD,R1         Est general failure parm list

SSREQERR LA    R1,FAILPARM         Get address of fail parm area
         ST    R1,PARMPTR          Save in pointer word

         ST    R15,GFRCODE         Save IEFSSREQ return code
         MVC   GFCALLID,=Y(GFSSREQ)  Indicate IEFSSREQ error
         ST    R8,GFCPPLP          Save CPPL pointer addr
         MVC   ECBADS,=F'0'        Zero ECB address
         LA    R0,ECBADS           Set ECB address
         ST    R0,GFECBP             into the PPL

         LA    R1,PARMPTR          Get addr of parm pointer
         LINK  EP=IKJEFF19         Call TSO GNRLFAIL service

         B     EXIT                Return to caller

         DROP  R1                  Drop GFDSECTD

***********************************************************************
*        Return to the caller                                         *
***********************************************************************

EXIT     L     R13,SAVEAREA+4      Get callers save area

         STORAGE RELEASE,LENGTH=STATWLEN,ADDR=(R10)                    C
                                   Return local work area
         L     R14,12(R13)         Restore callers
         LM    R0,R12,20(R13)        registers
         SLR   R15,R15             Set a zero return code
         BR    R14                 Return to caller

         DROP  R10,R12             Drop STATWORK, Local

         LTORG ,
***********************************************************************
*        Work area DSECT                                              *
***********************************************************************

STATWORK DSECT ,
SAVEAREA DS    18F                 Save area

THISUSER DS    CL8                 This user ID

PARMPTR  DS    A                   Pointer for MVS calls

ECBADS   DS    F                   CMD processor ECB

FAILPARM DS    XL(GFLENGF)         Parm area for GNRLFAIL

STSSOB   DS    XL(SSSTLEN8)        Enhanced status SSOB

STATWLEN EQU   *-STATWORK          Length of local storage area

***********************************************************************
*        Equates                                                      *
***********************************************************************

R0       EQU   0
R1       EQU   1
R2       EQU   2
R3       EQU   3
R4       EQU   4
R5       EQU   5
R6       EQU   6
R7       EQU   7
R8       EQU   8
R9       EQU   9
R10      EQU   10
R11      EQU   11
R12      EQU   12
R13      EQU   13
R14      EQU   14
R15      EQU   15
***********************************************************************
*        TSO and MVS DSECTs                                           *
***********************************************************************

         IKJEFFGF GFDSECT=YES
         IEFJESCT ,
         IEFJSSOB ,
         IAZSSST DSECT=YES
         IAZJSAB ,
         IHAPSA ,
         IHAASCB ,
         IHAASSB ,
         IKJTCB ,
         IHASTCB ,
         CVT   DSECT=YES

STATUS2  CSECT ,
         END   ,
```

JES Properties — SSI Function Code 82

The JES property information services (SSI function code 82) allow a user-supplied program to obtain information about JES managed structures such as NJE nodes, SPOOL volumes, initiators, members in the JESPLEX, and job classes.

JES Property Information Services Request Types

Table 11. JES Properties Request Types

Request Type	Function (SSJPFREQ)	Request Data Area Pointer (SSJPUSER)
"NJE Node Information"	SSJPNJOD/SSJPNJRS	IAZJPNJN
"SPOOL Volume Information" on page 269	SSJPSPOD/SSJPSPRS	IAZJPSPL
"Initiator Information" on page 289	SSJPITOD/SSJPITRS	IAZJPITD
"JESPLEX Information" on page 308	SSJPJXOD/SSJPJXRS	IAZJPLEX
"Job Class Information" on page 324	SSJPJCOD/SSJPJCRS	IAZJPCLS

NJE Node Information

The NJE Node Information service provides information about JES Network Job Entry (NJE) nodes. Information can be obtained on all NJE nodes or filters can be supplied to limit which nodes are returned. Information is returned as a chained list of data areas and each data area represents an NJE node.

See the following sections for more information about NJE Node Information:
- "Type of Request"
- "Use Information"
- "Issued to"
- "Related SSI Codes"
- "Related Concepts"
- "Environment" on page 251
- "Input Register Information" on page 252
- "Input Parameters" on page 252
- "Output Register Information" on page 257
- "Return Code Information" on page 257
- "Output Parameters" on page 257

Type of Request: Directed SSI Call.

Use Information: To use the JES property information services SSI, callers must first decide the function they want to perform. The appropriate parameter list must be obtained and pointed to by SSJPUSER.

Issued to: A JES subsystem (either primary or secondary). The subsystem does not have to be associated with the requesting address space.

Related SSI Codes: None.

Related Concepts: None.

Environment: The caller (issuer of the IEFSSREQ macro) must include the following mapping macros:

- CVT
- IEFJESCT

Data areas that are commonly referenced are mapped by the following mapping macros:

- IEFSSOBH
- IEFJSSIB
- IAZSSJP
- IAZJPNJN (NJE Node Information)

The caller must meet the following requirements:

Caller variable	Caller value
Minimum Authorization	Problem state, any PSW key
Dispatchable unit mode	Task
AMODE	24-bit or 31-bit
Cross memory mode	PASN=HASN=SASN
ASC mode	Primary
Interrupt status	Enabled for I/O and external interrupts
Locks	No locks held
Control Parameters	The SSOB, SSIB, IAZSSJP, and IAZJPNJN, control blocks can reside in 24- or 31-bit virtual storage
Recovery	The caller should provide an ESTAE-type recovery environment. See *z/OS MVS Programming: Assembler Services Guide* for more information about an ESTAE-type recovery environment.

Figure 23 on page 252 shows the environment at the time of the call for SSI function code 82, NJE Node Information Subfunction.

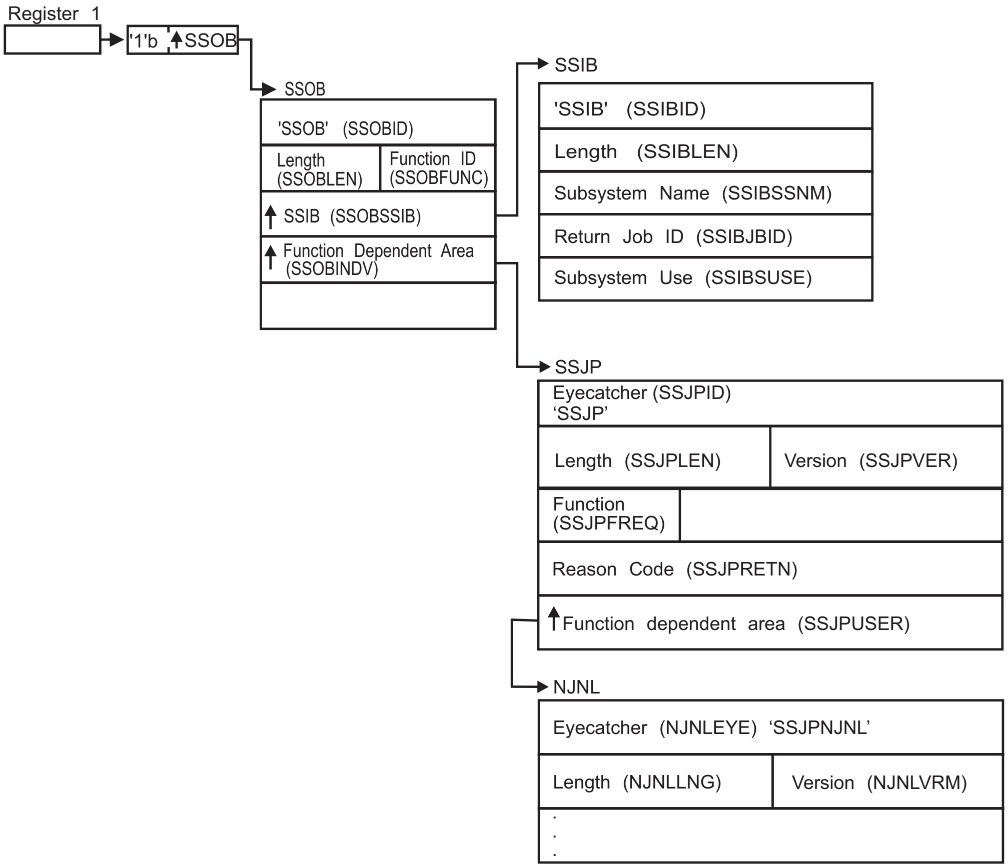
Register 1
'1'b
SSOB
SSOB
'SSOB' (SSOBID)
Length (SSOBLEN)
Function ID (SSOBFUNC)
SSIB (SSOBSSIB)
Function Dependent Area (SSOBINDV)
SSIB
'SSIB' (SSIBID)
Length (SSIBLEN)
Subsystem Name (SSIBSSNM)
Return Job ID (SSIBJBID)
Subsystem Use (SSIBSUSE)
SSJP
Eyecatcher (SSJPID) 'SSJP'
Length (SSJPLEN)
Version (SSJPVER)
Function (SSJPFREQ)
Reason Code (SSJPRETN)
Function dependent area (SSJPUSER)
NJNL
Eyecatcher (NJNLEYE) 'SSJPNJNL'
Length (NJNLLNG)
Version (NJNLVRM)

Figure 23. Environment at Time of Call for SSI Function Code 82, NJE Node Information Subfunction

Input Register Information: Before issuing the IEFSSREQ macro, the caller must ensure that the following general purpose registers contain:

Register	**Contents**
1	Address of a 1-word parameter list that has the high-order bit on and a pointer to the SSOB control block in the low-order 31 bits.
13	Address of a standard 18-word save area.

Input Parameters: Input parameters for the function routine are:

- SSOB
- SSIB
- IAZSSJP
- IAZJPNJN (NJE Node Information)

SSOB Contents: The caller sets the following fields in the SSOB control block on input:

Field Name	**Description**
SSOBID	Identifier 'SSOB'

SSOBLEN
Length of the SSOB (SSOBHSIZ) control block

SSOBFUNC
SSI function code 82(SSOBSSJP)

SSOBSSIB
Address of the SSIB control block or zero (if this field is zero, the life-of-job SSIB is used). See “Subsystem Identification Block (SSIB)” on page 8 for more information about the life-of-job SSIB.

SSOBINDV
Address of the function-dependent area (IAZSSJP control block)

Set all other fields in the SSOB control block to binary zeros before issuing the IEFSSREQ macro.

SSIB Contents: If you do not use the life-of-job SSIB, the caller must provide an SSIB and set the following fields in the SSIB control block on input:

Field Name	Description
SSIBID	Identifier 'SSIB'
SSIBLEN	Length of the SSIB (SSIBSIZE) control block
SSIBSSNM	Subsystem name: name of the subsystem to which this NJE Node Information Services request is directed

Set all other fields in the SSIB control block to binary zeros before issuing the IEFSSREQ macro.

IAZSSJP Contents: The caller must set the following fields in the IAZSSJP control block on input:

Field Name
Description

SSJPID
Eyecatcher for the control block (set to 'SSJP')

SSJPLEN
Length of the IAZSSJP (SSJPSIZE) control block

SSJPVER
Input version of the IAZSSJP control block. Set to SSJPVER1 for version 1 of the control block or to SSJPVERC for the current version of the control block.

SSJPFREQ
Function to be performed on this request. Valid functions and the related SSJIUSER area are:

Field Value	SSJPUSER Description
SSJPNJOD	IAZJPNJN NJE Node Information service, obtain data

SSJPNJRS
IAZJPNJN NJE Node Information service, release storage

SSJPUSER
Pointer to service specific data area '(IAZJPNJN)'

Set all other fields in the IAZSSJP control block to binary zeros before issuing the IEFSSREQ macro.

NJE Node Information service, IAZJPNJN contents: For the NJE Node Information service (function code SSJPNJOD), the caller must set the following fields in the IAZJPNJN control block:

Field Name	Description
NJNLEYE	Eyecatcher of the control block (set to ' SSJPNJNL ').
NJNLLNG	Length of the IAZJPNJN (NJNLSIZE) control block.
NJNLVRM	Input version of the IAZJPNJN control block. Set to NJNLVRM1 for version 1 of the control block. Set to NJNLVRMC for the current (latest) version.
NJNLOPT1	Processing options: **Bit Value** — **Description** **NJNLODMC** — Perform security label dominance check. This check is always performed for non-authorized callers (JES2 Only).
NJNLSTRP	Storage management anchor for use by the subsystem that responds to this request. It is expected that the caller sets this field to zero the first time IAZJPNJN is used and from that point on the field is managed by the subsystem.

The caller can also set the following fields in the IAZJPNJN control block on input to limit (or select) which data is returned. If no filters are specified, all data is returned. If any filters are specified, at least one of the filter conditions in each of the separate filters must be matched before data is returned.

An implicit OR is performed between filters that apply to the same node attribute. For example, if both NJNL1SSG and NJNL1CSG are selected, SSI returns NJE nodes that are defined with compatible signon in addition to NJE nodes that are defined with a secure signon.

An implicit AND is performed between filters that apply to the different node attributes. For example, if both NJNL1NAM and NJNL1SNA filters are selected, SSI returns NJE nodes with the names that match NJNLNOD1 field and which are at the same time connected through SNA protocol.

If a filter is not recognized or does not apply, it does not have an impact on the result of the SSI call. For example, JES3-only filters do not have impact on SSI output from JES2.

Field Name
  Description

NJNLFLT1
  Filter by node attributes:

  Bit Value
    Description

  NJNL1NAM
    Select by the node name specified in NJNLNOD1

  NJNL1RNG
    Select by a range of node numbers specified in NJNLRNGL and NJNLRNGH (JES2 Only)

  NJNL1SSG
    Select nodes with a secure signon

  NJNL1CSG
    Select nodes with a compatible signon

  NJNL1NET
    Select by the subnet name specified in NJNLSUBN (JES2 only)

  NJNL1SNA
    Select nodes using the SNA protocol (JES3 Only)

  NJNL1BSC
    Select nodes using the BSC protocol (JES3 Only)

  NJNL1TCP
    Select nodes using the TCP protocol (JES3 Only)

NJNLFLT2
  Filter by node attributes:

  Bit Value
    Description

  NJNL2PMY
    Select nodes managed by path manager (JES2 Only)

  NJNL2PMN
    Select nodes not managed by path manager (JES2 Only)

  NJNL2TLS
    Select nodes using secure sockets (JES3 Only)

NJNLFLTC
  Filter by connection status:

  Bit Value
    Description

  NJNLCOWN
    Select only the own node (JES2) or the home node (JES3). This filter should not be used with any other connection filter.

  NJNLCADJ
    Select adjacent nodes. An adjacent node is one hop away from the own (local) node.

NJNLCDIR
Select directly attached nodes. Directly attached nodes are adjacent nodes that use dedicated lines.

NJNLCCNC
Select connected nodes. A connected node is one that JES can communicate with in order to send data.

NJNLCNCN
Select not-connected nodes. A not-connected node is configured, but JES is unable to communicate with it.

NJNLCPDN
Select nodes pending connection.

NJNLCVIA
Select nodes connected with the adjacent node that is specified in NJNLNOD2.

NJNLFLTA
Filter by node authority (JES2 Only):

Bit Value
Description

NJNLADCY
Select nodes with authority to device commands

NJNLADCN
Select nodes without authority to device commands

NJNLAJCY
Select nodes with authority to job commands

NJNLAJCN
Select nodes without authority to job commands

NJNLANCY
Select nodes with authority to net commands

NJNLANCN
Select nodes without authority to net commands

NJNLASCY
Select nodes with authority to system commands

NJNLASCN
Select nodes without authority to system commands

If none of the following filters is specified, the SSI only returns data from the system where the SSI was called. To request information from other systems in a JESPLEX, specify the MVS system name or JES member selection filters.

NJNLFLTS
Filter by MVS System name or JES Member name (JES2 Only)

Bit Value
Description

NJNLSSYS
Filter by the MVS System name specified by NJNLSYSN

NJNLSMBR
Filter by the JES Member name specified by NJNLMBRN

Set all other fields in the IAZJPNJN control block to binary zeros before issuing the initial IEFSSREQ macro invocation.

For the NJE Node Information service function code SSJPNJRS (release storage), the caller should not alter any fields in the IAZJPNJN control block returned on the last SSJPNJOD function call.

Output Register Information: When control returns to the caller, the general purpose registers contain:

Register	Contents
0	Used as a work register by the system
1	Address of the SSOB control block
2 -- 13	Same as on entry to call
14	Return address
15	Return code

Return Code Information: The SSI places one of the following decimal return codes in register 15. Examine the return code to determine if the request was processed.

Return Code (Decimal)	Meaning
SSRTOK (0)	The NJE Node Information services request completed. Check the SSOBRETN field for specific function information.
SSRTNSUP (4)	The subsystem specified in the SSIBSSNM field does not support the NJE Node Information services function call.
SSRTNTUP (8)	The subsystem specified in the SSIBSSNM field exists but is not active.
SSRTNOSS (12)	The subsystem specified in the SSIBSSNM field is not defined to MVS.
SSRTDIST (16)	The pointer to the SSOB control block or the SSIB control block is not valid, or the function code specified in the SSOBFUNC field is greater than the maximum number of functions supported by the subsystem specified in the SSIBSSNM field.
SSRTLERR (20)	Either the SSIB control block or the SSOB control block has incorrect lengths or formats.
SSRTNSSI(24)	The SSI has not been initialized.

Output Parameters: Output parameters for the function routine are:
- SSOBRETN
- SSJPRETN
- IAZJPNJN (NJE Node Information service)

SSOBRETN Contents: When control returns to the caller and register 15 contains a zero, the NJE Node Information services function places one of the following decimal values in the SSOBRETN field:

Value (Decimal)
Meaning

SSJPOK (0)
Request successful.

SSJPERRW (4)
Request completed with possible errors, see SSJPRETN for reason code.

SSJPERRU (8)
Request cannot be completed because of user error, see SSJPRETN for reason code.

SSJPERRJ (12)
Request cannot be completed, see SSJPRETN for reason code.

SSJPPARM (16)
Error in the parameter list. For example, the SSJP extension has an invalid format:

- It is not an SSJP
- The service version number is not supported
- The SSJP is not large enough

SSJPSTOR (20)
Request cannot be processed because required storage cannot be obtained. No data can be returned to the caller.

SSJPRETN Contents: In addition to the return code in SSOBRETN, the field SSJPRETN contains the service related error or more specific information about the error. SSJPRETN can be set to one of the following values if SSOBRETN is not zero:

Value (Decimal)
Meaning

SSJPUNSF (4)
Unsupported subfunction requested.

SSJPNTDS (8)
SSJPUSER does not point to the correct control block.

SSJPUNSD (12)
Version number in the control block pointed to by SSJPUSER is not correct.

SSJPSMLE (16)
Length field in the control block pointed to by SSJPUSER is too small.

SSJPEYEE (20)
Eyecatcher in the control block pointed to by SSJPUSER is not correct.

SSJPGETM (128)
$GETMAIN failed.

SSJPSTGO (132)
STORAGE OBTAIN failed.

SSJPINVA (136)
Invalid filter arguments were specified.

SSJPGLBL (140)
Function not supported on the global (JES3 only).

NJNDSUBF (256)
Function code specified in SSJPFREQ not supported.

NJNDSPTE (260)
Invalid NJNLSTRP pointer.

NJNDRNGE (264)
The high bound for the range of node numbers that is specified by NJNLRNGH is less than the low bound specified by NJNLRNGL

NJNDRNGZ (268)
The low bound for the range of node numbers, NJNLRNGL, is set to zero.

NJNDOWNE (272)
The own or home node filter, NJNLCOWN, should not be used with other connection status filters.

NJNDSTRE (276)
The caller did not provide enough storage to hold all the data returned by the subfunction call.

NJNDINTE (280)
Internal error building the system information data area.

NJE Node Information service, IAZJPNJN contents: For the NJE Node Information service (function code SSJPNJOD) the following is returned in IAZJPNJN:

Field Name	Description
NJNLSVRM	Subsystem version number (currently 2).
NJNLDPTR	Pointer to data for first NJE node data area.
NJNLMPTR	Pointer to first system information data area.
NJNLDNUM	Number of NJE node data areas returned.
NJNLMNUM	Number of member data areas returned.

The following DSECTs define data structures returned by NJE node SSI.

After a successful call to the SSI, field NJNLDPTR points to a chain of data areas representing data for each NJE node. In addition, the field NJNLMPTR points to a chain of data areas representing member information.

For each NJE node that passes the filter requirements, an element is added to the chain pointed to by NJNLDPTR. Each element is composed of the following sections:

DSECT Name
DSECT Description

NJNHDR
NJE Node Data Header Section

NJNFPREF
Prefix Section

NJNCMN
NJE Node Common Section

In addition to the preceding common sections, JES2 returns the following sections:

DSECT Name
DSECT Description

N2NGEN
JES2 General Data Section

N2NPATH
JES2 Path Information Section

Note: This is an optional section that contains one or more of the following entries:

N2NPTEN
JES2 Path Information Entry

In addition to the common sections listed above, JES3 returns the following sections:

DSECT Name
DSECT Description

N3NGEN
JES3 General Data Section

N3NPATH
JES3 Path Information Section

Note: This is an optional section that contains one or more of the following entries:

N3NPTEN
JES3 Path Information Entry

The following is a layout of the various sections of the NJE Node Information output data area.

```
          NODE INFO SECTION
          +----------------+
   NJNHDR │ NJNHNEXT  =-----------> POINTER TO THE NEXT
          │                │        NJNHDR IN THE CHAIN.
          │                │        ZERO IF END OF CHAIN.
          │                │
          +----------------+
 NJNFPREF │ Prefix Section │
          │                │
          +----------------+
   NJNCMN │ NJE Node       │
          │ Common Info    │
          │ Section        │
          │                │
          +----------------+
   N2NGEN │ Optional JES2  │      NOTE: Included if JES2
          │ NJE Node Info  │
          │ Section        │
```

```
           |                |
           +----------------+
   N2NPATH | Optional JES2  |      NOTE: Included if JES2
           | Path Info      |
           | Section        |
           |                |
           +----------------+
   N2NPTEN | Optional JES2  |      NOTE: Number of entries
   (1..N)  | Path Info      |            specified in
           | Array Entries  |            N2NPNENT.
           |                |
           +----------------+
    N3NGEN | Optional JES3  |      NOTE: Included if JES3
           | NJE Node Info  |
           | Section        |
           |                |
           +----------------+
   N3NPATH | Optional JES3  |      NOTE: Included if JES3
           | Path Info      |
           | Section        |
           |                |
           +----------------+
   N3NPTEN | Optional JES3  |      NOTE: Number of entries
   (1..N)  | Path Info      |            specified in
           | Array Entries  |            N3NPNENT.
           |                |
           +----------------+
```

In addition to the Node information, NLNLMPTR will point to the first element in a separate chain of system information elements. One such element is returned for each SSI call to obtain data. A single element contains an entry for each system that meets the selection filters. These entries contain basic information about the systems in the JESPLEX that were processed to obtain data for this SSI call. The element consists of the following contiguous data structures:

- Header Section mapped by NJSHDR
- Prefix section mapped by JPSYSPRF in macro IAZJPLXI
- System information section mapped by JPSYSINF in macro IAZJPLXI

Note: Repeated calls to the obtain data subfunction of this SSI (SSJPNJOD) without intervening call to release storage subfunction (SSJPNJRS), will cause data from a new SSI call to be added ahead of the data from an earlier SSI call.

NJE Node Data Header Section: The fields in the NJNHDR section are:

Field Name	Description
NJNHEYE	Eyecatcher. This should be set to ‘JPNJNODE’.
NJNHOHDR	Offset to the NJNFPREF prefix section.
NJNHNEXT	Address of next NJE node element.
NJNHJPLX	Address of system information entry of member reporting this NJE node.

Prefix Section: This section contains the total length of the data returned for an NJE node.

The fields in the NJNFPREF section are:

Field Name
Description

NJNFLNG
Total length of all the sections for this element. This does not include the length of the header section.

NJNFTYPE
Type of this section.

NJNFMOD
Modifier for this section.

NJE Node Common Section: This section contains attributes common for JES2 and JES3.

The fields in the NJNCMN section are:

Field Name
Description

NJNCLNG
Length of this section

NJNCTYPE
Type of this section

NJNCMOD
Modifier for this section

NJNCNAME
Node name

NJNCSYSN
Name of the reporting system

NJNCMBRN
MAS member name of the reporting system (JES2 Only)

NJNCSFLG
Node status flags:

Bit Value
Description

NJNCSLCL
Set if this node is the own or home node

NJNCSCNC
Set if this node is a connected node where at least one path is connected

NJNCSPND
Set if this node is a pending node where at least one path is pending

NJNCSADJ
Set if this node is an adjacent node

NJNCSDIR
Set if this node is a directly attached node

NJNCFLG1
Processing flags:

Bit Value	Description
NJNC1SPW	Send the signon password
NJNC1VPW	Verify the signon password
NJNC1EPW	Encrypt the job password
NJNC1PWL	Local password check (JES3 only)
NJNC1SSG	Secure sign-on
NJNC1CSG	Compatible sign-on

NJNCFLG2
More processing flags:

Bit Value	Description
NJNC2TRC	Trace requested
NJNC2RST	Autoconnect or restart
NJNC2HDJ	Hold received jobs
NJNC2HDS	Hold received SYSOUT

NJNCLINE
The associated line name. This line is:

- a dedicated line (JES2 only)
- a default line (JES3 only)

NJNCRINT
Automatic restart (reconnect) interval in minutes

NJNCRETR
Maximum number of reconnection retries. Zero in this field means an indefinite number of retries.

NJNCSECL
Security label (JES2 only)

JES2 General Data Section: This section contains node attributes that are unique for JES2.

The fields in the N2NGEN section are:

Field Name
Description

N2NGLNG
Length of this section

N2NGTYPE
Type of this section

N2NGMOD
Modifier for this section

N2NGNUM
Node number

N2NGSFLG
Node status flags:

Bit Value	Description
N2NGSPMD	Path manager is down
N2NGSNOP	Non path manager mode
N2NGSEND	End node (no forwarding)
N2NGSPRV	Private node
N2NGSDIR	Only allow direct connection

N2NGFLG1
Processing flags:

Bit Value	Description
N2NG1ADV	Authority to device commands
N2NG1AJB	Authority to job commands
N2NG1ANT	Authority to net commands
N2NG1ASY	Authority to system commands
N2NG1XMJ	Transmit jobs
N2NG1XMS	Transmit SYSOUT
N2NG1RCJ	Receive SYSOUT
N2NG1RCS	Receive sysout

N2NGFLG2
More processing flags:

Bit Value
Description

N2NG2ARS
Accept resistance

N2NGCMPT
Compaction table id

N2NGREST
Node resistance

N2NGSUBN
NJE subnet name

N2NGLOGM
VTAM® logmode

N2NGLOGN
Logon device name

N2NGNSVN
NETSRV name

N2NGLNID
Binary device identifier for NJNCLINE

N2NGLGID
Binary device identifier for NJNGLOGN

N2NGNSID
Binary device identifier for NJNGNSVN

JES2 Path Information Section: This section contains an array of JES2 Path Information Entries.

The fields in the N2NPATH section are:

Field Name
Description

N2NPLNG
Length of this section including all the Path Information entries

N2NPTYPE
Type of this section

N2NPMOD
Modifier for this section

N2NPOENT
Offset to the first Path Information entry

N2NPNENT
Number of Path Information entries

N2NPSENT
Size of each Path Information entry

JES2 Path Information Entry: This section contains NJE path attributes unique to JES2.

The fields in the N2NPTEN section are:

Field Name
Description

N2NPSFLG
Path status flags:

Bit Value
Description

N2NPSVLN
Connected by line

N2NPSVMB
Connected by member

N2NPSAWR
Awaiting reset

N2NPSSGN
Signon in progress

N2NPSPND
Connection pending

N2NPNAM1
Set to the intermediate node name when path status is one of the following situations:

- Connected by line: N2NPSVLN
- Connection pending: N2NPSPND
- Awaiting reset: N2NPSAWR

N2NPNAM2
Associated line name or member name. Set to the associated line name if the path status is set to:

- Connected by line: N2NPSVLN
- Signon in progress: N2NPSSGN

Set to the associated member name if the path status is set to:

- Connected by member: N2NPSVMB
- Connection pending: N2NPSPND

N2NPREST
Path resistance

JES3 General Data Section: This section contains attributes unique to JES3.

The fields in the N3NGEN section are:

Field Name
Description

N3NGLNG
Length of this section

N3NGTYPE
Type of this section

N3NGMOD
Modifier for this section

N3NGSFLG
Node connection status:

Bit Value	**Description**
N3NGSSNA	Connected via SNA
N3NGSBSC	Connected via BSC
N3NGSTCP	Connected via TCP
N3NGSIND	Indirect node
N3NGSALS	Alias of home node
N3NGSCTC	CTC node
N3NGSSGS	Send signature
N3NGSSGV	Verify signature

N3NGFLG1
Processing flags:

Bit Value	**Description**
N3NG1DFC	Default class
N3NG1XNR	Writer name is required to hold SYSOUT for external writer
N3NG1NTH	Net hold
N3NG1TLS	Secure socket (TLS)

N3NGEPR
NETPR

N3NGEPU
NETPU

N3NGBUFS
Buffer size

N3NGPRCL
PRTDEF class

N3NGTSCL
PRTTSO class

N3NGXWCL
PRTXWTR class

N3NGPUCL
PUNDEF class

N3NGPART
Spool partition

N3NGBDTI
Bulk data transfer (BDT) id

N3NGSTRM
Stream

N3NGMAXL
Maximum number of lines

N3NGNRJT
Number of job transmitters

N3NGNRJR
Number of job receivers

N3NGNROT
Number of output transmitters

N3NGNROR
Number of output receivers

JES3 Path Information Section: This section contains an array of JES3 path information entries.

The fields in the N3NPATH section are:

Field Name
Description

N3NPLNG
Length of this section

N3NPTYPE
Type of this section

N3NPMOD
Modifier for this section

N3NPOENT
Offset to first JES3 Path Information entry

N3NPNENT
Number of entries

N3NPSENT
Size of each entry

JES3 Path Information Entry: This section contains the NJE path attributes that are unique for JES3.

The fields in the N3NPTEN section are:

Field Name
Description

N3NPNNAM
Node name

System information header: The prefix information addressed by this header is mapped by the JPSYSPRF section of the IAZJPLXI macro. In addition, the system information addressed from this prefix section is mapped by the JPSYSINF section of the IAZJPLXI macro.

The fields in the NJSHDR section are:

Field Name	Description
NJSHEYE	Eyecatcher. Should be set to 'JPNJSYSI'
NJSHOHDR	Offset to first (prefix) section
NJSHNEXT	Address of the next NJSHDR header element

SPOOL Volume Information

The SPOOL Volume Information service provides information about the JES managed SPOOL volumes. Information can be obtained on all SPOOL volumes or filters can be supplied to limit which volumes are returned. The returned information is grouped into partitions to be compatible with how JES3 organizes SPOOL volumes. JES2 will only return one partition structure that contains all the SPOOL volumes being used by JES2.

See the following sections for more information about SPOOL Volume Information:

- "Type of Request"
- "Use Information"
- "Issued to"
- "Related SSI Codes"
- "Related Concepts"
- "Environment"
- "Input Register Information" on page 271
- "Input Parameters" on page 271
- "Output Register Information" on page 275
- "Return Code Information" on page 275
- "Output Parameters" on page 276

Type of Request: Directed SSI Call.

Use Information: To use the JES property information services SSI, callers must first decide the function they want to perform. The appropriate parameter list must be obtained and pointed to by SSJPUSER.

Issued to: A JES subsystem (either primary or secondary). The subsystem does not have to be associated with the requesting address space.

Related SSI Codes: None.

Related Concepts: None.

Environment: The caller (issuer of the IEFSSREQ macro) must include the following mapping macros:

- CVT

- IEFJESCT

Data areas commonly referenced are mapped by the following mapping macros:
- IEFSSOBH
- IEFJSSIB
- IAZSSJP
- IAZJPSPL (SPOOL Volume Information)

The caller must meet the following requirements:

Caller variable	**Caller value**
Minimum Authorization	Problem state, any PSW key
Dispatchable unit mode	Task
AMODE	24-bit or 31-bit
Cross memory mode	PASN=HASN=SASN
ASC mode	Primary
Interrupt status	Enabled for I/O and external interrupts
Locks	No locks held
Control Parameters	The SSOB, SSIB, IAZSSJP, and IAZJPSPL, control blocks can be in 24- or 31-bit virtual storage
Recovery	The caller should provide an ESTAE-type recovery environment. See *z/OS MVS Programming: Assembler Services Guide* for more information about an ESTAE-type recovery environment.

Figure 24 on page 271 shows the environment at the time of the call for SSI function code 82, SPOOL Volume Information Subfunction.

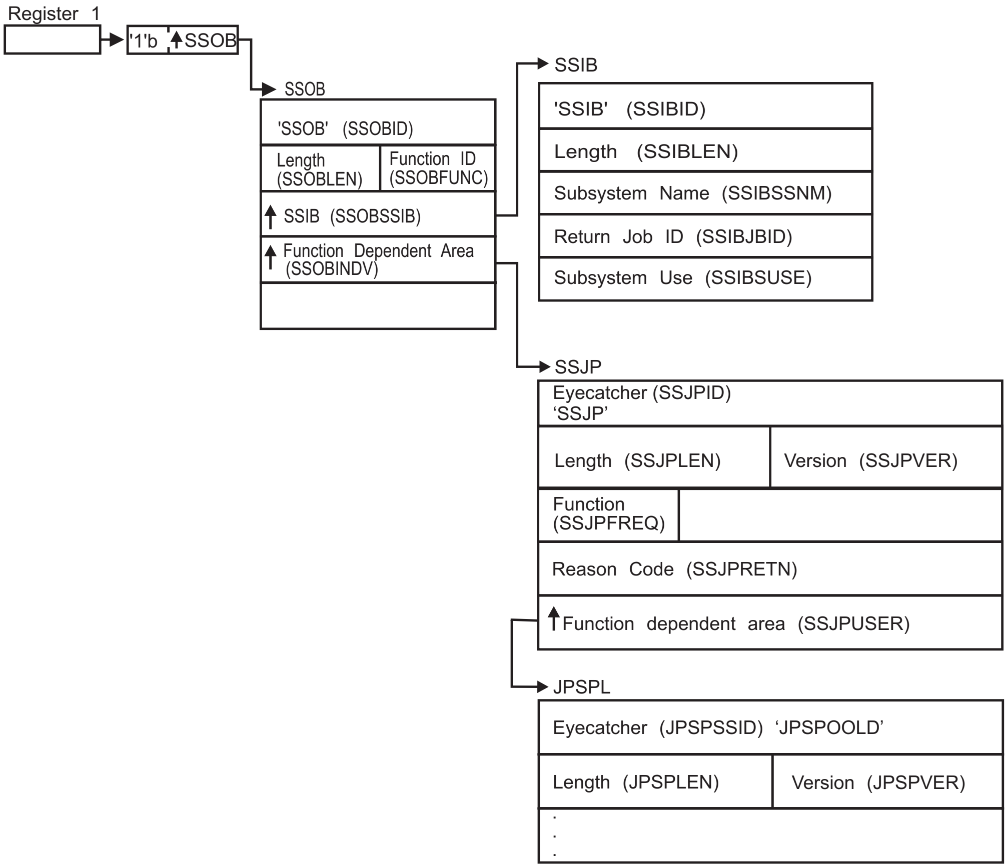
Register 1
'1'b
SSOB
SSOB
'SSOB' (SSOBID)
Length (SSOBLEN)
Function ID (SSOBFUNC)
SSIB (SSOBSSIB)
Function Dependent Area (SSOBINDV)
SSIB
'SSIB' (SSIBID)
Length (SSIBLEN)
Subsystem Name (SSIBSSNM)
Return Job ID (SSIBJBID)
Subsystem Use (SSIBSUSE)
SSJP
Eyecatcher (SSJPID) 'SSJP'
Length (SSJPLEN)
Version (SSJPVER)
Function (SSJPFREQ)
Reason Code (SSJPRETN)
Function dependent area (SSJPUSER)
JPSPL
Eyecatcher (JPSPSSID) 'JPSPOOLD'
Length (JPSPLEN)
Version (JPSPVER)

Figure 24. Environment at Time of Call for SSI Function Code 82, SPOOL Volume Information Subfunction

Input Register Information: Before issuing the IEFSSREQ macro, the caller must ensure that the following general purpose registers contain:

Register
Contents

1 Address of a 1-word parameter list that has the high-order bit on and a pointer to the SSOB control block in the low-order 31 bits.

13 Address of a standard 18-word save area.

Input Parameters: Input parameters for the function routine are:

- SSOB
- SSIB
- IAZSSJP
- IAZJPSPL (SPOOL Volume Information)

SSOB Contents: The caller sets the following fields in the SSOB control block on input:

Field Name
Description

SSOBID
Identifier 'SSOB'

SSOBLEN
Length of the SSOB (SSOBHSIZ) control block

SSOBFUNC
SSI function code 82 (SSOBSSJP)

SSOBSSIB
Address of the SSIB control block or zero (if this field is zero, the life-of-job SSIB is used). See “Subsystem Identification Block (SSIB)” on page 8 for more information about the life-of-job SSIB

SSOBINDV
Address of the function-dependent area (IAZSSJP control block)

Set all other fields in the SSOB control block to binary zeros before issuing the IEFSSREQ macro.

SSIB Contents: If you do not use the life-of-job SSIB, the caller must provide an SSIB and set the following fields in the SSIB control block on input:

Field Name	Description
SSIBID	Identifier 'SSIB'
SSIBLEN	Length of the SSIB (SSIBSIZE) control block
SSIBSSNM	Subsystem name: name of the subsystem to which this SPOOL Volume Information Services request is directed.

Set all other fields in the SSIB control block to binary zeros before issuing the IEFSSREQ macro.

IAZSSJP Contents: The caller must set the following fields in the IAZSSJP control block on input:

Field Name
Description

SSJPID
Eyecatcher for the control block (set to 'SSJP')

SSJPLEN
Length of the IAZSSJP (SSJPSIZE) control block

SSJPVER
Input version of the IAZSSJP control block. Set to SSJPVER1 for version 1 of the control block or to SSJPVERC for the current version of the control block.

SSJPFREQ
Function to be performed on this request. Valid functions and their related SSJPUSER area are:

Field Value	Description
SSJPSPOD	IAZJPSPL SPOOL Volume Information service, obtain data

SSJPSPRS
IAZJPSPL SPOOL Volume Information service, release storage

SSJPUSER
Pointer to service specific data area '(IAZJPSPL)'

Set all other fields in the IAZSSJP control block to binary zeros before issuing the IEFSSREQ macro.

SPOOL Volume Information service, IAZJPSPL contents: For the SPOOL Volume Information service (function code SSJPSPOD), the caller must set the following fields in the IAZJPSPL control block:

Field Name	Description
JPSPSSID	Eyecatcher of the control block (set to 'JPSPOOLD')
JPSPLEN	Length of the IAZJPSPL (JPSPSZE) control block
JPSPVER	Input version of the IAZJPSPL control block. Set to JPSPSVR# for the current (latest) version.
JPSPSTRP	Storage management anchor for use by the subsystem that responds to this request. It is expected that the caller will set this field to zero the first time IAZJPSPL is used and from that point on the field will be managed by the subsystem.

The caller can also set the following fields in the IAZJPSPL control block on input to limit (or select) which data is returned. If no filters are specified, all data is returned. If any filters are specified, at least one of the filter conditions in each of the separate filters must be matched before data is returned.

Field Name	Description
JPSPPARF	Partition filters. Each bit corresponds to a filter condition. This filter is matched if at least one of the specified filter conditions is met.

Bit Value	Description
JPSPFULL	Filter on spool partitions that are FULL (JES3 only)
JPSPPNM	Filter on the spool partition name specified in field JPSPPNAM (JES3 only)
JPSPALD	Filter on spool partitions for which spool allocations are allowed (JES3 only)
JPSPNALD	Filter on spool partitions for which spool allocations are not allowed (JES3 only)

JPSPLFTP
Filter on the default spool partition (JES3 only)

JPSPIDTA
Filter on spool partitions that contain initialization data (JES3 only)

JPSPNOVF
Filter on spool partitions that cannot overflow (JES3 only)

JPSPPOVF
Filter on spool partitions for which at least one other partition can overflow into them (JES3 only)

JPSPELF1
Extent Status Filters. Each bit corresponds to a filter condition. This filter will be matched if at least one of the specified filter conditions is met.

Bit Value
Description

JPSPACT
Extent Active

JPSPSTRT
Extent Starting (JES2 Only)

JPSPDRN
Extent Draining

JPSPHALT
Extent Halting (JES2 Only)

JPSPINAC
Extent Inactive (JES2 Only)

JPSPHLD
Extent Held (JES3 Only)

JPSPBADT
Extent holds a Bad Track (JES3 Only)

JPSPSTT
Extent STT (JES3 Only)

JPSPELF2
Extent filters. Each bit corresponds to a filter condition that must be matched before data is returned.

Bit Value
Description

JPSPEXI
Filter on the Extent ID specified in the field JPSPEXTI

JPSPTGU
Filter on the track group utilization level specified in the field JPSPTGUT (JES2 Only)

JPSPTGM
Filter on the minimum number of total track groups specified in the field JPSPTGMN (JES2 Only)

JPSPAMB
Filter on the JES2 affinity member name specified in the field JPSPAMBR (JES2 Only)

JPSPASY
Filter on the JES2 affinity MVS system name specified in the field JPSPASYS (JES2 Only)

JPSPEFL3
Extent filters:

Bit Value
Description

JPSPXTND
Extent EXTENDING

JPSPMIGR
Extent MIGRATING

JPSPMAPP
Extent MAPPED

Set all other fields in the IAZJPSPL control block to binary zeros before issuing the initial IEFSSREQ macro invocation.

For the SPOOL Volume Information service function code SSJPSPRS (release storage), the caller should not alter any fields in the IAZJPSPL control block returned on the last SSJPSPOD function call.

Output Register Information: When control returns to the caller, the general purpose registers contain:

Register Contents	
0	Used as a work register by the system
1	Address of the SSOB control block
2 — 13	Same as on entry to call
14	Return address
15	Return code

Return Code Information: The SSI places one of the following decimal return codes in register 15. Examine the return code to determine if the request was processed.

Return Code (Decimal)
Meaning

SSRTOK (0)
The SPOOL Volume Information services request completed. Check the SSOBRETN field for specific function information.

SSRTNSUP (4)
The subsystem specified in the SSIBSSNM field does not support the SPOOL Volume Information services function call.

SSRTNTUP (8)
The subsystem specified in the SSIBSSNM field exists but is not active.

SSRTNOSS (12)
The subsystem specified in the SSIBSSNM field is not defined to MVS.

SSRTDIST (16)
The pointer to the SSOB control block or the SSIB control block is not valid, or the function code specified in the SSOBFUNC field is greater than the maximum number of functions supported by the subsystem specified in the SSIBSSNM field.

SSRTLERR (20)
Either the SSIB control block or the SSOB control block has incorrect lengths or formats.

SSRTNSSI(24)
The SSI has not been initialized.

Output Parameters: Output parameters for the function routine are:
- SSOBRETN
- SSJPRETN
- IAZJPSPL (SPOOL Volume Information service)

SSOBRETN Contents: When control returns to the caller and register 15 contains a zero, the SPOOL Volume Information services function places one of the following decimal values in the SSOBRETN field:

Value (Decimal)
Meaning

SSJPOK (0)
Request successful.

SSJPERRW (4)
Request completed with possible errors, see SSJPRETN for reason code.

SSJPERRU (8)
Request cannot be completed because of user error, see SSJPRETN for reason code.

SSJPERRJ (12)
Request cannot be completed, SSJPRETN contains internal reason code.

SSJPPARM (16)
Error in the parameter list. For example, the SSJP extension is an invalid format
- It is not an SSJP
- The service version number is not supported
- The SSJP is not large enough

SSJPSTOR (20)
Request cannot be processed because required storage cannot be obtained. No data can be returned to the caller.

SSJPRETN Contents: In addition to the return code in SSOBRETN, the field SSJPRETN contains the service related error or more specific information about the error. SSJPRETN can be set to one of the following values if SSOBRETN is not zero:

Value (Decimal)
Meaning

SSJPUNSF (4)
Unsupported subfunction requested.

SSJPNTDS (8)
SSJPUSER does not point to the correct control block.

SSJPUNSD (12)
Version number in the control block pointed to by SSJPUSER is not correct.

SSJPSMLE (16)
Length field in the control block pointed to by SSJPUSER is too small.

SSJPEYEE (20)
Eyecatcher in the control block pointed to by SSJPUSER is not correct.

SSJPGETM (128)
$GETMAIN failed.

SSJPSTGO (132)
STORAGE OBTAIN failed.

SSJPINVA (136)
Invalid filter arguments were specified.

SSJPGLBL (140)
Function not supported on the global (JES3 only).

SPOOL Volume Information service, IAZJPSPL contents: For the SPOOL Volume Information service (function code SSJPSPOD), the following parameters are returned in IAZJPSPL:

Field Name	Description
JPSPVERO	Subsystem version number (currently X'0200').
JPSPLPTR	Pointer to data for first partition data area.
JPSPNPAR	Number of partition data areas returned.
JPSPTGT	Number of track groups defined across all partitions.
JPSPTGIU	Number of track groups in use across all partitions.
JPSPTKT	Number of tracks across all partitions.
JPSPTKU	Number of tracks in use across all partitions.
JPSPTGAT	Number of active track groups defined across all partitions.
JPSPTGAI	Number of active track groups in use across all partitions.
JPSPTKAT	Number of active tracks across all partitions.
JPSPTKAU	Number of active tracks in use across all partitions.

For each Spool Partition that passes the filter requirements, a Spool Partition element is added to the chain pointed to by JPSPLPTR. Each element is composed of the following sections:

DSECT Name	DSECT Description
SPPHDR	Partition Header Section
SPPPREF	Partition Prefix Section
SPPGENI	Partition General Information Section
SPPJES3I	Partition JES3 Specific Information Section

Each Spool Partition element has a chain of one or more Spool Extent sections. The first of these sections is pointed to by the field SPPFRSTE in the Partition Header section. The Spool Extent information is composed of the following sections:

DSECT Name	DSECT Description
SPEHDR	Spool Extent Header Section
SPEPREF	Spool Extent Prefix Section
SPEGENI	Spool Extent General Information Section
SPEJ2I	Spool Extent JES2 Specific Information Section
SPEJ2AI	Spool Extent JES2 Affinity Specific Information
SPEJ2AE	Spool Extent JES2 Affinity Array Entry
SPEJ3I	Spool Extent JES3 Specific Information

The following is a layout of the various sections of the Spool Information output data area. The basic layout is a chain of Spool Partition Information sections. Each Partition section has a chain of Extent Information sections.

```
       SSI 82 SPOOL DATA PARAMETER LIST:
       +-----------------+
 JPSPL | . . .           |       NOTE: The output
       |                 |             partition rollup
       | JPSPLPTR  =---------+         values reside
       | . . .           |   |         here.
       +-----------------+   |
                             |
                             |
    +------------------------+
    |
    |
    |  SPOOL PARTITION INFO SECTION:
    +->+-----------------+
SPPHDR | SPPNXTP   =-----------> POINTER TO THE NEXT
```

```
         |                |        SPPHDR IN THE CHAIN.
         | SPPFRSTE  =--------+    ZERO IF END OF CHAIN.
         | . . .          |   |
         +----------------+   |    NOTE: JES2 will always
 SPPPREF | Prefix Section |   |          have 1 partition.
         | . . .          |   |          JES3 can have
         +----------------+   |          multiple.
 SPPGENI | General        |   |
         | Partition Info |   |
         | Section        |   |
         | . . .          |   |
         +----------------+   |
SPPJES3I | Optional JES3  |   |
         | Partition      |   |
         | Info Section   |   |
         | . . .          |   |
         +----------------+   |
                              |
                              |
      +-----------------------+
      |
      |
      |  SPOOL EXTENT INFO SECTION:
      +->+----------------+
  SPEHDR |                |
         | SPENXTE --------------> POINTER TO THE NEXT
         | . . .          |        SPEHDR IN THE CHAIN.
         +----------------+        ZERO IF END OF CHAIN.
 SPEPREF | Prefix Section |
         | . . .          |
         +----------------+
 SPEGENI | General Extent |
         | Info Section   |
         | . . .          |
         +----------------+
  SPEJ2I | Optional JES2  | NOTE: Included if JES2
         | Extent Info    |
         | Section        |
         | . . .          |
         +----------------+
 SPEJ2AI | Optional JES2  | NOTE: Included if JES2 and
         | Extent Affinity|       Affinity exists.
         | Array Header   |
         | Section        |
         | . . .          |
         +----------------+
 SPEJ2AE | Optional JES2  | NOTE: Included if the SPEJ2AI
 (1..N)  | Extent Affinity|       Extent Array header
         | Array Elements |       Section is included. #
         |                |       of elements is SPE2ANUM.
         | . . .          |
         +----------------+
 SPEJ2MI | Optional JES2  | NOTE: Included if JES2 and
         | Extent Active  |       extent is associated
         | Migration Info |       with an active
         | Section        |       migration.
         | . . .          |
         +----------------+
 SPEJ3I  | Optional JES3  | NOTE: Included if JES3.
         | Extent Info    |
         | Section        |
         | . . .          |
         +----------------+
```

Spool Partition Header Section: Each Spool Partition information element begins with a header section. There can be multiple Spool Partitions returned, and the SPPNXTP pointer is used to navigate to the next Spool Partition Header section in the chain.

Note: JES2 will only have a single information element in this chain.

The fields in the SPPHDR section are:

Field Name	Description
SPPEYE	Eyecatcher. Should be set to 'SPOOLPRT'
SPPOPRF	Offset to the prefix section
SPPNXTP	Address of the next Spool Partition information element
SPPFRSTE	Address of the first Extent section for this Partition

Spool Partition Prefix Section: This section holds the length of all the information reported for this Spool Partition. This length does not include the length of the Spool Partition Header section: This length does include all the storage needed to report both the Spool Partition sections as well as all the related Extent sections. To get addressability to this section, add the SPPOPRF header field to the header (SPPHDR) address.

The fields in the SPPPREF section are:

Field Name	Description
SPPPRLN	Length of the entire Spool Partition element, not including the length of the Partition Header.
SPPPRTP	Type of this section
SPPPRMD	Modifier for this section

Spool Partition General Information Section: This section holds details that are common to both JES2 and JES3.

The fields in the SPPGENI section are:

Field Name	Description
SPPGLN	Length of this section
SPPGTY	Type of this section
SPPGMD	Modifier for this section

SPPGNM
Partition name. (Always set to blanks for JES2)

SPPGTGT
Total Track Groups for all extents in this Partition

SPPGTGU
Total Track Group in use for all extents in this Partition

SPPGTKT
Total Tracks for all extents in this Partition

SPPGTKU
Total Tracks in use for all extents in this Partition

SPPGFLG1
Partition Indicators

Bit Name	Description
SPPGNSPC	Set ON when no free space currently exists in the partition
SPPGACTV	Set ON when active extents exist in the partition
SPPGALOC	Set ON when some extents have space available that is not currently utilized.

SPPGTGAT
Total active Track Groups for all extents in this Partition

SPPGTGAU
Total active Track Group in use for all extents in this Partition

SPPGTKAT
Total active Tracks for all extents in this Partition

SPPGTKAU
Total active Tracks in use for all extents in this Partition

Spool Partition JES3 Specific Information: This section contains a series of flags that describe JES3 Spool Partition information.

The fields in the SPPJES3I section are:

Field Name	Description
SPP3LN	Length of this section
SPP3TY	Type of this section
SPP3MD	Modifier for this section
SPP3OPAR	Overflow partition name
SPP3STSF	Partition Status flags

Bit Value
Description

SPP3ALD
Partition allocation is allowed

SPP3DFTP
This is the default partition

SPP3IDTA
Initialization data exists on this partition

SPP3OVER
This partition has overflowed into another partition

SPP3POVI
At least one other partition might overflow into this partition

SPP3POVO
This partition might overflow into another partition

SPP3THRF
Partition Threshold Flags

Bit Value
Description

SPP3MRG
Marginal threshold exceeded

SPP3MIN
Minimal threshold exceeded

SPP3MRGP
Marginal SLIM threshold percentage

SPP3MINP
Minimal SLIM threshold percentage

Spool Extent Header Section: Each individual Spool Extent Information section begins with a header section. This section holds an offset to the start of the detailed extent information, as well as a pointer to the next extent defined for this spool partition.

To get addressability to this section, use the SPPFRSTE pointer in the partition header (SPPHDR).

There can be multiple extents returned. The SPENXTE pointer is used to navigate to the next extent in the chain.

To get from this header to the extent prefix section for this extent, add the SPEOPRF offset to the extent header (SPEHDR) address.

The fields in the SPEHDR section are:

Field Name
Description

SPEEYE
Eyecatcher. It should be set to ‘SPOOLEXT’

SPEOPRF
Offset to the Extent Prefix section

SPENXTE
Address of the next Extent Header section

Spool Extent Prefix Section: This section holds the combined length of all the sections needed to report information about an individual initiator. To get addressability to this section, add the SPEOPRF header field to the header (SPEHDR) address.

The fields in the SPEPREF section are:

Field Name	Description
SPEPRLN	Combined length of the individual extent sections. This does not include the length of the header section.
SPEPRTP	Type of this section
SPEPRMD	Modifier for this section

Spool Extent General Information Section: This section holds general information about the spool extent.

The fields in the SPEGENI section are:

Field Name	Description
SPEGLN	Length of this section
SPEGTY	Type of this section
SPEGMD	Modifier for this section
SPEGSTS	Extent Status string
SPEGSTSB	Extent Status byte

Field Value	Description
SPEGACT	ACTIVE status
SPEGSTRT	STARTING status
SPEGHALT	HALTING status
SPEGDRN	DRAINING status
SPEGINAC	INACTIVE status

SPEGHELD
HELD status (JES3 Only)

SPEGXTND
EXTENDING status

SPEGMIGR
MIGRATING status

SPEGMAPP
MAPPED status

SPEGFLG1
Extent General Status Flags

Bit Name
Description

SPEGNRML
Set ON when the extent is in ACTIVE status

SPEGRSVD
Set ON when the extent is in RESERVED status

SPEGNSEL
Set ON when work on this extent is not selectable

SPEGPERC
Percent complete for the in-progress $MSPL spool migration command.

SPEGEXTI
Extent identifier. This is the Volume Name in JES2 and the DDNAME in JES3.

SPEGDSNM
Data set name on which this extent physically resides

SPEGTGT
Total track groups

SPEGTGU
Total track groups in use

SPEGTTRK
Total tracks

SPEGTTKU
Total tracks in use

SPEGLCYL
Low cylinder. Note that this is a normalized value (cccCC)

SPEGLHED
Low head

SPEGLMTR
Low MQTR value for JES2; Low MMRRRR value for JES3

SPEGLMM
Defines JES3 extent number

SPEGLRRN
Defines JES3 record number

SPEGHCYL
High Cylinder. Note this is the normalized value (cccCC)

SPEGHHED
High head

SPEGHMTR
High MQTR value for JES2; High MMRRRR value for JES3

SPEGHMM
Defines JES3 extent number

SPEGHRRN
Defines JES3 record number

SPEGTPCY
Tracks per cylinder

SPEGRPTK
Records per track

SPEGTPTG
Tracks per track group

SPEGEXTN
Extent number

SPEGVSER
VOLSER where this extent's data set resides

SPEGLTRK
Low Track Number

SPEGHTRK
High Track Number

Spool Extent JES2 Specific Information: This section holds Extent information specific to JES2.

The fields in the SPEJ2I section are:

Field Name
Description

SPE2LN
Length of this section

SPE2TY
Type of this section

SPE2MD
Modifier for this section

SPE2CMD
Current Command string. This is set to blanks if no command is active.

SPE2CMDB
Current Command byte

  Field Value
  Description

  SPE2NCMD
  No command is Active

  SPE2STRT
  START command

SPE2FRMT
FORMAT command

SPE2HALT
HALT command

SPE2DRN
DRAIN command

SPE2XTND
EXTEND command

SPE2MIGR
MIGRATE command

SPE2FLG1
Extent Status Indicators

Bit Name	**Description**
SPE2STNT	If set ON, this extent is stunted
SPE2ALLM	If set ON, ALL members have affinity to this volume. The Affinity Array sections do NOT exist. If set OFF, SOME members have affinity to this volume. The Affinity Array sections DO exist.
SPE2MAPT	This extent is a target of MAPPED extents
SPE2ACTM	This extent is either the source or target of an active migration. Section SPEJ2MI has the details.

SPE2LFTK
Largest number of contiguous free tracks

SPE2HTRK
Highest used track relative to the start of the data set

SPE2TARG
Target Extent Identifier. This is the Volume Name in JES2 where this extent is migrating to, or has migrated to.

Spool Extent JES2 Affinity Specific Information Section: This section holds system affinity information specific to JES2.

This section only exists if the SPE2ALLM indicator in the JES2 info section (SPEJ2I) is OFF.

The fields in the SPEJ2AI section are:

Field Name	**Description**
SPE2ALN	Length of this section
SPE2ATY	Type of this section

SPE2AMD
Modifier for this section

SPE2ANUM
Number of entries in the Affinity Array.

Note: This number can be ZERO in cases where no members match the selection filters.

SPE2ALEN
Length of an entry in the Affinity Array

Spool Extent JES2 Affinity Array Entry: to get addressability to the first array entry, add the SPE2ALN field in the SPEJ2AI JES2 Affinity Array header to the SPEJ2AI Affinity Array header address.

Use the SPE2ANUM and SPE2ALEN fields in the SPEJ2AI JES2 Affinity Array header to loop through the array entries.

This array will not exist if ALL members have affinity to the extent. See the SPE2ALLM indicator for further discussion.

The fields in the SPEJ2AE section are:

Field Name
Description

SPE2EMBR
JES2 member Name

SPE2ESYS
MVS System Name

Spool Extent Active Migration JES2 Specific Information Section: only available when the bit SPE2ACTM is ON in the Spool Extent JES2 Specific Information section SPEJ2I.

This section only exists if the SPE2ACTM indicator in the JES2 info section (SPEJ2I) is ON.

The fields in the SPEJ2MI section are:

Field Name
Description

SPE2MLN
Length of this section

SPE2MTY
Type = JES2 Info

SPE2MMD
Type Mod = JES2 Migration

SPE2MFG1
Extent Active Migration Indicators:

Field Name
Description

SPE2M1SR
Extent is source of migration

SPE2M1TG
Extent is target of migration

SPE2M1MV
MOVE migration

SPE2M1MG
MERGE migration

SPE2NCAN
Migration cannot be cancelled

SPE2MERR
Migration failed and is being cleaned up

The following fields are only valid if SPE2M1SR is ON; they document where the source extent is migrating to.

Field Name	Description
SPE2MPH	Migration phase string.
SPE2MPHB	Migration phase byte. Contains one of the following values that matches the migration phase string:

Field Name	Description
SPE2NOMG	No migration active
SPE2MPND	PENDING phase
SPE2MINI	INITIALIZING phase
SPE2MSET	SETUP phase
SPE2MCPY	COPY phase
SPE2MCUP	CATCHUP phase
SPE2MCAN	CANCEL phase
SPE2MBAK	BACKOUT phase
SPE2MCLN	CLEANUP phase

Field Name	Description
SPE2MMGR	Migrator JES2 MAS member name
SPE2MVSR	Target extent VOLSER that the current extent is migrating to
SPE2MDSN	Target extent SPOOL data set name that the current extent is migrating to

SPEJ2MIS
Size of this section

Spool Extent JES3 Specific Information Section: This section holds Extent information specific to JES3.

The fields in the SPEJ3I section are:

Field Name	Description
SPE3LN	Length of this section
SPE3TY	Type of this section
SPE3MD	Modifier for this section
SPE3RCSZ	Extent record size
SPE3FLG1	Extent Status Indicators:

Bit Name	Description
SPE3STRK	Set ON for a Single Track Table
SPE3BTRK	Set ON when the extent contains a bad track

Initiator Information

The Initiator Information service reports information about the resources associated with job execution. These resources include initiator groups, the systems on which these groups are enabled, the job classes processed by the initiator groups, and the initiators that are allocated for managing jobs.

See the following sections for more information about Initiator Information:

- "Type of Request"
- "Use Information"
- "Issued to" on page 290
- "Related SSI Codes" on page 290
- "Related Concepts" on page 290
- "Environment" on page 290
- "Input Register Information" on page 291
- "Input Parameters" on page 291
- "Output Register Information" on page 295
- "Return Code Information" on page 296
- "Output parameters" on page 296

Type of Request: Directed SSI Call.

Use Information: To use the JES property information services SSI, callers must specify the sub-function they want to perform in SSJPFREQ. Sub-functions used for initiator information are SSJPITOD (obtain data) and SSJPITRS (release storage). The appropriate parameter list must be built according to the JPITD structure mapped by IAZJPITD and pointed to by SSJPUSER.

Issued to: A JES subsystem (either primary or secondary). The subsystem does not have to be associated with the requesting address space.

Related SSI Codes: None.

Related Concepts: None.

Environment: The caller (issuer of the IEFSSREQ macro) must include the following mapping macros:

- CVT
- IEFJESCT

Data areas commonly referenced are mapped by the following mapping macros:

- IEFSSOBH
- IEFJSSIB
- IAZSSJP
- IAZJPITD (Initiator Information)

The caller must meet the following requirements:

Caller variable	Caller value
Minimum Authorization	Problem state, any PSW key
Dispatchable unit mode	Task
AMODE	24-bit or 31-bit
Cross memory mode	PASN=HASN=SASN
ASC mode	Primary
Interrupt status	Enabled for I/O and external interrupts
Locks	No locks held
Control Parameters	The SSOB, SSIB, IAZSSJP, and IAZJPITD, control blocks can be in 24- or 31-bit virtual storage
Recovery	The caller should provide an ESTAE-type recovery environment. See *z/OS MVS Programming: Assembler Services Guide* for more information about an ESTAE-type recovery environment.

Figure 25 on page 291 shows the environment at the time of the call for SSI function code 82, Initiator Information Subfunction.

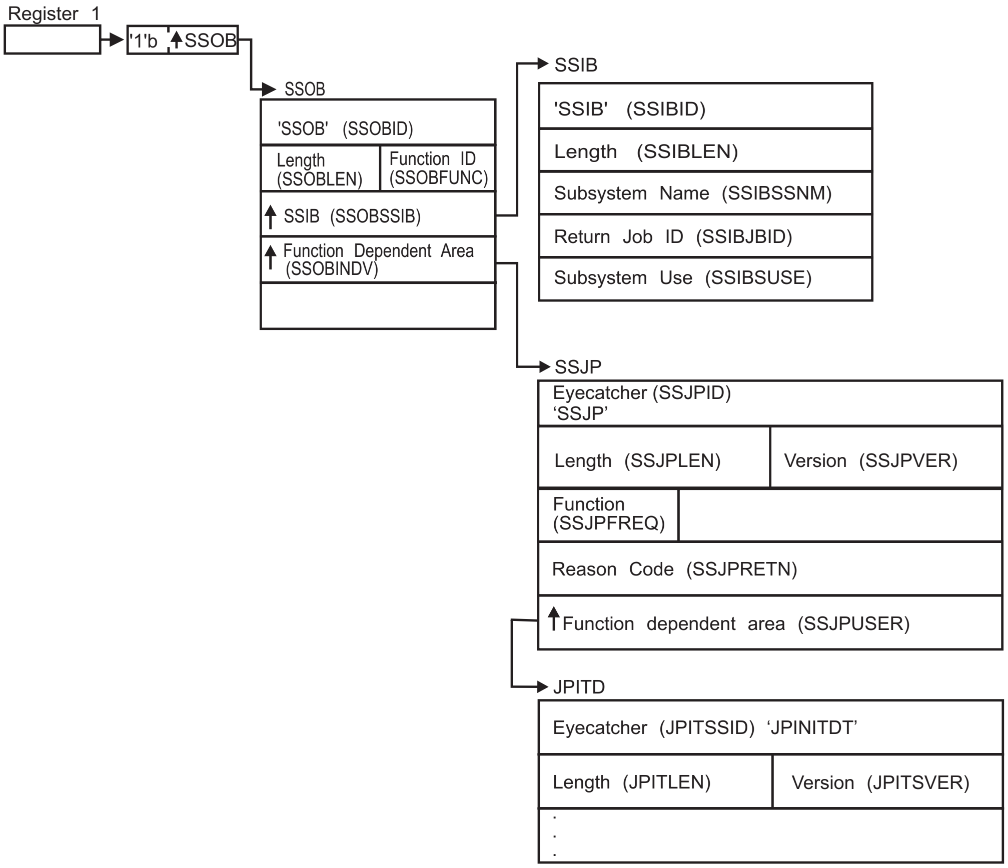
Register 1
'1'b
SSOB
SSOB
'SSOB' (SSOBID)
Length (SSOBLEN)
Function ID (SSOBFUNC)
SSIB (SSOBSSIB)
Function Dependent Area (SSOBINDV)
SSIB
'SSIB' (SSIBID)
Length (SSIBLEN)
Subsystem Name (SSIBSSNM)
Return Job ID (SSIBJBID)
Subsystem Use (SSIBSUSE)
SSJP
Eyecatcher (SSJPID) 'SSJP'
Length (SSJPLEN)
Version (SSJPVER)
Function (SSJPFREQ)
Reason Code (SSJPRETN)
Function dependent area (SSJPUSER)
JPITD
Eyecatcher (JPITSSID) 'JPINITDT'
Length (JPITLEN)
Version (JPITSVER)

Figure 25. Environment at Time of Call for SSI Function Code 82, Initiator Information Subfunction

Input Register Information: Before issuing the IEFSSREQ macro, the caller must ensure that the following general purpose registers contain:

Register	Contents
1	Address of a 1-word parameter list that has the high-order bit on and a pointer to the SSOB control block in the low-order 31 bits.
13	Address of a standard 18-word save area.

Input Parameters: Input parameters for the function routine are:

- SSOB
- SSIB
- SSJP mapped by IAZSSJP
- JPITD mapped by IAZJPITD (Initiator information)

SSOB Contents: The caller sets the following fields in the SSOB control block on input:

Field Name	Description
SSOBID	Identifier 'SSOB'

SSOBLEN
Length of the SSOB (SSOBHSIZ) control block

SSOBFUNC
SSI function code 82 (SSOBSSJP)

SSOBSSIB
Address of the SSIB control block or zero (if this field is zero, the life-of-job SSIB is used). See "Subsystem Identification Block (SSIB)" on page 8 for more information about the life-of-job SSIB

SSOBINDV
Address of the function-dependent area (IAZSSJP control block)

Set all other fields in the SSOB control block to binary zeros before issuing the IEFSSREQ macro.

SSIB Contents: If you do not use the life-of-job SSIB, the caller must provide an SSIB and set the following fields in the SSIB control block on input:

Field Name	Description
SSIBID	Identifier 'SSIB'
SSIBLEN	Length of the SSIB (SSIBSIZE) control block
SSIBSSNM	Subsystem name: name of the subsystem to which this Initiator Information Services request is directed.

Set all other fields in the SSIB control block to binary zeros before issuing the IEFSSREQ macro.

SSJP Contents: The caller must set the following fields in the IAZSSJP control block on input:

Field Name
Description

SSJPID
Eyecatcher for the control block (set to 'SSJP')

SSJPLEN
Length of the IAZSSJP (SSJPSIZE) control block

SSJPVER
Input version of the IAZSSJP control block. Set to SSJPVER1 for version 1 of the control block or to SSJPVERC for the current version of the control block.

SSJPFREQ
Function to be performed on this request. Valid functions and their related SSJPUSER area are:

Field Value	Description
SSJPITOD	IAZJPITD Initiator Information service, obtain data

SSJPITRS
IAZJPITD Initiator Information service, release storage

SSJPUSER
Pointer to service specific data area (JPITD mapped by IAZJPITD)

Set all other fields in the IAZSSJP control block to binary zeros before issuing the IEFSSREQ macro.

Initiator Information service parameter list, JPITD contents: For the Initiator Information service (function code SSJPITOD), the caller must set the following fields in the IAZJPITD control block:

Field Name
Description

JPITSSID
Eyecatcher of the control block (set to 'JPINITDT').

JPITLEN
Length of the JPITD parameter list. Depending on the version of the parameter list (see below), set length to JPITSZE (if you use current version) or JPITSZE1 (if you use version 1).

JPITSVER
Input version of the IAZJPITD parameter list. Set to JPITSVR1 for version 1. Set to JPITSVR2 for version 2. Set to JPITSVR# for the current (latest) version. Set to JPITCVRL for service version level of IAZJPITD. Set to JPITCVRM for service version modifier of IAZJPITD.

JPITSTRP
Storage management anchor for use by the subsystem that responds to this request. It is expected that the caller will set this field to zero the first time JPITD is used. From that point on, the field will be managed by the subsystem.

The caller can also set the following fields in the JPITD parameter list on input to limit (or select) which data will be returned.

Field Name
Description

JPITFLG1
Flag byte which describes which filters to use to limit or select the data to be returned. Each bit corresponds to a filter that must be matched before data is returned.

Bit Value
Description

JPIT1GRP
Return initiator information for one or more initiator groups that match the group name indicated by JPITGNAM.

JPIT1NAS
Return initiator information for one or more systems in a sysplex that match the MVS system name indicated by JPITSNAM.

JPIT1NAM
Return initiator information for one or more systems in a sysplex that match the JES member name indicated by JPITMNAM.

Note: For JES3, the JES member name is synonymous with the MVS system name.

If neither JPIT1NAS nor JPIT1NAM is specified, SSI will only return data from the system where SSI is called. To request information from other systems or members in a JESPLEX, specify the system or member selection filter.

The following two bits are used together to determine class filtering. If the first bit (JPIT1CLS) is set to ON, it indicates that class filtering is requested. If class filtering is requested, then the second bit JPIT1CLW has the following meaning:

- If JPIT1CLW is OFF, the caller is requesting jobclass filtering.
- If JPIT1CLW is ON, the caller is requesting service class filtering.

  JES2 Usage: Jobclass filtering for JES2 Initiators returns any JES2 Initiators that have the one character jobclass specified in field JPITSCLS in their list of supported job classes. Jobclass filtering is not valid if WLM group filtering is requested.

  Service class filtering for WLM initiators returns any WLM initiators that are selecting on the service class specified in field JPITSCLS. Wildcard names are supported for service class filtering. Service class filtering is not valid if JES2 group filtering is requested.

  JES3 Usage: For JES3, class filtering will only take place if JPIT1CLS is set ON and JPIT1CLW is set OFF. JES3 will only do class filtering for job classes.

  Note: JES3 accepts 8–character job classes.

JPIT1CLS
Return initiator information if one or more classes match the class name indicated by JPITSCLS.

JPIT1CLW
Interpret the class filtering as looking for either job classes or service classes (Service class filtering only allowed for JES2).

JPIT1DOM
If this bit is set ON, an authorized caller is requesting a security label dominance check for batch job data (JES2 only)

JPIT1JES
Return JES mode initiators.

JPIT1WLM
Return WLM mode initiators.

JPITGNAM
Filter field JPITGNAM might contain an Initiator group name. The bit JPIT1GRP indicates whether filter JPITGNAM is used. JES2 accepts the constant group names "JES2" and "WLM". JES3 group names are not constants. Also for JES3, wildcard names are supported.

JPITSNAM
Filter field JPITSNAM might contain an MVS System Name. Bit JPIT1NAS indicates whether the filter JPITSNAM is used. Wildcard names are supported.

Note: For JES3, the MVS System name is the same as the JES Member name.

JPITMNAM
Filter field JPITMNAM might contain a JES member name. Bit JPIT1NAM indicates whether the filter JPITMNAM is used. Wildcard names are supported.

JPITSCLS
Filter field JPITSCLS might contain a service or job class. See the descriptions for filter bits JPIT1CLS and JPIT1CLW for usage information.

JPITSTAT
Report Initiator information for only those Initiators that have the following status. If no status is specified, all initiators are reported.

JPITSDRI
Return information for initiators in the Draining state.

JPITSDRD
Return information for initiators in the Drained state.

JPITSHLI
Return information for initiators in the Halting state.

JPITSHLD
Return information for initiators in the Halted state.

JPITSINA
Return information for initiators in the Inactive state.

JPITSACT
Return information for initiators in the Active state.

JPITSSTR
Return information for initiators in the Starting state.

Note: If the caller asks to look for WLM groups (JPIT1GRP is ON and JPITGNAM is set to 'WLM'), only JPITSINA or JPITSACT can be requested.

Set all other fields in the IAZJPITD control block to binary zeros before issuing the initial IEFSSREQ macro invocation.

For the Initiator Information service function code SSJPITRS (release storage), the caller should not alter any fields in the IAZJPITD control block returned on the last SSJPITOD function call.

Output Register Information: When control returns to the caller, the general purpose registers contain:

Register	**Contents**
0	Used as a work register by the system
1	Address of the SSOB control block
2 — 13	Same as on entry to call
14	Return address
15	Return code

Return Code Information: The SSI places one of the following decimal return codes in register 15. Examine the return code to determine if the request was processed.

Return Code (Decimal)
Meaning

SSRTOK (0)
The Initiator Information services request completed. Check the SSOBRETN field for specific function information.

SSRTNSUP (4)
The subsystem specified in the SSIBSSNM field does not support the Initiator Information services function call.

SSRTNTUP (8)
The subsystem specified in the SSIBSSNM field exists but is not active.

SSRTNOSS (12)
The subsystem specified in the SSIBSSNM field is not defined to MVS.

SSRTDIST (16)
The pointer to the SSOB control block or the SSIB control block is not valid, or the function code specified in the SSOBFUNC field is greater than the maximum number of functions supported by the subsystem specified in the SSIBSSNM field.

SSRTLERR (20)
Either the SSIB control block or the SSOB control block has incorrect lengths or formats.

SSRTNSSI(24)
The SSI has not been initialized.

Output parameters: Output parameters for the function routine are:

- ITSMHDR (JES2 only)
- SSOBRETN
- SSJPRETN
- Various output data areas (mapped by IAZJPITD macro) are chained to JPITD - Initiator Information Service parameter list

ITSMHDR: System Information Header. See “System Information” on page 457 for more information.

SSOBRETN Contents: When control returns to the caller and register 15 contains a zero, the Initiator Information services function places one of the following decimal values in the SSOBRETN field:

Value (Decimal)
Meaning

SSJPOK (0)
Request successful.

SSJPERRW (4)
Request completed with possible errors, see SSJPRETN for reason code.

SSJPERRU (8)
Request cannot be completed because of user error, see SSJPRETN for reason code.

SSJPERRJ (12)
Request cannot be completed, SSJPRETN contains internal reason code.

SSJPPARM (16)
SSJP extension is in an invalid format.

- It is not an SSJP.
- The service version number is not supported.
- The SSJP is not large enough

SSJPSTOR (20)
Request cannot be processed because required storage cannot be obtained. No data can be returned to the caller.

SSJPRETN Contents: In addition to the return code in SSOBRETN, the field SSJPRETN contains the service related error or more specific information about the error. SSJPRETN can be set to one of the following values if SSOBRETN is not zero:

Value (Decimal)
Meaning

SSJPUNSF (4)
Unsupported subfunction requested.

SSJPNTDS (8)
SSJPUSER does not point to the correct control block.

SSJPUNSD (12)
Version number in the control block pointed to by SSJPUSER is not correct.

SSJPSMLE (16)
Length field in the control block pointed to by SSJPUSER is too small.

SSJPEYEE (20)
Eyecatcher in the control block pointed to by SSJPUSER is not correct.

SSJPGETM (128)
$GETMAIN failed.

SSJPSTGO (132)
STORAGE OBTAIN failed.

SSJPINVA (136)
Invalid filter arguments were specified.

SSJPGLBL (140)
Function not supported on the global (JES3 only).

JPITJ2SC (256)
User supplied group of JES2 is not valid with the service class

JPITWLJC (260)
User supplied group of WLM is not valid with the job class

JPITWLST (264)
User supplied group of WLM is not valid with a status filter other than 'Active'

JPITEYLN (268)
User provided bad storage for the Initiator Information service specific data area. Either the eyecatcher was incorrect, or the length of the data area was incorrect.

JPITJCLN (272)
User supplied jobclass for the JES2 group filter is longer than one character.

JPITSAF (276)
Internal error extracting caller's security token.

JPITINTE (280)
Internal error building system information data area.

JPITSTRE (284)
Not enough storage to return all data.

JPITDSRV (288)
Internal DSERV error.

JPITASDS (292)
ASDS not accessible.

JPITCMNE (296)
JESPLEX communication error.

Initiator Information parameter list JPITD contents: For the Initiator Information service (function code SSJPITOD), the following parameters are returned in JPITD:

Field Name	Description
JPITVERO	Subsystem version number (X'0100' for z/OS release V1R11, X'0200' for z/OS release V1R12 (JES2), X'0200' for z/OS release V1R13 (JES3)).
JPITDPTR	Pointer to the first Initiator Group data area in a chain.
JPITNIG	Number of Initiator data areas returned.
JPITMPTR	Pointer to the first system information data area.
JPITMNUM	Number of system information data areas returned.

For each initiator group that passes the filter requirements, an element is added to the chain pointed to by JPITDPTR. Each element is composed of the following sections:

DSECT Name	DSECT Description
ITGHDHDR	Initiator Group Header Section
ITGPDGRP	Initiator Group Prefix Section
ITGGDGGI	Initiator Group General Information Section

In addition to the common sections listed above, JES3 returns these additional initiator group sections:

DSECT Name
DSECT Description

IT3GDG3I
JES3 Initiator Group Information Section

IT3HDG3S
JES3 Initiator Group System Information Section will contain one or more IT3SDISY JES3 System Information Entry sections.

IT3SDISY
JES3 System Information Entry

IT3JDG3J
IT3JDG3J JES3 Initiator Group Jobclass Information Section will contain one or more IT3CD3JC JES3 Jobclass Entry sections.

IT3CD3JC
JES3 Jobclass Entry

Each Initiator Group has a chain of zero or more initiator entries. The first initiator is pointed to by field ITGHINIT in the Initiator Group Header section. A count of the number of initiators returned for the group is stored in field ITGHNINT in the Initiator Group Header section.

The data returned for each Initiator contains these sections:

DSECT Name
DSECT Description

ITIHDIHD
Initiator Header Section

ITIPDINT
Initiator Prefix Section

ITIGDIGI
Initiator General Information Section

IT2IDI2I
JES2 Initiator Information Section

IT2JDI2J
JES2 Initiator Jobclass Information Section will contain one or more of the IT2CDIJC entries.

IT2CDIJC
JES2 Jobclass Entry

The following example is a layout of the various sections of the Initiator Information output data area.

```
          INITIATOR GROUP HEADER SECTION
          +-----------------+
 ITGHDHDR │ ITGHNEXT  =-----------> POINTER TO THE NEXT
          │                 │       ITGHDHDR IN THE CHAIN.
          │ ITGHINIT  =---------+   ZERO IF END OF CHAIN.
          │ . . .           │   │
          +-----------------+   │   NOTE: JES2 will always
 ITGPDGRP │ Prefix Section  │   │         have 2 groups,
          │ . . .           │   │         one for JES2
          +-----------------+   │         and one for WLM
 ITGGDGGI │ General         │   │         initiators.
          │ Information     │   │         JES3 can have
          │ Section         │   │         multiple groups.
          | . . .          |   |
          +----------------+   |
 IT3GDG3I | Optional JES3  |   |
          | Group          |   |
          | Info Section   |   |
          | . . .          |   |
          +----------------+   |
 IT3HDG3S | Optional JES3  |   |    NOTE: # elements is
          | Group System   |   |          IT3H3SNS
          | Info Section   |   |
          | . . .          |   |
          +----------------+   |
 IT3SDISY | Optional JES3  |   |
  (1..N)  | System Info    |   |
          | Array Elements |   |
          |                |   |
          +----------------+   |
 IT3JDG3J | Optional JES3  |   |    NOTE: # elements is
          | Group Jobclass |   |          IT3JJCCT
          | Info Section   |   |
          | . . .          |   |
          +----------------+   |
 IT3CD3JC | Optional JES3  |   |
  (1..N)  | Jobclass       |   |
          | Array Elements |   |
          |                |   |
          +----------------+   |
                               |
                               |
       +-----------------------+
       |
       |
       |  INITIATOR HEADER SECTION
       +->+----------------+
 ITIHDIHD |                |
          | ITIHNEXT -------------> POINTER TO THE NEXT
          | . . .          |        ITIHDIHD IN THE CHAIN.
          |                |        ZERO IF END OF CHAIN.
          | ITIHSYSI  =-----------> Pointer to IAZJPLXI
          |                |        for this initiator.
          +----------------+
 ITIPDINT | Prefix Section |
          | . . .          |
          +----------------+
 ITIGDIGI | General Info   |
          | Section        |
          | . . .          |
          +----------------+
 IT2IDI21 | Optional JES2  |
          | Initiator Info |
          | Section        |
          | . . .          |
          +----------------+
 IT2JDI2J | Optional JES2  |
          | Initiator      |
          | Jobclass Info  |
          | Section        |
          +----------------+
IT2CDIJC  | Optional JES2  | NOTE: # of elements is
  (1..N)  | Jobclass       |       IT2JJCCT
          | Array Elements |
          |                |
          +----------------+


          SYSTEM/MEMBER INFORMATION AREA
          +----------------+
ITSMHDR  │                │
         │ ITSMNEXT -------------> POINTER TO THE NEXT
         │                │       ITSMHDR IN THE CHAIN.
         │                │       ZERO IF END OF CHAIN.
         │ ...            │
         +----------------+
JPSYSPRF │ Prefix Section │
         │ . . .          │
         +----------------+
JPSYSINF │ System Info    │
         │ Section        │
         │ . . .          │
         +--  --  --  -- -+
JPSYSIFE │ System         │ NOTE: # of elements is
 (1..N)  │ Information    │       JPSYNENT
         │ Array Elements │
         │                │
         +----------------+
```

Initiator Group Header Section: Each Initiator Group information element begins with a Group Header. This section holds an offset to the group, system and class details, and holds a pointer to the initiator section, which is a chain of the initiators that pertain to this group.

The fields in the ITGHDHDR section are:

Field Name	Description
ITGHEYE	Eyecatcher. Is set to ‘DINITGRP'.
ITGHOHDR	Offset to first group section.
ITGHNEXT	Address of the next Initiator Group Information element.
ITGHINIT	Address of the first Initiator data area for this group.
ITGHNINT	The number of initiator data areas for this group.

Initiator Group Prefix Section: This holds the length of all the information reported for this group. This length does not include the length of the Group Header section. This length does include all storage needed to report both the Group, Class and System information.

The fields in the ITGPDGRP section are:

Field Name	Description
ITGPGLEN	Length of the entire element, not including the length of the Group Header.
ITGPGTYP	Type of this section.
ITGPGMOD	Modifier for this section.

Initiator Group General Information Section: The Group Name field ITGGGAM is set to 'JES2' when JES2 is reporting its initiators, and to 'WLM' when JES2 is reporting the WLM initiators. When JES3 is reporting its initiators, this field will be set to the configured JES3 Group Name.

The fields in the ITGGDGGI section are:

Field Name	Description
ITGGLEN	Length of this section.
ITGGTYPE	Type of this section
ITGGMOD	Modifier for this section
ITGGGNAM	Group Name
ITGGFLAG	Group Flags

Bit Name	Description
ITGGWLM	ON for WLM mode initiator group OFF for JES mode initiator group

JES3 Group Information Section: This section contains general information about a JES3 group. It contains the group barrier definition, and reports if this is the JES3 default group.

The fields in the IT3GDG3I section are:

Field Name	Description
IT3GLEN	Length of this section
IT3GTYPE	Type of this section
IT3GMOD	Modifier for this section
IT3G3IBR	JES3 group barrier

Barrier	value
0-15	job priority
16	no barrier
PRTY	each job priority is a barrier

Field Name	Description
IT3GFLAG	JES3 group flag

Bit Name
Description

IT3GDEFG

ON if this is the JES3 default group

OFF if this is not the JES3 default group

JES3 Group System Information Section: This section contains an offset to the first JES3 System Information section, as well as the number of the JES3 System Information Entry sections.

The fields in the IT3HDG3S section are:

Field Name
Description

IT3HLEN
Length of this section

IT3HTYPE
Type of this section

IT3HMOD
Modifier for this section

IT3H3SOS
Offset to the first of the JES3 System Information Entry sections

IT3H3SNS
Number of JES3 System Information Entry sections

IT3H3SLS
Length of a JES3 System Information entry

JES3 System Information Entry: This section holds information about one of the systems on which the group is enabled to run.

The fields in the IT3SDISY section are:

Field Name
Description

IT3SSYSN
System Name

IT3SDICT
Count of initiators defined for this system

IT3SAICT
Count of initiators allocated for this system

IT3SUICT
Count of initiators in use for this system

IT3SFLAG
Flag Byte

Bit Name
Description

IT3SMANA
ON for Manual allocation

OFF for Dynamic Allocation

IT3SMANU
ON for Manual unallocation

OFF for Dynamic unallocation

IT3SENBS
ON - Group is enabled for scheduling on this system

OFF - Group is disabled for scheduling on this system

IT3SJSIE
Address of JPSYSIFE associated with this JES3 System Information entry.

JES3 Group Job-Class Information Section: This section contains an offset to the first JES3 Job-Class Information, as well as the number of the JES3 Job-Class Entry sections contained by this group.

The fields in the IT3JDG3J section are:

Field Name	Description
IT3JLEN	Length of this section
IT3JTYPE	Type of this section
IT3JMOD	Modifier for this section
IT3JJCOF	Offset to the first Job-Class Entry section
IT3JJCCT	Number of Job-Class Entry sections for this Group
IT3JJCLN	Length of a single Job-Class entry

JES3 Job-Class Entry: This section holds information about one of the Job-Classes contained by this Group.

The fields in the IT3CD3JC section are:

Field Name	Description
IT3CJCNM	Job-Class name
IT3CSENB	Bitmap relative to system entries in the Group System Information section. If bit is ON, Job-Class is enabled on the corresponding system.
IT3CSDEF	Bitmap relative to system entries in the Group System Information section. If bit is ON, Job-Class is defined on the corresponding system.
IT3CSEN2	Bitmap relative to JPSYSIFE system entries, which is anchored by JPITMPTR. Job-Class is enabled on the corresponding system.

IT3CSDE2
Bitmap relative to JPSYSIFE system entries, which is anchored by JPITMPTR. Job-Class is defined on the corresponding system.

Initiator Header Section: Each individual Initiator Information section begins with a header section. This section holds an offset to the start of the detailed initiator information, as well as a pointer to the next initiator defined for the group.

The fields in the ITIHDIHD section are:

Field Name
Description

ITIHIEYE
Eyecatcher. Is set to‘DINITDTA’.

ITIHOHDR
Offset to the prefix section

ITIHNEXT
Address of the next individual initiator information section.

ITIHSYSI
Address of JPSYSIFE for this initiator.

Initiator Prefix Section: This section holds the combined length of all the sections needed to report information about an individual initiator.

The fields in the ITIPDINT section are:

Field Name
Description

ITIPILEN
Combined length of the individual initiator sections. This does not include the length of the header section.

ITIPITYP
Type of this section

ITIPIMOD
Modifier for this section

Initiator General Information Section: This section holds general information about an individual initiator.

The fields in the ITIGDIGI section are:

Field Name
Description

ITIGIILN
Length of this section

ITIGIITY
Type of this section

ITIGIIMD
Modifier for this section

ITIGASID
Address Space Identifier for the initiator job

ITIGSTAT
Initiator Status flag

Bit Value	**Description**
ITIGIDRI	Draining
ITIGDDRD	Drained
ITIGIHLI	Halting
ITIGIHLD	Halted
ITIGIINA	Inactive
ITIGIACT	Active
ITIGISTR	Starting

ITIGMVSN
MVS System name

ITIGSID
JES Member name

The following fields are associated with the currently active batch job in the initiator:

ITIGJNAM
Job name from the job card

ITIGJBID
Job ID of the batch job

ITIGOWNR
User ID from the job card

ITIGSTEP
Job step name

ITIGPRSN
Procedure step name

ITIGSECL
SECLABEL for the address space

ITIGJCLS
Job class

ITIGSCLS
If the currently active job is JES managed, this is the service class of that job. If the job is WLM managed, this is the service class the WLM Initiator is currently selecting on.

Note: Information on the job that is currently active on the initiator is only returned if the SSI caller is authorized to access data for the job, specifically, if the caller's security label dominates the security label of the job.

JES2 Initiator Information Section: This information is not available for WLM managed initiators.

The fields in the IT2IDI2I section are:

Field Name	**Description**
IT2ILEN	Length of this section
IT2ITYPE	Type of this section
IT2IMOD	Modifier for this section
IT2IITID	Initiator partition identifier
ITIITJI	Initiator job identifier

JES2 Initiator Job-Class Information Section: This information is not available for WLM managed initiators. Field IT2JJCOS is the offset to the first job-class entry section, and field IT2JJCCT indicates the number of job-class entries. The length of these entries is stored in IT2JJCLN, and these entries follow immediately after this section.

The fields in the IT2JDI2J section are:

Field Name	**Description**
IT2JLEN	Length of this section
IT2JTYPE	Type of this section
IT2JMOD	Modifier for this section
ITJJCOS	Offset to the first job-class entry
ITJJCCT	Number of job-class entries
ITJJCLN	Length of a single job-class entry

JES2 Job-Class Entry: Each JES2 Initiator can support multiple job classes.

The fields in the IT2CDIJC section are:

Field Name	**Description**
IT2CJCNM	Job class or job class group name
IT2CFLAG	Flag byte

Bit Name	Description
IT2CJCWY	ON if the job class is WLM eligible; OFF if the job class is not WLM eligible
IT2CJGRP	ON if **IT2CJCNM** is a job class group name; OFF if it is a job class name

JESPLEX Information

The JESPLEX Information service provides detailed information about the characteristics of each of the systems or members in a JESPLEX. These characteristics include the name, current status, last start type, and operating system level of each of the systems or members.

See the following sections for more information about JESPLEX Information:
- "Type of Request"
- "Use Information"
- "Issued to"
- "Related SSI Codes"
- "Related Concepts"
- "Environment"
- "Input Register Information" on page 309
- "Input Parameters" on page 310
- "Output Register Information" on page 313
- "Return Code Information" on page 313
- "Output Parameters" on page 314

Type of Request: Directed SSI Call.

Use Information: To use the JES property information services SSI, callers must first decide the function they want to perform. The appropriate parameter list must be obtained and pointed to by SSJPUSER.

Issued to: A JES subsystem (either primary or secondary). The subsystem does not have to be associated with the requesting address space.

Related SSI Codes: None.

Related Concepts: None.

Environment: The caller (issuer of the IEFSSREQ macro) must include the following mapping macros:
- CVT
- IEFJESCT

Data areas commonly referenced are mapped by the following mapping macros:
- IEFSSOBH
- IEFJSSIB
- IAZSSJP
- IAZJPLEX (JESPLEX Information)

The caller must meet the following requirements:

Caller variable	Caller value
Minimum Authorization	Problem state, any PSW key
Dispatchable unit mode	Task
AMODE	24-bit or 31-bit
Cross memory mode	PASN=HASN=SASN
ASC mode	Primary
Interrupt status	Enabled for I/O and external interrupts
Locks	No locks held
Control Parameters	The SSOB, SSIB, IAZSSJP, and IAZJPLEX, control blocks can be in 24- or 31-bit virtual storage
Recovery	The caller should provide an ESTAE-type recovery environment. See *z/OS MVS Programming: Assembler Services Guide* for more information about an ESTAE-type recovery environment.

Figure 26 shows the environment at the time of the call for SSI function code 82, JESPLEX Information Subfunction.

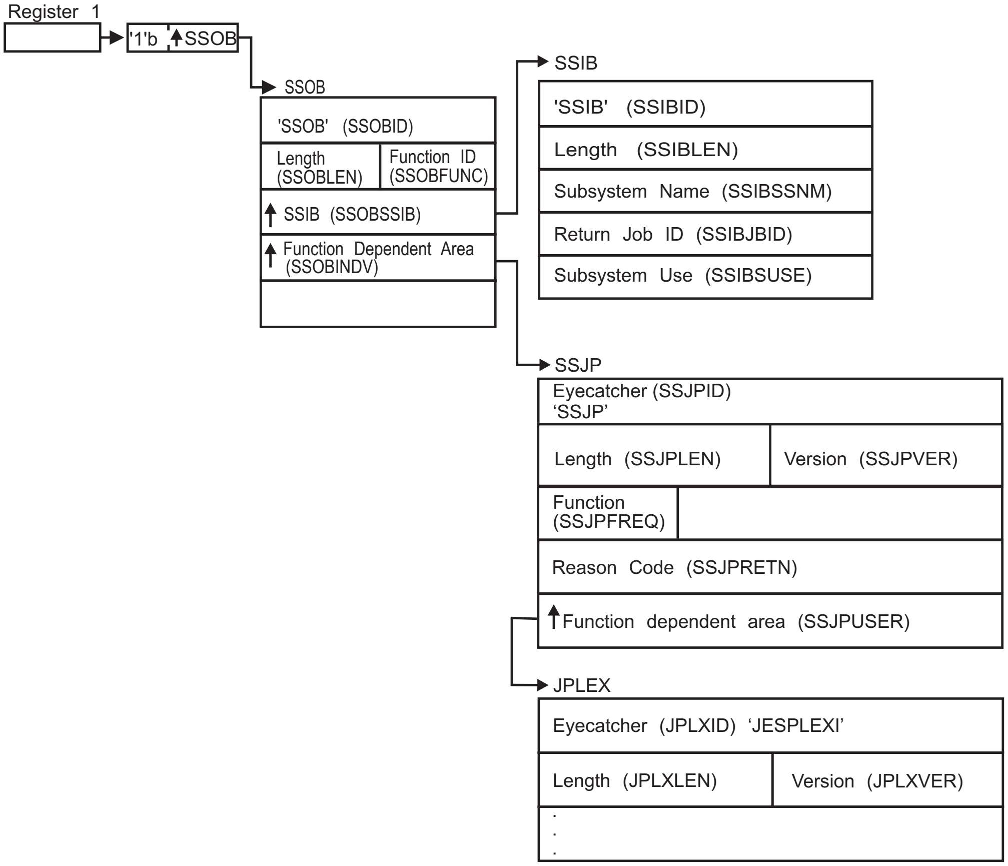
Register 1
'1'b
SSOB
SSOB
'SSOB' (SSOBID)
Length (SSOBLEN)
Function ID (SSOBFUNC)
SSIB (SSOBSSIB)
Function Dependent Area (SSOBINDV)
SSIB
'SSIB' (SSIBID)
Length (SSIBLEN)
Subsystem Name (SSIBSSNM)
Return Job ID (SSIBJBID)
Subsystem Use (SSIBSUSE)
SSJP
Eyecatcher (SSJPID) 'SSJP'
Length (SSJPLEN)
Version (SSJPVER)
Function (SSJPFREQ)
Reason Code (SSJPRETN)
Function dependent area (SSJPUSER)
JPLEX
Eyecatcher (JPLXID) 'JESPLEXI'
Length (JPLXLEN)
Version (JPLXVER)
.
.
.

Figure 26. Environment at Time of Call for SSI Function Code 82, JESPLEX Information Subfunction

Input Register Information: Before issuing the IEFSSREQ macro, the caller must ensure that the following general purpose registers contain:

Register
Contents

1	Address of a 1-word parameter list that has the high-order bit on and a pointer to the SSOB control block in the low-order 31 bits.
13	Address of a standard 18-word save area.

Input Parameters: Input parameters for the function routine are:
- SSOB
- SSIB
- IAZSSJP
- IAZJPLEX (JESPLEX Information)

SSOB Contents: The caller sets the following fields in the SSOB control block on input:

Field Name	Description
SSOBID	Identifier 'SSOB'
SSOBLEN	Length of the SSOB (SSOBHSIZ) control block
SSOBFUNC	SSI function code 82 (SSOBSSJP)
SSOBSSIB	Address of the SSIB control block or zero (if this field is zero, the life-of-job SSIB is used). See “Subsystem Identification Block (SSIB)” on page 8 for more information about the life-of-job SSIB
SSOBINDV	Address of the function-dependent area (IAZSSJP control block)

Set all other fields in the SSOB control block to binary zeros before issuing the IEFSSREQ macro.

SSIB Contents: If you do not use the life-of-job SSIB, the caller must provide an SSIB and set the following fields in the SSIB control block on input:

Field Name	Description
SSIBID	Identifier 'SSIB'
SSIBLEN	Length of the SSIB (SSIBSIZE) control block
SSIBSSNM	Subsystem name — name of the subsystem to which this JESPLEX Information Services request is directed.

Set all other fields in the SSIB control block to binary zeros before issuing the IEFSSREQ macro.

IAZSSJP Contents: The caller must set the following fields in the IAZSSJP control block on input:

Field Name
Description

SSJPID
Eyecatcher for the control block (set to 'SSJP')

SSJPLEN
Length of the IAZSSJP (SSJPSIZE) control block

SSJPVER
Input version of the IAZSSJP control block. Set to SSJPVER1 for version 1 of the control block or to SSJPVERC for the current version of the control block.

SSJPFREQ
Function to be performed on this request. Valid functions and their related SSJPUSER area are:

Field Value	Description
SSJPJXOD	IAZJPLEX JESPLEX Information service, obtain data
SSJPJXRS	IAZJPLEX JESPLEX Information service, release storage

SSJPUSER
Pointer to service specific data area '(IAZJPLEX)'

Set all other fields in the IAZSSJP control block to binary zeros before issuing the IEFSSREQ macro.

JESPLEX Information service, IAZJPLEX contents: For the JESPLEX Information service (function code SSJPJXOD), the caller must set the following fields in the IAZJPLEX control block:

Field Name	Description
JPLXID	Eyecatcher of the control block (set to 'JESPLEXI')
JPLXLEN	Length of the IAZJPLEX (JPLXSZE) control block
JPLXVER	Input version of the IAZJPLEX control block. Set to JPLXSVR# for the current (latest) version.
JPLXSTRP	Storage management anchor for use by the subsystem that responds to this request. It is expected that the caller will set this field to zero the first time IAZJPLEX is used and from that point on the field will be managed by the subsystem.

The caller can also set the following fields in the IAZJPLEX control block on input to limit (or select) which data will be returned. If no filters are specified, all data will be returned. If any filters are specified, at least one of the filter conditions in each of the separate filters must be matched before data will be returned.

Field Name
Description

JPLXFLTR
Flag byte for filtering results. Each bit corresponds to a filter condition that must be matched before data is returned.

Bit Value
Description

JPLXFSNM
Filter on the MVS system name specified in the field JPLXSNAM

JPLXFMNM
Filter on the JES member name specified in the field JPLXMNAM

JPLXSTS1
Flag byte to filter on Status. Each bit corresponds to a filter condition. This filter will be matched if at least one of the specified filter conditions is met.

Bit Value
Description

JPLDRAIN
Return JESPLEX information only if the system or member is in a Drained or Down state.

JPLINTZ
Return JESPLEX information only if the system or member is in an Initializing state (JES2 Only)

JPLXACTV
Return JESPLEX information only if the system or member is in an Active state

JPLXDRING
Return JESPLEX information only if the system or member is in a Draining state (JES2 Only)

JPLOUDEF
Omit undefined members (JES2 Only)

JPLNATCH
Return JESPLEX information only if the system or member is in a Not Attached state (JES3 Only)

JPLXSPEC
Flag byte to filter on JES Specific values. Each bit corresponds to a filter condition. This filter will be matched if at least one of the specified filter conditions is met.

Bit Value
Description

JPLXINDP
Return JESPLEX information only if the system or member is Independent (JES2 Only)

JPLXBOSS
Return JESPLEX information only if the system or member is BOSS (JES2 Only)

JPLXPRIM
Return JESPLEX information only if the system or member is the Primary Subsystem (JES2 Only)

JPLXGLOB
Return JESPLEX information only if the system is the Global system (JES3 Only)

JPLXLOCL
Return JESPLEX information only if the system is a Local system (JES3 Only)

JPLXSNAM
MVS System Name filter.

JPLXMNAM
MVS Member Name filter.

Note: For JES3, the member name is the same as the system name.

Set all other fields in the IAZJPLEX control block to binary zeros before issuing the initial IEFSSREQ macro invocation.

For the JESPLEX Information service function code SSJPJXRS (release storage), the caller should not alter any fields in the IAZJPLEX control block returned on the last SSJPJXOD function call.

Output Register Information: When control returns to the caller, the general purpose registers contain:

Register	**Contents**
0	Used as a work register by the system
1	Address of the SSOB control block
2 — 13	Same as on entry to call
14	Return address
15	Return code

Return Code Information: The SSI places one of the following decimal return codes in register 15. Examine the return code to determine if the request was processed.

Return Code (Decimal)
Meaning

SSRTOK (0)
The JESPLEX Information services request completed. Check the SSOBRETN field for specific function information.

SSRTNSUP (4)
The subsystem specified in the SSIBSSNM field does not support the JESPLEX Information services function call.

SSRTNTUP (8)
The subsystem specified in the SSIBSSNM field exists but is not active.

SSRTNOSS (12)
The subsystem specified in the SSIBSSNM field is not defined to MVS.

SSRTDIST (16)
The pointer to the SSOB control block or the SSIB control block is not

valid, or the function code specified in the SSOBFUNC field is greater than the maximum number of functions supported by the subsystem specified in the SSIBSSNM field.

SSRTLERR (20)
Either the SSIB control block or the SSOB control block has incorrect lengths or formats.

SSRTNSSI(24)
The SSI has not been initialized.

Output Parameters: Output parameters for the function routine are:

- SSOBRETN
- SSJPRETN
- IAZJPLEX (JESPLEX Information service)

SSOBRETN Contents: When control returns to the caller and register 15 contains a zero, the JESPLEX Information services function places one of the following decimal values in the SSOBRETN field:

Value (Decimal)
Meaning

SSJPOK (0)
Request successful.

SSJPERRW (4)
Request completed with possible errors. See SSJPRETN for reason code.

SSJPERRU (8)
Request cannot be completed because of user error. See SSJPRETN for reason code.

SSJPERRJ (12)
Request cannot be completed; SSJPRETN contains internal reason code.

SSJPPARM (16)
The parameter list, that is the SSJP extension is an invalid format - it is not an SSJP, the service version number is not supported, or the SSJP is not large enough.

SSJPSTOR (20)
Request cannot be processed because required storage cannot be obtained. No data can be returned to the caller.

SSJPRETN Contents: In addition to the return code in SSOBRETN, the field SSJPRETN contains the service related error or more specific information about the error. SSJPRETN can be set to one of the following values if SSOBRETN is not zero:

Value (Decimal)
Meaning

SSJPUNSF (4)
Unsupported subfunction requested.

SSJPNTDS (8)
SSJPUSER does not point to the correct control block.

SSJPUNSD (12)
Version number in the control block pointed to by SSJPUSER is not correct.

SSJPSMLE (16)
Length field in the control block pointed to by SSJPUSER is too small.

SSJPEYEE (20)
Eyecatcher in the control block pointed to by SSJPUSER is not correct.

SSJPGETM (128)
$GETMAIN failed.

SSJPSTGO (132)
STORAGE OBTAIN failed.

SSJPINVA (136)
Invalid filter arguments were specified.

SSJPGLBL (140)
Function not supported on the global (JES3 only).

JPLXINVA (132)
Invalid search arguments

JPLXINV1 (136)
Status filter invalid

JPLXINV2 (140)
System name filter invalid

JPLXINV3 (144)
Member name filter invalid

JPLXINV4 (148)
JES Specific filter invalid

JESPLEX Information service, IAZJPLEX contents: For the JESPLEX Information service (function code SSJPJXOD), the following parameters are returned in IAZJPLEX:

Field Name	Description
JPLXVERO	Subsystem version number (currently X'0200')
JPLXLPTR	Pointer to first Member data buffer
JPLXNMBR	Number of Member data buffers returned
JPLXTRKT	Total number of SPOOL tracks defined across all partitions
JPLXTRKU	Total number of SPOOL tracks used across all partitions
JPLXTRAT	Total number of active SPOOL tracks defined across all partitions.
JPLXTRAU	Total number of active SPOOL tracks used across all partitions.

For each system or member that passes the filter requirements, an element is added to the chain pointed to by JPLXLPTR. Each element is composed of the following sections:

DSECT Name	DSECT Description
JPXHDR	JESPLEX Header Section
JPXPREF	JESPLEX Prefix Section
JPXGENI	JESPLEX General Information Section
JPXJES3I	JESPLEX JES3 Specific Information Section
JPXJES2I	JESPLEX JES2 Specific Information Section
JPXCPERF	JESPLEX Command Prefix Information
JPXCPRFE	JESPLEX Command Prefix Array Entry

The following example is a layout of the various sections of the JESPLEX Information output data area. The basic layout is a chain of JESPLEX Information sections. Each JESPLEX section has a common section and a subsystem specific section.

```
          JESPLEX INFO SECTION
          +-----------------+
   JPXHDR | JPXNXTP   =-----------> POINTER TO THE NEXT
          |                 |       JPXHDR IN THE CHAIN.
          |                 |       ZERO IF END OF CHAIN.
          +-----------------+
  JPXPREF | Prefix Section  |
          | . . .           |
          +-----------------+
  JPXGENI | General         |
          | JESPLEX Data    |
          | Section         |
          | . . .           |
          +-----------------+
 JPXJES3I | Optional JES3   |
          | JESPLEX         |
          | Info Section    |
          | . . .           |
          +-----------------+
 JPXJES2I | Optional JES2   |
          | JESPLEX         |
          | Info Section    |
          | . . .           |
          +-----------------+
 JPXCPREF | Command prefix  |
          | array section   |
          | . . .           |
          +-----------------+
```

JESPLEX Header Section: Each JESPLEX information element begins with a header section. There can be multiple JESPLEX Areas returned. The JPXNXTP pointer is used to navigate to the next JESPLEX Header section in the chain.

The fields in the JPXHDR section are:

Field Name
Description

JPXEYE
Eyecatcher. Should be set to ‘JPXHDR’.

JPXOPRF
Offset to the prefix section

JPXNXTP
Address of the next JESPLEX information element

JESPLEX Prefix Section: This section holds the length of all the information reported for one of the JESPLEX members. This length does not include the length of the JESPLEX Header section. For addressability to this section, add the JPXOPRF header field to the header (JPXHDR) address.

The fields in the JPXPREF section are:

Field Name
Description

JPXPRLN
Length of the entire element, not including the JESPLEX header section

JPXPRTP
Type of this section.

JPXPRMD
Modifier for this section.

JESPLEX General Information Section: This section holds details that are common to both JES2 and JES3. To get addressability to this section, add the JPXOPRF header field and the prefix size (JPXPRSZ) to the header (JPXHDR) address.

The fields in the JPXGENI section are:

Field Name
Description

JPXGLN
Length of this section.

JPXGTY
Type of this section

JPXGMD
Modifier for this section

JPXSBSNM
Subsystem name

JPXSTIME
Last start date and time in STCK format

JPXSTAT1
Member status

Field Value
Description

JPXDRAIN
Drained or Down member

JPXINITZ
Initializing (JES2 Only)

JPXACTIV
Active member

JPXDRING
Draining member (JES2 Only)

JPXNATCH
Not Attached (JES3 Only)

JPXSTATC
Character string representation of the member status

JPXMVSNM
MVS system name

JPXMEMNM
JES member name

JPXVERSN
Product version in character format

JPXSMFID
SMF identifier

JPXSYSLG
Syslog indicator flag

Field Value	Description
JPXSLOGY	Release 11 syslog support is Active for this member

JPXMEMNO
Member number (JES2 Only)

JPXSTPE
Type of last start

Field Value	Description
JPXCOLD	Cold start
JPX2COLF	Cold start with format (JES2 Only)
JPXWARM	Warm start
JPX2SRMS	Single member warm start (JES2 Only)
JPX3WRMD	Warm start to replace a spool dataset (JES3 Only)
JPX3WRMA	Warm start with analysis (JES3 Only)
JPX3WDA	Warm start to replace a spool dataset with analysis (JES3 Only)

  - **JPXHOT**
    Hot start
  - **JPX3HOTR**
    Hot start with refresh (JES3 Only)
  - **JPX3HOTA**
    Hot start with analysis (JES3 Only)
  - **JPX3HTRA**
    Hot start with refresh and analysis (JES3 Only)
  - **JPX2QUICK**
    Quick start (JES2 Only)
  - **JPX3LCL**
    Local start (JES3 Only)

JPXPRODL
Product level in binary format

JPXSERVL
Service level in binary format

JESPLEX JES3 Specific Information Section: This section holds details that are specific to JES3. To get addressability to this section, add the prefix offset (JPXOPRF), the prefix size (JPXPRSZ), and the general information section size (JPXGLN) to the header (JPXHDR) address.

The fields in the JPXJES3I section are:

Field Name	**Description**
JPX3LN	Length of this section
JPX3TY	Type of this section
JPX3MD	Modifier for this section
JPX3GCON	Last global contact time in STCK format
JPX3TRK1	Primary track group allocation
JPX3TRK2	Secondary track group allocation
JPX3WTOL	WTO message limit
JPX3WTOI	WTO message interval in seconds
JPX3CSA	PBUF CSA limit
JPX3AUX	PBUF JES3AUX limit

JPX3FIX
Fixed PBUFs

JPX3USR
User pages per open SYSOUT dataset

JPX3SELM
Selection mode constant

JPX3SP1
Spool partition name

JPX3MPFX
Message prefix

JPX3MDST
Message destination

JPX3FLG1
Flag byte

Bit Value
Description

JPX3GBL
Global node

JPX3ONL
Online

JPX3FLSH
Flushed

JPX3CNN
Connected

JPX3NCNN
Not connected

JPX3DOWN
Down

JPX3ATT
Attached

JPX3NATT
Not attached

JESPLEX JES2 Specific Information Section: This section holds details that are specific to JES2. To get addressability to this section, add the prefix offset (JPXOPRF), the prefix size (JPXPRSZ), and the general information section size (JPXGLN) to the header (JPXHDR) address.

The fields in the JPXJES2I section are:

Field Name
Description

JPX2LN
Length of this section

JPX2TY
Type of this section

JPX2MD
Modifier for this section

JPX2FLG1
JES2 indicators

Bit Value	Description
JPX21IND	Independent mode
JPX21BOS	BOSS indicator
JPX21PRI	Primary subsystem indicator

JPX2ITIM
Time of last checkpoint access

JPX2FLG2
Current command being processed indicator

Bit Value	Description
JPX21P	$P command
JPX21PXQ	$PXEQ command

JPX2HOLD
Current setting for MASDEF HOLD

JPX2MIND
Current setting for MASDEF MIN DORMANCY

JPX2MAXD
Current setting for MASDEF MAX DORMANCY

JPX2SYNC
Current setting for MASDEF SYNCTOL

JPX2AHLD
Actual HOLD value on the last checkpoint

JPX2ADRM
Actual DORMANCY value on the last checkpoint

JPX2RSID
Name of the member doing the reset

JPX2STAT
Specific Status Indictor

Bit Value	Description
JPX2DOWN	DOWN
JPX2DEF	DEFINED

JPX2INU
INUSE

JPX2FAIL
FAILED

JPX2UNDF
Member UNDEFINED

JPX2UPND
Member UNDEFINED-PENDING

JPX2ACTV
Member ACTIVE

JPX2INAC
Member TERMINATED

JPX2INIT
Member INITIALIZING

JPX2TERM
Member TERMINATING

JPX2JESF
Member JES2-FAILED

JPX2XCFF
Member JESXCF-FAILED

JPX2MVSG
Member MVS-GONE

JPX2DORM
Member DORMANT

JPX2DRAN
Member DRAINED

JPX2ALIC
Member awaiting ALICE processing

JPX2STA2
Second status byte

Bit Value	Description
JPX2EDEL	Member deleted
JPX2$IND	Member in independent mode
JPX2SIOT	SPIN IOT being purged
JPX2NMAL	Member has two checkpoint data sets allocated
JPX2EGON	XCF system gone
JPX2PRIM	Member is a primary subsystem

JPX2SPLX
Command prefix has SYSplex scope

JESPLEX Command Prefix Information: This section acts as a header to the array of command prefix entries.

This section follows immediately after the JES2 or JES3 specific section depending on whether JES2 or JES3 implementation.

This is a variable length section. The length depends upon the number of command prefix entries. JES2 will have only one entry. JES3 might have up to 14 entries.

The fields in the JPXCPREF section are:

Field Name	Description
JPXCLN	Length of this section
JPXCTY	Type of this section
JPXCMD	Modifier for this section
JPXPRXC	Count of command prefix array entries
JPXFPXL	Length of each command prefix array entry
JPXPFXO	Offset to the first command prefix array entry

JESPLEX Command Prefix Array Entry: This section maps out the individual entries in the command prefix array. To get addressability to this array, add the prefix offset (JPXOPRF), the prefix size (JPXPRSZ), the general information section size (JPXGENSZ), the sizes of any optional sections supplied, and the array offset (JPXPFXO) to the header (JPXHDR) address.

The fields in the JPXCPRFE section are:

Field Name
Description

JPXCPFXS
Scope Flags

Field Value	Description
JPXCSYSP	SYSPLEX Scope
JPXCSYST	System Scope

JPXCPFXP
Command prefix value

Job Class Information

The Job Class Information service provides information about the attributes of JES job classes. Information can be obtained on all JES job classes or filters can be supplied to limit which job classes are returned. Information is returned as a chained list of data areas, each representing a JES job class.

See the following sections for more information about Job Class Information:
- "Type of Request"
- "Use Information"
- "Issued to"
- "Related SSI Codes"
- "Related Concepts"
- "Environment"
- "Input Register Information" on page 325
- "Input Parameters" on page 325
- "Output Register Information" on page 328
- "Return Code Information" on page 328
- "Output Parameters" on page 329

Type of Request: Directed SSI Call.

Use Information: To use the JES property information services SSI, callers must first decide the function they want to perform. The appropriate parameter list must be obtained and pointed to by SSJPUSER.

Issued to: A JES subsystem (either primary or secondary). The subsystem does not have to be associated with the requesting address space.

Related SSI Codes: None.

Related Concepts: None.

Environment: The caller (issuer of the IEFSSREQ macro) must include the following mapping macros:
- CVT
- IEFJESCT

Data areas commonly referenced are mapped by the following mapping macros:
- IEFSSOBH
- IEFJSSIB
- IAZSSJP
- IAZJPCLS (Job Class Information)

The caller must meet the following requirements:

Caller variable	Caller value
Minimum Authorization	Problem state, any PSW key
Dispatchable unit mode	Task
AMODE	24-bit or 31-bit
Cross memory mode	PASN=HASN=SASN
ASC mode	Primary
Interrupt status	Enabled for I/O and external interrupts
Locks	No locks held

Caller variable	**Caller value**
Control Parameters	The SSOB, SSIB, IAZSSJP, and IAZJPCLS, control blocks can be in 24- or 31-bit virtual storage
Recovery	The caller should provide an ESTAE-type recovery environment. See *z/OS MVS Programming: Assembler Services Guide* for more information about an ESTAE-type recovery environment.

Figure 27 shows the environment at the time of the call for SSI function code 82, Job Class Information Subfunction.

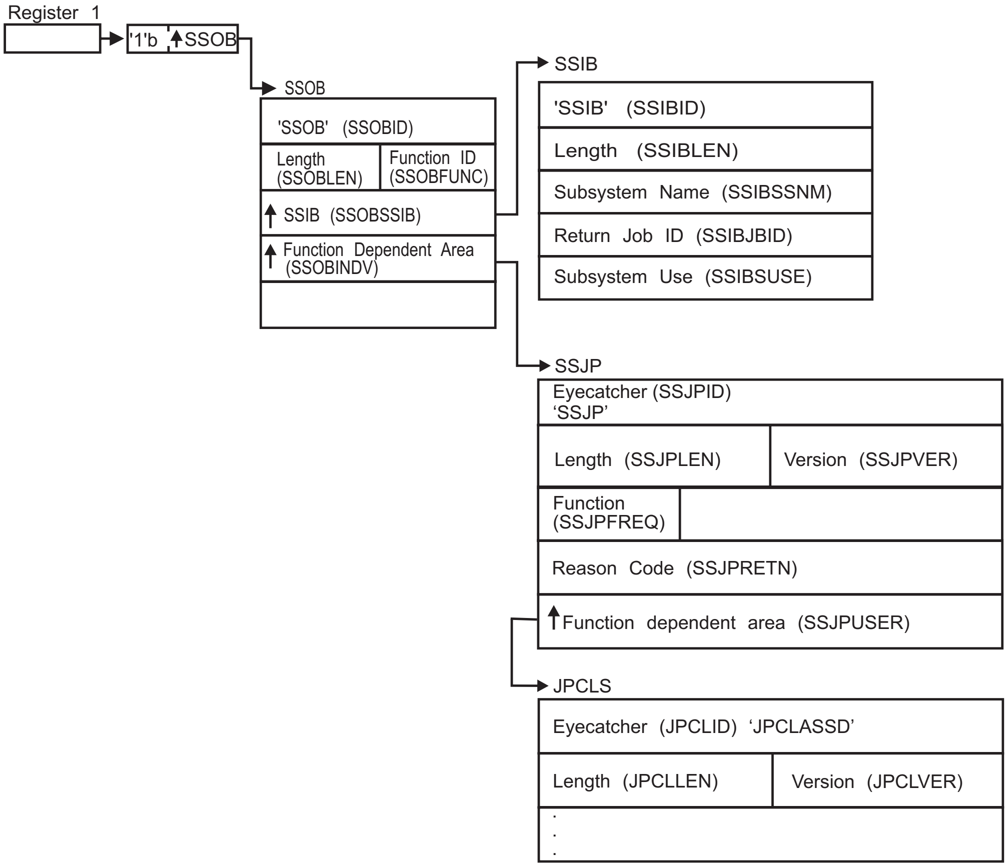
Register 1
'1'b
SSOB
SSOB
'SSOB' (SSOBID)
Length (SSOBLEN)
Function ID (SSOBFUNC)
SSIB (SSOBSSIB)
Function Dependent Area (SSOBINDV)
SSIB
'SSIB' (SSIBID)
Length (SSIBLEN)
Subsystem Name (SSIBSSNM)
Return Job ID (SSIBJBID)
Subsystem Use (SSIBSUSE)
SSJP
Eyecatcher (SSJPID) 'SSJP'
Length (SSJPLEN)
Version (SSJPVER)
Function (SSJPFREQ)
Reason Code (SSJPRETN)
Function dependent area (SSJPUSER)
JPCLS
Eyecatcher (JPCLID) 'JPCLASSD'
Length (JPCLLEN)
Version (JPCLVER)
.
.
.

Figure 27. Environment at Time of Call for SSI Function Code 82, Job Class Information Subfunction

Input Register Information: Before issuing the IEFSSREQ macro, the caller must ensure that the following general purpose registers contain:

Register	**Contents**
1	Address of a 1-word parameter list that has the high-order bit on and a pointer to the SSOB control block in the low-order 31 bits.
13	Address of a standard 18-word save area.

Input Parameters: Input parameters for the function routine are:

- SSOB
- SSIB

- IAZSSJP
- IAZJPCLS (Job Class Information)

SSOB Contents: The caller sets the following fields in the SSOB control block on input:

Field Name
Description

SSOBID
Identifier 'SSOB'

SSOBLEN
Length of the SSOB (SSOBHSIZ) control block

SSOBFUNC
SSI function code 82 (SSOBSSJP)

SSOBSSIB
Address of the SSIB control block or zero (if this field is zero, the life-of-job SSIB is used). See "Subsystem Identification Block (SSIB)" on page 8 for more information about the life-of-job SSIB.

SSOBINDV
Address of the function-dependent area (IAZSSJP control block)

Set all other fields in the SSOB control block to binary zeros before issuing the IEFSSREQ macro.

SSIB Contents: If you do not use the life-of-job SSIB, the caller must provide an SSIB and set the following fields in the SSIB control block on input:

Field Name
Description

SSIBID
Identifier 'SSIB'

SSIBLEN
Length of the SSIB (SSIBSIZE) control block

SSIBSSNM
Subsystem name: name of the subsystem to which this JESPLEX Information Services request is directed.

Set all other fields in the SSIB control block to binary zeros before issuing the IEFSSREQ macro.

IAZSSJP Contents: The caller must set the following fields in the IAZSSJP control block on input:

Field Name
Description

SSJPID
Eyecatcher for the control block (set to 'SSJP')

SSJPLEN
Length of the IAZSSJP (SSJPSIZE) control block

SSJPVER
Input version of the IAZSSJP control block. Set to SSJPVER1 for version 1 of the control block or to SSJPVERC for the current version of the control block.

SSJPFREQ
Function to be performed on this request. Valid functions and their related SSJPUSER area are:

Field Value
Description

SSJPJCOD
IAZJPCLS Job Class Information service, obtain data

SSJPJCRS
IAZJPCLS Job Class Information service, release storage

SSJPUSER
Pointer to service specific data area '(IAZJPCLS)'

Set all other fields in the IAZSSJP control block to binary zeros before issuing the IEFSSREQ macro.

Job Class Information service, IAZJPCLS contents: For the Job Class Information service (function code SSJPJCOD), the caller must set the following fields in the IAZJPCLS control block:

Field Name
Description

JPCLID
Eyecatcher of the control block (set to 'JPCLASSD')

JPCLLEN
Length of the IAZJPCLS (JPCLSZE) control block

JPCLVER
Input version of the IAZJPCLS control block. Set to JPCLV010 for version 1 of the control block. Set to JPCLVER# for the current (latest) version

JPCLSTRP
Storage management anchor for use by the subsystem that responds to this request. It is expected that the caller will set this field to zero the first time IAZJPCLS is used and from that point on the field will be managed by the subsystem.

The caller can also set the following fields in the IAZJPCLS control block on input to limit (or select) which data will be returned.

Field Name
Description

JPCLFLG1
Flag byte which describes which filters to use to limit or select the data to be returned. Each bit corresponds to a filter that must be matched before data is returned.

Bit Value
Description

JPCL1CLS
Return job class information for those job classes that match the class name indicated by JPCLCNAM.

JPCL1GRP
Filters on a job class group.

JPCLGNAM
The group name to filter on.

Set all other fields in the IAZJPCLS control block to binary zeros before issuing the initial IEFSSREQ macro invocation.

For the Job Class Information service function code SSJPJCRS (release storage), the caller should not alter any fields in the IAZJPCLS control block returned on the last SSJPJCOD function call.

Output Register Information: When control returns to the caller, the general purpose registers contain:

Register	**Contents**
0	Used as a work register by the system
1	Address of the SSOB control block
2 -13	Same as on entry to call
14	Return address
15	Return code

Return Code Information: The SSI places one of the following decimal return codes in register 15. Examine the return code to determine if the request was processed.

Return Code (Decimal)	**Meaning**
SSRTOK (0)	The Job Class Information services request completed. Check the SSOBRETN field for specific function information.
SSRTNSUP (4)	The subsystem specified in the SSIBSSNM field does not support the Job Class Information services function call.
SSRTNTUP (8)	The subsystem specified in the SSIBSSNM field exists but is not active.
SSRTNOSS (12)	The subsystem specified in the SSIBSSNM field is not defined to MVS.
SSRTDIST (16)	The pointer to the SSOB control block or the SSIB control block is not valid, or the function code specified in the SSOBFUNC field is greater than the maximum number of functions supported by the subsystem specified in the SSIBSSNM field.
SSRTLERR (20)	Either the SSIB control block or the SSOB control block has incorrect lengths or formats.

SSRTNSSI(24)
The SSI has not been initialized.

Output Parameters: Output parameters for the function routine are:

- SSOBRETN
- SSJPRETN
- IAZJPCLS (Job Class Information service)

SSOBRETN Contents: When control returns to the caller and register 15 contains a zero, the Job Class Information services function places one of the following decimal values in the SSOBRETN field:

Value (Decimal)
Meaning

SSJPOK (0)
Request successful.

SSJPERRW (4)
Request completed with possible errors. See SSJPRETN for reason code.

SSJPERRU (8)
Request cannot be completed because of user error. See SSJPRETN for reason code.

SSJPERRJ (12)
Request cannot be completed; SSJPRETN contains internal reason code.

SSJPPARM (16)
The parameter list, that is the SSJP extension is an invalid format

- It is not an SSJP
- The service version number is not supported
- The SSJP is not large enough

SSJPSTOR (20)
Request cannot be processed because required storage cannot be obtained. No data can be returned to the caller.

SSJPRETN Contents: In addition to the return code in SSOBRETN, the field SSJPRETN contains the service related error or more specific information about the error. SSJPRETN can be set to one of the following values if SSOBRETN is not zero:

Value (Decimal)
Meaning

SSJPUNSF (4)
Unsupported subfunction requested.

SSJPNTDS (8)
SSJPUSER does not point to the correct control block.

SSJPUNSD (12)
Version number in the control block pointed to by SSJPUSER is not correct.

SSJPSMLE (16)
Length field in the control block pointed to by SSJPUSER is too small.

SSJPEYEE (20)
Eyecatcher in the control block pointed to by SSJPUSER is not correct.

SSJPGETM (128)
$GETMAIN failed.

SSJPSTGO (132)
STORAGE OBTAIN failed.

Job Class Information service, IAZJPCLS contents: For the Job Class Information service (function code SSJPJCOD), the following parameters are returned in IAZJPCLS:

Field Name	Description
JPCLVERO	Subsystem version number (currently 1)
JPCLDPTR	Pointer to first Class data buffer
JPCLNCLS	Number of Class data buffers returned.

For each job class that passes the filter requirements, an element is added to the chain pointed to by JPCLDPTR. Each element is composed of the following sections:

DSECT Name	DSECT Description
CLSHDR	Job Class Header Section
CLSPREF	Job Class Prefix Section
CLSGENI	Job Class General Information Section

In addition to the common sections listed above, JES2 returns these additional job class sections:

DSECT Name	DSECT Description
CLSJES2I	JES2 Job Class Information Section

In addition to the common sections listed above, JES3 returns these additional job class sections:

DSECT Name	DSECT Description
CLSJES3I	JES3 Job Class Information will contain zero or more of the JES3 TLIMIT Entry entries.
CLS3TLIM	JES3 TLIMIT Entry

Each job class has a chain of zero or more member entries. The first member is pointed to by field CLSFRSTM in the Job Class Header section. Each member element is composed of the following sections:

DSECT Name
: **DSECT Description**

CLMHDR
: Job Class Member Header Section

CLMPREF
: Job Class Member Prefix Section

CLMGENI
: Job Class Member General Information Section

JES3 returns these additional job class member sections:

DSECT Name
: **DSECT Description**

CLMJES3I
: JES3 Job Class Member Information will contain zero or more of the JES3 MLIMIT entries.

CLM3MLIM
: JES3 MLIMIT Entry

The following is a layout of the various sections of the Job Class Information output data area.

```
         CLASS INFO SECTION
         +----------------+
  CLSHDR | CLSNXTP   =-----------> POINTER TO THE NEXT
         |                |        CLSHDR IN THE CHAIN.
         | CLSFRSTM  =--------+    ZERO IF END OF CHAIN.
         |                |   |
         +----------------+   |
 CLSPREF | Prefix Section |   |
         |                |   |
         +----------------+   |
 CLSGENI | General        |   |
         | Class Info     |   |
         | Section        |   |
         |                |   |
         +----------------+   |
CLSJES2I | Optional JES2  |   |  NOTE: Included if JES2
         | Class Info     |   |
         | Section        |   |
         |                |   |
         +----------------+   |
CLSJES3I | Optional JES3  |   |  NOTE: Included if JES3
         | Class Info     |   |
         | Section        |   |
         |                |   |
         +----------------+   |
CLS3TLIM | Optional JES3  |   |  NOTE: Number of elements
 (0..N)  | TLIMIT Array   |   |        specified in
         | Elements       |   |        CLS3TLCT.
         |                |   |
         +----------------+   |
                              |
                              |
      +-----------------------+
      |
      |
      |  CLASS MEMBER INFO SECTION
      +->+----------------+
  CLMHDR |                |
         | CLMNXTM -------------> POINTER TO THE NEXT
         |                |        CLMHDR IN THE CHAIN.
         +----------------+        ZERO IF END OF CHAIN.
 CLMPREF | Prefix Section |
         |                |
         +----------------+
 CLMGENI | General Member |
         | Info Section   |
         |                |
         +----------------+
CLMJES3I | Optional JES3  | NOTE: Included if JES3
         | Member Info    |
         | Section        |
         |                |
         +----------------+
CLM3MLIM | Optional JES3  | NOTE: Number of elements
 (0..N)  | MLIMIT Array   |       specified in CLM3MLCT.
         | Elements       |
         |                |
         +----------------+
```

Job Class Header Section: Each Job Class information element begins with a Header which holds an eyecatcher, an offset to the prefix section, a pointer to the next job class, and a pointer to the member section, which is a chain of the members that pertain to this job class.

The fields in the CLSDHR section are:

Field Name	Description
CLSID	Eyecatcher. Should be set to 'CLASSHDR'.
CLSOPRF	Offset to prefix section.
CLSNXTP	Address of the next Job Class Information element.
CLSFRSTM	Address of the first Member section for this job class.

Job Class Prefix Section: This section holds the length of all the information reported for this job class. This length does not include the length of the Job Class Header section. This length does include all storage needed to report the General and JES2 or JES3 Job Class information.

The fields in the CLSPREF section are:

Field Name	Description
CLSPRLN	Length of the entire element, not including the Job Class Header.
CLSPRTP	Type of this section.
CLSPRMD	Modifier for this section.

Job Class General Information Section: This section contains job class attributes that are common for JES2 and JES3.

The fields in the CLSGENI section are:

Field Name
: **Description**

CLSGLN
: Length of this section

CLSGTY
: Type of this section

CLSGMD
: Modifier for this section

CLSGNAME
: Class name

CLSGFLG1
: Class flag 1

  Bit Value
  : **Description**

  CLSG1WLM
  : Class is in WLM mode

  CLSG1JRN
  : No journal option

  CLSG1LRC
  : JOBRC=LASTRC was specified for this class.

  CLSG1NAC
  : Job class is not active.

CLSGREST
: Restart options

  Bit Value
  : **Description**

  CLSGRCAN
  : Print output, then cancel the job (JES3 only)

  CLSGRHLD
  : Hold the job (JES3 only)

  CLSGRPRT
  : Print output, then hold the job (JES3 only)

  CLSGRSTR
  : Allow warmstart to re-queue to Execution Phase

CLSGJFLG
: JESLOG default settings

  Bit Value
  : **Description**

  CLSGELIG
  : Spin eligible

  CLSGTIMI
  : Spin on time interval

  CLSGTIMD
  : Spin on time of day

CLSGLINE
Spin upon line delta

CLSGSUP
Suppress

CLSGNOSP
No spin

CLSGJVAL
Spin value. This is the number of seconds in the interval if CLSGJFLG is set to CLSGTIMI. This is the number of seconds past midnight if CLSGJFLG is set to CLSGTIMD. This is the number of lines if CLSGJFLG is set to CLSGLINE.

CLSGMAXJ
Maximum number of concurrently executing jobs of this class (TDEPTH for JES3 if specified).

CLSGCURJ
Current number of concurrently executing jobs of this class.

CLSGQSIZ
Number of jobs of this class that are eligible for execution (awaiting job selection) (JES2 only).

CLSGHELD
Number of jobs of this class that are held (JES2 only).

CLSGGRP
The job class group that the current job class is in.

JES2 Job Class Information Section: This section contains job class attributes that are unique to JES2.

The fields in the CLSJES2I section are:

Field Name
Description

CLS2LN
Length of this section

CLS2TY
Type of this section

CLS2MD
Modifier for this section

CLS2JBFL
Job class flag

Bit Value
Description

CLS2BCH
Batch job

CLS2TSU
Time sharing user

CLS2STC
Started task

CLS2NOUT
No output option

CLS2TYPR
TYPRUN setting

Bit Value	Description
CLS2HOLD	TYPRUN = HOLD
CLS2SCAN	TYPRUN = SCAN
CLS2COPY	TYPRUN = COPY

CLS2CACT
Accounting information

Bit Value	Description
CLS2CSWA	SWA above 16M line
CLS2CNUM	Account number required
CLS2CNAM	Programmer name required
CLS2CNON	No information required
CLS2CALL	Account number and programmer name required

CLS2CTIM
Default for job time limit

Field Name	Description
CLS2CMNT	Maximum minutes
CLS2CSEC	Maximum seconds

CLS2CREG
Default for job step region

Field Name	Description
CLS2CRGN	Numeric specification
CLS2CRGA	Kilobyte or megabyte specification

CLS2CMND
Command disposition

Field Value	Description
CLS2CEXE	Pass the command through
CLS2CDSP	Display and then pass the command
CLS2CVER	Ask operator disposition
CLS2CIGN	Ignore the command

CLS2CBLP
Bypass label processing

Bit Value	Description
CLS2CBLY	Process bypass label parameter

CLS2COCG
Operator command group

Bit Value	Description
CLS2CGSY	Group 1 commands (SYS)
CLS2CGIO	Group 2 commands (I/O)
CLS2CGCO	Group 3 commands (CONS)
CLS2CGAL	All command groups

CLS2CJCL
Default MSGLEVEL, JCL listing if not MSGLEVEL

CLS2CMSG
Allocation termination messages value of MSGLEVEL

CLS2JOPT
Job options flag

Bit Value	Description
CLS2NLOG	No joblog indicator
CLS2XBMI	XBM II job class
CLS2QHLD	Class queue is held

CLS2XBM
Procedure name for XBM II jobs

CLS2PRCN
Procedure library number

CLS2SMF
SMF flags

Bit Value
Description

CLS2NUSO
Do not take IEFUSO exit

CLS2NTY6
Do not produce Type 6 SMF record

CLS2NUJP
Do not take IEFUJP exit

CLS2NT26
Do not produce Type 26 SMF record

CLS2PERF
Default performance group

CLS2DMCL
Default message class, TSU and STC classes only

CLS2FLG1
Normal output disposition for JES data sets

Bit Value
Description

CLS21CDP
Conditionally purge output for jobs in this class

CLS21NOP
NORMAL OUTDISP=PURGE

CLS21NOW
NORMAL OUTDISP=WRITE

CLS21NOH
NORMAL OUTDISP=HOLD

CLS21NOK
NORMAL OUTDISP=KEEP

CLS21NOL
NORMAL OUTDISP=LEAVE

CLS2FLG2
Abnormal output disposition for JES data sets

Bit Value
Description

CLS22AOP
ABNORMAL OUTDISP=PURGE

CLS22AOW
ABNORMAL OUTDISP=WRITE

CLS22AOH
ABNORMAL OUTDISP=HOLD

CLS22AOK
ABNORMAL OUTDISP=KEEP

CLS22AOL
ABNORMAL OUTDISP=LEAVE

CLS2FLG3
Processing flags

Bit Value
Description

CLS23SPC
Special class (STC/TSU)

CLS23SNV
Default SCHENV (CLS2SCHE) no longer defined to WLM

CLS23DOK
Duplicate job names OK for this job class

CLS2SCHE
Default SCHENV

JES3 Job Class Information Section: This section contains job class attributes that are unique to JES3.

The fields in the CLSJES3I section are:

Field Name
Description

CLS3LN
Length of this section, including the variable length TLIMIT information.

CLS3TY
Type of this section

CLS3MD
Modifier for this section

CLS3GRP
Job class group name

CLS3PART
Spool partition name

CLS3TRK1
Primary track group allocation

CLS3TRK2
Secondary track group allocation

CLS3SDEP
SDEPTH setting

CLS3PTY
JES3 priority

CLS3FLG1
Flag byte

Bit Value
Description

CLS31DEF
Default class

CLS3JOPT

Bit Value
Description

CLS3NLOG
Suppress JESMSG

CLS3LOG
Log JESMSG

CLS3TLOF
Offset to first JES3 TLIMIT entry

CLS3TLCT
JES3 TLIMIT entry count

CLS3TLSI
Size of a JES3 TLIMIT entry

JES3 TLIMIT Entry: This section contains the JES3 TLIMIT information for the job class.

The fields in the CLS3TLIM section are:

Field Name
Description

CLS3TCLS
Controlling class name

CLS3TMAX
Maximum jobs in controlling class

CLS3TCUR
Current jobs in controlling class

Job Class Member Header Section: Each Job Class member information element begins with a Header which holds an eyecatcher, an offset to the prefix section, and a pointer to the next member section.

The fields in the CLMDHR section are:

Field Name
Description

CLMID
Eyecatcher. Should be set to 'CLASSMBR'.

CLMOPRF
Offset to prefix section.

CLMNXTM
Address of the next Job Class Member Information element.

Job Class Member Prefix Section: This section holds the length of all the information reported for this member. This length does not include the length of the Job Class Member Header section. This length does include all storage needed to report the General and JES3 Job Class Member information.

The fields in the CLMPREF section are:

Field Name
Description

CLMPRLN
Length of the entire element, not including the length of the Job Class Member Header.

CLMPRTP
Type of this section.

CLMPRMD
Modifier for this section.

Job Class Member General Information Section: This section contains the member information that is common between JES2 and JES3.

The fields in the CLMGENI section are:

Field Name
Description

CLMGLN
Length of this section.

CLMGTY
Type of this section.

CLMGMD
Modifier for this section.

CLMGMNAM
Member name

CLMGSNAM
MVS System name

CLMGFLG1
Flag byte

Bit Value
Description

CLMG1ENB
Class is enabled or active on the member

CLMG1ACT
Member is active

CLMG1PXQ
Class is on halted member, $PXEQ issued (JES2 only)

CLMG1DRN
Class is on draining member (JES2 only)

CLMG1DEF
Class is defined on member (JES3 only)

CLMGJMAX
Maximum job count for this class on member (MDEPTH for JES3 if specified)

CLMGJCUR
Current active job count for this class on member

JES3 Job Class Member Information Section: This section contains the member information that is unique to JES3.

The fields in the CLMJES3I section are:

Field Name	Description
CLM3LN	Length of this section, including the variable length MLIMIT information
CLM3TY	Type of this section
CLM3MD	Modifier for this section
CLM3SELM	Selection mode name
CLM3MLOF	Offset to first JES3 MLIMIT entry
CLM3MLCT	JES3 MLIMIT entry count
CLM3MLSI	Size of a JES3 MLIMIT entry

JES3 MLIMIT Entry: This section contains the JES3 MLIMIT information for the member.

The fields in the CLM3MLIM section are:

Field Name	Description
CLM3MCLS	Controlling class name
CLM3MMAX	Maximum jobs in controlling class
CLM3MCUR	Current jobs in controlling class

JES device information services — SSI function code 83

JES device information services (SSI function code 83) allow an application program to obtain information on devices managed by JES.

The JES device information interface has a JESPLEX scope – information on all devices managed by all members of a JESPLEX is available to an application program running on any system in a JESPLEX.

The interface has extensive filtering capabilities that allow an application program to subset device information by attribute values such as device type, name, and operational state, and by which a JESPLEX member manages the devices.

Requesting device information services processing

All data structures used by the JES device information SSI are mapped by the IAZSSJD macro. The names of data structures and fields referenced below can be found in this macro, unless otherwise indicated.

The primary data structure used for communication with the JES device information interface is a parameter list (SSJD structure). Fields in the parameter list are differentiated as input and output fields. Input fields are used by an application program to provide detailed information upon request, such as options and device selection filters. On return from the call to the JES device information SSI, output fields of the parameter list contain the information that allows access to device data returned by the interface. Actual data structures, which contain device information, are located in the storage areas managed by the interface.

Considerations for 64-bit addressable virtual storage: The JES device information service optionally supports returning device data in 64-bit addressable virtual storage (see option SSJDPD64 in the SSJDPOPT field). A caller must be in 24 or 31-bit addressing mode when making a call to the IEFSSREQ macro. However, a caller might request that device data is returned in interface-controlled storage areas, located above the bar and only addressable through 64-bit address.

To access this data, a caller must switch to 64-bit addressing mode after the call to the IEFSSREQ macro and operate appropriately with the 64-bit pointers embedded in the data. Note that a caller running in 64-bit addressing mode can also access any data returned in 31-bit addressable storage (below the bar) using 64-bit pointers, although 64-bit mode is not required to do so.

JES device information services request types

The JES device information services support two request types (SSJDFREQ field):

- Data retrieval request (function code SSJDOBTD)

  This request returns device information according to options and filters specified in the parameter list. Device information is returned in the storage, allocated and managed by the interface. Repeated requests of this type without intervening calls to release storage will add more device information to the information returned by the prior calls.
- Release storage request (function code SSJDRSTG)

  This request clears results of the prior data retrieval requests and releases all storage areas managed by the interface.

Type of request: Directed SSI Call.

Use information: To use the JES property information services SSI, callers must meet the following requirements:

- Prepare Subsystem Options Block Header (SSOB).
- Allocate parameter list (SSJD) and place its address in the SSOBINDV field of SSOB.
- Set parameter list eyecatcher, length and version fields. See the description below.
- Decide a request to perform and place the code in the SSJDFREQ field.
- If necessary, fill in additional options and filters in the parameter list. See the description below.
- Invoke the IEFSSREQ macro to make a call to the interface.
- Analyze the return code and data returned by the interface.

Issued to: A JES subsystem (either primary or secondary). The subsystem does not have to be associated with the requesting address space.

Related SSI Codes: None.

Related Concepts: None.

Environment: The caller (issuer of the IEFSSREQ macro) must include the following mapping macros:

- CVT
- IEFJESCT

Data areas that are commonly referenced are mapped by the following mapping macros:

- IEFSSOBH
- IEFJSSIB
- IAZSSJD

The caller must meet the following requirements:

Caller variable	Caller value
Minimum Authorization	Problem state, any PSW key
Dispatchable unit mode	Task
AMODE	24-bit or 31-bit
Cross memory mode	PASN=HASN=SASN
ASC mode	Primary
Interrupt status	Enabled for I/O and external interrupts
Locks	No locks held
Control Parameters	The SSOB, SSIB, IAZSSJD control blocks can reside in 24 or 31-bit virtual storage
Recovery	The caller should provide an ESTAE-type recovery environment. See *z/OS MVS Programming: Assembler Services Guide*for more information about an ESTAE-type recovery environment.

Figure 28 on page 344 shows the environment at the time of the call for SSI function code 83, the JES device information services.

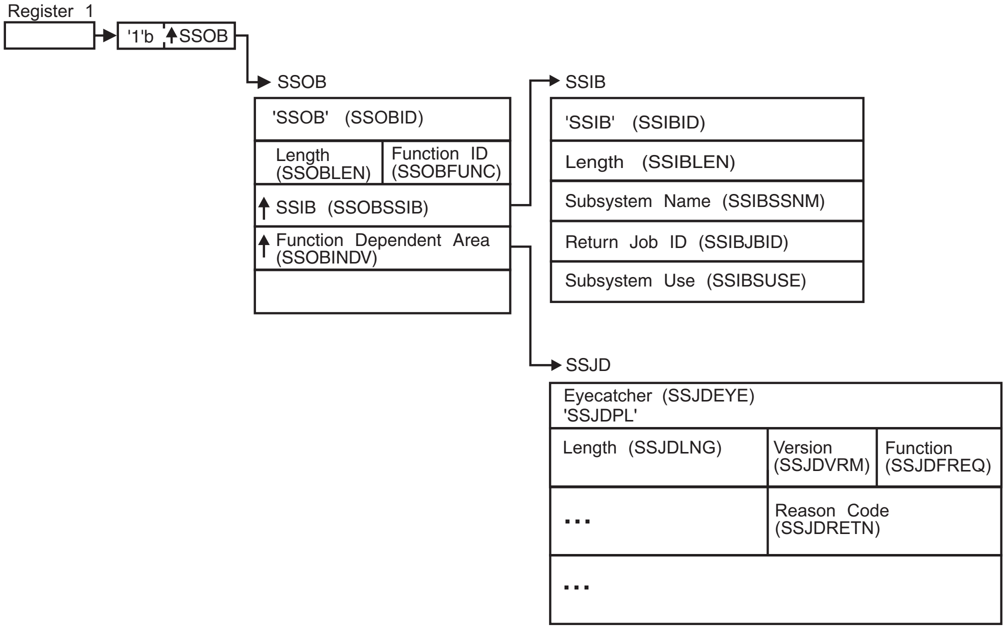
Register 1
'1'b
SSOB
SSOB
'SSOB' (SSOBID)
Length (SSOBLEN)
Function ID (SSOBFUNC)
SSIB (SSOBSSIB)
Function Dependent Area (SSOBINDV)
SSIB
'SSIB' (SSIBID)
Length (SSIBLEN)
Subsystem Name (SSIBSSNM)
Return Job ID (SSIBJBID)
Subsystem Use (SSIBSUSE)
SSJD
Eyecatcher (SSJDEYE) 'SSJDPL'
Length (SSJDLNG)
Version (SSJDVRM)
Function (SSJDFREQ)
...
Reason Code (SSJDRETN)
...

Figure 28. Environment at time of call for SSI Function Code 83, the JES device information services

Input register information: Before issuing the IEFSSREQ macro to start the JES device information services, the caller must ensure that the following general purpose registers contain:

Register	Contents
1	Address of a 1-word parameter list that has the high-order bit on and a pointer to the SSOB control block in the low-order 31 bits.
13	Address of a standard 18-word save area.

Input Parameters: Input parameters for the JES information services routine are:

- SSOB
- SSIB
- IAZSSJD

SSOB Contents: The caller sets the following fields in the SSOB control block on input:

Field Name	Description
SSOBID	Identifier 'SSOB'
SSOBLEN	Length of the SSOB control block (SSOBHSIZ)
SSOBFUNC	SSI function code 83 (SSOBSSJD)
SSOBSSIB	Address of the SSIB control block or zero (if this field is zero, the life-of-job SSIB is used). See “Subsystem Identification Block (SSIB)” on page 8 for more information about the life-of-job SSIB.

SSOBINDV
Address of the function-dependent area (IAZSSJD)

Set all other fields in the SSOB control block to binary zeros before issuing the IEFSSREQ macro.

SSIB Contents: If you do not use the life-of-job SSIB, the caller must provide an SSIB and set the following fields in the SSIB control block on input:

Field Name	Description
SSIBID	Identifier 'SSIB'
SSIBLEN	Length of the SSIB control block (SSIBSIZE)
SSIBSSNM	Subsystem name: name of the JES subsystem to which this Device Information Services request is directed

Set all other fields in the SSIB control block to binary zeros before issuing the IEFSSREQ macro.

IAZSSJD Contents: Before the first use, the caller should set all fields in the parameter list (IAZSSJD) to binary zeroes. Also, when requesting function code SSJPRSTG (release storage), the caller should not alter any output fields in the parameter list (SSJD) returned on the prior calls to SSJDOBDT (obtain data). Failure to do so might result in a storage leak. On input, the caller must set the following fields in the IAZSSJD structure (parameter list):

Field Name
Description

SSJDEYE
Eyecatcher for the parameter list (must be set to 'SSJDPL')

SSJDLNG
Length of the parameter list (SSJDSIZE)

SSJDVRM
Version of the parameter list, supplied by the caller. This is a two-byte field, which combines version and modifier. Use the SSJDVRMC constant to set this field to the most current version defined in the IASSSJD macro.

SSJDFREQ
Function to be performed on this request. Valid values of SSJDFREQ are:

Field Value
Description

SSJDOBTD
The obtain device data function returns device data in the storage managed by the SSI for that purpose. This function can be called as many times as needed. Each successive call will add more data to the output, unless the SSJDPRLS option is used to release storage.

SSJDRSTG
Release interface-managed storage. This function will release

storage used by the data returned by the SSI, ignoring all options and filters in the SSI parameter list.

SSJDSTRP
Storage management anchor for use by the subsystem that responds to this request. It is expected that the caller will set this field to zero when the first time parameter list is used. And from that point, the field will be managed by the subsystem.

The JES device information services provide a number of processing options and selection filters, which impact the way the returned information is presented and allow to subset the returned device information according to a number of criteria.

If no filters are specified by the caller, all available device information is returned. If any filters are specified, at least one of the filter conditions in each of the separate filters must be matched before data will be returned.

Implicit OR is performed between filters in the same filter group. For example, if SSJDFLT1 (device status filter) is set to SSJD1ACT in addition to SSJD1INA, the SSI will return data for all active devices in addition to data for all inactive devices.

Implicit AND is performed between filters in the different filter groups. For example, if SSJDFLT1 (device status filter) is set to SSJD1ACT and SSJDFLT6 is set to SSJD6NAM (device name filter), the SSI will return only those active devices that also have names, matching the name selection filter.

If a filter is not recognized or does not apply, it will not have an impact on the result of the SSI call. For example, JES3-only filters will not have impact on the SSI output from JES2.

Field Name
Description

SSJDPOPT
Processing options:

Bit Value
Description

SSJDPRLS
Release storage used by old data before returning new data.

SSJDPD64
Return data in 64-bit virtual private storage (above the bar). If the caller's job is prevented by the job attributes to allocate storage above the bar (see MEMLIMIT parameter on JOB JCL statement), the interface will allocate storage in the 31-bit virtual private storage (below the bar). If this option is not selected, the data is always returned in the 31-bit virtual private storage (below the bar).

SSJDPDMC
Perform security label dominance check. In order for the caller to obtain device data, the caller's security label should dominate the security label of the device. Otherwise, the device is invisible to the caller. This check is always performed for non-authorized callers. This option is only valid for JES2.

SSJDPOP2
Processing options (2):

Bit Value
Description

SSJDP2AD
Return additional data (line, logon or NETSRV device) with remote WS and NJE connection

SSJDP2NF
Apply name filter (see SSJD6NAM) to NJE connections rather than devices of other types

SSJDP2SD
Return all subdevices for the selected device regardless of filtering (applies to offloads, lines and NJE connections)

SSJDFOPT
Output formatting options:

Bit Value
Description

SSJDFLIN
"Line view" data for remote workstations and NJE connections is arranged according to lines that are used to access them. To access "line view" data, use the SSJDLIN8/SSJDLINP pointer. Otherwise, data is arranged according to device type or class; to access this data, use pointers other than SSJDLIN8/SSJDLINP.

SSJDFDRM
Destination filter (see SSJD9DST) should also be checked against remote number for remote print/punch devices and against device number for local print/punch devices. This option is only valid for JES2.

The SSJD1CHR and SSJDZOMO fields can be used to specify the EBCDIC wildcard characters for selection strings that support wildcards. If SSJD1CHR and SSJDZOMO are not specified (both set to hex zeroes), the default wildcard characters are ? (question mark) for SSJD1CHR and * (asterisk) for SSJDZOMO. For example, if either value is specified, both of the provided values are used even if one value is hex zero. It is an error to specify equal values for SSJD1CHR and SSJDZOMO, unless the equal values are hex zeroes.

SSJD1CHR
Wildcard character - matches one character.

SSJDZOMO
Wildcard character - matches 0 or more characters.

Device status filter group includes all filters in SSJDFLT1 and SSJDFLT2 (see descriptions of device statuses).

SSJDFLT1
Filter by device status (1):

Bit Value
Description

SSJD1ACT
Select active devices

SSJD1INA
Select inactive devices

SSJD1HOT
Select printers with hot writer (JES3)

SSJD1DRG
Select draining devices

SSJD1DRN
Select drained devices (JES2) or offline devices (JES3)

SSJD1NRM
Composite (multi-bit) value for status filter - select devices in a "normal" state. Devices in this state are available to process work

SSJDFLT2
Filter by device status (2):

Bit Value
Description

SSJD2STE
Select startable devices

SSJD2STG
Select starting devices

SSJD2HTD
Select halted devices

SSJD2PAU
Select paused devices

SSJD2HTG
Select halting devices

SSJD2INT
Select devices requiring intervention or attention

SSJD2PRB
Composite (multi-bit) value for status filter selects devices in a "problem" state. Devices in this state might require operator attention.

SSJD2NRS
Select unresponsive devices

SSJD2END
Select devices with processors ended due to error (JES2)

Device type filter group includes all filters in SSJDFLT3 and SSJDFLT4:

Field Name
Description

SSJDFLT3
Filter by device type (1):

Bit Value
Description

SSJD3PRT
Select printers

SSJD3PUN
Select punches

SSJD3RDR
Select readers

SSJD3CON
Select consoles

SSJD3JXM
Select job transmitters

SSJD3JRC
Select job receivers

SSJD3SXM
Select SYSOUT transmitters

SSJD3SRC
Select SYSOUT receivers

SSJD3XMT
Composite device type filter–select all transmitters

SSJD3RCV
Composite device type filter–select all receivers

SSJDFLT4
Filter by device type (2):

Bit Value
Description

SSJD4LIN
Select line devices

SSJD4LGN
Select logon devices

SSJD4NSV
Select NETSRV devices

SSJD4OFL
Select OFFLOAD devices

SSJD4NJE
Select NJE connections

Device class filter group includes all filters in SSJDFLT5.

Attention: Do not use SSJDFLT5 to filter for line devices. If any combination of SSJDFLT5 bits are selected other than all off or all on, lines will not be returned.

Field Name
Description

SSJDFLT5
Filter by device class:

Bit Value
Description

SSJD5LCL
Select local devices

SSJD5RMT
Select remote devices

SSJD5OFL
Select OFFLOAD devices (transmitters and receivers)

SSJD5NJE
Select NJE devices (transmitters and receivers)

SSJD5IFC
Select interface devices (logon and NETSRV devices)

Remaining filters are independent and are not combined in filter groups. (There is an implicit AND relationship between these filters.)

Field Name
Description

SSJDFLT6
Device attribute filters:

Bit Value
Description

SSJD6NAM
Select by device name (see SSJDDVNM)

SSJD6DGN
Select by device group name (see SSJDDGNM) (JES3)

SSJD6SYS
Select by owning system name (see SSJDSYSN)

SSJD6MBR
Select by owning member name (see SSJDMBRN)

SSJD6LIN
Select by related line name (see SSJDLNNM) (JES2)

Note that if none of the system/member selection filters (SSJD6SYS and SSJD6MBR) are specified, data is only returned for the local JESPLEX member (for example, the subsystem that processes the SSI call). To see data for other JESPLEX members, some selection through these filters must be specified. For example, to obtain data for all members in the current JESPLEX, set SSJD6SYS bit on and set value of SSJDSYSN to “match all” wildcard selection. For JES3, information is always reported by the global system.

The following filters only apply to specific device types, which support the relevant attribute. Applying these filters to other devices will not impact the result. For example, if a device type filter is used to select punches, specifying JES-mode printer filter will not have any effect on the result.

Field Name
Description

SSJDFLT7
Filters which only apply to specific device types (1):

Bit Value
Description

SSJD7RWN
Select remote devices by remote workstation name (see SSJDRWNM)

SSJD7NJN
Select NJE devices by adjacent node name (see SSJDADJN) (JES2)

SSJD7NJA
Select SNA NJE connections by SNA application name (see SSJDAPNM) (JES2)

SSJD7NJK
Select TCP NJE connections by TCP socket name (see SSJDSKNM) (JES2)

SSJD7NJB
Select remote and NJE devices connected via BSC

SSJD7NJS
Select remote and NJE devices connected via SNA

SSJD7NJT
Select remote and NJE devices connected via TCP/IP

SSJDFLT8
Filters that only apply to specific device types (2):

Bit Value
Description

SSJD8JES
Select JES mode printers

SSJD8FSS
Select FSS mode printers

SSJDFLT9
Filters that only apply to specific device types (3) - filter by attributes used in the work selection criteria in effect for a device:

Bit Value
Description

SSJD9CLS
Select by output class name in the work selection criteria (see SSJDWSCL)

SSJD9FRM
Select by form name in the work selection criteria (see SSJDWSFM)

SSJD9JBN
Select by job name in the work selection criteria (see SSJDWSJN)

SSJD9DST
Select by destination ID in the work selection criteria (see SSJDWSDS). Also see option SSJDFDRM in SSJDFOPT.

SSJD9WRT
Select by writer name in the work selection criteria (see SSJDWSWR)

SSJD9PRM
Select by processing mode in the work selection criteria (see SSJDWSPR)

SSJDFLTZ
Filters that only apply to specific device types (4) - filter by attributes of the work unit currently processed by a device:

Bit Value	**Description**
SSJDZJOB	Select by name of the job currently processed by a device (see SSJDAJOB)
SSJDZCRT	Select by name of the owner of the job currently processed, or by name of creator of the SYSOUT dataset currently processed by a device (see SSJDACRT)

The following fields provide actual selection values for filters that are requested by the filter selection flags described above.

Device name filter consists of two parts:
- Single name filter (SSJDDVNM). This part supports wildcards.
- Name range list filter (SSJDDVNA and SSJDDVN#). This part does not support wildcards.

The device will pass the device name filter if it matches any of these two parts. Both parts of the device name filter are controlled by the same bit (SSJD6NAM in SSJDFLT6).

Name range list is specified by a pointer to a list (SSJDDVNA) and the number of elements in the list (SSJDDVN#). Each element in the list is a pair of 10-character device names that define a range of device names. To disable the single name filter (SSJDDVNM), set this field to blank. To disable the name range list filter, set the pointer (SSJDDVNA) or the number of elements (SSJDDVN#) to binary zero. For example, one way to select devices with the name R1.PR1 and devices with the names in the range of PRT100-PRT200 is to set single name filter (SSJDDVNM) to 'R1.PR1' (this will match a single device name), and create a list with one element - a pair of values 'PRT100' and 'PRT200' (this will match a range of device names).

The function of the device name filter is independent of the device type and the device class filters. There is an implicit OR relationship between the device name filter and the type and class filters. For example, if the device name filter is set to select devices with name 'PRT5*', SSJD3PRT is set to select printers, and SSJD5RMT is set to select remote devices, the interface will return all remote printers and any other device that matches 'PRT5*'.

Field Name	**Description**
SSJDDVNM	Single device name for selection. This field supports wildcards (used with SSJD6NAM)
SSJDDVNA	Pointer to device name range list (used with SSJD6NAM)
SSJDDVN#	Number of elements in the device name range list (used with SSJD6NAM)

Device group name filter is supported by JES3 and consists of two parts:
- Single group name filter (SSJDDGNM). This part supports wildcards.
- Group name range list filter (SSJDDGNA and SSJDDGN#). This part does not support wildcards.

JES3 device group will pass the filter if it matches any of these two parts. Both parts of the device group name filter are controlled by the same bit (SSJD6DGN in SSJDFLT6).

Group name range list is specified by a pointer to a list (SSJDDGNA) and number of elements in the list (SSJDDGN#). Each element in the list is a pair of 8-character device group names that define a range of device group names.

To disable the single name part of the filter (SSJDDGNM), set this field to blank.

To disable the name range list part of the filter, set pointer (SSJDDGNA) or the number of elements (SSJDDGN#) to binary zero.

For example, to select devices with the device group name DGRP1 and devices with the device group names in the range of DGRP100-DGRP200, set a single name filter (SSJDDGNM) to 'DGRP1' (this will match a single device group), and create a list with one element - a pair of values 'DGRP100' and 'DGRP200' (this will match a range of device group names).

Field Name	Description
SSJDDGNM	Single device group name for selection. This field supports wildcards. (used with SSJD6DGN)
SSJDDGNA	Pointer to device group name range list. (used with SSJD6DGN)
SSJDDGN#	Number of elements in the device group name range list. (used with SSJD6DGN)

More selection values for filters:

Field Name	Description
SSJDSYSN	System name for selection (used with SSJD6SYS in SSJDFLT6). This field supports wildcards.
SSJDMBRN	Member name for selection (used with SSJD6MBR in SSJDFLT6). This field supports wildcards.
SSJDLNNM	Line name for selection (used with SSJD6LIN in SSJDFLT6). This field supports wildcards.
SSJDRWNM	Remote workstation name for selection (used with SSJD7RWN in SSJDFLT7). This field supports wildcards.
SSJDADJN	Adjacent node name for selection (used with SSJD7NJN in SSJDFLT7). This field supports wildcards.
SSJDAPNM	SNA application name for selection (used with SSJD7NJA in SSJDFLT7). This field supports wildcards.

SSJDSKNM
TCP socket name for selection (used with SSJD7NJK in SSJDFLT7). This field supports wildcards.

SSJDWSCL
Output class name for selection (used with SSJD9CLS in SSJDFLT9). This field supports wildcards.

SSJDWSFM
Form name for selection (used with SSJD9FRM in SSJDFLT9). This field supports wildcards.

SSJDWSJN
Job name for selection (used with SSJD9JBN in SSJDFLT9). This field supports wildcards.

SSJDWSDS
Single destination name for selection. This field supports wildcards.

SSJDWSWR
Writer name for selection (used with SSJD9WRT in SSJDFLT9). This field supports wildcards.

SSJDWSPR
Processing mode for selection (used with SSJD9PRM in SSJDFLT9). This field supports wildcards.

SSJDAJOB
Name of the job currently processed by device (used with SSJDZJOB in SSJDFLTZ). This field supports wildcards.

SSJDACRT
Owner of the job that is currently processed by device or creator of SYSOUT dataset that is currently processed by device (used with SSJDZCRM in SSJDFLTZ). This field supports wildcards.

Destination filter consists of two parts:

- Single destination name filter (SSJDWSDS). This part of the filter supports wildcards.
- Destination name list filter (SSJDDSTA and SSJDDDST#). This part of the filter does not support wildcards.

Device will pass the filter if its destination name matches any of these two parts. Both parts of the destination name filter are controlled by the same bit (SSJD9DST in SSJDFLT9).

Destination name list is specified by a pointer to a list (SSJDDSTA) and the number of elements in the list (SSJDDST#). Each element in the list is an 18-character destination name.

To disable the single name part of the filter, set the field (SSJDWSDS) to blank.

To disable the list part of the filter, set pointer (SSJDDSTA) or the number of elements (SSJDDST#) to binary zero.

Field Name
Description

SSJDWSDS
Single destination name for selection. This field supports wildcards.

SSJDDSTA
Pointer to destination name list.

SSJDDST#
Number of elements in the destination name list.

Output Register Information: When control returns to the SSI caller, the general purpose registers contain:

Register	Contents
0	Used as a work register by the system
1	Address of the SSOB control block
2 -- 13	Same as on entry to call
14	Return address
15	Return code

Return Code Information: The SSI places one of the following decimal return codes in register 15. Examine the return code to determine whether the request was processed.

Return Code (Decimal)
Meaning

SSRTOK (0)
The JES Device Information services request completed. Check the SSOBRETN field for function-specific return code.

SSRTNSUP (4)
The subsystem specified in the SSIBSSNM field does not support the JES Device Information services function call.

SSRTNTUP (8)
The subsystem specified in the SSIBSSNM field exists but is not active.

SSRTNOSS (12)
The subsystem specified in the SSIBSSNM field is not defined to MVS.

SSRTDIST (16)
The pointer to the SSOB control block or the SSIB control block is not valid, or the function code specified in the SSOBFUNC field is greater than the maximum number of functions supported by the subsystem specified in the SSIBSSNM field.

SSRTLERR (20)
Either the SSIB control block or the SSOB control block has incorrect lengths or formats.

SSRTNSSI (24)
The SSI has not been initialized.

Output Parameters: Output parameters for the function routine are:

- SSOBRETN
- SSJPRETN
- SSJD

SSOBRETN Contents: When control returns to the caller and register 15 contains a zero, the JES Device Information services function places one of the following decimal values in the SSOBRETN field:

Value (Decimal)
Meaning

SSJDOK (0)
Request successful.

SSJDERRW (4)
Request completed with possible errors. Some data might be returned. See reason code in SSJDRETN.

SSJDERRU (8)
Request cannot be completed because of a user error. See reason code in SSJDRETN.

SSJDERRJ (12)
Request cannot be completed because of an internal (JES) error. See reason code in SSJDRETN.

SSJDPARM (16)
Parameter list, SSOB extension, has an invalid format:

- Eyecatcher is invalid.
- The version number is not supported by JES.
- SSJD length is incorrect.

SSJDSTOR (20)
Request cannot be processed because the required storage cannot be obtained. No data can be returned to the caller.

SSJDRETN Contents: In addition to the return code in SSOBRETN, the field SSJDRETN contains a reason code that contains more specific information about the error. SSJDRETN can be set to one of the following values if SSOBRETN is not zero:

Value (Decimal)
Meaning

SSJDFTRE (4)
Invalid or contradictory filter is specified.

SSJDSPTE (8)
Invalid storage pointer in the parameter list.

SSJDSTRE (12)
No enough virtual storage to complete the request.

SSJDSUBF (16)
Invalid request type.

SSJDINTE (24)
Internal error building system information data area.

SSJDEYEE (28)
Incorrect eyecatcher for the parameter list SSJD.

SSJDUNSD (32)
Invalid or unsupported version of the parameter list SSJD.

SSJDSMLE EQU (36)
SSJD Control block is wrong size

SSJDSMAP EQU (128)
Error with storage addressed by storage management anchor pointer. For example, not key 1, fetch protected, incorrect eyecatcher.

SSJDSTGO (132)
STORAGE OBTAIN failed.

SSJDGLBL (136)
JES3 global system is down level. JES Device Information services (SSI 83) is not supported on the global system (JES3 only).

SSJDPOST (140)
No response data received from the JES3 global system (JES3 only).

SSJDINVL (144)
Invalid response received from the JES3 global system (JES3 only).

SSJDRWIL (152)
Wildcard specification error: SSJD1CHR = SSJDZOMO, and neither of them is hex zero.

Parameter list, SSJD contents: The following output fields in the parameter list are set on return from the JES Device Information services:

Field Name
Description

SSJDSVRM
Subsystem version: version of the JES Device Information services, implemented by the subsystem that respond to the request. This is a two-byte field that combines version and modifier. The caller might use this information to interpret the data returned by a subsystem.

SSJDLCL8
Pointer to the first and most recent data area in a chain of data areas for local devices, managed by JES subsystem. The interface adds data to this area whenever there is a local device that passes selection filters. This is a 64-bit pointer. **SSJDLCLP** is the 31-bit part of this pointer. The following data areas can be found in this chain:

Data area for printer/punch devices "Printer/punch data header (JDPHPRPU)" on page 381.

Data area for reader devices "Reader device data header (JDRHRDR)" on page 391.

SSJDRMT8
Pointer to the first and most recent data area in a chain of data areas for remote RJE workstations. The interface adds data to this area whenever there is a remote device that passes selection filters. Remote workstation data area (see description of "Remote Workstation data header (JDWHRMTW)" on page 376 structure) provides data on RJE workstation and also serves as an anchor point for the data areas that contain data for remote devices attached to that workstation. This is a 64-bit pointer. **SSJDRMTP** is the 31-bit part of this pointer.

SSJDNJE8
Pointer to chain of NJE connections (see "NJE connection data header (JDJHNJEC)" on page 422). **SSJDNJEP** is the 31-bit part of this pointer.

SSJDOFL8
Pointer to chain of OFFLOAD devices (see "OFFLOAD device data header (JDOHOFLD)" on page 395). **SSJDOFLP** is the 31-bit part of this pointer.

SSJDIFC8
Pointer to chain of interface devices (see "Logon device data header (JDGHLOGN)" on page 366 and "NETSRV device header (JDNHNSRV)" on page 368). **SSJDIFCP** is the 31-bit part of this pointer.

SSJDLIN8
Pointer to chain of line devices (see JDLHLINE). **SSJDLINP** is the 31-bit part of this pointer.

SSJDSIN8
Pointer to the first and most recent data area in a chain of system/member information data areas that provide information on JESPLEX members that pass system and member selection filters (see SSJD6SYS and SSJD6MBR in SSJDFLT6). The interface adds one such data area to the chain for each request for device data SSJDOBTD. See the description of "System information header (JDSIHDR)" on page 359 structure. This is a 64-bit pointer. **SSJDSINP** is the 31-bit part of this pointer.

SSJDLCL#
Number of the data areas returned in SSJDLCL8 chain. This number includes all data that are returned since the last release storage request (SSJDRSTG).

SSJDRMT#
Number of the data areas returned in SSJDRMT8 chain. This number includes all data that are returned since the last release storage request (SSJDRSTG).

SSJDRDV#
Number of the data areas returned for all remote RJE workstations in SSJDRMT8 chain. This number includes all data areas on all sub-device chains that are anchored to all JDWHRMTW data areas. This number also includes all data that are returned since the last release storage request (SSJDRSTG).

SSJDNJE#
Number of NJE connections returned (in SSJDNJE8/SSJDNJEP chain)

SSJDJDV#
Number of NJE subdevices returned (on all JDJHDEV8 chains)

SSJDOFL#
Number of OFFLOAD devices returned (in SSJDOFL8/SSJDOFLP chain)

SSJDODV#
Number of offload subdevices returned (on all JDOHDEV8 chains)

SSJDSRV#
Number of interface devices returned (in SSJDIFC8/SSJDIFCP chain)

SSJDLIN#
Number of line devices returned (in SSJDLIN8/SSJDLINP chain)

SSJDNDV#
Number of line subdevices returned (on all JDLHDEV8 chains)

SSJDSIN#
Number of the data areas returned in SSJDSIN8. This number includes all data that are returned since the last release storage request (SSJDRSTG).

SSJDSTRP
Storage management anchor internally used by the interface. The caller must set this field to zero before the first call to the interface. And after that this field is managed by the subsystem.

Data structures returned by the JES Device Information services:

System/member information: In addition to the device information, the JES Device Information services returns basic information on JESPLEX members that match the system and member selection filters (see SSJD6SYS and SSJD6MBR in SSJDFLT6). Note that complete information on JESPLEX members is available from the JESPLEX information subfunction of the JES Property Information services ("JESPLEX Information" on page 308).

The JES Device Information services return one system/information data area in the SSJDSIN8 chain for each request to obtain device data. This data area contains an entry for each system/member that meets the selection filters. Each data area consists of the following contiguous data structures:

- System information header mapped by JDSIHDR.
- Prefix section mapped by JPSYSPRF in macro IAZJPLXI.
- System information section mapped by JPSYSINF in macro IAZJPLXI.

System information header (JDSIHDR): This header provides a container for system/member information data:

Field Name
Description

JDSIEYE
Eyecatcher. Set to 'JDSIHDR' by the subsystem.

JDSIOHDR
Offset to the first section in this container. The prefix section mapped by JPSYSPRF in macro IAZJPLXI.

JDSINEX8
Pointer to the next JDSIHDR in this chain. The next header in the chain is returned by the next most recent call to the SSI. This is a 64-bit pointer. JDSINEXT is the 31-bit part of this pointer.

Prefix section (JPSYSPRF in macro IAZJPLXI) and system information section (JPSYSINF in macro IAZJPLXI) are not unique for this interface and are described in "Output Parameters" on page 257.

Device information: The interface returns a number of data areas that contain various data about devices managed by the JES. There are some common considerations that apply to all or most of these data areas.

Common fields: Device status value:

In the context of JES information services, device status is represented as a two-byte value. Full device status may be a combination of more than one basic status bit.

Bits in the two status bytes are defined as follows:

First status byte:

JDST1ACT
Active—device is currently busy with processing work.

JDST1INA
Inactive—device is ready for work but is not processing any work now (JES2).

Available—(JES3).

JDST1DRG
Draining—device is active but will stop after the current unit of work (JES2).

Ending—(JES3).

JDST1DRN
Drained—device is configured but is not available (JES2).

Offline—(JES3).

JDST1ACO
Device is active but varied offline (JES3).

Second status byte:

JDST2STE
Startable—device is not ready for work but has enough resource to start.

JDST2STG
Starting—device is being started.

JDST2HTD
Halted—device is halted by the HALT command. (JES2)

JDST2PAU
Paused—device is paused by the PAUSE command. (JES2)

JDST2HTG
Halting—device is being halted. (JES2)

JDST2INT
Intervention required—device needs operator attention.

JDST2NRS
Device is not responding.

JDST2END
Ended—JES2 processor (PCE) for this device has ended because of an error (JES2).

Device type value: The following device types are supported:

JDDTPRT
Printer (local or remote)

JDDTPUN
Punch (local or remote)

JDDTCONS
Console (remote)

JDDTLOGN
Logon device

JDDTNSRV
NETSRV device

JDDTLINE	Line
JDDTOFLD	OFFLOAD device
JDDTRDR	Reader (local or remote)
JDDTJRCV	Job receiver
JDDTSRCV	SYSOUT receiver
JDDTJXMT	Job transmitter
JDDTSXMT	SYSOUT transmitter

Attributes used in work selection criteria: Many JES devices support work selection based on the various attributes of the work selected for processing. The work selection list is a variable-size list of attributes that are used for work selection by this device. This list is represented in two ways in the output data, as a character string that is similar to how the appropriate JES command can display it, and as an encoded vector that is easier to process programmatically.

Each element of an encoded work selection list represents a code for a work selection attribute. The attributes in the list are ordered in the same way as they are used by the device. The actual values of the attributes are defined in the sections that report specific device attributes.

Here is a list of work selection attributes used in the encoded vector representation:

Attribute	Description
JDWSCLAS	Job class or output class
JDWSCRTN	Name of the owner or creator of the unit of work
JDWSFCBN	Forms Control Buffer (FCB) name
JDWSFLID	Print flash ID
JDWSFORM	Output form name
JDWSJBID	Range of JES job ids or job numbers
JDWSJBNM	Name of jobs to process
JDWSOPTY	Output priority

JDWSPRMD
Output processing mode

JDWSUCSN
Universal Character Set (UCS) name

JDWSBRST
Burst setting for output (JES2)

JDWSHLDI
Hold indicator (JES2)

JDWSJBLM
Job size limit - in records (JES2)

JDWSMBAF
JES2 MAS member affinity (JES2)

JDWSOUTD
OUTDISP setting (JES2)

JDWSRCJ2
Route code or destination name (JES2)

JDWSSCHE
Job scheduling environment (JES2)

JDWSSLSH
"Slash"—this code separates "must have" attributes from preferences (JES2)

JDWSSOSP
SYSOUT dataset size of limit (pages) (JES2)

JDWSSOSR
SYSOUT dataset size limit (records) (JES2)

JDWSSRVC
WLM service class of a job (JES2)

JDWSSVAF
Job spool volume affinity (JES2)

JDWSUSRD
User-defined criteria (JES2)

JDWSWRTN
Writer name (JES2)

JDWSCHRS
Coded font name (CHARS) setting (JES3)

JDWSCPID
Copy modification ID (JES3)

JDWSDEVT
Device type (JES3)

JDWSRCJ3
Route code or destination ID (JES3)

JDWSSTAK
Stacker setting (JES3)

Representation of variable size data: Some output data for devices have variable size and do not fit easily in a simple structure mapping. These data are physically located after the owning structure and are represented in a fixed part of a structure with a triple:

- Offset from the beginning of the structure to the first byte of variable-size data.
- Number of elements in the array.
- Length of each element of the array.

In this case, the length of the structure includes the length of the fixed part of the structure and the length of all variable-size elements belonging to that structure.

Data structures returned by the interface

After the successful call to the JES Device Information services, data areas with data for devices that pass the filters specified in the parameter list are added to chains anchored in the output fields of the parameter list.

The data area for each device is a contiguous area in storage that consists of the following elements:

- A header, which has an eyecatcher and contains all pointers used for chaining data areas together.
- A prefix section, which defines the type of data contained within this header and accounts for the length of all sections within the header. This length does not include the length of the header.
- One or more specific data sections, which contain the data that are unique for a particular device.

Each section has a section type and section type modifier. Together they uniquely identify the data section. Modifier 0 is reserved for a prefix section.

Common prefix section (JDCXPREF): This section describes the total length of data returned within a given header. Inspect the section type field to determine what kind of data are returned within this header.

In addition, the mapping for the common prefix section (JDCXPREF) can be used to access common fields at the top of all sections. The caller can navigate through the sections using these common fields and checking section types and modifiers without having to look inside data sections which are not relevant.

Field Name	Description
JDCXLNG	In a prefix section—the total length of all sections for this header (not including the length of the header). In all other sections—the length of that section.
JDCXTYPE	Section type
JDCXMOD	Section type modifier (0 for the prefix section)
JDCXDATA	Beginning of the section-unique data (the prefix sections do not have data)

Remote workstation console data header (JDCHCONS): This section describes the header structure for remote workstation console data. The total length of the data for a device is accounted for by the prefix section which follows this header structure. The prefix section will also identify the type of data returned in this header. For console devices the data (section) type is JDTYCONS. The following sections could be returned within this header:

- Prefix section (always first) “Common prefix section (JDCXPREF)” on page 363
- Console common section “Console device common section (JDCCCONS)”
- Console JES2 section “JES2 console device section (JDC2CONS)” on page 365
- Console JES3 section “JES3 console device section (JDC3CONS)” on page 365

Field Name
  Description

JDCHEYE
  Eye catcher

JDCHOHDR
  Offset to first (prefix) section

JDCHJPL8
  Address of IAZJPLXI for this device

  JDCHJPLX
    31-bit part of a pointer

JDCHNEX8
  Address of header of the next device (this remote)

  JDCHNEXT
    31-bit part of a pointer

JDCHPAR8
  Address of parent device (remote or line)

  JDCHPARN
    31-bit part of the pointer

Console device common section (JDCCCONS): This section describes the common attributes of console devices. Console devices are uniquely identified by the combination of device type (JDCCDEVT), device class (JDCCDEVC), device name (JDCCNAME) and name of the owning system (JDCCSYSN).

Field Name
  Description

JDCCLNG
  Length of this section

JDCCTYPE
  Section type

JDCCMOD
  Section type modifier

JDCCDEVT
  Device type

JDCCDEVC
  Device class

JDCCNAME
  Device name

JDCCSTAT
  Device status (see common device status flags):

JDCCSTA1	First status byte
JDCCSTA2	Second status byte

JDCCSYSN	Owning MVS system name
JDCCMBRN	JESPLEX member name
JDCCSECL	Security label
JDCCCSTA	Status, character value

JES2 console device section (JDC2CONS): This section describes attributes that are specific to JES2 console devices:

Field Name	Description
JDC2LNG	Length of this section
JDC2TYPE	Section type
JDC2MOD	Section type modifier
JDC2DVID	Binary device ID

JES3 console device section (JDC3CONS): This section describes attributes that are specific to JES3 console devices:

Field Name	Description
JDC3LNG	Length of this section
JDC3TYPE	Section type
JDC3MOD	Section type modifier
JDC3AUTH	Authority level (0-15)

The following variable size array of fixed-size character strings represent routing codes:

JDC3RTCO	Offset from the beginning of DSECT to the first Routing Code
JDC3RTC#	Number of elements in array
JDC3RTCL	Length of each element

The following variable size array of fixed-size character strings represent destination classes:

JDC3DSTO
Offset from the beginning of DSECT to the first Destination Class

JDC3DST#
Number of elements in array

JDC3DSTL
Length of each element

Logon device data header (JDGHLOGN): This section describes the header for logon device data. The total length of the data for a device is accounted for by the prefix section which follows this header structure. The prefix section will also identify the type of data returned in this header. For logon devices the data (section) type is JDTYLOGN. The following sections could be returned within this header:

- Prefix section (always first) "Common prefix section (JDCXPREF)" on page 363
- Logon device common section "Logon device common section (JDGCLOGN)"
- Logon device JES2 section "Logon device JES2 section (JDG2LOGN)" on page 368
- Logon device JES3 section "Logon device JES3 section (JDG3LOGN)" on page 368
- SNA application section (NJE) "SNA application section (JDAPPLIC)" on page 425(attributes of local application)
- SNA application JES2 section "SNA application JES2 section (JDA2APPL)" on page 426

Field Name
Description

JDGHEYE
Eye catcher

JDGHOHDR
Offset to first (prefix) section

JDGHJPL8
Address of IAZJPLXI for this device

JDGHJPLX
31-bit part of the pointer

JDGHNEX8
Address of header of the next device

JDGHNEXT
31-bit part of the pointer

JDGHPAR8
Address of parent device (remote, NJE connection or none)

JDGHPARN
31-bit part of a pointer

Logon device common section (JDGCLOGN): This section describes the logon device common attributes. Logon devices are uniquely identified by the combination of device type (JDGCDEVT), device class (JDGCDEVC), device name (JDGCNAME) and name of the owning system (JDGCSYSN).

Field Name
Description

JDGCLNG
Length of this section

JDGCTYPE
Section type

JDGCMOD
Section type modifier

JDGCDEVT
Device type

JDGCDEVC
Device class

JDGCNAME
Device name

JDGCAPPL
SNA application name

JDGCSTAT
Device status (see common device status flags):

JDGCSTA1
First status byte

JDGCSTA2
Second status byte

JDGCSYSN
Owning MVS system name

JDGCMBRN
JESPLEX member name

JDGCSECL
Security label

JDGCFLAG
Processing flags:

Bit Value
Description

JDGCFERR
Device error (not available)

JDGCFPWD
Device password set

JDGCFAUT
Auto restart

JDGCFTRC
Device trace requested

JDGCFLOG
Device activity is logged (JES2)

JDGCRINT
Auto restart interval (minutes)

JDGCRETR
Maximum number of restart retries (0 - indefinite retry)

JDGCCSTA
Status, character value

Logon device JES2 section (JDG2LOGN): Logon device JES2 section. Contains attributes specific for logons managed by JES2.

Field Name	Description
JDG2LNG	Length of this section
JDG2TYPE	Section type
JDG2MOD	Section type modifier
JDG2DVID	Binary device ID

Logon device JES3 section (JDG3LOGN): Logon device JES3 section. Contains attributes of logon device, which are specific to JES3.

Field Name	Description
JDG3LNG	Length of this section
JDG3TYPE	Section type
JDG3MOD	Section type modifier
JDG3DSPJ	JES3 DSP job ID
JDG3SNLM	Session limit

NETSRV device header (JDNHNSRV): Header for NETSRV device data. Total length of the data for a device is accounted for by the prefix section which follows this header structure. The prefix section will also identify the type of data returned in this header. For NETSRV devices the data (section) type is JDTYNSRV. The following sections could be returned within this header:

- Prefix section (always first) “Common prefix section (JDCXPREF)” on page 363
- NETSRV common section “NETSRV common section (JDNCNSRV)” on page 369
- NETSRV JES2 section “NETSRV device JES2 section (JDN2NSRV)” on page 370
- NETSRV JES3 section “NETSRV JES3 section (JDN3NSRV)” on page 370
- TCP socket data section “TCP socket section (JDSKSOCK)” on page 426(attributes of local socket)
- TCP socket JES2 section “TCP socket JES2 section (JDK2SOCK)” on page 427

Field Name
Description

JDNHEYE
Eye catcher

JDNHOHDR
Offset to first (prefix) section

JDNHJPL8
Address of IAZJPLXI for this device

- **JDNHJPLX**
  31-bit part of the pointer

JDNHNEX8
Address of header of the next device

- **JDNHNEXT**
  31-bit part of the pointer

JDNHPAR8
Address of parent device (NJE connection or 0)

- **JDNHPARN**
  31-bit part of the pointer

NETSRV common section (JDNCNSRV): NETSRV common section. Contains common attributes of NETSRV device. NETSRV devices are uniquely identified by the combination of device type (JDNCDEVT), device class (JDNCDEVC), device name (JDNCNAME) and name of the owning system (JDNCSYSN).

Field Name
Description

JDNCLNG
Length of this section

JDNCTYPE
Section type

JDNCMOD
Section type modifier

JDNCDEVT
Device type

JDNCDEVC
Device class

JDNCNAME
Device name

JDNCSKNM
Local socket name

JDNCSTAT
Device status (see common device status flags):

- **JDNCSTA1**
  First status byte
- **JDNCSTA2**
  Second status byte

JDNCSYSN
Owning MVS system name

JDNCMBRN
JESPLEX member name

JDNCSECL
Security label

JDNCFLG1
Processing flags:

Bit Value
Description

JDNC1AUT
Auto restart

JDNC1TRB
Basic trace requested

JDNC1TCM
Common code trace requested

JDNC1TEX
Extended trace requested

JDNCASID
NETSRV address space ID

JDNCSTAK
TCP/IP stack name

JDNCNSVJ
NETSRV job ID

JDNCRINT
Auto restart interval (minutes)

JDNCRETR
Maximum number of restart retries (0 - indefinite retry)

JDNCCSTA
Status, character value

NETSRV device JES2 section (JDN2NSRV): The NETSRV device JES2 section contains attributes of NETSRV device, which are specific to JES2.

Field Name
Description

JDN2LNG
Length of this section

JDN2TYPE
Section type

JDN2MOD
Section type modifier

JDN2DVID
Binary device ID

NETSRV JES3 section (JDN3NSRV): The NETSRV JES3 section contains attributes of NETSRV device, which are specific to JES3.

Field Name
Description

JDN3LNG
Length of this section

JDN3TYPE
Section type

JDN3MOD
Section type modifier

JDN3DSPJ
JES3 DSP job ID

Line device data header (JDLHLINE): The header for line device data returns data for the line devices with various communication protocols. The total length of the data for a device is accounted for by the prefix section which follows this header structure. The prefix section will also identify the type of data returned in this header. For line devices the data (section) type is JDTYLINE. The following sections could be returned within this header:

- Prefix section (always first) “Common prefix section (JDCXPREF)” on page 363
- Line common section “Line device common section (JDLCLINE)” on page 372
- Line JES2 section “Line device JES2 section (JDL2LINE)” on page 374
- Line JES3 section “Line device JES3 section (JDL3LINE)” on page 375
- SNA application section (NJE over SNA) “SNA application section (JDAPPLIC)” on page 425 (attributes of a peer application)
- SNA application JES2 section “SNA application JES2 section (JDA2APPL)” on page 426
- TCP socket section (NJE over TCP/IP) “TCP socket section (JDSKSOCK)” on page 426 (attributes of a peer socket) - when "line view" was requested (SSJDFLIN)
- TCP socket JES2 section “TCP socket JES2 section (JDK2SOCK)” on page 427

In the line view (see SSJDFLIN formatting option), data for remote (RJE) and NJE devices will be chained to this header using JDLHDEVC pointer. Number of devices in the chain is in JDLHDEV#. Data returned for each related device will have its own unique header structure. Depending on the type of the line, devices related to line device include:

- Job transmitters (NJE) (see “Job transmitter data header (JDXHJXMT)” on page 409)
- Job receivers (NJE) (see “Job receiver data header (JDBHJRCV)” on page 398)
- SYSOUT transmitters (NJE) (see “SYSOUT transmitter data header (JDYHSXMT)” on page 415)
- SYSOUT receivers (NJE) (see “SYSOUT receiver device data header (JDSHSRCV)” on page 403)
- Printer/punch devices (RJE) (see “Printer/punch data header (JDPHPRPU)” on page 381)
- Reader devices (RJE) (see “Reader device data header (JDRHRDR)” on page 391)
- Console devices (RJE) (see “Remote workstation console data header (JDCHCONS)” on page 363)

Field Name
Description

JDLHEYE
Eye catcher

JDLHOHDR
Offset to first (prefix) section

JDLHDEV#
Number of related devices in the chain (see JDLHDEV8)

JDLHJPL8
Address of IAZJPLXI for this device

- **JDLHJPLX**
  31-bit part of a pointer

JDLHNEX8
Address of header of the next device

- **JDLHNEXT**
  31-bit part of the pointer

JDLHPAR8
Address of parent device (remote, NJE connection or none)

- **JDLHPARN**
  31-bit part of the pointer

JDLHDEV8
Address of header of the first related device

- **JDLHDEVC**
  31-bit part of the pointer

Line device common section (JDLCLINE): The line device common section contains common attributes of line devices. Line devices are uniquely identified by the combination of device type (JDLCDEVT), device class (JDLCDEVC), device name (JDLCNAME) and name of the owning system (JDLCSYSN).

Field Name
Description

JDLCLNG
Length of this section

JDLCTYPE
Section type

JDLCMOD
Section type modifier

JDLCDEVT
Device type

JDLCDEVC
Device class

JDLCNAME
Device name

JDLCUNIT
Device unit name/number

JDLCSTAT
Device status (see common device status flags):

- **JDLCSTA1**
  First status byte

JDLCSTA2
Second status byte

JDLCSYSN
Owning MVS system name

JDLCMBRN
JESPLEX member name

JDLCSECL
Security label

JDLCPROT
Line protocol:

JDLCPBSC
BSC

JDLCPSNA
SNA

JDLCPTCP
TCP/IP

JDLCFLG1
Processing flags (1):

Bit Value	Description
JDLC1RJA	Line can be used for RJE
JDLC1NJA	Line can be used for NJE
JDLC1RJE	Line currently used for RJE
JDLC1NJE	Line currently used for NJE
JDLC1CMP	Line is capable of compression
JDLC1DPX	Full duplex (if not set - half duplex)
JDLC1PWD	Line password set
JDLC1AUT	Auto restart

JDLCFLG2
Processing flags (2):

Bit Value	Description
JDLC2AB	Use interface B for this BSC line (if not set - use interface A)
JDLC2TRP	Transparency indicator

JDLC2TRB
Basic trace requested

JDLC2TCM
Common code trace requested

JDLC2TEX
Extended trace requested

JDLC2CNA
Auto connect required (CONNECT=YES)

JDLC2CNN
Auto connect not required (CONNECT=NO) if both JDLC2CNA and JDLC2CNN are off, CONNECT=DEFAULT

JDLCDISC
Disconnect behavior:

JDLCDNO
No disconnect

JDLCDINT
Immediate disconnect (interrupt)

JDLCDQUI
Disconnect after current activity is complete (quiesce)

JDLCRINT
Auto restart interval (minutes)

JDLCRETR
Maximum number of restart retries (0 - indefinite retry)

JDLCCINT
Auto connect interval (minutes)

JDLCCSTA
Status, character value

Line device JES2 section (JDL2LINE): The line device JES2 section contains attributes of line devices that are specific to JES2.

Field Name
Description

JDL2LNG
Length of this section

JDL2TYPE
Section type

JDL2MOD
Section type modifier

JDL2CNAM
Connected remote workstation name or NJE node name

JDL2NJEN
Associated NJE node name

JDL2REST
Line resistance

Counts of the number of transmitters/receivers. X'FF' indicates a value of DEFAULT:

JDL2JT#
Number of job transmitters

JDL2JR#
Number of job receivers

JDL2ST#
Number of SYSOUT transmitters

JDL2SR#
Number of SYSOUT receivers

JDL2FLAG
Processing flags:

Bit Value	Description
JDL2FADS	Auto disconnect indicator
JDL2FSHR	Line is shared
JDL2FSPH	High speed line greater than 9600 bps (if not set - low speed line)
JDL2FAB	Use code B for this dual code BSC line (if not set - use code A)
JDL2FASC	Use ASCII control characters (if not set - use EBCDIC)
JDL2FLOG	Device activity is logged
JDL2FLEA	Line is leased

JDL2DVID
Binary device ID

Line device JES3 section (JDL3LINE): The line device JES3 section contains attributes of line devices that are specific to JES3.

Field Name	Description
JDL3LNG	Length of this section
JDL3TYPE	Section type
JDL3MOD	Section type modifier
JDL3BPS	Line speed (bps)

Remote Workstation data: If the data retrieval request to the JES Device Information services results in the data being returned for remote devices, devices attached to remote (RJE) workstations, the interface returns remote workstation data area for each RJE workstation. This data area is chained to the SSJDRMT8 output field in the parameter list.

Remote workstation data area contains the detailed information on the RJE workstation and also serves as an anchor for data areas that represent remote devices attached to that workstation.

Remote workstation data area consists of the following data structures:

- Header (“Remote Workstation data header (JDWHRMTW)”)
- Common prefix section (“Common prefix section (JDCXPREF)” on page 363): this section accounts for the total length of all other sections (header is not included). The prefix section also identifies the type of data returned in this header. For remote workstation, the data (section) type is JDTYRMTW.
- Remote workstation common section (“Remote workstation common section (JDWCRMTW)” on page 377)
- Optional remote workstation BSC section (“Remote workstation BSC section (JDWBSC)” on page 379)
- Optional remote workstation SNA section (“Remote workstation SNA section (JDWNSNA)” on page 378)
- Optional remote workstation JES2 section (“Remote workstation JES2 section (JDW2RMTW)” on page 380)

Data areas for devices attached to this remote workstation are chained to this header using JDWHDEV8 pointer in JDWHRMTW header. Data returned for each related device have their own unique header structures.

Depending on the type of the remote workstation, the following related devices can be returned for this workstation:

- Printer and punch devices (see “Printer/punch data header (JDPHPRPU)” on page 381)
- Reader devices (see “Reader device data header (JDRHRDR)” on page 391)
- Console devices (see “Remote workstation console data header (JDCHCONS)” on page 363)
- Line device (see “Line device data header (JDLHLINE)” on page 371)
- Logon device (see “Logon device data header (JDGHLOGN)” on page 366)

Remote Workstation data header (JDWHRMTW):

Field Name
    Description

JDWHEYE
    Eyecatcher. Set to 'JDWHRMTW' by the subsystem.

JDWHOHDR
    Offset to the first section in this container. That is the common prefix section mapped by “Common prefix section (JDCXPREF)” on page 363.

JDWHNEX8
    Address of the data header (JDWHRMTW) of the next remote workstation in the chain.

    This is a 64-bit pointer. JDWHNEXT is the 31-bit part of this pointer.

JDWHDEV8
    Address of the data area for the first device attached to this workstation.

    This is a 64-bit pointer. JDWHDEVC is the 31-bit part of this pointer.

JDWHDEV#
Number of data areas in the chain of the attached devices (JDWHDEV8).

JDWHJPL8
Address of the system information entry for the JESPLEX member that owns this workstation. This entry is contained in the system/member information data area pointed to by SSJDSIN8 output field in the parameter list and is mapped by “System Information” on page 457 in IAZJPLXI macro.

This is a 64-bit pointer. JDWHJPLX is the 31-bit part of this pointer.

Remote workstation common section (JDWCRMTW): This section contains the attributes that are common to all remote workstations. Remote workstation is uniquely identified by the combination of the workstation name (JDWCNAME), communication protocol type (JDWCPROT), and the name of the owning system (JDWCSYSN).

Field Name
Description

JDWCLNG
Length of this section

JDWCTYPE
Section type. Set to JDTYRMTW by the subsystem.

JDWCMOD
Section type modifier. Set to JDMDRWCM by the subsystem.

JDWCNAME
Remote workstation name

JDWCSYSN
Owning MVS system name

JDWCMBRN
Owning JESPLEX member name

JDWCDEVT
Remote workstation device type

JDWCSTAT
Remote workstation status (see common device status flags)

JDWCPROT
Connection protocol type

JDWCPBSC
Connected through BSC

JDWCPSNA
Connected through SNA

JDWCFLAG
Processing flags:

Bit Value
Description

JDWCFCMP
Compression is supported (SNA only)

JDWCFCNS
Workstation has the console

JDWCFMSG
Messages will be printed if the console is not available

JDWCFPWD
Password set indicator

JDWCLINE
Associated line device name

JDWCBUFS
Buffer size (in bytes)

JDWCDSCI
Disconnect interval (in seconds)

JDWCRTC
Route code

JDWCCRTC
Console route code

JDWCWTIM
Wait time (in seconds)

JDWCPRT#
Number of attached printers

JDWCPUN#
Number of attached punches

JDWCRDR#
Number of attached readers

JDWCCSTA
Remote workstation status, character value

Remote workstation SNA section (JDWNSNA): This section contains the remote workstation attributes that are specific for SNA communication protocol.

Field Name
Description

JDWNLNG
Length of this section

JDWNTYPE
Section type. Set to JDTYRMTW by the subsystem.

JDWNMOD
Section type modifier. Set to JDMDRWSN by the subsystem.

JDWNLUNM
SNA LU name

JDWNLOGN
Logon device name

JDWNFLAG
Processing flags:

Bit Value
Description

JDWNFLGN
Enable automatic logon

JDWNFCMP
Use compaction

JDWNFMSG
Send setup request through message

(If not set - send setup request through Peripheral Data Information Record (PDIR))

Remote workstation BSC section (JDWBSC): This section contains the remote workstation attributes that are specific for BSC communication protocol.

Field Name	Description
JDWBLNG	Length of this section
JDWBTYPE	Section type. Set to JDTYRMTW by the subsystem.
JDWBMOD	Section type modifier. Set to JDMDRWBS by the subsystem.
JDWBFLG1	Processing flags (1):

Bit Value	Description
JDWB1BEX	Buffer expansion feature
JDWB1BXA	Additional buffer expansion feature
JDWB1BLK	Blocked data record format
JDWB1HTB	Horizontal tabs feature
JDWB1MFJ	Add job name to messages
JDWB1MFT	Add time stamp to messages
JDWB1MRF	Multi-record feature
JDWB1MLV	Multi-leaving capability

JDWBFLG2
Processing flags (2):

Bit Value	Description
JDWB2VAR	Variable length record format (If not set - fixed length record format)
JDWB2TPY	Text transparency feature

JDWB2SHR
Shared line definition (multiple workstations can use the same line definition)

Remote workstation JES2 section (JDW2RMTW): This section contains the remote workstation attributes that are specific for JES2.

Field Name
Description

JDW2LNG
Length of this section

JDW2TYPE
Section type. Set to JDTYRMTW by the subsystem.

JDW2MOD
Section type modifier. Set to JDMDRWJ2 by the subsystem.

JDW2FLAG
Processing flags:

Bit Value
Description

JDW2F150
Send message HASP150 to this workstation and local operator

JDW2F190
The type of message HASP190 is ACTION

(if not set — the type of message HASP190 is INFO)

Printer/punch device data: If a data retrieval request to the JES Device Information services results in the data being returned for printer or punch devices, the interface returns one printer/punch data area for each printer or punch device.

For local printers and punches, this data area is chained to the SSJDLCL8 output field in the parameter list.

For remote printers and punches, this data area is chained to the JDWHDEV8 field in the data area ("Remote Workstation data header (JDWHRMTW)" on page 376) for the remote workstation that owns this printer or punch.

The printer/punch data area consists of the following data structures:
- Header ("Printer/punch data header (JDPHPRPU)" on page 381)
- Common prefix section ("Common prefix section (JDCXPREF)" on page 363): this section accounts for the total length of all other sections (header is not included). The prefix section also identifies the type of data returned in this header. For printer/punch devices, data (section) type is JDTYPRPU.
- Printer/punch common section ("Printer/punch common section (JDPCPRPU)" on page 381)
- Printer/punch work selection section ("Printer/punch work selection section (JDPWRKSL)" on page 384)
- Optional non-impact printer section ("Non-impact printer section (JDPFPRT)" on page 387)
- Optional printer/punch JES2 section ("Printer/punch JES2 section (JDP2PRPU)" on page 388)

- Optional printer/punch JES3 section ("Printer/punch JES3 section (JDP3PRPU)" on page 389)
- Optional remote printer section ("Remote printer section (JDPRPRT)" on page 391)
- Optional job information section ("Common sections" on page 425)
- Optional output information section ("Current output information section (JDUTINFO)" on page 429)
- Optional output information JES2 section ("Current output information JES2 section (JDU2INFO)" on page 430)
- Optional output information JES3 section ("Current output information JES3 section (JDU3INFO)" on page 431)

Printer/punch data header (JDPHPRPU): The header for printer/punch device data can return data for local and remote printers and local and remote punches. The total length of the data for a device is accounted for by the prefix section which follows this header structure. The prefix section will also identify the type of data returned in this header. For printer/punch devices the data (section) type is **JDTYPRPU**.

Field Name
Description

JDPHEYE
Eye-catcher. Set to JDPHPRPU by the subsystem.

JDPHOHDR
Offset to the first section in this container, the common prefix section mapped by "Common prefix section (JDCXPREF)" on page 363.

JDPHJPL8
Address of the system information entry for the JESPLEX member that owns this device. This entry is contained in the system/member information data area pointed to by SSJDSIN8 output field in the parameter list and is mapped by "System Information" on page 457 in IAZJPLXI macro.

This is a 64-bit pointer. JDPHJPLX is the 31-bit part of this pointer.

JDPHNEX8
Address of the data area of the next device in the chain.

This is a 64-bit pointer. JDPHNEXT is the 31-bit part of this pointer.

JDPHPAR8
Address of the data area of the parent device (remote, line or none).

This is a 64-bit pointer. JDPHPARN is the 31-bit part of this pointer.

Printer/punch common section (JDPCPRPU): This section contains the attributes that are common to all printer or punch devices. The device is uniquely identified by the combination of device type (JDPCDEVT), device class (JDPCDEVC), device name (JDPCNAME), and the name of the owning system (JDPCSYSN).

Field Name
Description

JDPCLNG
Length of this section

JDPCTYPE
Section type

JDPCMOD
Section type modifier

JDPCDEVT
Device type: JDDTPRT for printer devices JDDTPUN for punch devices

JDPCDEVC
Device class: JDDCLCL for local devices JDDCRMT for remote devices

JDPCNAME
Device name

JDPCUNIT
Device unit name/number

JDPCSTAT
Device status (see common device status flags):

- **JDPCSTA1**
  First status byte
- **JDPCSTA2**
  Second status byte

JDPCSYSN
Owning MVS system name

JDPCMBRN
JESPLEX member name

JDPCSECL
Security label

JDPCMOD1
Processing flags (1):

Bit Value	Description
JDPC1FSS	FSS mode printer (if not set - JES mode printer)
JDPC1EDG	Mark edge of separator page (3800 printer)
JDPC1HTR	Honor TRC parameter on OUTPUT JCL statement (JES mode printer)
JDPC1PAU	Pause between data sets (JES mode printer)
JDPC1DSS	Print separator page between data sets
JDPC1GPS	Print JESNEWS dataset between output groups
JDPC1TRC	Trace requested
JDPC1TRK	Read one track cell at a time from spool (if not set - read one record at a time)

JDPCMOD2
Processing flags (2):

Bit Value
Description

JDPC2VUC
Verify UCS

JDPC2SCH
Use current character arrangement table for separator pages (3800) (if not set - use default table)

JDPC2NIP
Non-impact printer

JDPC2FLU
For punches, add a blank card after each data set

JDPC2SP2
SPACE=DOUBLE override for this data set

JDPC2SP1
SPACE=SINGLE override for this data set

JDPC2SP3
SPACE=TRIPLE override for this data set

JDPCCKML
Maximum number of lines in a logical page (used for checkpoint)

JDPCCKPG
Number of pages between checkpoints

JDPCDFCB
Default FCB name

JDPCNEWP
Processing of skip-to-channel commands:

JDPCNPDF
Use PRINTDEF statement (DEFAULT)

JDPCNP1
Skip to channel 1 is treated as new page (ONE)

JDPCNPAL
Skip to any channel is treated as new page (ALL)

JDPCTRNS
TRANS= parameter processing:

JDPCTYES
Always perform translation

JDPCTNO
Never perform translation

JDPCTDEF
Use TRANS= parameter from PRINTDEF statement

JDPCFLID
Default flash ID

JDPCMODF
N/I-printer modify identifier

JDPCMOD3
Processing flags (3)

Bit Value	**Description**
JDPC3CKP	Checkpoints are based on page count (see JDPCCKPG)
JDPC3CKR	Checkpoints are based on record count (JES3) (see JDP3CKRC)
JDPC3CKS	Checkpoints are based on elapsed time (see JDPFCSEC)
JDPC3SUP	Halt with SETUP message between units of work

JDPCCSTA
Status, character value

The array of CHARS settings is a variable size array of fixed-size character strings that represent CHARS settings associated with the printer:

Field Name	**Description**
JDPCCHRO	Offset from the beginning of the section to the first CHARS value
JDPCCHR#	Number of elements in array
JDPCCHRL	Length of each element

Printer/punch work selection section (JDPWRKSL): This section contains the attributes that are pertaining to work selection and work selection criteria used by this device.

Field Name	**Description**
JDPWLNG	Length of this section
JDPWTYPE	Section type. Set to JDTYPRPU by the subsystem
JDPWMOD	Section type modifier. Set to JDMDPPWS by the subsystem

Values for attributes used for work selection:

Field Name	**Description**
JDPWOWNN	Name of the owner/creator of a SYSOUT dataset
JDPWFCBN	Forms Control Buffer (FCB) name
JDPWFLSH	Flash ID.

Array of UCS names. This is variable size array of fixed-size character strings which represent form names.

Field Name
 Description

JDPWUCSO
 Offset from the beginning of the section to the first UCS name

JDPWUCS#
 Number of elements in array

JDPWUCSL
 Length of each element

JDPWFLG1
 Work selection attributes represented by bits:

 Bit Value
  Description

 JDPW1BRS
  Select output with BURST=YES

  (If not set - select output with BURST=NO)

JDPWRCLL
 Low limit of dataset size in records

JDPWRCLH
 High limit of dataset size in records

JDPWPGLL
 Low limit of dataset size in pages

JDPWPGLH
 High limit of dataset size in pages

The array of output class names is a variable size array of fixed-size character strings which represent names of output classes. The class array can also be viewed as a single string, which starts JDPWCLSO bytes from JDPWRKSL and has a length of JDPWCLS#.

Field Name
 Description

JDPWCLSO
 Offset from the beginning of the section to the first class name

JDPWCLS#
 Number of elements in array

JDPWCLSL
 Length of each element

Array of form names: This is variable size array of fixed-size character strings that represent form names used for work selection.

Field Name
 Description

JDPWFRMO
 Offset from the beginning of the section to the first form name

JDPWFRM#
Number of elements in array

JDPWFRML
Length of each element

Array of processing mode names: This is variable size array of fixed-size character strings that represent the names of processing modes used for work selection.

Field Name
Description

JDPWPRCO
Offset from the beginning of the section to the first processing mode name

JDPWPRC#
Number of elements in array

JDPWPRCL
Length of each element

Array of routing codes/destination IDs. This is a variable size array of fixed-size character strings that represent routing codes/destination IDs used for work selection.

Field Name
Description

JDPWDSTO
Offset from the beginning of the section to the first route code/destination ID

JDPWDST#
Number of elements in array

JDPWDSTL
Length of each element

Work selection criteria in printable form: The work selection criteria string for this device is represented in the format that is used by appropriate JES configuration command.

Field Name
Description

JDPWPWSO
Offset from the beginning of the section to the work selection string

JDPWPWSL
Length of the work selection string

Work selection criteria in encoded form: The work selection criteria for this device is encoded as an array (vector) of bytes, where the value of each byte represents some attribute used for work selection. The attributes are listed in the order of their processing for selection.

Field Name
Description

JDPWEWSO
Offset from the beginning of the section to the encoded work selection array

JDPWEWSL
Length of the work selection array

Non-impact printer section (JDPFPRT): This section contains the attributes that are specific for non-impact (N/I) printers.

Field Name
Description

JDPFLNG
Length of this section

JDPFTYPE
Section type. Set to JDTYPRPU by the subsystem.

JDPFMOD
Section type modifier. Set to JDMDPPFS by the subsystem.

JDPFSSNM
Functional subsystem name

JDPFPROC
FSS procedure name

JDPFDEVN
FSS device (FSA) name

JDPFNPRO
Non-process runout (NPRO) time in seconds (if 0 - NPRO is not used)

JDPFFLAG
Processing flags:

Bit Value
Description

JDPFFTRC
Rolling trace requested

JDPFFPRS
JES preselects datasets for device

JDPFCPMK
Copy mark increment:

Possible values:

JDPFCDFT
Use PRINTDEF settings (DEFAULT)

JDPFCCON
Do not increment (COPYMARK=CONSTANT)

JDPFCDS
Increment on a dataset level (COPYMARK=DATASET)

JDPFCJOB
Increment on a job level (COPYMARK=JOB)

JDPFCNON
No copy marks to be used (COPYMARK=NONE)

JDPFCSEC
Checkpoint seconds (when JDPC3CKP flag is not set)

JDPFSSYS
Name of MVS system where FSA is active

Printer/punch JES2 section (JDP2PRPU): This section contains the attributes that are specific for printers and punches managed by JES2.

Field Name
Description

JDP2LNG
Length of this section

JDP2TYPE
Section type. Set to JDTYPRPU by the subsystem.

JDP2MOD
Section type modifier. Set to JDMDPPJ2 by the subsystem.

JDP2FLAG

Processing flags:

Bit Value
Description

JDP2FSEP
Print separator pages between data set groups

JDP2DVID
Binary device ID assigned by JES2

Attributes used by JES2 for work selection for this device, in addition to work selection attributes and work selection criteria found in the “Printer/punch work selection section (JDPWRKSL)” on page 384.

Field Name
Description

JDP2WFLG
Work selection flags:

Bit Value
Description

JDP2SFJR
Apply job number range selection to jobs

JDP2SFST
Apply job number range selection to started tasks (STC)

JDP2SFTS
Apply job number range selection to time-sharing users (TSU)

JDP2WJBN
Job name for work selection

JDP2WJIL
Low limit of job/STC/TSU numbers for work selection

JDP2WJIH
High limit of job/STC/TSU numbers for work selection

JDP2WRTN
Writer name for work selection

Array of spool volume names for work selection (spool volume affinity). This is a variable size array of fixed-size character strings that represent spool volume names used for work selection.

Field Name
Description

JDP2WVLO
Offset from the beginning of the section to the first volume name

JDP2WVL#
Number of elements in array

JDP2WVLL
Length of each element

Array of binary route codes for work selection: This is a variable size array of fixed-size elements that represent binary route codes used for work selection. Each element of this array is mapped by the "Binary route code structure (JDD2DEST)" on page 431 structure.

Field Name
Description

JDP2WRCO
Offset from the beginning of the section to the first route code

JDP2WRC#
Number of elements in array

JDP2WRCL
Length of each element

Printer/punch JES3 section (JDP3PRPU): This section contains the attributes that are specific for printers and punches managed by JES3.

Field Name
Description

JDP3LNG
Length of this section

JDP3TYPE
Section type. Set to JDTYPRPU by the subsystem.

JDP3MOD
Section type modifier. Set to JDMDPPJ3 by the subsystem.

JDP3GRPN
Device group name

JDP3DEVT
Device type name

JDP3DSPJ
DSP job ID

JDP3HFLG
H/R Flags:

Bit Value
Description

JDP3HFCB
Hold FCB option on device

JDP3HCHR
Hold CHARS option on device

JDP3HUCS
Hold UCS option on device

JDP3HMOD
Hold CPYMOD option on device

JDP3HFLS
Hold FLASH option on device

JDP3HFRM
Hold FORMS option on device

JDP3HBUR
Hold STACKER (BURST) option

JDP3FLG1
Processing flags:

Bit Value	Description
JDP31DYN	Device can be started dynamically
JDP31OLG	Log operator commands in output
JDP31BPG	Print burst pages at the end of job
JDP31DGY	Device cannot process local data sets
JDP31PDC	PDEFAULT=CHARS
JDP31PDF	PDEFAULT=FCB

JDP3CKRC
Number of records between checkpoints

JDP3TRC
TRC

JDP3CGS
Amount of character generation storage in type 3800 printer:

Possible values:

JDP3CGS1
128 characters

JDP3CGS2
256 characters

JDP3CB
Clear print indicator:

Possible values:

JDP3CBD
Clear after each data set

JDP3CBJ
Clear after each job

JDP3CBN
Clear as required by printer

Remote printer section (JDPRPRT): This section contains the attributes that are specific for remote printers.

Field Name	Description
JDPRLNG	Length of this section
JDPRTYPE	Section type. Set to JDTYPRPU by the subsystem.
JDPRMOD	Section type modifier. Set to JDMDPPRM by the subsystem.
JDPRCMPT	Compaction table name/number
JDPRRECS	Transmission record size
JDPRWDTH	Print width
JDPRDEVT	Remote device type and subaddress (PRINTnn, EXCHnn or BASICnn)
JDPRFLAG	Processing flags:

Bit Value	Description
JDPRFASI	Send print data “as is”
JDPRFCMT	Printer has compaction capability
JDPRFCMP	Printer has compression capability
JDPRFFCB	JES will load FCB on this device
JDPRFSSP	Printer has suspend/interrupt capability
JDPRFCTL	send carriage control

Reader device data header (JDRHRDR): Header for reader device data. Data for the following devices may be returned within this header: local and remote and internal readers. Total length of the data for a device is accounted for by the prefix section which follows this header structure. The prefix section will also identify the type of data returned in this header. For reader devices the data (section) type is JDTYRDR. The following sections could be returned within this header:

- Prefix section (always first) “Common prefix section (JDCXPREF)” on page 363
- Reader common section “Reader common section (JDRCRDR)” on page 392

- Reader JES2 section “Reader JES2 section (JDR2RDR)” on page 393
- Reader JES3 section “Reader JES3 section (JDR3RDR)” on page 394
- Job information section “Common sections” on page 425

Field Name
  Description

JDRHEYE
  Eye catcher

JDRHOHDR
  Offset to first (prefix) section

JDRHJPL8
  Address of IAZJPLXI for this device

  JDRHJPLX
    31-bit part of a pointer

JDRHNEX8
  Address of header of the next device

  JDRHNEXT
    31-bit part of the pointer

JDRHPAR8
  Address of parent device (remote, line or none)

  JDRHPARN
    31-bit part of the pointer

Reader common section (JDRCRDR): Reader common section. Contains common attributes of reader device. Reader devices are uniquely identified by the combination of device type (JDRCDEVT), device class (JDRCDEVC), device name (JDRCNAME) and name of the owning system (JDRCSYSN).

Field Name
  Description

JDRCLNG
  Length of this section

JDRCTYPE
  Section type

JDRCMOD
  Section type modifier

JDRCDEVT
  Device type

JDRCDEVC
  Device class: JDDCLCL for local devices JDDCRMT for remote devices

JDRCNAME
  Device name

JDRCUNIT
  Device unit name/number

JDRCSTAT
  Device status (see common device status flags):

  JDRCSTA1
    First status byte

JDRCSTA2
Second status byte

JDRCSYSN
Owning MVS system name

JDRCMBRN
JESPLEX member name

JDRCSECL
Security label

Progress counters

JDRCTJB#
Total jobs processed by this reader

JDRCTRC#
Total number of records (card images) processed

JDRCPRC#
Number of records (card images) processed for the current job

JDRCDFJC
Default job class

JDRCDFMC
Default message class

JDRCCSTA
Status, character value

Reader JES2 section (JDR2RDR): Reader JES2 section. Contains attributes specific for readers managed by JES2.

Field Name
Description

JDR2LNG
Length of this section

JDR2TYPE
Section type

JDR2MOD
Section type modifier

JDR2PRDS
Default print destination

JDR2PUDS
Default punch destination

JDR2NODE
Default execution node in NJE network

JDR2PTLM
Priority limit

JDR2PTIN
Priority increment

JDR2FLAG
Processing flags:

Bit Value	Description
JDR2FHLD	Hold jobs when processed
JDR2FDVA	Authorized for device commands
JDR2FJBA	Authorized for job commands
JDR2FSYA	Authorized for system commands
JDR2FTRC	Trace requested
JDR2FANY	Default member affinity ANY
JDR2FIND	Default member affinity IND

JDR2DVID
Binary device ID

Array of MAS member names (default member affinity) This is variable size array of fixed-size character strings which represent names of MAS members which can be used for job execution.

JDR2MBRO
Offset from the beginning of DSECT to the first member name

JDR2MBR#
Number of elements in array

JDR2MBRL
Length of each element

Reader JES3 section (JDR3RDR): Reader JES3 section. Contains attributes specific for readers managed by JES3.

Field Name	Description
JDR3LNG	Length of this section
JDR3TYPE	Section type
JDR3MOD	Section type modifier
JDR3GRPN	Device group name
JDR3DEVT	Device type name
JDR3DSPJ	DSP job ID
JDR3FLAG	Processing flags:

Bit Value	Description
JDR3FACT	Account number required on JOB card
JDR3FPGM	Programmer name required on JOB card
JDR3FABV	SWA should be located above the line
JDR3FBLP	BLP label setting is respected (if not set - BLP setting is ignored)

JDR3DPTY
Default job priority

JDR3JLVL
Default job message level

JDR3ALVL
Default allocation message level

JDR3TIML
Default time limit for a job step in seconds (144000 - no limit)

JDR3REGL
Default region size in KBytes

OFFLOAD device data header (JDOHOFLD): Header for OFFLOAD device data. Total length of the data for a device is accounted for by the prefix section which follows this header structure. The prefix section will also identify the type of data returned in this header. For OFFLOAD devices the data (section) type is JDTYOFLD. The following sections could be returned within this header:

- Prefix section (always first) "Common prefix section (JDCXPREF)" on page 363
- OFFLOAD device common section "OFFLOAD device common section (JDOCOFLD)" on page 396
- OFFLOAD device JES2 section "OFFLOAD device JES2 section (JDO2OFLD)" on page 397

Data for devices related to that OFFLOAD device is chained to this header using JDOHDEVC pointer. Number of devices in the chain is in JDOHDEV#. Data returned for each related device will have its own unique header structure. Devices related to OFFLOAD device include:

- Job transmitters (see "Job transmitter data header (JDXHJXMT)" on page 409)
- Job receivers (see "Job receiver data header (JDBHJRCV)" on page 398)
- SYSOUT transmitters (see "SYSOUT transmitter data header (JDYHSXMT)" on page 415)
- SYSOUT receivers (see "SYSOUT receiver device data header (JDSHSRCV)" on page 403)

Field Name	Description
JDOHEYE	Eye catcher
JDOHOHDR	Offset to first (prefix) section

JDOHDEV#
Number of related devices in the chain (see JDOHDEV8)

JDOHJPL8
Address of IAZJPLXI for this device

JDOHJPLX
31-bit part of a pointer

JDOHNEX8
Address of header of the next device

JDOHNEXT
31-bit part of the pointer

JDOHDEV8
Address of header of the first related device

JDOHDEVC
31-bit part of the pointer

OFFLOAD device common section (JDOCOFLD): OFFLOAD device common section. Contains common attributes of OFFLOAD device. OFFLOAD devices are uniquely identified by the combination of device type (JDOCDEVT), device class (JDOCDEVC), device name (JDOCNAME) and name of the owning system (JDOCSYSN).

Field Name
Description

JDOCLNG
Length of this section

JDOCTYPE
Section type

JDOCMOD
Section type modifier

JDOCDEVT
Device type

JDOCDEVC
Device class

JDOCNAME
Device name

JDOCUNIT
Device unit name/number or type

JDOCSTAT
Device status (see common device status flags):

JDOCSTA1
First status byte

JDOCSTA2
Second status byte

JDOCSYSN
Owning MVS system name

JDOCMBRN
JESPLEX member name

JDOCSECL
Security label

JDOCCSTA
Status, character value

OFFLOAD device JES2 section (JDO2OFLD): OFFLOAD device JES2 section. Contains attributes of OFFLOAD device, which are specific to JES2.

Field Name	Description
JDO2LNG	Length of this section
JDO2TYPE	Section type
JDO2MOD	Section type modifier
JDO2NRUN	Number of units to use
JDO2NRVL	Number of volumes to use
JDO2RETD	Retention period (days)
JDO2DSN	Dataset name
JDO2FLG1	Processing flags:

Bit Value	Description
JDO21XMT	Started as transmitter
JDO21RCV	Started as receiver

JDO2FLG2
More processing flags:

Bit Value	Description
JDO22ARC	ARCHIVE=ALL (if not set - ARCHIVE=ONE)
JDO22CRT	Preserve creation time (if not set assign new creation time after restore)
JDO22SAF	Protect via SAF
JDO22TRC	Trace requested
JDO22VAL	Validate logical record length

JDO2TLAB
Tape label processing type:

JDO2TNL
label=NL

JDO2TSL
label=SL

JDO2TNSL
label=NSL

JDO2TSUL
label=SUL

JDO2TBLP
label=BLP

JDO2TAL
label=AL

JDO2TAUL
label=AUL

JDO2DVID
Binary device ID

Job receiver data header (JDBHJRCV): Header for job receiver data. Data for the following devices may be returned within this header:

- NJE job receivers
- OFFLOAD job receivers

The total length of the data for a device is accounted for by the prefix section which follows this header structure. The prefix section will also identify the type of data returned in this header. For job receiver devices the data (section) type is JDTYJBRC.

The following sections could be returned within this header:

- Prefix section (always first) “Common prefix section (JDCXPREF)” on page 363
- Job receiver common section “Job receiver common section (JDBCJRCV)” on page 399
- Job receiver JES2 section “Job receiver device JES2 section (JDB2JRCV)” on page 403
- Job receiver OFFLOAD section “Job receiver OFFLOAD section (JDBOJRCV)” on page 400
- Job information section “Common sections” on page 425

Field Name
Description

JDBHEYE
Eye catcher

JDBHOHDR
Offset to first (prefix) section

JDBHJPL8
Address of IAZJPLXI for this device

JDBHJPLX
31-bit part of a pointer

JDBHNEX8
Address of header of the next device

JDBHNEXT
31-bit part of the pointer

JDBHPAR8
Address of parent device (offload, line or NJE connection)

JDBHPARN
31-bit part of the pointer

Job receiver common section (JDBCJRCV): Contains common attributes of job receiver device. Job receiver devices are uniquely identified by the combination of device type (JDBCDEVT), device class (JDBCDEVC), device name (JDBCNAME) and name of the owning system (JDBCSYSN).

Field Name	Description
JDBCLNG	Length of this section
JDBCTYPE	Section type
JDBCMOD	Section type modifier
JDBCDEVT	Device type
JDBCDEVC	Device class: JDDCNJE for NJE devices JDDCOFLD for OFFLOAD devices
JDBCNAME	Device name
JDBCSTAT	Device status (see common device status flags):
JDBCSTA1	First status byte
JDBCSTA2	Second status byte
JDBCSYSN	Owning MVS system name
JDBCMBRN	JESPLEX member name
JDBCSECL	Security label
JDBCFLG1	Processing flags:

Bit Value	Description
JDBC1HLD	hold received jobs (HOLD=YES)

JDBC1RLS
release received jobs (HOLD=NO) if neither bit set, status is not changed (HOLD=NONE)

JDBCCSTA
Status, character value

Job receiver OFFLOAD section (JDBOJRCV): Job receiver OFFLOAD section. Contains attributes specific for JES2 OFFLOAD job receivers.

JDBOLNG
Length of this section

JDBOTYPE
Section type

JDBOMOD
Section type modifier

JDBOFLG1
Processing flags:

Bit Value	Description
JDBO1NFY	send notification message to TSO userid as requested
JDBO1STR	start this receiver when OFFLOAD device is started
JDBOEANY	Job execution member affinity is ANY

Modification settings - job attributes will be changed in a specified way when job is successfully received.

Field Name	Description
JDBOMJBC	New job class
JDBOMROU	New route code/destination

Array of member MAS names (new member affinity). This is variable size array of fixed-size character strings which represent names of MAS members which can be used for job execution.

Note: Check the JDBOEANY bit first before using these fields.

Field Name	Description
JDBOMMBO	Offset from the beginning of DSECT to the first member name
JDBOMMB#	Number of elements in array
JDBOMMBL	Length of each element

Values for attributes used for work selection:

Field Name
: **Description**

JDBOWOWN
: Name of job owner

JDBOWJBN
: Job name

JDBOWSVN
: Service class name

JDBOWSCH
: Scheduling environment

JDBOWFLG
: Work selection flags:

  Bit Value
  : **Description**

  JDBOWHLD
  : Select held (HOLD=YES)

  JDBOWRLS
  : Select non held (HOLD=NO) If neither bit set, select none (HOLD=NONE)

  JDBOWANY
  : Work selection member affinity is ANY (also see section starting with field JDBOWMBO)

  JDBOWJOB
  : Job ID range is for JOB

  JDBOWSTC
  : Job ID range is for STC

  JDBOWTSU
  : Job ID range is for TSU

Job ID range for work selection:

JDBOWJIL
: Job ID low limit

JDBOWJIH
: Job ID high limit

Array of job classes. This is a variable size array of fixed-size character strings which represent names of job classes. The class array can also be viewed as a single string, which starts JDBOWCLO bytes from JDBOJRCV and which length is JDBOWCL#:

Field Name
: **Description**

JDBOWCLO
: | Offset from the beginning of DSECT to the first job class or job class group

JDBOWCL#
: Number of elements in array

JDBOWCLL
Length of each element

Array of routing codes/destination IDs. This is variable size array of fixed-size character strings which represent routing codes or destination IDs.

Field Name	Description
JDBOWDSO	Offset from the beginning of DSECT to the first route code/dest ID
JDBOWDS#	Number of elements in array
JDBOWDSL	Length of each element

Array of binary route codes for work selection This is variable size array of fixed-size structures, mapped by the JDD2DEST structure, of binary route codes used for work selection.

Field Name	Description
JDBOWRCO	Offset from the beginning of DSECT to the first route code
JDBOWRC#	Number of elements in array
JDBOWRCL	Length of each element

Array of MAS member names for work selection (member affinity) This is variable size array of fixed-size character strings which represent MAS member names used for work selection. NOTE: Check the JDBOWANY bit first before using these fields.

Field Name	Description
JDBOWMBO	Offset from the beginning of DSECT to the first member name
JDBOWMB#	Number of elements in array
JDBOWMBL	Length of each element

Work selection criteria in printable form. The work selection criteria string is represented in the format which would be used by appropriate JES configuration command.

Field Name	Description
JDBOWSCO	Offset from the beginning of DSECT to the work selection string
JDBOWSCL	Length of the work selection string

Work selection criteria in encoded form. The work selection criteria is encoded as an array of bytes, where the value of each byte represents an attribute used for work selection. (See symbol definitions for work selection attributes - JDWSxxxx.)

Field Name	Description
JDBOWSEO	Offset from the beginning of DSECT to the work selection array
JDBOWSEL	Length of the work selection array

Job receiver device JES2 section (JDB2JRCV): The job receiver device JES2 section contains the job receiver attributes:

Field Name	Description
JDB2LNG	Length of this section
DB2TYPE	Section type
JDB2MOD	Section type modifier
JDB2DVID	Binary device ID

SYSOUT receiver device data header (JDSHSRCV): Header for SYSOUT receiver data. Data for the following devices may be returned within this header: - NJE SYSOUT receivers - OFFLOAD SYSOUT receivers Total length of the data for a device is accounted for by the prefix section which follows this header structure. The prefix section will also identify the type of data returned in this header. For SYSOUT receiver devices the data (section) type is JDTYSYRC. The following sections could be returned within this header:

- Prefix section (always first) “Common prefix section (JDCXPREF)” on page 363
- SYSOUT receiver common section “SYSOUT receiver common section (JDSCSRCV)” on page 404
- SYSOUT receiver JES2 section “SYSOUT receiver JES2 section (JDS2SRCV)” on page 409
- SYSOUT receiver OFFLOAD section “SYSOUT receiver OFFLOAD section (JDSOSRCV)” on page 405
- Job information section “Common sections” on page 425
- Output information section “Current output information section (JDUTINFO)” on page 429
- Output information JES2 section “Current output information JES2 section (JDU2INFO)” on page 430

Field Name	Description
JDSHEYE	Eye catcher
JDSHOHDR	Offset to first (prefix) section

JDSHJPL8
Address of IAZJPLXI for this device

JDSHJPLX
31-bit part of a pointer

JDSHNEX8
Address of header of the next device

JDSHNEXT
31-bit part of the pointer

JDSHPAR8
Address of parent device (offload, line or NJE connection)

JDSHPARN
31-bit part of the pointer

SYSOUT receiver common section (JDSCSRCV): The SYSOUT receiver common section contains common attributes of SYSOUT receiver devices. SYSOUT receiver devices are uniquely identified by the combination of device type (JDSCDEVT), device class (JDSCDEVC), device name (JDSCNAME) and name of the owning system (JDSCSYSN).

Field Name
Description

JDSCLNG
Length of this section

JDSCTYPE
Section type

JDSCMOD
Section type modifier

JDSCDEVT
Device type

JDSCDEVC
Device class: JDDCNJE for NJE devices JDDCOFLD for OFFLOAD devices

JDSCNAME
Device name

JDSCSTAT
Device status (see common device status flags):

JDSCSTA1
First status byte

JDSCSTA2
Second status byte

JDSCSYSN
Owning MVS system name

JDSCMBRN
JESPLEX member name

JDSCSECL
Security label

JDSCCSTA
Status, character value

SYSOUT receiver OFFLOAD section (JDSOSRCV): SYSOUT receiver OFFLOAD section. Contains attributes specific for JES2 OFFLOAD SYSOUT receivers.

Field Name	Description
JDSOLNG	Length of this section
JDSOTYPE	Section type
JDSOMOD	Section type modifier
JDSOFLG1	Processing flags:

Bit Value	Description
JDSO1NFY	send notification message to TSO userid as requested
JDSO1STR	start this receiver when OFFLOAD device is started

Modification settings - SYSOUT dataset attributes will be changed in a specified way when data set is successfully received.

Field Name	Description
JDSOMFCB	New FCB name
JDSOMFLH	New flash ID
JDSOMFRM	New form name
JDSOMPRM	New processing mode
JDSOMCLS	New output class/queue
JDSOMDST	New route code/destination
JDSOMUCS	New UCS name
JDSOMWTR	New writer name
JDSOFLG2	Modification settings:

Bit Value	Description
JDSO2BRS	Set BURST=YES

JDSO2BRN
Set BURST=NO if neither bit set, do not change the attribute

JDSO2HLD
Hold output (HOLD=YES)

JDSO2RLS
Release output (HOLD=NO) if neither bit set, status is not changed (HOLD=NONE)

JDSO2ODH
Set OUTDISP=HOLD

JDSO2ODK
Set OUTDISP=KEEP

JDSO2ODL
Set OUTDISP=LEAVE

JDSO2ODW
Set OUTDISP=WRITE

Values for attributes used for work selection:

Field Name	Description
JDSOWFCB	FCB name
JDSOWFLH	Flash ID
JDSOWCRT	SYSOUT creator/owner name
JDSOWJBN	Job name

Job ID range for work selection:

Field Name
Description

JDSOWJIL
Job ID low limit

JDSOWJIH
Job ID high limit

JDSOWUCS
UCS name

JDSOWWTR
Writer name

JDSOFLG3
Work selection flags:

Bit Value
Description

JDSO3BRS
Select jobs with BURST=YES (if not set - select BURST=NO)

JDSO3HLD
Select jobs which are held (if not set - select jobs which are not held)

JDSO3ODH
Select output with OUTDISP=HOLD

JDSO3ODK
Select output with OUTDISP=KEEP

JDSO3ODL
Select output with OUTDISP=LEAVE

JDSO3ODW
Select output with OUTDISP=WRITE

JDSO3BNS
BURST value was not set (ignore JDSO3BRS)

JDSO3HNS
HOLD value was not set (ignore JDSO3HLD)

JDSOFLG4
More work Selection flags:

Bit Value
Description

JDSO4JOB
Job ID range is for JOB

JDSO4STC
Job ID range is for STC

JDSO4TSU
Job ID range is for TSU

Array of output classes This is a variable size array of fixed-size character strings which represent names of output classes.

Field Name
Description

JDSOWCLO
Offset from the beginning of DSECT to the first class

JDSOWCL#
Number of elements in array

JDSOWCLL
Length of each element

Array of form names This is a variable size array of fixed-size character strings which represent names of output forms.

Field Name
Description

JDSOWFMO
Offset from the beginning of DSECT to the first form name

JDSOWFM#
Number of elements in array

JDSOWFML
Length of each element

Array of processing mode names This is a variable size array of fixed-size character strings which represent names of processing modes.

Field Name	Description
JDSOWPMO	Offset from the beginning of DSECT to the first processing mode name
JDSOWPM#	Number of elements in array
JDSOWPML	Length of each element

Array of routing codes/destination ids This is variable size array of fixed-size character strings which represent routing codes or destination ids.

Field Name	Description
JDSOWDSO	Offset from the beginning of DSECT to the first route code/dest ID
JDSOWDS#	Number of elements in array
JDSOWDSL	Length of each element

Array of binary route codes for work selection This is variable size array of fixed-size structures, mapped by the JDD2DEST structure, of binary route codes used for work selection.

Field Name	Description
JDSOWRCO	Offset from the beginning of DSECT to the first route code
JDSOWRC#	Number of elements in array
JDSOWRCL	Length of each element

Work selection criteria in printable form. The work selection criteria string is represented in the format which would be used by appropriate JES configuration command.

Field Name	Description
JDSOWSCO	Offset from the beginning of DSECT to the work selection string
JDSOWSCL	Length of the work selection string

Work selection criteria in encoded form. The work selection criteria is encoded as an array of bytes, where the value of each byte represents an attribute used for work selection. (See symbol definitions for work selection attributes - JDWSxxxx.)

Field Name	Description
JDSOWSEO	Offset from the beginning of DSECT to the work selection array
JDSOWSEL	Length of the work selection array

SYSOUT receiver JES2 section (JDS2SRCV): The SYSOUT receiver device JES2 section contains attributes of SYSOUT receiver, which are specific to JES2.

Field Name	Description
JDS2LNG	Length of this section
JDS2TYPE	Section type
JDS2MOD	Section type modifier
JDS2DVID	Binary device ID

Job transmitter data header (JDXHJXMT): Header for job transmitter data. Data for the following devices may be returned within this header:

- NJE job transmitters
- OFFLOAD job transmitters

The total length of the data for a device is accounted for by the prefix section which follows this header structure. The prefix section will also identify the type of data returned in this header. For job transmitter devices the data (section) type is JDTYJBXM. The following sections could be returned within this header:

- Prefix section (always first) “Common prefix section (JDCXPREF)” on page 363
- Job transmitter common section “Job transmitter common data (JDXCJXMT)” on page 410
- Job transmitter JES2 section “Job transmitter JES2 section (JDX2JXMT)” on page 415
- Job transmitter NJE section “Job transmitter NJE section (JDXNJXMT)” on page 411
- Job transmitter OFFLOAD section “Job transmitter OFFLOAD section (JDXOJXMT)” on page 411
- Job information section “Common sections” on page 425

Field Name	Description
JDXHEYE	Eye catcher
JDXHOHDR	Offset to first (prefix) section

JDXHJPL8
Address of IAZJPLXI for this device

JDXHJPLX
31-bit part of the pointer

JDXHNEX8
Address of header of the next device

JDXHNEXT
31-bit part of the pointer

JDXHPAR8
Address of parent device (offload, line or NJE connection)

JDXHPARN
31-bit part of the pointer

Job transmitter common data (JDXCJXMT): Job transmitter common section. Contains common attributes of job transmitter device. Job transmitter devices are uniquely identified by the combination of device type (JDXCDEVT), device class (JDXCDEVC), device name (JDXCNAME) and name of the owning system (JDXCSYSN).

JDXCLNG
Length of this section

JDXCTYPE
Section type

JDXCMOD
Section type modifier

JDXCDEVT
Device type

JDXCDEVC
Device class: JDDCNJE for NJE devices and JDDCOFLD for OFFLOAD devices

JDXCNAME
Device name

JDXCSTAT
Device status (see common device status flags):

JDXCSTA1
First status byte

JDXCSTA2
Second status byte

JDXCSYSN
Owning MVS system name

JDXCMBRN
JESPLEX member name

JDXCSECL
Security label

JDXCCSTA
Status, character value

Job transmitter NJE section (JDXNJXMT): Job transmitter NJE section. Contains attributes specific for JES2 NJE job transmitters:

Field Name	Description
JDXNLNG	Length of this section
JDXNTYPE	Section type
JDXNMOD	Section type modifier

Values for attributes used for work selection. Job size range for work selection (records):

Field Name	Description
JDXNWJSL	job size low limit
JDXNWJSH	job size high limit

Work selection criteria in printable form. The work selection criteria string is represented in the format which would be used by appropriate JES configuration command.

Field Name	Description
JDXNWSCO	Offset from the beginning of DSECT to the work selection string
JDXNWSCL	Length of the work selection string

Work selection criteria in encoded form. The work selection criteria is encoded as an array of bytes, where the value of each byte represents an attribute used for work selection. (See symbol definitions for work selection attributes - JDWSxxxx.)

Field Name	Description
JDXNWSEO	Offset from the beginning of DSECT to the work selection array
JDXNWSEL	Length of the work selection array

Job transmitter OFFLOAD section (JDXOJXMT): Job transmitter OFFLOAD section. Contains attributes specific for OFFLOAD job transmitters.

Field Name	Description
JDXOLNG	Length of this section
JDXOTYPE	Section type

JDXOMOD
Section type modifier

JDXOFLG1
Processing flags:

Bit Value	**Description**
JDXO1NFY	Send notification message to TSO userid as requested
JDXO1STR	Start this receiver when OFFLOAD device is started

JDXODISP
Post-offload job disposition:

JDXODDEL	DELETE
JDXODHLD	HOLD
JDXODKP	KEEP

Values for attributes used for work selection:

Field Name	**Description**
JDXOWOWN	Name of job owner
JDXOWJBN	Job name
JDXOWSVN	Service class name
JDXOWSCH	Scheduling environment

Job ID range for work selection:

Field Name	**Description**
JDXOWJIL	Job ID low limit
JDXOWJIH	Job ID high limit

Job size range for work selection (records):

Field Name	**Description**
JDXOWJSL	Job size low limit
JDXOWJSH	Job size high limit

JDXOWFLG
Work selection flags:

Bit Value	Description
JDXOWHLD	Select held (HOLD=YES)
JDXOWRLS	Select non held (HOLD=NO) If neither bit set, select none (HOLD=NONE)
JDXOFANY	Default member affinity is ANY. (also see section starting with field JDXOWMBO).
JDXOWJOB	Job ID range is for JOB
JDXOWSTC	Job ID range is for STC
JDXOWTSU	Job ID range is for TSU

Array of job classes This is a variable size array of fixed-size character strings which represent names of job classes. The class array can also be viewed as a single string, which starts JDXOWCLO bytes from JDXOJXMT and which length is JDXOWCL#.

Field Name	Description
JDXOWCLO	Offset from the beginning of DSECT to the first job class or job class group name
JDXOWCL#	Number of elements in array
JDXOWCLL	Length of each element

Array of routing codes/destination ids This is variable size array of fixed-size character strings which represent routing codes or destination ids.

Field Name	Description
JDXOWDSO	Offset from the beginning of DSECT to the first route code/dest ID
JDXOWDS#	Number of elements in array
JDXOWDSL	Length of each element

Array of binary route codes for work selection This is variable size array of fixed-size structures, mapped by the JDD2DEST structure, of binary route codes used for work selection.

Field Name	Description
JDXOWRCO	Offset from the beginning of DSECT to the first route code
JDXOWRC#	Number of elements in array
JDXOWRCL	Length of each element

Array of MAS member names for work selection (member affinity) This is variable size array of fixed-size character strings which represent MAS member names used for work selection. NOTE: Check the JDXOFANY bit first before using these fields.

Field Name	Description
JDXOWMBO	Offset from the beginning of DSECT to the first MAS member name
JDXOWMB#	Number of elements in array
JDXOWMBL	Length of each element

Array of spool volume names for work selection This is variable size array of fixed-size character strings which represent spool volume names used for work selection.

Field Name	Description
JDXOWVLO	Offset from the beginning of DSECT to the first volume name
JDXOWVL#	Number of elements in array
JDXOWVLL	Length of each element

Work selection criteria in printable form. The work selection criteria string is represented in the format which would be used by appropriate JES configuration command.

Field Name	Description
JDXOWSCO	Offset from the beginning of DSECT to the work selection string
JDXOWSCL	Length of the work selection string

Work selection criteria in encoded form. The work selection criteria is encoded as an array of bytes, where the value of each byte represents an attribute used for work selection. (See symbol definitions for work selection attributes - JDWSxxxx.)

Field Name
Description

JDXOWSEO
Offset from the beginning of DSECT to the work selection array

JDXOWSEL
Length of the work selection array

Job transmitter JES2 section (JDX2JXMT): Job transmitter device JES2 section Contains attributes of job transmitter, which are specific to JES2.

Field Name
Description

JDX2LNG
Length of this section

JDX2TYPE
Section type

JDX2MOD
Section type modifier

JDX2DVID
Binary device ID

SYSOUT transmitter data header (JDYHSXMT): Header for SYSOUT transmitter data. Data for the following devices may be returned within this header: - NJE SYSOUT transmitters - OFFLOAD SYSOUT transmitters Total length of the data for a device is accounted for by the prefix section which follows this header structure. The prefix section will also identify the type of data returned in this header. For SYSOUT transmitter devices the data (section) type is JDTYSYXM. The following sections could be returned within this header:

- Prefix section (always first) “Common prefix section (JDCXPREF)” on page 363
- SYSOUT transmitter common section “SYSOUT transmitter common section (JDYCSXMT)” on page 416
- SYSOUT transmitter JES2 section “SYSOUT transmitter device JES2 section (JDY2SXMT)” on page 422
- SYSOUT transmitter NJE section “SYSOUT transmitter NJE section (JDYNSXMT)” on page 416
- SYSOUT transmitter OFFLOAD section “SYSOUT transmitter OFFLOAD section (JDYOSXMT)” on page 418
- Job information section “Common sections” on page 425

Field Name
Description

JDYHEYE
Eye catcher

JDYHOHDR
Offset to first (prefix) section

JDYHJPL8
Address of IAZJPLXI for this device

JDYHJPLX
31-bit part of a pointer

JDYHNEX8
Address of header of the next device

JDYHNEXT
31-bit part of the pointer

JDYHPAR8
Address of parent device (offload, line or NJE connection)

JDYHPARN
31-bit part of the pointer

SYSOUT transmitter common section (JDYCSXMT): SYSOUT transmitter common section. Contains common attributes of SYSOUT transmitter devices. SYSOUT transmitter devices are uniquely identified by the combination of device type (JDYCDEVT), device class (JDYCDEVC), device name (JDYCNAME) and name of the owning system (JDYCSYSN).

Field Name	Description
JDYCLNG	Length of this section
JDYCTYPE	Section type
JDYCMOD	Section type modifier
JDYCDEVT	Device type
JDYCDEVC	Device class: JDDCNJE for NJE devices JDDCOFLD for OFFLOAD devices
JDYCNAME	Device name
JDYCSTAT	Device status (see common device status flags):
JDYCSTA1	First status byte
JDYCSTA2	Second status byte
JDYCSYSN	Owning MVS system name
JDYCMBRN	JESPLEX member name
JDYCSECL	Security label
JDYCCSTA	Status, character value

SYSOUT transmitter NJE section (JDYNSXMT): SYSOUT transmitter NJE section. Contains attributes specific for JES2 NJE SYSOUT transmitters.

Field Name	Description
JDYNLNG	Length of this section

JDYNTYPE
Section type

JDYNMOD
Section type modifier

Values for attributes used for work selection. Dataset size range for work selection (records):

Field Name	Description
JDYNWDSL	Dataset size low limit
JDYNWDSH	Dataset size high limit

SYSOUT size range for work selection (pages):

JDYNWPLL
Page limit - low limit

JDYNWPLH
Page limit - high limit

JDYNFLAG
Work selection flags:

Bit Value	Description
JDYNFODH	Select output with OUTDISP=HOLD
JDYNFODK	Select output with OUTDISP=KEEP
JDYNFODL	Select output with OUTDISP=LEAVE
JDYNFODW	Select output with OUTDISP=WRITE

Work selection criteria in printable form. The work selection criteria string is represented in the format which would be used by appropriate JES configuration command.

Field Name	Description
JDYNWSCO	Offset from the beginning of DSECT to the work selection string
JDYNWSCL	Length of the work selection string

Work selection criteria in encoded form. The work selection criteria is encoded as an array of bytes, where the value of each byte represents an attribute used for work selection. (See symbol definitions for work selection attributes - JDWSxxxx.)

Field Name
Description

JDYNWSEO
Offset from the beginning of DSECT to the work selection array

JDYNWSEL
Length of the work selection array

SYSOUT transmitter OFFLOAD section (JDYOSXMT): SYSOUT transmitter OFFLOAD section. Contains attributes specific for JES2 OFFLOAD SYSOUT transmitters.

Field Name	Description
JDYOLNG	Length of this section
JDYOTYPE	Section type
JDYOMOD	Section type modifier
JDYOFLG1	Processing flags:

Bit Value	Description
JDYO1NFY	Send notification message to TSO userid as requested
JDYO1STR	Start this transmitter when OFFLOAD device is started

JDYODISP
Post-offload SYSOUT disposition:

JDYODDEL	DELETE
JDYODHLD	HOLD
JDYODKP	KEEP

Values for attributes used for work selection:

Field Name	Description
JDYOWFCB	FCB name
JDYOWFLH	Flash ID
JDYOWOWN	Dataset owner/creator
JDYOWJBN	Job name

Dataset size for work selection (records):

Field Name
Description

JDYOWDLL
Dataset size low limit

JDYOWDHL
Dataset size high limit

SYSOUT size for work selection (pages):

Field Name
Description

JDYOWPLL
Page limit - low limit

JDYOWPLH
Page limit - high limit

Job ID range for work selection:

Field Name
Description

JDYOWJIL
Job ID low limit

JDYOWJIH
Job ID high limit

JDYOWUCS
UCS name

JDYOWWTR
Writer name

JDYOWPTY
Output priority

JDYOWFLG
Work selection flags:

Bit Value
Description

JDYOWBRS
Select SYSOUT with BURST=YES (if not set - select BURST=NO)

JDYOWHLD
Select output which is held (if not set - select output which is not held)

JDYOWODH
Select output with OUTDISP=HOLD

JDYOWODK
Select output with OUTDISP=KEEP

JDYOWODL
Select output with OUTDISP=LEAVE

JDYOWODW
Select output with OUTDISP=WRITE

JDYOWBNS
BURST value was not set (ignore JDYOWBRS)

JDYOWHNS
HOLD value was not set (ignore JDYOWHLD)

Array of output classes This is a variable size array of fixed-size character strings which represent names of output classes.

Field Name	Description
JDYOWCLO	Offset from the beginning of DSECT to the first output class
JDYOWCL#	Number of elements in array
JDYOWCLL	Length of each element

Array of form names This is a variable size array of fixed-size character strings which represent form names.

Field Name	Description
JDYOWFMO	Offset from the beginning of DSECT to the first form name
JDYOWFM#	Number of elements in array
JDYOWFML	Length of each element

Array of processing modes This is a variable size array of fixed-size character strings which represent names of processing modes.

Field Name	Description
JDYOWPMO	Offset from the beginning of DSECT to the first processing mode name
JDYOWPM#	Number of elements in array
JDYOWPML	Length of each element

Array of routing codes/destination IDs. This is variable size array of fixed-size character strings which represent routing codes or destination IDs.

Field Name	Description
JDYOWDSO	Offset from the beginning of DSECT to the first route code/dest ID
JDYOWDS#	Number of elements in array

JDYOWDSL
Length of each element

Array of binary route codes for work selection This is variable size array of fixed-size structures, mapped by the JDD2DEST structure, of binary route codes used for work selection.

Field Name
Description

JDYOWRCO
Offset from the beginning of DSECT to the first route code

JDYOWRC#
Number of elements in array

JDYOWRCL
Length of each element

Array of spool volume names for work selection This is variable size array of fixed-size character strings which represent spool volume names used for work selection.

Field Name
Description

JDYOWVLO
Offset from the beginning of DSECT to the first volume name

JDYOWVL#
Number of elements in array

JDYOWVLL
Length of each element

Work selection criteria in printable form. The work selection criteria string is represented in the format which would be used by appropriate JES configuration command.

Field Name
Description

JDYOWSCO
Offset from the beginning of DSECT to the work selection string

JDYOWSCL
Length of the work selection string

Work selection criteria in encoded form. The work selection criteria is encoded as an array of bytes, where the value of each byte represents an attribute used for work selection. (See symbol definitions for work selection attributes - JDWSxxxx.)

Field Name
Description

JDYOWSEO
Offset from the beginning of DSECT to the work selection array

JDYOWSEL
Length of the work selection array

JDYOWFL2
Work selection flags:

Bit Value	Description
JDYO2JOB	Job ID range is for JOB
JDYO2STC	Job ID range is for STC
JDYO2TSU	Job ID range is for TSU

SYSOUT transmitter device JES2 section (JDY2SXMT): SYSOUT transmitter device JES2 section Contains attributes of SYSOUT transmitter, which are specific to JES2.

Field Name	Description
JDY2LNG	Length of this section
JDY2TYPE	Section type
JDY2MOD	Section type modifier
JDY2DVID	Binary device ID

NJE connection data header (JDJHNJEC): Header for NJE connection data. Data for NJE connection is returned within this header. Total length of this data is accounted for by the prefix section which follows this header structure. The prefix section will also identify the type of data returned in this header. For NJE connection the data (section) type is JDTYNJEC. The following sections could be returned within this header:

- Prefix section (always first) "Common prefix section (JDCXPREF)" on page 363
- NJE connection common section "NJE connection common section (JDJCNJEC)" on page 423
- SNA application section (NJE over SNA) "SNA application section (JDAPPLIC)" on page 425(attributes of a peer application)
- SNA application JES2 section "SNA application JES2 section (JDA2APPL)" on page 426
- TCP socket section (NJE over TCP/IP) "TCP socket section (JDSKSOCK)" on page 426(attributes of a peer socket)
- TCP socket JES2 section "TCP socket JES2 section (JDK2SOCK)" on page 427

Data for devices related to that NJE connection is chained to this header using JDJHDEVC pointer. Number of devices in the chain is in JDJHDEV#. Data returned for each related device will have its own unique header structure. Depending on the type of NJE connection, devices related to NJE connection include:

- NJE job transmitters (see "Job transmitter data header (JDXHJXMT)" on page 409)
- NJE job receivers (see "Job receiver data header (JDBHJRCV)" on page 398)
- NJE SYSOUT transmitters (see "SYSOUT transmitter data header (JDYHSXMT)" on page 415)
- NJE SYSOUT receivers (see "SYSOUT receiver device data header (JDSHSRCV)" on page 403)

- Line device (see “Line device data header (JDLHLINE)” on page 371)
- NETSRV device (see “NETSRV device header (JDNHNSRV)” on page 368)
- Logon device (see “Logon device data header (JDGHLOGN)” on page 366)

Note: This data is not returned if dominance check of SSI caller security label vs security label of the adjacent node fails (see JDJCDNSL).

Field Name
    Description

JDJHEYE
    Eye catcher

JDJHOHDR
    Offset to first (prefix) section

JDJHDEV#
    Number of related devices in the chain (see JDJHDEV8)

JDJHJPL8
    Address of IAZJPLXI for this device

    JDJHJPLX
        31-bit part of a pointer

JDJHNEX8
    Address of header of the next NJE connection

    JDJHNEXT
        31-bit part of the pointer

JDJHDEV8
    Address of header of the first related device

    JDJHDEVC
        31-bit part of the pointer

NJE connection common section (JDJCNJEC): NJE Connection common section. Contains common attributes of NJE connection. NJE connection is uniquely identified by the NJE connection name (JDJCNAME), communication protocol type (JDJCPROT) and name of the owning system (JDJCSYSN).

Field Name
    Description

JDJCLNG
    Length of this section

JDJCTYPE
    Section type

JDJCMOD
    Section type modifier

JDJCNAME
    NJE connection name

JDJCSYSN
    Owning MVS system name

JDJCMBRN
    JESPLEX member name

JDJCADJN
    Adjacent node name

JDJCNDSL
Adjacent node security label

JDJCSTAT
NJE connection status (see common device status flags):

JDJCSTA1
First status byte

JDJCSTA2
Second status byte

JDJCPROT
Communication protocol type:

Field Name	Description
JDJCPBSC	BSC
JDJCPSNA	SNA
JDJCPTCP	TCP/IP

JDJCFLAG
Processing flags:

Bit Value	Description
JDJCFAUT	Auto restart
JDJCFTRB	Basic trace requested
JDJCFTCM	Common code trace requested
JDJCFTEX	Extended trace requested
JDJCFCND	Auto connect required (CONNECT=YES)
JDJCFCNA	Auto connect not required (CONNECT=NO) if both JDJCFCNA and JDJCFCNN are off, CONNECT=DEFAULT

JDJCNAM2
Associated device name:

- Line device name for BSC
- Logon device name for SNA
- NETSRV name for TCP/IP

JDJCRINT
Auto restart interval (minutes)

JDJCRETR
Maximum number of restart retries (0 - indefinite retry)

JDJCSTR#
Number of SYSOUT transmitters

JDJCSRC#
Number of SYSOUT receivers

JDJCJTR#
Number of job transmitters

JDJCJRC#
Number of job receivers

JDJCSKID
TCP/IP socket ID assigned by NETSRV (NJE over TCP/IP)

JDJCCSTA
Status, character value

Storage management control block DSECT (JDSGSTRG): Storage management fields are for use by the subsystem only. The SSJDSTRP field in SSJD points to a chain of these control blocks. This storage is accessible to a caller but protected from modification.

Field Name
Description

JDSGEYE
Eye-catcher

JDSGSTHL
Length of header area

JDSGSTSP
Subpool of this block

JDSGSTPL
Recommended subpool to use

JDSGSTTL
Total length of this block (including this header)

JDSGNEXT
Pointer to next block

JDSGAVL
Pointer to first available byte

JDSGDATA
Start of data in the block

Common sections: The following structures represent common data sections. These sections can be returned for devices of different types.

SNA application section (JDAPPLIC): The SNA application section contains attributes of SNA applications. This section can be returned with the following information:

- Data for NJE connection over SNA (reports attributes of a peer application)
- Data for SNA line used for NJE (reports attributes of a peer application)
- Logon device used for NJE connection (reports attributes of a local application)

Field Name
Description

JDAPLNG
Length of this section

JDAPTYPE
Section type

JDAPMOD
Section type modifier

JDAPNAME
VTAM application name

JDAPLOGM
VTAM logmode

JDAPREST
Application resistance

JDAPCMPT
Compaction table name

SNA application JES2 section (JDA2APPL): The SNA application JES2 section contains JES2-only attributes of SNA application. This section can be returned with the following information:

- Data for NJE connection over SNA (reports attributes of a peer application)
- Data for SNA line used for NJE (reports attributes of a peer application)
- Logon device used for NJE connection (reports attributes of a local application)

Field Name
Description

JDA2LNG
Length of this section

JDA2TYPE
Section type

JDA2MOD
Section type modifier

JDA2LNAM
Associated line name

JDA2LGNM
Associated logon name

JDA2LNDV
Associated line device ID

JDA2LGDV
Associated logon device ID

TCP socket section (JDSKSOCK): The TCP socket data section contains attributes of a TCP socket. This section can be returned with the following information:

- Data for NJE connection over TCP/IP (reports attributes of a peer socket)
- Data for TCP/IP line used for NJE (reports attributes of a peer socket)
- NETSRV device used for NJE connection (reports attributes of a local socket)

Field Name
Description

JDSKLNG
Length of this section

JDSKTYPE
Section type

JDSKMOD
Section type modifier

JDSKNAME
Socket name

JDSKIHNO
Offset to the IP host name from the section start

JDSKIHNL
Length of the IP host name

JDSKIADR
IP address

JDSKTPNM
TCP port name

JDSKTPNR
TCP port number

JDSKNSRV
NETSRV name

JDSKFLAG
Socket flags:

Bit Value
Description

JDSKFTLS
Secure socket (TLS)

JDSKFSRV
Server-type socket - dynamically created for inbound (passive) TCP connections

TCP socket JES2 section (JDK2SOCK): The TCP socket data JES2 section contains attributes of a TCP socket. This section can be returned with the following information:

- Data for NJE connection over TCP/IP (reports attributes of a peer socket)
- Data for TCP/IP line used for NJE (reports attributes of a peer socket)
- NETSRV device used for NJE connection (reports attributes of a local socket)

Field Name
Description

JDK2LNG
Length of this section

JDK2TYPE
Section type

JDK2MOD
Section type modifier

JDK2LNAM
Associated line name

JDK2LNDV
Associated line device ID

JDK2NSDV
Associated NETSRV device ID

JDK2REST
Socket resistance

Current job information section (JDJBINFO): This section reports the job-level information on the currently active job on the device. This section is optional and is only returned if the device is currently processing a job. Depending on the version of JES and the type of device, some fields might not be reported.

Note that the job information is only available if the security label of the caller dominates the security label of the job owner.

Field Name	Description
JDJBLNG	Length of this section
JDJBTYPE	Section type. Set to JDTYJOBI by the subsystem.
JDJBMOD	Section type modifier. Set to JDMDJBCM by the subsystem.
JDJBJOBN	Name of the job being processed
JDJBJOBI	Job ID of the job being processed
JDJBJNUM	Job number of the job being processed
JDJBOWNN	Name of the owner of the job, or name of the creator of the SYSOUT dataset being processed by the device
JDJBOWSL	Security label of the owner of the job, or of the creator of the SYSOUT dataset being processed by the device
JDJBJOBC	Job class of the job being processed
JDJBPRIO	Job priority
JDJBJTYP	Job type Possible values: **JDJBSTC** Started Task (STC) **JDJBTSU** Time Sharing User (TSU) **JDJBJOB** Batch job (JOB)

Job-level progress counters (for devices that process jobs rather than SYSOUT data sets):

Field Name
Description

JDJBTRC#
Total records in the job

JDJBPRC#
Number of job records processed

Current output information section (JDUTINFO): This section contains the information on the SYSOUT data set currently processed by the device. This section is optional and is only returned if the device is processing a SYSOUT dataset.

Note that the SYSOUT data set information is only available if the security label of the caller dominates the security label of the owner or creator of the SYSOUT data set.

Field Name
Description

JDUTLNG
Length of this section

JDUTTYPE
Section type. Set to JDTYOUTI by the subsystem.

JDUTMOD
Section type modifier. Set to JDMDOTCM by the subsystem.

JDUTOUTC
Output class of the SYSOUT data set being processed

JDUTFORM
Current form name

JDUTPRMD
Current processing mode (PRMODE)

JDUTWRTN
Current writer name

JDUTTJBN
Transaction job name (for transactional output)

JDUTTWKI
Transaction work ID (for transactional output)

JDUTFLSH
Current flash ID (FLASH)

JDUTFCB
Current Forms Control Buffer (FCB) name

JDUTUCS
Current Universal Character Set (UCS) name

JDUTDEST
Current destination ID

JDUTPRIO
Output priority

JDUTFLG1
Flags:

Bit Value
Description

JDUT1BRS
Burst setting (ON=YES, OFF=NO)

Progress counters of active SYSOUT data set:

Field Name
Description

JDUTTPG#
Total pages in the SYSOUT data set

JDUTPPG#
Number of pages processed

JDUTTRC#
Total records in the SYSOUT dataset

JDUTPRC#
Number of records processed

Current output information JES2 section (JDU2INFO): This section contains the SYSOUT data set information specific to JES2. This section is an expansion to the current output information section ("Current output information section (JDUTINFO)" on page 429).

Field Name
Description

JDU2LNG
Length of this section

JDU2TYPE
Section type. Set to JDTYOUTI by the subsystem.

JDU2MOD
Section type modifier. Set to JDMDOTJ2 by the subsystem.

JDU2JOID
Job Output Element (JOE) identifier of the SYSOUT data set currently processed by the device

This identifier consists of the following elements:

JDU2JOEN
Name of the JOE

JDU2JOE1
JOE ID field 1

JDU2JOE2
JOE ID field 2

JDU2IMQT
JES2 spool record address (MQTR) of a spin IOT (same MQTR format as used for spool read SSI)

JDU2DEST
Binary route code/destination ID of the SYSOUT data set

The value of this field is mapped by the binary route code structure ("Binary route code structure (JDD2DEST)" on page 431)

This field consists of the following elements:

JDU2NDE
NJE node number (nodal part)

JDU2RTE
Remote workstation number (remote part)

JDU2USER
User name (user ID part)

Current output information JES3 section (JDU3INFO): This section contains the SYSOUT data set information specific to JES3. This section is an expansion to the current output information section ("Current output information section (JDUTINFO)" on page 429).

Field Name	Description
JDU3LNG	Length of this section
JDU3TYPE	Section type. Set to JDTYOUTI by the subsystem.
JDU3MOD	Section type modifier. Set to JDMDOTJ3 by the subsystem.
JDU3COPY	Copy count

Binary route code structure (JDD2DEST): The structure definition maps a JES2 binary route code.

Field Name	Description
JDD2NODE	NJE node number (nodal part)
JDD2RTE	Remote workstation number (remote part)
JDD2USER	User name (user ID part)

Modify Job Function Call — SSI Function Code 85

The modify job function call (SSI function code 85) allows a user-supplied program to modify job properties and to manage memory associated with the request. For z/OS 2.1, only JES2 subsystems support the job modification SSI.

Modifying a job requires a specific level of security access, depending on the requested action. This access is defined using JESJOBS profiles, which are described in the *Controlling who can modify job attributes using the Job Modify SSI 85* section in *z/OS Security Server RACF Security Administrator's Guide*.

Additional security checks are made in the requestor's address space for access to alter the job that is being processed. These security checks use the JESJOBS class and require additional resource names for the major actions that can be performed. Table 12 on page 432 describes the JESJOBS entity names that are used.

Table 12. SSI 85 actions, JESJOBS class entities and Required access

SSI 85 action	JESJOBS class entity	Required access
Modify	MODIFY.*nodename.userid.jobname*	Update
Hold	HOLD.*nodename.userid.jobname*	Update
Release	RELEASE.*nodename.userid.jobname*	Update
Purge	PURGE.*nodename.userid.jobname*	Alter
Cancel	CANCEL.*nodename.userid.jobname* - Existing profile	Alter
Restart	RESTART.*nodename.userid.jobname*	Control
Spin	SPIN.*nodename.userid.jobname*	Control
Reroute execution	REROUTE.*nodename.userid.jobname*	Update
Start	START.*nodename.userid.jobname*	Control

Modify job request types

The IAZSSJM modify job SSI does not require callers to be PSW key/state authorized. The IAZSSJM SSI does not support being broadcast, but it can be directed to any subsystem, including subsystems that run independently of any JES environment.

In z/OS 2.1, SSI85 supports two functions: modifying a job and any memory management that is required by the request. IAZSSJM supports the same filtering capabilities as Extended Status SSI 80 (macro IAZSSST).

IAZSSJM supports all of the following actions against jobs (JQEs):

- Modify job characteristics ($T) – specifically job class, priority (absolute or relative), SYSAFF (replacement list of JES members or MVS systems), service class, WLM scheduling environment or offload status (OFFS=).
- Hold a job ($H)
- Release a job ($A)
- Purge a job ($P)
- Cancel a job ($C) – with options to purge, dump, force or ARM restart.
- Restart a job ($E) – with the cancel or step and hold options
- SPIN a job ($T,SPIN) – with the optional DDNAME option.
- Change execution node ($R XEQ) – only before the execution phase.
- Start a job ($S)

Each of these items is an ACTION on the modify job function. Only one action is permitted per SSI call, but the action can operate on an arbitrary number of jobs.

Additional action-dependent data is included with a mask to indicate which fields are set. For example, to modify the job class for a job, a bit indicates that a new class was specified, with a new field for the updated class. Flags are provided to specify options, such as the purge option on the cancel action.

Type of Request

Directed SSI call only.

Use information

To use the modify job SSI, a caller must select one action to take. Only one action can be specified per call, but the action can run on an unlimited number of selected jobs.

Next, the caller must decide which filters to use. A filter is an attribute that a job or SYSOUT must possess to be processed by the interface. Filters exist at the job or SYSOUT level, and are independent of the type of action being taken.

A typical filter has some value associated with it, such as JOBNAME with value of TOMW. However, some filters do not have values associated with them, such as filters for jobs that are held. If no filters are applied, the modify job function call is returned with an error. Because the number of jobs and SYSOUT in the system can be large, it is recommended that a filter be specified to limit the jobs that the action runs on.

When an application calls SSI 85, the SSI clears any output areas that are passed in to the SSI. SSI 85 considers it residual data and clears it to avoid any confusion with the jobs that are selected for the current request. Each SSI 85 call results in one set of output areas that must be processed before making another SSI 85 request.

For JES2 subsystems, jobs processed through this SSI can be obtained from a local copy of JES2's work queues. SSI 85 processes job or SYSOUT data to determine whether the job should be selected for the modify request. When JES2 gets the request to modify the job, the job might no longer be in a state where the modify request is allowed, in which case the request is rejected.

The modify job SSI can operate synchronously or asynchronously, as specified by the input processing option flag byte SSJMOPT1. Turn the SSJMPSYN bit ON to indicate that the SSI is to perform the requested job modify action synchronously. For a synchronous request, the job modify SSI does not return control to the caller until the job modify action has been processed for every selected job and results of the request are available to be returned to the caller. A synchronous request provides results of the job modify action for each job so the user can analyze which jobs were modified successfully and which ones were unable to be modified, with the reason why any job could not be modified.

If you do not require feedback on the results of the job modify action, you can use an asynchronous request. For an asynchronous request, the job modify SSI returns control to the caller once all selected jobs are queued to JES2. The caller does not get feedback on the results of the job modify action, but gets control back more quickly using an asynchronous request.

The modify job request does not provide a method to freeze the job status in the system. Other SAPI applications, JES writers, networking writers and operators can change the state of any job that has been selected or updated by the job modify request. The job status might allow the job to be selectable at the time of a job modify request, but by the time the action is performed, the job status might no longer allow the job to be modified. Likewise, after job properties are modified by a job modify request, they might be changed by some other process before the SSI caller processes the job feedback information from SSI 85.

The response to a modify job request includes an output feedback element (SSJF) for each job that is selected to be modified. The elements are chained together and are anchored by the SSJMSJF8/SSJMSJFP field in IAZSSJM(SSJM).

Issued to

- A JES2 subsystem (either primary or secondary) as a directed request.

Related SSI Codes

None.

Related Concepts

None.

Environment

The caller (issuer of the IAZSSJM macro) must include the following mapping macros:

- CVT
- IEFJESCT

Data areas commonly referenced are mapped by the following mapping macros. IBM recommends you include them in your program:

- IEFSSOBH
- IEFJSSIB
- IAZSSJM

The caller must meet the following requirements:

Caller variable	**Caller value**
Minimum Authorization	Problem state, any PSW key.
Dispatchable unit mode	Task
AMODE	24-bit or 31-bit
Cross memory mode	PASN=HASN=SASN
ASC mode	Primary
Interrupt status	Enabled for I/O and external interrupts
Locks	No locks held
Control Parameters	The SSOB, SSIB, and IAZSSJM control blocks can reside above or below 16 megabytes in virtual storage.
Recovery	The caller should provide an ESTAE-type recovery environment. See *z/OS MVS Programming: Assembler Services Guide* for more information about an ESTAE-type recovery environment.

Figure 29 on page 435 shows the environment at the time of the call for SSI function code 85.

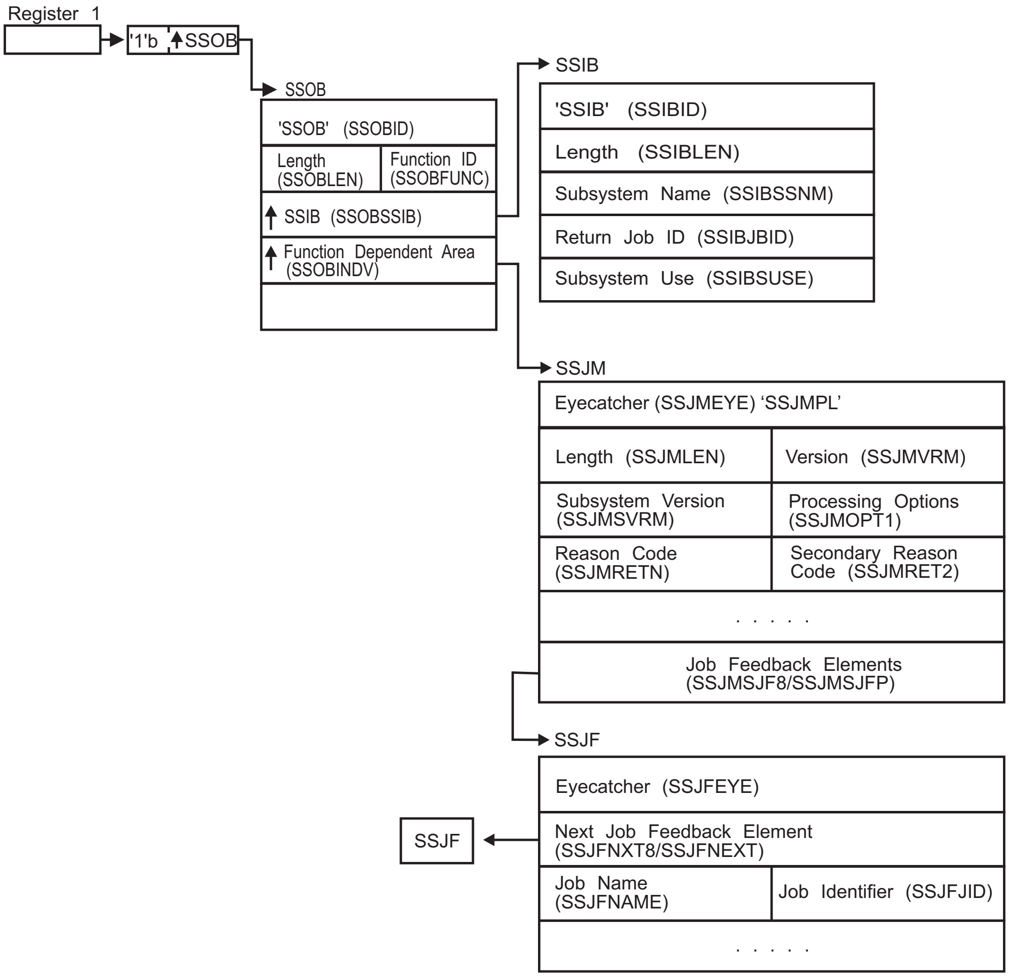
Register 1
'1'b
SSOB
SSOB
'SSOB' (SSOBID)
Length (SSOBLEN)
Function ID (SSOBFUNC)
SSIB (SSOBSSIB)
Function Dependent Area (SSOBINDV)
SSIB
'SSIB' (SSIBID)
Length (SSIBLEN)
Subsystem Name (SSIBSSNM)
Return Job ID (SSIBJBID)
Subsystem Use (SSIBSUSE)
SSJM
Eyecatcher (SSJMEYE) 'SSJMPL'
Length (SSJMLEN)
Version (SSJMVRM)
Subsystem Version (SSJMSVRM)
Processing Options (SSJMOPT1)
Reason Code (SSJMRETN)
Secondary Reason Code (SSJMRET2)
. . . . .
Job Feedback Elements (SSJMSJF8/SSJMSJFP)
SSJF
Eyecatcher (SSJFEYE)
Next Job Feedback Element (SSJFNXT8/SSJFNEXT)
SSJF
Job Name (SSJFNAME)
Job Identifier (SSJFJID)
. . . . .

Figure 29. Environment at Time of Call for SSI Function Code 85

Input Register Information

Before issuing the IAZSSJM macro, the caller must ensure that the following general purpose registers contain:

Register	**Contents**
1	Address of a 1-word parameter list that has the high-order bit on and a pointer to the SSOB control block in the low-order 31 bits.
13	Address of a standard 18-word save area

Input parameters

Input parameters for the function routine are:

- SSOB
- SSIB
- IAZSSJM

SSOB Contents: The caller sets the following fields in the SSOB control block on input:

Field Name	Description
SSOBID	Identifier ‘SSOB’
SSOBLEN	Length of the SSOB (SSOBHSIZ) control block
SSOBFUNC	SSI function code 85 (SSOBSSJM)
SSOBSSIB	Address of an SSIB control block or zero (if this field is zero, the life-of-job SSIB is used). See “Subsystem Identification Block (SSIB)” on page 8 for more information on the life-of-job SSIB.
SSOBINDV	Address of the function-dependent area (IAZSSST control block).

Set all other fields in the SSOB control block to binary zeros before issuing the IEFSSREQ macro.

SSIB Contents: If you do not use the life-of-job SSIB, the caller must provide an SSIB and set the following fields in the SSIB control block on input:

Field Name	Description
SSIBID	Identifier ‘SSIB’
SSIBLEN	Length of the SSIB (SSIBSIZE) control block
SSIBSSNM	Subsystem name — name of the subsystem to which this extended status function call is directed (or MSTR if it is to be broadcast).

Set all other fields in the SSIB control block to binary zeros before issuing the IEFSSREQ macro.

IAZSSJM Contents: The caller must set the following fields in the IAZSSJM control block on input:

Specify SSJM1CHR and SSJMZOMO to identify for the SSI service which characters in selection EBCDIC strings are wildcard characters. If SSJM1CHR and SSJMZOMO are not specified, the default wildcard characters are "?" for SSJM1CHR and "*" for SSJMZOMO. If either value is not X'00' (if either is specified), then both provided values are used even if one value is X'00'.

It is an error to specify equal values for SSJM1CHR and SSJMZOMO, unless the equal values are X'00'. If both values are X'00', the default values are used.

Job Modification Action Input Parameters: The following fields specify input parameters used to define the job modification action to be taken on selected jobs. These fields are only relevant when their corresponding job modify action is requested. Fields SSJMOPT1 and SSJMTYPE are supplied for any job modify action.

SSJMOPT1
Input processing option:

Flag	Description
SSJMPD64	ON - Return output in 64-bit virtual storage.
SSJMPSYN	SYNC request (ON) or ASYNC request (OFF).

SSJMTYPE
The input request type:

Request type	Description
SSJMHOLD (4)	Hold selected jobs.
SSJMRLS (8)	Release selected jobs.
SSJMPRG (12)	Purge selected jobs.
SSJMCANC (16)	Cancel selected jobs.
SSJMSTRT (20)	Start selected jobs.
SSJMRST (24)	Restart selected jobs.
SSJMSPIN (28)	SPIN selected jobs.
SSJMJCHR (32)	Change characteristics of selected jobs.
SSJMNODE (36)	Change execution node of selected jobs.
SSJMRSTG (128)	Release storage.

SSJMHOLD, SSJMRLS and SSJMSTRT are job modify actions that do not require additional input parameters. The remaining action types require additional input parameters, and are described below.

SSJMPFLG
Job purge (SSJMPRG) option flags:

Flag	Description
SSJMPPRT	Perform a protected cancel/purge of the jobs.

SSJMCFLG
Job cancel (SSJMCANC) option flags:

Flag **Description**

SSJMCDMP
Dump the cancelled jobs if waiting for conversion, in conversion, or in execution.

SSJMCPRT
Perform a protected cancel/purge of the jobs.

SSJMCFRC
Force cancel the jobs, even if marked.

SSJMCARM
Request that automatic restart management automatically restart the selected jobs after they are cancelled.

SSJMCPRG
Purge output of the cancelled jobs.

SSJMEFLG
Job restart (SSJMRST) option flags:

Flag	Description
SSJMECAN	Cancel and hold the restarted jobs prior to execution.
SSJMERES	Restart the selected jobs at the next processing step once the current step completes.
SSJMESTH	Hold and re-queue the restarted jobs for execution once the current step completes.

SSJMTSFL
Job SPIN (SSJMSPIN) option flags:

Flag	Description
SSJMTSDD	SPIN only the data set specified in SSJMTSDN. Otherwise, SPIN all eligible data sets.

SSJMTSDN
If SSJMTSDD is ON, specifies the data set name to SPIN.

SSJMRNOD
Change Execution Node (SSJMNODE) request: the name of the node to route jobs to.

SSJMCOP1
Change characteristics (SSJMJCHR) request options:

Flag	Description
SSJMCJBC	Change the job class of the selected jobs to the class specified in SSJMJBCL.
SSJMCSVC	Change the service class of the selected jobs to the class specified in SSJMSVCL.
SSJMCSCH	Change WLM scheduling environment of the selected jobs to the WLM scheduling environment specified in SSJMSCEV.

SSJMCPRA
Change the priority of the selected jobs to the priority specified in SSJMJPRI (absolute priority). Mutually exclusive with SSJMCPRR.

SSJMCPRR
Change the priority of the selected jobs to the current priority PLUS the value in SSJMJPRI (relative priority - SSJMJPRI can be negative). Mutually exclusive with SJMCPRA.

SSJMCOFL
Mark that selected jobs are offloaded on offload devices specified (by number) in the SSJMOLST offload device list. Mutually exclusive with SSJMCNOF.

SSJMCNOF
Mark that selected jobs are NOT offloaded on offload devices specified (by number) in the SSJMOLST offload device list. Mutually exclusive with SSJMCOFL.

SSJMCAFF
Change characteristics (SSJMJCHR) affinity options:

Flag **Description**

SSJMCANY
Selected jobs are eligible to run on ANY member (SYSAFF=ANY).

SSJMCRPL
REPLACE the affinity list of selected jobs using the members listed in the SSJMCMBP affinity member list.

SSJMCADD
ADD TO the current affinity list of selected jobs using the members listed in the SSJMCMBP affinity member list.

SSJMCDEL
DELETE FROM the current affinity list of selected jobs using the members listed in the SSJMCMBP affinity member list.

SSJMJBCL
Change job class of selected jobs to this value. This option is only relevant when the SSJMCJBC option bit is set.

SSJMSVCL
Change service class of selected jobs to this value. This option is only relevant when the SSJMCSVC option bit is set.

SSJMSCEV
Change WLM scheduling environment of selected jobs to this value. This option is only relevant when the SSJMCSCH option bit is set.

SSJMOLST
List of offload device numbers. Each value is 1 byte and can have a value from 1-8. The list terminates with a 0. This option is only relevant when the SSJMCOFL or SSJMCNOF option bit is set.

SSJMJPRI
Change priority of the selected jobs using this value. This option is only relevant when the SSJMCPRA (absolute) or SSJMCPRR (relative) option bit is set. This value can be negative for processing a relative request.

SSJMCMBN
Member name count. This option is only relevant when one of the SSJMCRPL, SSJMCADD, or SSJMCDEL options are specified.

SSJMCMBP
Pointer to 4-byte member name list. This option is only relevant when one of the SSJMCRPL, SSJMCADD, or SSJMCDEL options are specified. This list is a count followed by a pointer to a list of 4 byte member names. For example, to set 'MB1','MB2','MB3', set:

- SSJMJMLN = F'3' 3 members in the list
- SSJMJMMP = A(MBRLIST) Pointer to member list
- MBRLIST = CL4'MB1 ',CL4'MB2 ',CL4'MB3 '

'* ' can be specified to denote the issuing member instead of explicitly specifying a member name. Optionally, Independent mode (SYSAFF=IND) can also be specified in the list using 'IND '.

Job Filter Indicator Input Parameters: The following fields specify indicators of which job filters to use to select jobs to be processed.

Field Name
Description

SSJM1CHR
One byte value that indicates a one character wild card.

SSJMZOMO
One byte value that indicates a zero or more characters wild card

SSJMSEL1
Flag byte which describes the filters to use to select jobs. Each bit corresponds to a filter field which must match any job returned.

Bit Name
Description

SSJMSCLS
Apply job class filter in SSJMCLSL or SSJMCLSP. Only one class needs to match. If only specifying one class, it must be specified in SSJMCLSL.

SSJMSDST
Use SSJMDEST and SSJMDSTP as filters (Match any one dest). Apply default destination filter in SSJMDEST or SSJMDSTP. Only one destination needs to match. If only specifying one destination it must be specified in SSJMDEST.

SSJMSJBN
Apply job name filter in SSJMJOBN or SSJMJBNP. Only one job name needs to match. If only specifying one job name it must be specified in SSJMJOBN. SSJMSJBN or SSJMSJBI cannot be specified with SSJMSJIL.

SSJMSJBI
Apply job ID filters in SSJMJBIL and SSJMJBIH. SSJMSJBI cannot be specified with SSJMSCTK, SSJMSJIL, SSJMSJBI or SSJMSCOR.

SSJMSOJI
Apply original job ID filter in SSJMOJBI.

SSJMSOWN
Apply current owner filter in SSJMOWNR.

SSJMSSEC
Apply current SECLABEL filter in SSJMSECL.

SSJMSEL2
Flag byte which describes the type of jobs for which data is requested.

Bit Name
Description

SSJMSSTC
Started tasks are selected.

SSJMSTSU
Time sharing users are selected.

SSJMSJOB
Batch jobs are selected.

SSJMSAPC
APPC initiators are selected. Because APPC initiators are also started tasks they are also returned if SSJMSSTC is specified. Use only SSJMSAPC to select only APPC initiators.

SSJMSEL3
Flag byte which describes the filters to use to select jobs. Each bit either corresponds to a filter field which must match any job returned or is a criteria for selecting jobs to return.

Bit Name
Description

SSJMSPRI
Apply JES job priority filter in SSJMPRIO.

SSJMSVOL
Apply SPOOL volume filters in SSJMVOL.

SSJMSPHZ
Use SSJMPHAZ and SSJMPHZP as filters (match any one phase).

SSJMSHLD
Select jobs that are currently held. Setting both SSJMSHLD and SSJMSNHL on is the same as setting both bits off.

SSJMSNHL
Select jobs that are not currently held. Setting both SSJMSNHL and SSJMSHLD on is the same as setting both bits off.

SSJMSSYS
Only jobs active on the system listed in SSJMSYS are returned.

SSJMSMEM
Only jobs active on the JES member listed in SSJMMEMB are returned.

SSJMSEL4
Flag byte which describes the filters to use to select jobs. Each bit corresponds to a filter field which must match any job returned.

Bit Name
Description

SSJMSORG
Apply origin node filter in SSJMORGN.

SSJMSXEQ
Apply execution node filter in SSJMXEQN.

SSJMSSRV
Apply WLM service class filter in SSJMSRVC. When filtering by service class and not filtering by job number (SSJMSJBI) nor job phase (SSJMSPHZ), only jobs on the service class queue specified in SSJMSRVC are returned. When filtering on job number or job phase, any job assigned the service class specified in SSJMSRVC is returned (even if the job is not in a WLM-managed job class). Service classes are only available if the job has completed conversion processing and has not completed execution processing.

SSJMSSEN
Apply scheduling environment filter in SSJMSENV.

SSJMSCLX
Apply job class filter in SSJMCLSL and SSJMCLSP only to jobs in SSJM-SELECT or SSJM-ONMAIN phase.

SSJMSOJD
Do not apply job name filter in SSJMJOBN and SSJMJBNP and job id filters in SSJMJBIL and SSJMJBIH to jobs that created OUTPUT with STST1APC on. SSJMSOJD cannot be specified with SSJMSJIL.

SSJMSJIL
Use SSJMJBNP as a list of 8 character JES JOBIDs for which information is to be returned. The complete list is specified using SSJMJBNP. JOBIDs cannot be specified using SSJMJBIL and SSJMJBIH when SSJMSJIL is specified. SSJMSJIL cannot be specified with SSJMSJBN, SSJMSJBI, SSJMSCTK, SSJMSTPI, SSJMSTPN, SSJMSOJD or SSJMSCOR.

SSJMSEL5
Flag byte which describes the filters to use to select jobs. Each bit corresponds to a filter field which must match any job returned.

Bit Name
Description

SSJMSCOR
Use SSJMJCRP as a pointer to a job correlator filter. SSJMSCOR cannot be specified with SSJMSJBI, SSJMSCTK or SSJMSJIL.

SYSOUT Filter Indicator Input Parameters: The following fields specify additional SYSOUT filters used to select jobs to be processed. All output owned by the job will be visited and compared to the filtering criteria. If ANY output matches the filter criteria, the job will be selected.

SSJMSSL1
Flag byte which describes the SYSOUT filters to use to select jobs to modify. Each bit corresponds to a filter field which must match for the job to be selected for modification. Only jobs with SYSOUT that match the specified filters are selected.

Bit Name
Description

SSJMSCTK
Use the SYSOUT token in SSJMCTKN as a filter. SYSOUT tokens

can be obtained from dynamic allocation or field SSJMCTKN from a previous extended status request. SSJMSCTK cannot be specified with SSJMSJBI or SSJMSCOR.

SSJMSSOW
Apply the SYSOUT owner filter in SSJMSCRE.

SSJMSSDS
Apply the SYSOUT destination filter in SSJMSDES. SSJMSDSP also contains additional SYSOUT destination filters. Mutually exclusive with SSJMSSLC or SSJMSSNT.

SSJMSSCL
Apply the SYSOUT class filter in SSJMSCLA. SSJMSCLP also contains additional SYSOUT class filters.

SSJMSSWR
Apply the SYSOUT external writer filter in SSJMSWTR.

SSJMSSHL
Select held SYSOUT.

SJMSSNH
Select non-held SYSOUT.

Note: Setting SSJMSSHL and SSJMSSNH both ON has the same effect as setting them both off.

SSJMSSL2
Flag byte that describes the SYSOUT filters to use to select jobs to modify. Only jobs with SYSOUT that match the specified filters are selected for modification.

SSJMSSFR
Apply the SYSOUT forms name filter in SSJMSFOR.

SSJMSSPR
Apply the SYSOUT PRMODE filter in SSJMSPRM.

SSJMSSSP
Apply the Select SPIN output only filter in SSJMSSSP. SSJMSSSP and SSJMSSNS are mutually exclusive. If SSJMSSSP and SSJMSSNS are both ON or both OFF, then the spin state of the output will not be considered.

SSJMSSNS
Apply the non-SPIN output only filter in SSJMSSNS. SSJMSSSP and SSJMSSNS are mutually exclusive. If SSJMSSSP and SSJMSSNS are both ON or both OFF, then the spin state of the output will not be considered.

SSJMSSIP
Select SYSOUT elements that are routed to an IP address.

SSJMSSNI
Select SYSOUT elements that are not routed to an IP address.

SSJMSSOD
When on with SSJMSSOW, it indicates to match if SYSOUT is destined to SSJMSCRE on the local node.

SSJMSSJD

- If JES2 is running with checkpoint mode z2 in R11 and SSJMSJBN is on, it indicates to match if SYSOUT is destined to SSJMJOBN or SSJMJBNP on the local node (ignored if SSJMSJBN is off).
- If JES2 is running with checkpoint mode z11 in R11 and SSJMSJBN and SSJMSTPN are on, it indicates to match if SYSOUT is destined to SSJMJOBN, SSJMJBNP or transaction job name on the local node (ignored if SSJMSJBN is off).

SSJMSSL3
More SYSOUT selection criteria.

SSJMSSLC
Select SYSOUT that is destined to the local node. If SSJMSSLC and SSJMSSNT are both on or both off, then the destination of the output will not be considered. However, either bit being on is mutually exclusive with SSJMSSDS being set.

SSJMSSNT
Select SYSOUT that is not destined to the local node. If SSJMSSLC and SSJMSSNT are both on or both off, then the destination of the output will not be considered. However, either bit being on is mutually exclusive with SSJMSSDS being set.

SSJMSSNJ
For selection purposes, treat SYSOUT destined to an NJE node as OUTDISP of WRITE regardless of the actual OUTDISP. This has no effect if SSJMSWRT, SSJMSHOL, SSJMSKEP and SSJMSLVE are all on or all off.

SSJMSWRT
Select output that has an OUTDISP of WRITE.

SSJMSHOL
Select output that has an OUTDISP of HOLD.

SSJMSKEP
Select output that has an OUTDISP of KEEP.

SSJMSLVE
Select output that has an OUTDISP of LEAVE.

Note: Setting SSJMSWRT, SSJMSHOL, SSJMSKEP and SSJMSLVE all on has the same effect as setting them all off.

SSJMSSL4
SSJMSSL4 is used to support filtering of jobs based on transaction name, transaction job id, or transaction owner.

SSJMSTPN
Transaction job name filtering. SSJMSTPN cannot be specified with SSJMSJIL. If this bit is on, jobs with SYSOUT associated with a transaction job name that matches SSJMJOBN or SSJMJBNP are selected for modification. The SSJMSTPN bit is ignored if one of the following situations occurs:

- SSJMSJBN is not set.
- SSJMSOJD is not set.
- JES2 is not running with checkpoint mode z11.

SSJMSTPI
Transaction job ID filtering. SSJMSTPI cannot be specified with SSJMSJIL.

- If SSJMSTPI is not set, only jobs with SYSOUT that has a job ID in the range specified by SSJMJBIL and SSJMJBIH are selected.
- If SSJMSTPI is set, jobs with SYSOUT associated with a SYSOUT data set with a transaction job ID are also selected. The job ID is in the range specified by SSJMJBIL and SSJMJBIH.

The SSJMSTPI bit is ignored if one of the following situations occurs:

- SSJMSJBI is not set.
- SSJMSOJD is not set.
- JES2 is not running with checkpoint mode z11.

SSJMSTPU
SYSOUT owner filtering. If this bit is on, jobs with SYSOUT that are associated with a SYSOUT data set whose transaction owner matches SSJMOWNR are returned. The SSJMSTPU bit is ignored if one of the following situations occurs:

- SSJMSOWN is not set.
- JES2 is not running with checkpoint mode z11.

SSJMSSJ1
If SYSOUT is destined to SSJMJOBN or SSJMJBNP on the local node, SSJMSSJ1 indicates to match using the first jobname supplied in SSJMJOBN in the following situations:

- If SSJMSSJ1 is on with SSJMSJBN
- If SSJMSTPN is on with SSJMSJBN

SSJMSSJ1 is ignored if SSJMSJBN is off.

Job Filter Value Input Parameters: The following fields specify job filter values used to select jobs to be processed. These fields are only relevant when the corresponding job filter indicator request bit is set.

Field Description

SSJMJOBN
Job name filter (used if SSJMSJBN is set). The name is 1-8 characters, left justified, and padded on the right with blanks. The generic characters '*' and '?' are allowed.

SSJMJBIL
Low job ID value (used if SSJMSJBI is set). The job ID is left justified and padded on the right with blanks. When SSJMJBIL is 2-8 characters and starts with one of the prefixes 'I', 'IN', 'INT', 'J', 'JO', 'JOB', 'T', 'TS', 'TSU', 'S', 'ST', 'STC' or '*', then the suffix is converted to a binary value. Job IDs with a suffix matching the SSJMJBIL suffix are returned. The prefix character '*' is not allowed for verbose requests.

When SSJMJBIL contains 1-8 characters with one or more generic characters '*' and '?', and EBCDIC characters A-Z; 0-9; or national characters @, #, $, then job IDs, as returned in STTRJID, that match a 1-8 character EBCDIC comparison with SSJMJBIL are returned. A single character SSJMJBIL with '*' or '?' is not allowed. SSJMJBIH must be blank. Generics characters '*' or '?' are not allowed for verbose requests.

When SSJMSTPI is set and SSJMJBIL is 2-8 characters starting with the prefix '*', then the suffix is converted to a binary value. Transaction job IDs with a suffix matching the SSJMJBIL suffix are also returned.

When SSJMSTPI is set and SSJMJBIL contains 1-8 EBCDIC characters A-Z; 0-9; national characters @, #, $; or generic characters '*' and '?', then transaction job IDs, as returned in STSAJID, that match a 1-8 character EBCDIC comparison with SSJMJBIL are also returned. A single character SSJMJBIL with '*' or '? is not allowed. When generic characters are used, SSJMJBIH must be blank.

SSJMJBIH

High job ID value (used if SSJMSJBI is set). If this field is not specified, then information is only returned using the filter specified in SSJMJBIL. When SSJMJBIH is 2-8 characters and starts with one of the prefixes 'I', 'IN', 'INT', ’J’, ’JO’, ’JOB’, ’T’, ’TS’, ’TSU’, ’S’, ’ST’, ’STC’, then the suffix is converted to a binary value. Job IDs with a suffix within the range from the SSJMJBIL suffix through the SSJMJBIH suffix are returned. Generics characters '*' or '?' are not allowed.

When SSJMSTPI is set, EBCDIC characters A-Z; 0-9; and national characters @, #, $ are allowed. Job IDs, as returned in STTRJID, and transaction job IDs, as returned in STSAJID, within the 1-8 character EBCDIC range from SSJMJBIL through SSJMJBIH, are returned. Generics characters '*' or '?' are not allowed.

See Table 13. Numeric matches are in normal font, EBCDIC matches are in italicized font.

Table 13. Examples of jobs returned for SSJMJBIL when SSJMJBIH is blank.

SSJMJBIL	**Examples of standard job ID matches**	**Examples of transaction job ID matches if SSJMSTPI is on**
JOB00100	Numeric match(es): JOB00100 or TSU00100, and so on. EBCDIC match(es): not applicable.	Numeric match(es): not applicable. EBCDIC match(es):*JOB00100*
J100	Numeric match(es): JOB00100 or TSU00100, and so on. EBCDIC match(es): not applicable.	Numeric match(es): not applicable. EBCDIC match(es):*J100*.
A100	Numeric match(es): not applicable. EBCDIC match(es): not applicable. Error if SSJMSTPI is not on.	Numeric match(es): not applicable. EBCDIC match(es):*A100*
*0000100	Numeric match(es): JOB00100 or TSU00100, and so on. EBCDIC match(es): no additional matches.	Numeric match(es): JOB00100, A0000100, Z100, ZZZZZ100, and so on. EBCDIC match(es): no additional matches.
*100	Numeric match(es): JOB00100 or INT00100, and so on. EBCDIC match(es): *JOB09100*, *T9999100*, and so on.	Numeric match(es): JOB00100, A0000100, Z100, and so on. EBCDIC match(es): *JOB09100*, *T9999100*, *Z99100*, and so on.
*5555555	Numeric match(es): J5555555 or T5555555, and so on. EBCDIC match(es): no additional matches.	Numeric match(es): J5555555, A5555555, Z5555555, and so on. EBCDIC match(es): *55555555*
*555555	Numeric match(es): JO555555 or ST555555 and so on. EBCDIC match(es), *T9555555*, *J8555555*, and so on.	Numeric match(es):JO555555, ZZ555555, and so on. EBCDIC match(es): *Z5555555*, *55555555*, and so on.

Table 13. Examples of jobs returned for SSJMJBIL when SSJMJBIH is blank. (continued)

SSJMJBIL	Examples of standard job ID matches	Examples of transaction job ID matches if SSJMSTPI is on
J*	Numeric match(es): not applicable. EBCDIC match(es): *JOB00100*, *JO123456*, *J7654321*.	Numeric match(es): not applicable. EBCDIC match(es):*JOB00100*, *JO123456*, *J7654321*, *J9*, *JAMES*, and so on.
?OB00100	Numeric match(es): not applicable. EBCDIC match(es) *JOB00100*.	Numeric match(es): not applicable. EBCDIC match(es):*JOB00100*, *ZOB00100*, and so on.
?0000100	Numeric match(es): not applicable. EBCDIC match(es): not applicable.	Numeric match(es): not applicable. EBCDIC match(es):*A0000100*, *Z0000100*, and so on.
?11	Numeric match(es): not applicable. EBCDIC match(es): not applicable.	Numeric match(es): not applicable. EBCDIC match(es):*A11*, *911*, and so on.
?1?	Numeric match(es): not applicable. EBCDIC match(es): not applicable.	Numeric match(es): not applicable. EBCDIC match(es):*A1A*, *B11*, and so on.
*0001?0	Numeric match(es): not applicable. EBCDIC match(es): not applicable.	Numeric match(es): not applicable. EBCDIC match(es):*A0000110*, *Z00001A0*, *K0001J0*, *KT0001P0*, and so on.
10*	Numeric match(es): not applicable. EBCDIC match(es): not applicable.	Numeric match(es): not applicable. EBCDIC match(es):*10000000*, *10A*, and so on.
ZZ#00100	Numeric match(es): not applicable. EBCDIC match(es): not applicable. Error if SSJMSTPI is not on.	Numeric match(es): not applicable. EBCDIC match(es):*ZZ#00100*

SSJMOJBI
Job ID value originally assigned to the job (used if SSJMSOJI is set). The original job ID can differ from the current job ID if the job was sent using NJE. The job ID is 2-8 characters, left justified, and padded on the right with blanks. The JOBID must start with either the character ‘J’ or ‘JOB’ a is followed by the original job number.

SSJMOWNR
Current user ID that the security product has assigned as owner of the job (used if SSJMSOWN is set). The owner is 1-8 character, left justified, and padded on the right with blanks. The generic characters ‘*’ and ‘?’ are allowed.

SSJMSECL
Current SECLABEL that the security product has assigned to the job (used if SSJMSSEC is set). The SECLABEL is 1-8 character, left justified, and padded on the right with blanks. The generic characters ‘*’ and ‘?’ are allowed.

SSJMORGN
NJE node where the job originated (used if SSJMSORG is set). The origin node is 1-8 character, left justified, and padded on the right with blanks.

SSJMXEQN
NJE node where the job is to, or was, executed (used if SSJMSORG is set). The execution node is 1-8 character, left justified, and padded on the right with blanks.

SSJMCLSL
The job class associated with the job (used if SSJMSCLS is set). The job class is 1-8 character, left justified, and padded on the right with blanks.

SSJMSYS
The name of the MVS system on which the job must be active (used if SSJMSSYS is set). The job can be actively executing or active on a device on that system. The system name is 1-8 character, left justified, and padded on the right with blanks. The generic characters '*' and '?' are allowed.

SSJMMEMB
The name of the JES member on which the job must be active (used if SSJMSMEM is set). The job can be actively executing or active on a device on that member. The member name is 1-8 character, left justified, and padded on the right with blanks. The generic characters '*' and '?' are allowed.

SSJMSRVC
The name of the WLM service class assigned to the job (used if SSJMSSRV is set). Jobs only have service classes assigned to them if they have completed conversion processing and have not completed execution processing. The service class is 0-8 characters, left justified, and padded on the right with blanks.

SSJMSENV
The name of scheduling environment (SCHENV= from the JOB statement) required by a job. (used if SSJMSSEN is set). Jobs only have scheduling environments assigned to them if they have completed conversion processing and have not completed execution processing. The scheduling environment is 0-16 characters, left justified, and padded on the right with blanks. The generic characters '*' and '?' are allowed.

SSJMDEST
Default print or punch destination assigned to the job (used if SSJMSDST is set). The destination 1-18 character, left justified, and padded on the right with blanks. The format of the destination is the same as that allowed on DEST= on the OUTPUT statement.

The user ID portion of the destination can contain the generic characters '*' and '?'. This can match jobs with a default print route code that contains a corresponding user ID routing. However, destinations of the format 'R*', 'RM*', 'RMT*', 'U*', and 'N*' will not match jobs with a default print route code of remote, special local, or NJE.

SSJMVOL
This field contains a list of up to four VOLSERs associated with SPOOL. A job is selected only if it has space on at least one of the specified SPOOL volumes (used if SSJMSVOL is set). The SPOOL VOLSERs are each 1-6 character, left justified, and padded on the right with blanks. Unused entries can be set to blanks or zero.

SSJMPRIO
The 1-byte binary priority associated with the job (used if SSJMSPRI is set). The job's priority must match exactly to be selected.

Valid priorities are 0-15.

SSJMPHAZ
The current job processing phase (used if SSJMSPHZ is set).

The following values are valid for SSJMPHAZ:

Phase Value
Description

SSJM_INPUT
Job is active in input processing.

SSJM_WTCONV
Job is queued for conversion.

SSJM_CONV
Job is actively converting.

SSJM_VOLWT
Job is queued for SETUP (not currently used by JES2 code).

SSJM_SETUP
Job is active in SETUP (not currently used by JES2 code).

SSJM_SELECT
Job is queued for execution.

SSJM_ONMAIN
Job is actively executing.

SSJM_SPIN
JES2 is processing SPIN data sets for the JOB.

SSJM_WTBKDN
Job is queued for output processing.

SSJM_BRKDWN
Job is active in output processing.

SSJM_OUTPT
Job is on the hard copy queue.

SSJM_WTPURG
Job is queued for purge.

SSJM_PURG
Job is currently being purged.

SSJM_RECV
Job is active on an NJE SYSOUT receiver.

SSJM_WTXMIT
Job is queued for execution on another NJE node.

SSJM_XMIT
Job is active on an NJE JOB transmitter.

SSJM_EXEC
Job has not completed execution (combines multiple states in one phase request).

SSJM_POSTEX
Job has completed execution (combines multiple states in one phase request).

SYSOUT Filter Value Input Parameters: The following fields specify SYSOUT filter values used to select jobs to be processed. These fields are only relevant when the corresponding SYSOUT filter indicator request bit is set.

SSJMCTKN
Address of client token for selection (if SSJMSCTK is on).

SSJMSCRE
SYSOUT owner (creator) for selection (if SSJMSSOW is on).

SSJMSCLA
SYSOUT class for selection (if SSJMSSCL is on). The SYSOUT class is 1-8 characters in length. Additional classes pointed to by SSJMSCLP.

SSJMSWTR
SYSOUT writer name for selection (if SSJMSSWR is on).

SSJMSFOR
SYSOUT forms name for selection (if SSJMSSFR is on).

SSJMSPRM
SYSOUT PRMODE for selection (if SSJMSSPR is on).

SSJMSDES
SYSOUT destination for selection (if SSJMSSDS is on). Additional SYSOUT destinations pointed to by SSJMSDSP.

Filter Value List Input Parameters: The following fields specify lists of job and SYSOUT filter values to apply when selecting jobs for modification. These fields are only relevant when their corresponding filter indicator request bit is set.

SSJMCLSN
Count of job classes in the job class list SSJMCLSP. Used for selecting jobs if SSJMSCLS is ON.

SSJMCLSP
Pointer to a list of job classes. Used for selecting jobs if SSJMSCLS is ON.

SSJMJBNN
Count of job names in the job name list SSJMJBNP. Used for selecting jobs if SSJMSJBN is ON.

SSJMJBNP
Pointer to a list of job names. Used for selecting jobs if SSJMSJBN is ON.

SSJMDSTN
Count of job destination names in the job destination list SSJMDSTP. Used for selecting jobs if SSJMSDST is ON.

SSJMDSTP
Pointer to a list of job destination names. Used for selecting jobs if SSJMSDST is ON.

SSJMPHZN
Count of job phases in the job phase list SSJMPHZP. Used for selecting jobs if SSJMSPHZ is ON.

SSJMPHZP
Pointer to a list of job phases. Used for selecting jobs if SSJMSPHZ is ON.

SSJMSCLN
Count of SYSOUT classes in the SYSYOUT class list SSJMSCLP. Used for selecting jobs if SSJMSSCL is ON.

SSJMSCLP
Pointer to a list of SYSOUT classes. Used for selecting jobs if SSJMSSCL is ON.

SSJMSDSN
Count of SYSOUT destinations in the SYSYOUT destination list SSJMSDSP. Used for selecting jobs if SSJMSSDS is ON.

SSJMSDSP
Pointer to a list of SYSOUT destinations. Used for selecting jobs if SSJMSSDS is ON.

SSJMJCRP
Pointer to a job correlator used to select jobs if SSJMSCOR is ON.

Output Register Information

When control returns to the caller, the general purpose registers contain:

Register	**Contents**
0	Used as a work register by the system
1	Address of the SSOB control block
2-13	Same as on entry to call
14	Return address
15	Return code

Return code information

The SSI places one of the following decimal return codes in register 15. Examine the return code to determine if the request was processed.

Return Code (Decimal)
Meaning

SSJMRTOK (0)
The modify job function call has completed. Check the SSOBRETN field for specific function information.

SSJMINVA (4)
The subsystem specified in the SSIBSSNM field does not support the modify job function call.

SSJMLERR (8)
A logic error occurred. See the reason codes that are defined for SSJMRETN.

SSJMINVT (12)
The call is not a supported call type (SSJMTYPE).

Output Parameters

Output parameters for the function routine are:

- SSOBRETN
- SSJMRETN
- IAZSSJM

SSOBRETN Contents: When control returns to the caller and register 15 contains a zero, the extended status function places one of the following decimal values in the SSOBRETN field:

Value (Decimal)
Meaning

SSJMRTOK (0)
Input parameters were valid, check SSJMJOBF for output.

SSJMINVA (4)
The search arguments, though syntactically valid, cannot be used (for example, specifying a volume serial in SSJMVOL that is not being used as a SPOOL volume).

SSJMLERR (8)
Logic error in one of the search arguments. See output parameter SSJMRETN (below) for details as to the exact error.

SSJMINVT (12)
The request type in SSJMTYPE is not valid.

SSJMRETN Contents: When SSOBRETN contains an 8 (SSJMLERR) indicating a logic error, the field SSJMRETN indicates the specific error detected. SSJMRETN will be set to one of the following decimal values:

Value (Decimal)
Meaning

SSJMRDST (4)
Destination in SSJMDEST is not valid.

SSJMRJBL (8)
Low job ID in SSJMJBIL is not valid.

SSJMRJBH (12)
High job ID in SSJMJBIH is not valid.

SSJMRJLM (16)
The high job ID in SSJMJBIH is less than the low job ID in SSJMJBIL.

SSJMRCLS (20)
Job class in SSJMCLSL or SSJMCLSP is not valid.

SSJMRVOL (24)
The volume list in SSJMVOL is null or has characters that are not that are not allowed.

SSJMRJBH (28)
The phase specified in SSJMPHAZ or SSJMPHZP is either not valid or not supported by this subsystem.

SSJMRQUE (32)
Unable to access job queue.

SSJMREYE (36)
The eyecatcher in SSJMEYE is not C'SSJMPL'

SSJMRLEN (40)
The length of the IAZSSJM specified in SSJMLEN is too short.

SSJMRJBN (44)
The job name in SSJMJOBN or SSJMJBNP is not valid.

SSJMROWN (48)
The owning user ID in SSJMOWNR is not valid.

SSJMRSYS (52)
The system name in SSJMSYS is not a valid system name.

SSJMRMEM (56)
The member name in SSJMMEMB is not valid.

SSJMRCST (60)
SSJMSEL2 specifies to select only non-batch jobs and batch job class selection was specified in SSJMSCLS.

SSJMROJB (64)
Original job ID in SSJMOJBI is not valid.

SSJMRSEC (68)
The SECLABEL in SSJMSECL is not valid.

SSJMRORG (72)
The origin node in SSJMORGN is not defined.

SSJMRXEQ (76)
The execution node in SSJMXEQN is not defined.

SSJMRPRI (80)
The priority in SSJMPRIO is not valid for this JES.

SSJMRSVC (84)
The service class in SSJMSRVC is not valid.

SSJMSSEN (88)
The scheduling environment in SSJMSSEN is not valid.

SSJMRSCT (92)
The SYSOUT token pointed to by SSJMCTKN is not valid.

SSJMRSCR (96)
The SYSOUT owner in SSJMSCRE is not valid.

SSJMRSSD (100)
The SYSOUT destination in SSJMSDES or SSJMSDSP is not valid.

SSJMRSSC (104)
The SYSOUT class in SSJMSCLA or SSJMSCLP is not valid.

SSJMRSXW (108)
The SYSOUT external writer in SSJMSWTR is not valid.

SSJMRECJ (112)
SSJMSJBI and SSJMSCTK are mutually exclusive.

SSJMRSFR (124)
SSJMSFOR is not valid.

SSJMRSPR (128)
SSJMSPRM is not valid.

SSJMRSUP (132)
Function or filter not supported.

SSJMRIDS (144)
SSJMRIDS indicates SSJMSSDS is set with either SSJMSSLC or SSJMSSNT.

SSJMRWIL (152)
Same non zero value specified for both SSJM1CHR and SSJMZOMO.

SSJMRJIL (156)
SSJMSJIL is set with either SSJMSJBN, SSJMSJBI, SSJMSCTK, SSJMSTPI, SSJMSTPN, SSJMSOJD or SSJMSCOR.

SSJMRJIP (160)
At least one of the JOBIDs in the list pointed to by SSJMJBNP is not valid.

SSJMRJIZ (164)
SSJMSJIL is set and either SSJMJBNN or SSJMJBNP is zero.

SSJMRJCR (168)
The job correlator pointed to by SSJMJCRP is not valid.

SSJMRJCO (172)
SSJMSCOR is set with SSJMSJBI, SSJMSCTK or SSJMSJIL.

SSJMSBEX (184)
SSOB extension address is missing or zero.

SSJMERBP (188)
Storage pointer is not valid.

SSJMERCA (192)
Invalid parameters on a CANCEL (SSJMCANC) request.

SSJMERRE (196)
Invalid parameters on a RESTART (SSJMRST) request.

SSJMERMD (200)
Invalid parameters on a MODIFY (SSJMJCHR) request.

SSJMSJF8
Pointer to a list of job feedback (SSJF) elements.

SSJMSJFP
31-bit part of SSJMSJF8

SSJMNSJF
Count of the number of job feedback elements (SSJF) returned in the output area.

SSJMOFG1
Output flags associated with the output area returned.

Bit Name
Description

SSJMO1CP
Job selection indicator:

ON Indicates that job selection was performed using a checkpoint version.

OFF Indicates that job selection was performed using the live checkpoint data.

Job feedback elements (SSJF)

For each job that matches specified filter requirements, a feedback element is added to the chain pointed to by SSJMSJF8/SSJMSJFP. Each element is composed of a fixed size job feedback element mapped by the SSJF DSECT.

Feedback Element Prefix: The fields in SSJF describe the selected job and indicate the results of the modify request:

Field Name
Description

SSJFEYE
Eye catcher, set to C'SSJF'.

SSJFNXT8
Address of the next job feedback (SSJF) element (64 bit address).

- **SSJFNEXT**
  31-bit part of SSJFNXT8.

SSJFNAME
Job Name.

SSJFJID
Job Identifier.

SSJFOJID
Original Job Identifier.

SSJFOUID
Owner user ID.

SSJFMEM
Member name.

SSJFSYS
System name.

SSJFJCOR
Job correlator.

SSJFSTAT
Job processing status indicator.

- **SSJF_MOK (0)**
  SYNC request processed successfully or ASYNC request successfully queued for processing.
- **SSJF_MCL (128)**
  Class authorization failed.
- **SSJF_MRD (132)**
  Reroute destination authorization failed.
- **SSJFJLCK (136)**
  Request ignored, job locked
- **SSJFJNTF (140)**
  Request ignored, job not found.
- **SSJFBJID (144)**
  Bad job ID.
- **SSJFFQLO (148)**
  Failed to locate the job.
- **SSJFBJCR (152)**
  Job correlator mismatch.
- **SSJFJNCN (156)**
  Job not cancellable or purgeable.
- **SSJFNPUR (160)**
  Job not cancellable or purgeable due to being protected.
- **SSJFPCON (164)**
  Job not cancellable due to conflicting parameters.
- **SSJFNXEQ (168)**
  Job not routable for execution.

SSJFBADJ (172)
Job class not valid.

SSJFNSVC (176)
Job service class cannot be changed - not set yet.

SSJFBADS EQU 180
Service class not valid.

SSJFPOEX (184)
Request failed - job is post-execution.

SSJFJOBC (188)
Job change request failed.

SSJFISCH (192)
WLM scheduling environment not valid.

SSJFIOFF (196)
Request failed - offload device number non-numeric.

SSJFBAFF (200)
Request failed - invalid job phase to modify SYSAFF.

SSJFBMBR (204)
Request failed - invalid member name to modify SYSAFF.

SSJF0MBR (208)
Request failed - no member affinity left after SYSAFF modification.

SSJFNOBR (212)
Request failed - no BERTs.

SSJFNOEX (216)
Request failed - job not in execution.

SSJFDDIN (220)
Request failed - DDNAME not valid for downlevel member.

SSJFINTE (224)
Request failed - internal error, member number in JQE not valid.

SSJFIPRI (228)
Request failed - invalid priority value.

SSJFNOTE (232)
Job not eligible for start job request.

SSJFSDRN (236)
Job not eligible for start. System draining.

SSJFDUPJ (240)
Job not eligible for start. Duplicate job running.

SSJFSENA (244)
Job not eligible for start. Scheduling environment not available.

SSJFINDE (248)
Job not eligible for start. Independent mode mismatch.

SSJFSPOL (252)
Job not eligible for start. Spool(s) unavailable.

SSJFINTP (256)
Request failed - internal processing error. Field SSJFINTC contains the return code from the service routine.

SSJFEX49 (260)
Job not eligible for start. Exit 49 rejected the job.

SSJFSECL (264)
Job not eligible for start. SECLABEL not available.

SSJFNAFF (268)
Job not eligible for start. No affinity to any active system.

SSJFARMR (272)
Job not eligible for start. ARM restart pending.

SSJFBUSY (276)
Job not eligible for start. Job already executing.

SSJFNBAT (280)
Job not eligible for start. Not a batch job.

SSJFNEXQ (284)
Job not eligible for start. Job not on execution queue.

SSJFNOJ2 (288)
Job not eligible for start. No JES2 matches the job.

SSJFNJ2S (292)
Job not eligible for start. No JES2 can select the job.

SSJFMINL (296)
Job not eligible for start. Minimum z/OS level not available.

SSJFNBBM (300)
Job not executing on broadcast member.

SSJFNBTC (304)
Request failed. Not a batch job.

SSJFNSJB (308)
Request failed. No SJB control block, no journal, or not a batch job.

SSJFINTC
If SSJFSTAT = SSJFINTP, then this is the service routine return code.

SSJFEMSG
Text description of the job processing indicator SSJFSTAT.

SSJFSIZE
Current size of job feedback (SSJF) element.

System Information

Some of the JES property information services return system information that is mapped by the IAZJPLXI macro. This information is composed of the following sections:

DSECT Name
DSECT Description

JPSYSPRF
System Information Prefix Section

JPSYSINF
JES System Information Section. This section contains one or more of the following entries:

JPSYSIFE
System Information Entry

System Information Prefix Section: This section holds the length of all the information reported for the systems.

The fields in the JPSYSPRF section are:

Field Name	Description
JPSYXLNG	Length of all the sections.
JPSYXTYP	Type of this section.
JPSYXMOD	Modifier for this section.

JES System Information Section: This section contains information about JES systems (MAS members for JES2) which were processed to obtain data for an SSI 82 call.

Note: This section reports only those systems (JES2 MAS members) which passed the system or member selection filters.

The fields in the JPSYSINF section are:

Field Name	Description
JPSYLNG	Length of the section, including all system information entries.
JPSYTYPE	Type of this section.
JPSYMOD	Modifier for this section.
JPSYOENT	Offset to the first system information entry.
JPSYNENT	Number of system information entries returned.
JPSYSENT	Size of a system information entry.

System Information Entry: This entry contains information about a JES system (MAS member for JES2) which was processed to obtain data for an SSI 82 call.

The fields in the JPSYSIFE entry are:

Field Name	Description
JPSYSYSN	MVS system name.
JPSYMBRN	JES2 MAS member name.

JPSYSUBS
JES subsystem name.

JPSYCMCL
JES command prefix length.

JPSYCMCH
JES command prefix.

JPSYVERN
Version of JES.

JPSYFLAG
Processing flags.

Bit Value	Description
JPSYFPRC	Data processed for this system.
JPSYFNDT	No data returned for this system because no data was available or no data matched the filters.
JPSYFSUP	No data returned for this system - not supported.
JPSYFINA	No data returned for this system because system is not active or cannot be reached.
JPSYFGLB	Global system in a complex (JES3).
JPSYFPRI	Primary subsystem.
JPSYFPXQ	PXEQ issued on this member (JES2).
JPSYFERR	Error accessing data from the system.

JPSYVERD
Version of the data returned from this system.

JPSYMBNR
JES2 MAS member number.

JPSYJ2PL
JES product level.

JPSYJ2SL
JES service level.

Chapter 4. Setting Up Your Subsystem

This chapter describes planning considerations for setting up and writing your own subsystem. When a directed request is made for a specific subsystem, the SSI searches for the subsystem requested. If the SSI finds that the named subsystem handles the requested function, the SSI passes control to the function routine. When a broadcast request is made, the SSI checks every subsystem to see if the subsystem handles the requested function. This search is done in the same order that the subsystems are defined to MVS, with the exception that the primary job entry subsystem (JES) is first. If the SSI finds that a subsystem handles the requested broadcast function, the SSI passes control to the function routine. This process is repeated for each subsystem that handles the requested function.

When you want to write your own subsystem, you must:
- Provide the routines to support the request for a function. These function routines get control from the SSI. They may actually perform the function or may pass control to other routines that you provide.
- Provide a subsystem address space (if required).
- Let MVS know that the subsystem exists (define the subsystem).
- Provide the information to the SSI that it will need to find your function routines (initialize the subsystem).
- Provide accounting information parameters to your subsystem (if required).

Note: When writing your own subsystem you must also provide any control blocks or resources that the subsystem requires for its own operation, which MVS does not provide.

Function Routines/Function Codes

Based on what you want your subsystem to do, you must supply one or more function routines. The same function routine can handle multiple function codes. You must decide how many separate functions you need and identify each function by a unique function code in the subsystem vector table (SSVT). The **SSVT** identifies:
- The SSI function codes to which the subsystem responds
- The subsystem routines that process the supported functions.

The MVS-defined function codes your subsystem can support are described in Chapter 6, “SSI Function Codes Your Subsystem Can Support,” on page 487. If your subsystem handles installation-defined directed requests, you must identify each function using a function code from 236 to 255. These codes are not broadcast functions. You can also subdivide installation-defined function codes by using subtypes you identify by passing parameters in your SSOB function dependent area.

If you plan to have your subsystem support the MVS-defined function codes, see the specific function code descriptions for requirements on your function routine. The sections that follow describe general considerations for all function routines you write.

© Copyright IBM Corp. 1988, 2013

Environment

On entry to a function routine, the function routine must save registers using standard save area conventions.

The register contents on entry to a function routine are:

Register	Contents
Reg 0	Address of the SSCVT (mapped by the IEFJSCVT macro)
Reg 1	Address of the SSOB control block passed by the requestor. This is explained in "Subsystem Options Block (SSOB)" on page 7.
Reg 13	Standard 18-word save area
Reg 14	Return address
Reg 15	Entry point address

On exit from a function routine, a function routine must restore registers 0-14 to the contents on entry using standard exit linkage.

As you write your function routines, be aware of what state and key the function routine must be in to do its work. Your function routine gets control in the key and state of the requestor. If your routine requires that it be in a different key or state, your routine must handle mode and state switching. However, you must reverse the mode switch before returning control to the SSI because the SSI gets control back in your routine's key and state.

Address mode (AMODE) considerations are handled by the SSI system routines. Other addressability considerations must be handled by the function routine. Any addresses passed to an AMODE 24 function routine (including the save area) must be below 16 megabytes. If the subsystem runs in a separate address space, the function routine must establish cross memory space communication either by SRB scheduling or cross memory instructions. For an explanation of using multiple address spaces, see *z/OS MVS Programming: Extended Addressability Guide*.

The function routine can pass back some information when processing for the request is complete. The information is put in fields in the control blocks that the user passed to the SSI when the request was made. The control blocks (SSOB, SSIB and SSOB function dependent area) are explained more fully in Chapter 2, "Making a Request of a Subsystem," on page 7. The function routine must:

- Set the return code in the SSOBRETN field of the SSOB
- Put information (if required) in the SSOB function dependent area.

See Chapter 8, "Examples — Subsystem Interface Routines," on page 561 for coding examples of function routines.

Recovery and Integrity

When you write a function routine, IBM recommends that you provide recovery in case your function routine fails. Your recovery routine should indicate unsuccessful processing, clean up any resources used, and return control to the SSI. You might also want to disable one or more of your supported function codes. See "Disabling Previously Supported Functions" on page 477 for more information.

Attention: Because there is no serialization used for updating the function codes in the SSVT, other requests for supported functions might be coming in asynchronously. The **SSVT** identifies:

- The SSI function codes to which the subsystem responds
- The subsystem routines that process the supported functions.

Therefore, do not delete a function routine from storage (because a task may be using it) and do not delete the SSVT.

Placement of Function Routines

Your subsystem function routines must be addressable from any address space, as the SSI gives control to the subsystem in the caller's environment. To meet this requirement, the following are the choices for placement of your function routines:

- Place your function routines in one of the data sets from which LPA (PLPA, MLPA, or FLPA) is built. That is, those specified in the LPALSTxx, IEALPAxx, or IEAFIXxx members of SYS1.PARMLIB.
- Place your function routines in one of the data sets specified in the LNKLSTxx member of SYS1.PARMLIB. Note that if SYS1.PARMLIB member IEASYSxx specifies LNKAUTH=APFTAB, this data set must also be defined in IEAAPFxx, or in the APF section of SYS1.PARMLIB member, PROGxx.

The placement of your function routines influences the setting of the load-to-global option that is used when building your SSVT or enabling functions with the IEFSSVT macro. If you decide to place your function routines in LPALSTxx, IEALPAxx, or IEAFIXxx, the load-to-global option has no effect. If you decide to place your function routines in LNKLSTxx, you must specify the load-to-global option. When set, this option causes the system to load the function routines into pageable CSA. A subsystem can choose to place all of its function routines in LPA, or in pageable CSA, or a combination of the two. See "Building the SSVT" on page 475 or "Enabling Your Subsystem for New Functions" on page 476 for more information.

Note: If you request load-to-global, the SSI, running under your task, issues a LOAD macro with the end of memory (EOM) keyword set to YES. Function routines that are loaded this way are deleted from storage if the home address space of the requesting task ends. To protect the system, you must deactivate your subsystem or disable all its function codes if the address space ends. To do this, write a function routine that gets control for broadcast function code 8 (end-of-address space). If the address space that owns the function routine ends, invoke IEFSSVT to disable your subsystem's function codes or invoke IEFSSI to deactivate your subsystem. See "Disabling Previously Supported Functions" on page 477 for information on IEFSSVT and see "Deactivating Your Subsystem" on page 479 for information on IEFSSI.

Do You Need a Subsystem Address Space?

When people think of a subsystem, they often think of JES2 or JES3. They usually do not differentiate between the JES subsystem and the JES address space. The subsystem and the address space, however, are not the same. It is just that the JES subsystem was implemented with a requirement for an address space with the same name as the subsystem.

A subsystem is not required to have its own address space, although many subsystems do have a separate address space. Remember that the subsystem routine is entered in the address space of the caller. Therefore, a major decision you need to make is where you want the subsystem to reside: in common storage or in its own address space.

As mentioned earlier, the code that gets control directly from the SSI must be addressable from any address space. That function routine, however, can pass control to your subsystem code that might reside in a separate address space.

If your subsystem requires minimal space, and your installation is not suffering from present (nor anticipating potential) storage constraints for common storage, you can keep all the routines in common storage. On the other hand, having a separate address space is useful if the subsystem needs its own data areas. You can create a separate address space by having your initialization routine use the ASCRE macro, or by having your subsystem run as a started task. See *z/OS MVS Programming: Authorized Assembler Services Reference ALE-DYN* for information on the ASCRE macro.

Defining Your Subsystem

If you want to use dynamic SSI services, your subsystem must be defined to MVS in one of the following ways:

- IEFSSNxx parmlib member (keyword format) processing during IPL
- IEFSSI macro invocation
- SETSSI system command invocation.

The maximum number of subsystems you can define is 32,767.

If you do not want to be able to use dynamic SSI services, your subsystem must be defined to MVS at IPL time in the positional format of the IEFSSNxx parmlib member.

See *z/OS MVS Initialization and Tuning Reference* for detailed information on the syntax and rules for coding IEFSSNxx. See *z/OS MVS Programming: Authorized Assembler Services Reference EDT-IXG* for information on the syntax and rules for coding the IEFSSI macro. See *z/OS MVS System Commands* for information on the syntax and rules for issuing the SETSSI system command.

There are some special things to think about when defining your subsystem, including:

- Naming your subsystem
- Passing parameters
- The primary subsystem

Naming your subsystem

The name you use for your subsystems depends on how your subsystem is defined to MVS. Use one of the following naming conventions:

- If your subsystem is defined to MVS through the IEFSSNxx parmlib member processing at IPL, the subsystem name can be no more than four characters long, beginning with an alphabetic character or #, @ or $. The remaining characters can be alphabetic, numeric, or #, @, or $.

- If your subsystem is defined to MVS through the IEFSSI macro, the subsystem name can be no more than four characters long, containing any character other than blanks or nulls.
- If you subsystem is defined to MVS through the SETSSI command, the subsystem name can contain any character other than blanks or nulls that is valid for system commands. See *z/OS MVS System Commands* for more information on the valid characters.

You cannot use the following names for your subsystems:

- APPC
- ASCH
- MSTR
- OMVS
- STC
- SYS
- TSO

Use a meaningful name for your subsystem to facilitate debugging. Also, check for the subsystem names that are currently in use by IBM-supplied and vendor-supplied products.

Note: Since subsystems can be added after IPL, it is difficult to determine which unique name to use for a subsystem. You can use the query request of the IEFSSI macro to find the names of existing subsystems to ensure that your subsystem name is unique.

Passing parameters

If you want to pass parameters to the initialization routine, you can list them in one of the following:

- IEFSSNxx parmlib member during IPL
- IEFSSI macro
- SETSSI system command.

See “Initializing Your Subsystem” on page 472 for more information.

The primary subsystem

MVS requires that at least one subsystem be defined as a job entry subsystem (JES) to bring jobs into the system. The JES that you select, which can be either JES2 or JES3, is called the primary subsystem. If you do not specify an IEFSSNxx member in SYS1.PARMLIB, MVS attempts to use the system default member, IEFSSN00. IEFSSN00, as supplied by IBM, contains the definition for the default primary job entry subsystem, JES2.

| **Note:** Your JES primary subsystem name must match the procname that is used to
| start JES.

If you attempt to IPL without specifying an IEFSSNxx member and IEFSSN00 is not present or does not identify the primary subsystem, the system issues message IEFJ005I (see “Handling Initialization Errors” on page 555) and prompts the operator for the primary subsystem.

For an IPL, do not define a subsystem more than once in a combination of IEFSSNxx members that can be used together or within a single member. (The same subsystem can appear in two different IEFSSNxx members when the members will not be used together.) In general, if MVS detects a duplicate name, both of the following are true:

- MVS does not define the duplicate subsystem
- MVS does not give control to the initialization routine.

The system issues the following message:

```
IEFJ003I:  DUPLICATE SUBSYSTEM subname NOT INITIALIZED
```

Providing a Routine to Initialize Your Subsystem

When writing your own subsystem you need to provide a routine to initialize your subsystem. You need to decide what your subsystem initialization routine will do and how you will initialize your subsystem.

What Your Subsystem Initialization Routine Can Do

One of the things that you must do to initialize your subsystem is to tell the SSI what function codes and function routines your subsystem supports. This is done by building an SSVT. The SSI provides the IEFSSVT macro to build your subsystem's SSVT. See “Building the SSVT” on page 475 for more information.

After building your subsystem's SSVT, your subsystem initialization routine must let MVS know that your subsystem is active and ready to accept SSI requests.

The following are examples of other things your subsystem initialization routine can do:

- It can tell MVS that your subsystem requires the services of a JES.
- It can define command prefix characters for your subsystem.
- It can create and anchor subsystem specific control blocks for use by its function routines.
- It can specify whether the subsystem is to respond to the SETSSI command.

Prior to z/OS V1R12, the subsystem initialization routines specified in parmlib member IEFSSNxx were invoked in the sequence they appeared and under a task that never terminated. From z/OS V1R12, the initialization routines are invoked in parallel after the BEGINPARALLEL keyword in parmlib member IEFSSNxx is processed, and no longer run under a permanent task when they are run in parallel. Because of this, you should examine your subsystem initialization routines to see if they allocate resources that will be freed at task termination when previously the resources would have remain held. Resources to consider:

- Data spaces created, but not deleted (particularly CADS)
- Task-related storage obtained, but not released
- ENQ obtained, but not DEQ'd
- ALESERV ADD without DELETE
- ESTAE CREATE without DELETE
- Joining XCF groups without leaving
- Connections to Coupling Facility structures obtained, but not released
- Task-level Name/Tokens created without deleting

For more information, see “Initializing Your Subsystem” on page 472.

How to Initialize Your Subsystem

There are two ways to initialize your subsystem:

- Specifying an initialization routine
- Using the START command

You can also combine these methods, doing part of the setup through an initialization routine, then completing initialization through a START command.

Specifying an Initialization Routine

You can optionally specify the name of your subsystem initialization routine when you define your subsystem. See "Defining Your Subsystem" on page 464 for the list of ways that subsystems are defined to MVS. If the functions the subsystem supplies might be needed during the IPL process, define your initialization routine in IEFSSNxx. In this case, the initialization routine handles all the preparation to ensure the subsystem is active.

To take advantage of running subsystem initializations in parallel, the IEFSSNxx parmlib member needs to be updated to include the BEGINPARALLEL keyword.

Note: All initialization routines specified before the BEGINPARALLEL keyword are invoked serially. All initialization routines specified after the BEGINPARALLEL keyword are invoked in parallel.

For IBM products or a vendor-supplied subsystem, check the product's installation or configuration documentation to determine the placement of the BEGINPARALLEL keyword.

Using the START Command

If the subsystem functions are not needed until a later time, you can use the START command to initialize your subsystem. See *z/OS MVS System Commands* and *z/OS MVS JCL Reference* for more information on the START command.

Figure 30 on page 468 shows how you can initialize your subsystem either by specifying an initialization routine or by using the START command.

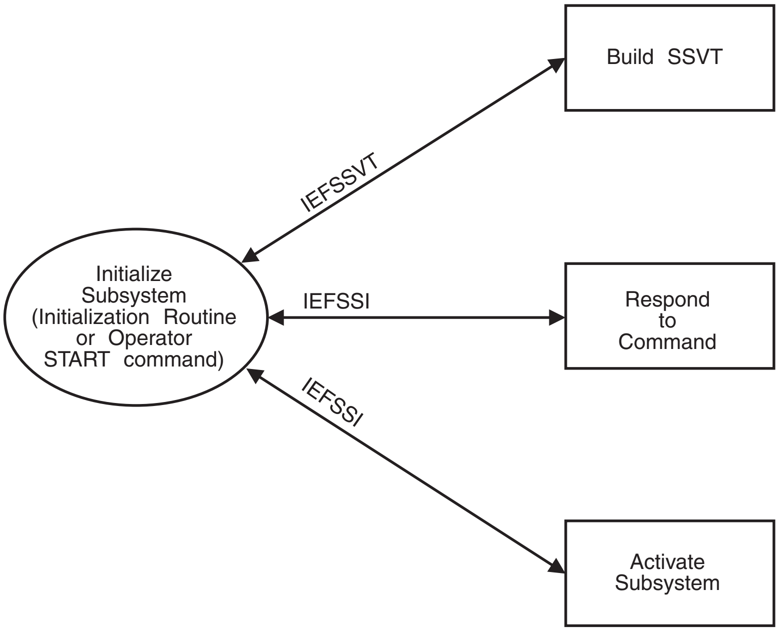
Build SSVT
IEFSSVT
Initialize Subsystem (Initialization Routine or Operator START command)
IEFSSI
Respond to Command
IEFSSI
Activate Subsystem

Figure 30. Initializing Your Subsystem

Starting Your Subsystem With the START Command: You can initialize your subsystem with the START command and run under either a job entry subsystem (JES) or the MSTR subsystem.

See “Subsystem Identification Block (SSIB)” on page 8 for more information on started tasks.

MVS uses one of the following naming conventions to identify the name of the subsystem being started:
- START CAW — MVS interprets CAW as the subsystem name
- START CAW.CAW1 — MVS interprets CAW1 as the subsystem name
- START CAW,JOBNAME=CAW2 — MVS interprets CAW2 as the subsystem name.

In each case, MVS looks for the matching subsystem name that was previously defined to MVS.

If you want to start multiple instances of a specific subsystem using different names, you can, for example, define the following subsystems:
- CAW — the first instance of the CAW subsystem
- CAW1 — the second instance of the CAW subsystem
- CAW2 — the third instance of the CAW subsystem

and then specify the following with the START command:
- START CAW,JOBNAME=CAW
- START CAW,JOBNAME=CAW1
- START CAW,JOBNAME=CAW2

For more information about started tasks, see *z/OS MVS JCL Reference*.

Passing Accounting Parameters to Your Subsystem

SMF allows your subsystem to receive a set of accounting parameters through the use of the SUBPARM option in the SMF parmlib member (SMFPRMxx). Some examples of parameters you can receive are:

- Record type number for SMF records
- Recording interval time
- Level of SMF recording (high, medium, low, or none).

The syntax of the option allows the installation to specify a subsystem name and a set of parameter values (up to 60 characters in length) that are associated with that subsystem.

See *z/OS MVS Initialization and Tuning Reference* for more information on the SMF parmlib member and the SUBPARM option.

Processing the SUBPARM Option

The processing of SUBPARM involves the following:

- Initializing the SMF parameters
- Initializing the subsystem
- Modifying the SUBPARM value.

Initializing the SMF Parameters

During SMF initialization, the SMF parameter that the installation specified are processed and the requested actions are taken. For example, your installation can specify as parmlib options any of the following:

- Perform SMF recording
- Activate specific SMF exits.

SMF parameter initialization includes processing the SUBPARM option. That is, the value the installation specified must be stored in an SMF storage area for the subsystem's use.

Initializing the Subsystem

During subsystem initialization, the subsystem must request the SMF accounting parameter values from SMF. The subsystem uses the SMFSUBP macro to retrieve the parameter value that the installation requested. If the macro request is successful, the system returns a pointer to the specific parameter value. The system returns a non-zero return code if errors are encountered during the macro's processing. See *z/OS MVS System Management Facilities (SMF)* for more information on the SMFSUBP macro.

Modifying the SUBPARM Value

After subsystem initialization is complete, the installation can modify the SUBPARM option value for a specified subsystem by using:

- An SMF console command
- An SMF macro.

Using an SMF Console Command

To change the SUBPARM option value with an SMF console command, use either:

- The SETSMF command
- The SET SMF=xx command.

When either of these commands is issued and causes a change to the value of the SUBPARM option for a selected subsystem, the SMF SUBPARM Option Change call (SSI function code 58) is issued to notify the specified subsystem of the change. See "SMF SUBPARM Option Change Call — SSI Function Code 58" on page 535 for a description of this function code. The SSI function code 58 parameter list does not include the changed parameter value. The subsystem can issue the SMFSUBP macro to retrieve the updated parameter values and modify its processing.

Using an SMF Macro

To change the SUBPARM option value with an SMF macro, the subsystem uses the SMFCHSUB macro. See *z/OS MVS System Management Facilities (SMF)* for more information on the SMFCHSUB macro.

Note: Changes made by the SMFCHSUB macro do not cause SSI function code 58 to be invoked.

Example

The following steps show how an installation can pass accounting parameters to the subsystem.

- The SMF parmlib member used at SMF initialization contains:

  ```
  SUBPARM(ABCD(ONESETOFPARMS))
  ```
- During the initialization of the ABCD subsystem, ABCD issues the SMFSUBP macro to retrieve the initial parameter information.
  - During this point in the processing, the subsystem does whatever it is specified to do by checking the contents in the parameter area.
  - It then continues with its initialization.
- If the installation changes the value of the parameter, either by using the SET SMF=xx command to change parmlib members, or by using the SETSMF command as follows:

  ```
  SUBPARM(ABCD(ANOTHERSETOFPARMS))
  ```

  to change the value for the SUBPARM, the result is that SMF issues the SMF SUBPARM Option Change call (SSI function code 58) to the ABCD subsystem to signal the change.
- Subsystem ABCD could be any of the following:
  - Undefined, which causes an SSI error
  - Not enabled for the function code, which means no action
  - Enabled for the function code, which invokes the subsystem's routine for the function code.
- The function routine uses the SMFSUBP macro to retrieve the updated parameter information.
- At this point in the processing, the subsystem processing depends on the contents of the parameter area, which will probably update controls for the subsystem.

Chapter 5. Services for Building and Using Your Subsystem

This chapter describes MVS services that are provided to help you build and use your subsystems when performing the following tasks:

- Adding your subsystem
- Initializing your subsystem
- Defining what your subsystem can do
- Changing what your subsystem can do
- Activating your subsystem
- Deactivating your subsystem
- Swapping subsystem functions
- Storing and retrieving subsystem-specific information
- Defining subsystem options
- Querying subsystem information
- Maintaining information about your subsystem

Adding Your Subsystem

To dynamically add your subsystem, you can use:

- The keyword format IEFSSNxx parmlib member
- The IEFSSI macro
- The SETSSI command

When you add and define a subsystem, you make the subsystem's name known to the system. Previously, the only way to add a subsystem was to add and define it in the positional format IEFSSNxx parmlib member, which meant that an addition of a new subsystem required you to re-IPL the system.

You can still add a subsystem with the positional format IEFSSNxx parmlib member; however, you cannot use the dynamic SSI services if you add a subsystem this way.

Using the IEFSSNxx Parmlib Member

Both the positional and the keyword format IEFSSNxx parmlib member allow the installation to specify the following information about a subsystem:

- The subsystem name
- The subsystem initialization routine
- The parameters to be passed to the initialization routine
- For the primary subsystem, whether it should be automatically started during master scheduler initialization

Use the keyword format IEFSSNxx parmlib member to dynamically add a subsystem, which allows you to specify the following additional information about a subsystem during subsystem definition processing:

- The console to which messages issued by the SSI will be directed.
- The console to which messages issued by the subsystem initialization routine will be directed.

© Copyright IBM Corp. 1988, 2013

Note: The ability to run in parallel is only in the keyword format of the IEFSSNxx parmlib member.

The installation or subsystem can use the CONSNAME parameter of an IEFSSNxx parmlib entry to specify a console name. The SSI does not verify that the named console is defined or active. If you specify a console name that is not valid, the standard write-to-operator processing occurs. If you do not specify a console name, messages are directed to the master console.

The console name is passed to the subsystem initialization routine in the parameter list mapped by IEFJSIPL. The initialization routine can use the console name when issuing messages.

Specifying a console name is important only during subsystem initialization. After subsystem initialization, SSI messages are issued in response only to dynamic SSI commands; such as, SETSSI and DISPLAY SSI. These messages are issued to the console from which the command was issued, or in the case of the DISPLAY SSI command, to the specified console, if any.

See *z/OS MVS Initialization and Tuning Reference* for the syntax of the keyword format IEFSSNxx parmlib member.

Using the IEFSSI macro

Use the add request of the IEFSSI macro to dynamically add a subsystem and allow you to use dynamic SSI services. As with using the IEFSSNxx parmlib member, the installation or subsystem can use the CONSNAME parameter of the IEFSSI macro to specify a console name.

Using the SETSSI command

Use the SETSSI ADD command to dynamically add a subsystem and allow you to use dynamic SSI services. As with using the IEFSSNxx parmlib member and the add request of the IEFSSI macro, the installation or subsystem can use the CONSNAME keyword of the SETSSI command to specify a console name.

Initializing Your Subsystem

If you are defining your own subsystem, you can code an initialization routine and have control pass to that routine by specifying the name of the initialization routine when you define your subsystem. You can define parameters to be passed to your initialization routine.

The initialization routine is linked to in supervisor state and key zero. On entry to the routine, there are no locks held and register 1 points to a two-word parameter list:

Word	Contents
One	Address of the SSCVT (mapped by the IEFJSCVT macro).
Two	Address of the subsystem initialization parameter list (JSIPL, mapped by IEFJSIPL). See *z/OS MVS Data Areas* in the z/OS Internet library (http://www.ibm.com/systems/z/os/zos/bkserv/) for the format of JSIPL.

Figure 31 shows the input to the initialization routine when your initialization routine gets control from the system.

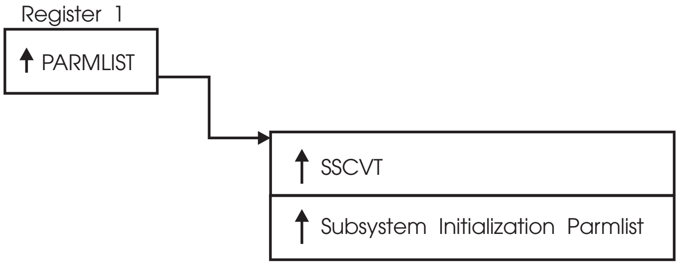

Figure 31. Input to the Initialization Routine

Coding the Initialization Routine

Before coding your initialization routine, consider:

- You can set up a control block structure for your subsystem by building a control block to hold any necessary information and anchoring that control block with the put/get function of the IEFSSI macro. See “Storing Subsystem-specific Information” on page 480 and “Retrieving Subsystem-specific Information” on page 481 for more information on the put/get function of the IEFSSI macro. If, for example, you are planning to use cross memory, your subsystem control block can point to your PC table.
- If you have chosen to have your subsystem run in a separate address space, do not activate the subsystem until the address space is started unless you have made some other provisions for handling requests.
- When you initialize your subsystem with the START command, you must consider whether you want to start your subsystem:
  - Under the job entry subsystem (JES)
  - Under the master subsystem.

  If the operator specifies the SUB=keyword on the START command, the system uses the subsystem that the operator specifies.

  If the operator does not specify the SUB=keyword on the START command, the system defaults to the subsystem that is specified on the REQDSUB parameter of the options function of the IEFSSI macro, or to the MSTR subsystem, if the operator does not specify the REQDSUB parameter of the options function or does not use the options function at all. See “Defining Subsystem Options” on page 481 for more information on the options function of the IEFSSI macro.
- If you have chosen to have your subsystem initializations run in parallel, update the IEFSSNxx parmlib member to include the BEGINPARALLEL keyword. Remember that all initialization routines specified before the BEGINPARALLEL keyword are invoked serially and all routines specified after the BEGINPARALLEL keyword are invoked in parallel. The BEGINPARALLEL keyword must be specified after the SMS entry.
- Your initialization routine determines whether the subsystem can respond to the SETSSI command by using the options function of the IEFSSI macro. See *z/OS MVS System Commands* for more information on the SETSSI command.
- Your initialization routine must be reentrant if it is used by multiple instances of your subsystem, and must reside in a library specified by LNKLST or LPA.
- Your initialization routine must be APF-authorized.

- Your initialization routine is entered in key 0 and supervisor state.
- Your initialization routine can have any addressing mode (AMODE) and any residency mode (RMODE).
- Your initialization routine should issue messages to explain unsuccessful processing using the console information passed in the JSIPL parameter list.
- Your initialization routine should use standard linkage conventions.
- Your initialization routine can define command prefix characters for your subsystem.

  IBM recommends that you use the command prefix facility (CPF) to register your valid command prefix characters. CPF is described in *z/OS MVS Programming: Authorized Assembler Services Guide*.
- The environment your initialization routine runs in depends upon the way your subsystem is defined. If your subsystem is defined by:
  - The keyword format of the IEFSSNxx parmlib member, your initialization routine runs in the master scheduler address space, under a permanent task if you are doing serial processing.
  - The SETSSI command, your initialization routine runs in the master scheduler address space, under a transient task.
  - The IEFSSI macro, your initialization routine runs in the address space and under the task of the issuer of the IEFSSI macro.
- Prior to z/OS V1R12, the subsystem initialization routines specified in parmlib member IEFSSNxx were invoked in the sequence they appeared and under a task that never terminated. From z/OS V1R12, the initialization routines are invoked in parallel after the BEGINPARALLEL keyword in parmlib member IEFSSNxx is processed, and no longer run under a permanent task when they are run in parallel. Because of this, you should examine your subsystem initialization routines to see if they allocate resources that will be freed at task termination when previously the resources would have remain held. Resources to consider:
  - Data spaces created, but not deleted (particularly CADS)
  - Task-related storage obtained, but not released
  - ENQ obtained, but not DEQ'd
  - ALESERV ADD without DELETE
  - ESTAE CREATE without DELETE
  - Joining XCF groups without leaving
  - Connections to Coupling Facility structures obtained, but not released
  - Task-level Name/Tokens created without deleting

“Example 1 — Subsystem Initialization Routine (TSYSINIT)” on page 561 shows a coding example of a sample initialization routine.

Defining What Your Subsystem Can Do

To define what your subsystem can do, you can use the REQUEST=CREATE parameter of the IEFSSVT macro to build an SSVT for your subsystem.

Note: IEFSSVT macro services are available only to dynamic subsystems. However, other subsystems can use the IEFJSVEC service. See Chapter 9, “Using IEFJSVEC with Your Subsystem,” on page 575 for more information on IEFJSVEC.

Building the SSVT

The REQUEST=CREATE parameter of the IEFSSVT macro allows you to build an SSVT for your subsystem. The IEFSSVT macro allows users to specify function routines by address rather than requiring the SSI to load the routines. This is useful if the subsystem wants to load its function routines into global storage, but does not want the routines to be deleted if the address space ends. In this case, the subsystem can perform a load-to-address, rather than a standard load, and pass the addresses to the IEFSSVT macro. See *z/OS MVS Programming: Authorized Assembler Services Reference LLA-SDU* for more information on the LOAD macro.

When preparing to build your subsystem's SSVT, consider:

- When you want to invoke the IEFSSVT macro. You can invoke the IEFSSVT macro either through a subsystem initialization routine or through a subsystem routine invoked during START command processing, as described under "Providing a Routine to Initialize Your Subsystem" on page 466.
- Which common storage subpool your subsystem's SSVT is to be built in. Note that the system uses the mode and key of the caller to access the SSVT and invoke the function routines. Therefore, the storage subpool specified for the SSVT must be a common subpool. See *z/OS MVS Programming: Authorized Assembler Services Guide* for more information on selecting a common storage subpool.
- What are the maximum number of function routines you expect the subsystem to need. The maximum number of function routines you specify applies to the function routines you define on this build request, and also to any function routines that you define when enabling or disabling functions with the IEFSSVT macro.
- What are the actual number of function routines you want to specify on the current request.
- What is the name or address of each function routine and the function code(s) it supports.
- Where the subsystem function routines are to reside. See "Placement of Function Routines" on page 463 for more information.

Inputs

Before invoking the IEFSSVT macro, the subsystem must use the IEFSSVTI macro to create a table that relates function routines and the function codes they support.

The IEFSSVTI macro can do any one of the following:

- Create a static function routine input table
- Reserve dynamic storage for a function routine input table
- Copy a static table to dynamic storage
- Modify a function routine input table in dynamic storage

A static function routine input table is used when all the information required to build the SSVT is known at compile time.

IEFSSVTI does not attempt to verify that its caller is a dynamic subsystem. IEFSSVTI can be used only in conjunction with IEFSSVT.

Outputs: When control returns to the caller of the IEFSSVT macro create request, the OUTTOKEN parameter contains a token that identifies the SSVT that was created. Use this token when activating or deactivating the subsystem with the IEFSSI macro, or when modifying the SSVT with the enable, disable, or exchange request of the IEFSSVT macro.

A subsystem can have a maximum of two SSVTs created with the create request of the IEFSSVT macro. A create request fails if the maximum number of vector tables already exists.

Changing What Your Subsystem Can Do

To change what your subsystem can do, you can use the IEFSSVT macro to:

- Enable your subsystem for new functions - enable request
- Disable a previously supported function - disable request
- Associate a new function routine with a supported function code - exchange request

The caller of either the enable, disable or exchange request can use the INTOKEN parameter of the IEFSSVT macro to specify a token to identify the subsystem vector table that is to be modified. You can get the INTOKEN parameter by issuing the create request of the IEFSSVT macro. If you do not specify a token, the request applies to the active subsystem vector table (the subsystem vector table currently in use). In this case, the request fails if there is not an active subsystem vector table. You can specify the function routines in the subsystem vector table by name or by address.

Another way to change what your subsystem can do is to use the swap request of the IEFSSI macro. See “Swapping Subsystem Functions” on page 480 for more information.

Enabling Your Subsystem for New Functions

You can use the enable request of the IEFSSVT macro to:

- Dynamically add one or more new function routines, and, for each function routine, one or more function codes that the function routine is to support.

  When preparing to enable additional function routines and function codes, consider:

  - When you will be invoking IEFSSVT.
  - What are the actual number of function routines your subsystem currently supports.

    To dynamically add more function routines to your subsystem, the actual number of function routines your subsystem currently supports must be less than the maximum number of function routines that was specified when your subsystem's SSVT was built.
  - What is the name or entry point address of each additional function routine and the function codes it is to support.
  - Where your subsystem function routines are to reside. See Chapter 4, “Setting Up Your Subsystem,” on page 461 for more information on where your function routines can reside.
- Dynamically associate one or more function codes with an existing function routine. This function routine might have been specified on the original build SSVT request or might have been added by a previous enable request.

  When preparing to enable additional function codes, consider:

  - When you will invoke IEFSSVT.

  - Which existing function routines will support which additional function codes.

Note: IEFSSVT macro services are available only to dynamic subsystems. However, other subsystems can use the IEFJSVEC service. See Chapter 9, “Using IEFJSVEC with Your Subsystem,” on page 575 for more information on IEFJSVEC.

Inputs

Before invoking the IEFSSVT macro, the subsystem must use the IEFSSVTI macro to create a table that relates function routines and the function codes they support.

Disabling Previously Supported Functions

You can use the disable request of the IEFSSVT macro to dynamically disable a function code so that your subsystem no longer gets control for that function. Disabling a function is in effect a "logical delete".

Attention: Because there is no serialization on updating the table in the SSVT, other requests for the supported functions might be coming in asynchronously. Therefore, it is important to not remove the function routines from storage.

When preparing to disable one or more function codes, consider:

- When you will be invoking IEFSSVT.
- Which of the existing function codes are no longer supported.

Inputs

Before invoking the IEFSSVT macro, the subsystem must use the IEFSSVTI macro to create a table that relates function routines and the function codes they support.

Unlike the enable request, the disable request does not use the name or address of the function routines in the subsystem vector table when disabling function codes. It uses only the function code itself.

If possible, the SSI reclaims the space in the subsystem vector table occupied by the function routines associated with the disabled function codes. If a function routine does not support any remaining function codes, the SSI makes its subsystem vector table space available for reuse in subsequent enable requests.

Associating a New Function Routine with a Supported Function Code

You can use the exchange request of the IEFSSVT macro to associate the function routine with a supported function code so that the new function routine gets control for that function.

Inputs

Before invoking the IEFSSVT macro, the subsystem must use the IEFSSVTI macro to create a table that relates function routines and the function codes they support.

If possible, the SSI reclaims the space in the subsystem vector table occupied by the function routines associated with the disabled function codes. If a function routine does not support any remaining function codes, the SSI makes its subsystem vector table space available for reuse in subsequent enable requests.

Activating Your Subsystem

To activate your subsystem, you can use:

- The IEFSSVT macro to create an SSVT to define the subsystem's response to the function requests.
- The IEFSSI macro to inform the system that the subsystem is ready to accept function requests.

Using the IEFSSVT macro

Use the create request of the IEFSSVT macro to build the SSVT. See “Building the SSVT” on page 475 for information on building the SSVT.

Using the IEFSSI macro

Use the activate request of the IEFSSI macro to activate your subsystem.

Note: You can use the activate request to activate SSVTs that were built with the create request of the IEFSSVT macro.

The subsystem usually issues the activate request at initialization to activate the subsystem, since the subsystem handles building the vector table. However, the system operator can use also use the SETSSI ACTIVATE command, if the subsystem enabled the SETSSI ACTIVATE command. See *z/OS MVS System Commands* for more information on the SETSSI ACTIVATE command and “Defining Subsystem Options” on page 481 for more information on using the IEFSSI options service to determine the subsystem's response to the SETSSI command.

Inputs

The activate request provides for the specification of an input token that represents the SSVT to be used to activate the subsystem. This is the token returned to the caller of the create request when the SSVT is built.

The SETSSI ACTIVATE command does not accept a corresponding input, because the system operator cannot manipulate vector tables and does not have access to the tokens.

Considerations

When activating your subsystem, consider:

- The activate request fails if a valid SSVT has not been defined for the subsystem. A valid SSVT is one that has been built as described in “Building the SSVT” on page 475.
- A subsystem can have a maximum of two SSVTs defined to the SSI at any time. Only one of the SSVTs can be active or both SSVTs can be inactive (not currently in use to process requests). An activate request fails if the subsystem is already active.

If more than one vector table exists, the SSI determines which vector table it uses to activate the subsystem as follows:

- If activating the subsystem through the IEFSSI macro, the SSI uses the vector table identified by the vector table token specified with the INTOKEN parameter.

- If activating the subsystem through the SETSSI command or if a vector table token is not specified with the IEFSSI macro, the SSI uses the most recently active vector table.
- If none of the vector tables have ever been active, the SSI uses the last vector table created.
- If the SSI does not manage the vector table, the request fails.

Reactivating a Subsystem after Deactivation

Use the activate request or the SETSSI ACTIVATE command to reactivate a deactivated subsystem. A subsystem can be activated, deactivated and reactivated as many times as is necessary.

Deactivating Your Subsystem

To deactivate your subsystem, you can use either:

- The IEFSSI macro
- The SETSSI DEACTIVATE command.

Use the deactivate request of the IEFSSI macro or the SETSSI DEACTIVATE command to deactivate your subsystem so that your subsystem can suspend operations or stop responding to SSI function requests. The SSI stops routing requests, including broadcast requests, to the subsystem when it receives the deactivation request or command. However, there may be outstanding function requests that have not completed. Since it is not possible to determine when the outstanding requests complete, subsystems must not attempt to delete function routines or other resources that might still be in use after either the deactivate request or SETSSI DEACTIVATE command has been issued.

Note: If a job requires the use of paired subsystem function requests, such as, allocate/unallocate or open/close, the job may not end as expected if the subsystem processing these requests is deactivated when the first request of the pair has been processed but the second has not. The SSI cannot determine if this situation exists. It is both the installation's and the subsystem's responsibility to control the job sequence and subsystem deactivation requests to avoid potential problems.

Outputs: The deactivate request returns a vector table token to its caller in the location identified by the optional OUTTOKEN parameter. The token represents the SSVT that has been deactivated. You can use the token in subsequent activate requests, if the same set of functions is supported when it is reactivated. The vector table token is output only. A deactivate request always applies to the active subsystem vector table.

A deactivate request or command is processed only if the target subsystem is dynamic, even if the active vector table is not managed by the SSI. In this case, the output token contains a zero and the request receives the IEFSSI_WARNING (4) return code.

Note: If the subsystem does not have vector tables managed by the SSI, the subsystem cannot be reactivated dynamically.

Swapping Subsystem Functions

A subsystem can maintain two subsystem vector tables. The two tables can describe different sets of functions to which the subsystem responds or identify different function routines to be invoked for the same function codes.

A subsystem would find it useful to maintain two subsystem vector tables if, for example, a subsystem must quiesce operations. This way, a subsystem can keep one full-function vector table and a second limited-function vector table, and swap so that it can continue to support some minimum set of function while shutting down.

The swap request of the IEFSSI macro allows the subsystem to deactivate the active vector table and activate the inactive table in a single operation. The swap request eliminates the need for separate deactivate and activate requests, which would result in a period of time when the subsystem cannot respond to requests.

Inputs

The swap request allows the user to specify a subsystem vector table token on input. The input token, which is named with the INTOKEN parameter, identifies the vector table that is to be activated (with the activate request or command). If INTOKEN is not specified, the inactive (previously created) vector table is activated.

Outputs:

The swap request allows the user to specify a subsystem vector table token on output. On completion of the swap, the output token, which is named with the OUTTOKEN parameter, identifies the outgoing (previously active) vector table.

If the subsystem is initially inactive, the swap request receives the IEFSSI_WARNING (4) return code and is treated as an activate request. The output token identified with the OUTTOKEN parameter contains a zero. If the outgoing (initially active) vector table is not managed by the SSI, the output token contains a zero and the request receives the IEFSSI_WARNING return code.

Storing and Retrieving Subsystem-specific Information

To store and retrieve subsystem-specific information, you can use the IEFSSI macro. A subsystem or a subsystem initialization routine needs to be able to pass information to the subsystem's function routines. If the subsystem code and its function routines are in separate load modules or run in separate address spaces, there may be no direct way for the subsystem to communicate with its function routines. The store and retrieve services provide a way for subsystems to store and retrieve subsystem-specific information and pass that information between subsystem components.

Storing Subsystem-specific Information

Use the put request of the IEFSSI macro to store subsystem-specific information. The put service allows a subsystem to store a total of 8-bytes of subsystem-specific information in two non-contiguous 4-byte fields, which are identified by the SUBDATA1 and SUBDATA2 parameters. The user can store the data in either or both of the two fields on a single invocation of the put service.

A typical use of the put service is to store a pointer to a subsystem-specific control block, which the subsystem initialization routine created and made available for use by the subsystem function routines.

IBM recommends that your subsystem create and anchor control blocks to store subsystem data, even if the stored data is small enough to fit within the two fields provided. This lets your subsystem store more information at a later time. In addition, the information stored using this service does not reside in fetch-protected storage. However, the subsystem can create its control block in a fetch-protected subpool.

Retrieving Subsystem-specific Information

Use the get request of the IEFSSI macro to retrieve subsystem-specific information. The get service allows a subsystem to retrieve subsystem-specific information that was stored using the put request. The retrieved information, which is identified by the SUBDATA1 and SUBDATA2 parameters, is the information that was originally identified by the corresponding put service parameter.

Defining Subsystem Options

To define subsystem options, you can use the IEFSSI macro. The options request allows a subsystem to specify:

- Whether it responds to the SETSSI command
- The subsystem (MSTR or primary) under which the subsystem is to be started.

Use

You can invoke the options request more than once for a single subsystem. The most recent invocation of the service determines the characteristics of the subsystem. The first time the service is invoked, the defaults described in the IEFSSI macro are effective for parameters that are not specified. See *z/OS MVS Programming: Authorized Assembler Services Reference EDT-IXG* for more information on the IEFSSI macro. For subsequent invocations, characteristics corresponding to omitted parameters retain their most recent value. For example, if the first invocation does not specify the COMMAND parameter, the default of COMMAND=NO is used. However, if the first invocation specifies COMMAND=YES and a second invocation does not specify the COMMAND parameter, the subsystem continues to respond to the SETSSI command as specified by the first invocation.

Responding to the SETSSI Command

The system does not process the SETSSI command directed to subsystems that have not explicitly authorized the commands, because existing subsystem were not designed for the possibility of dynamic manipulation by commands. The system may be disrupted if these subsystems are manipulated unexpectedly by commands.

Starting Your Subsystem Under the Primary Subsystem

A subsystem may require the services of the primary subsystem when being started. For example, it may require the primary subsystem to provide the use of subsystem data sets or an internal reader. The options service specifies whether the subsystem being added requires the primary subsystem, and is intended for use in a subsystem initialization routine.

If the START command does not specify the subsystem under which the target subsystem should start, the system uses the information specified with the REQDSUB parameter of the options request.

Querying Subsystem Information

To query subsystem information, an application can use the IEFSSI macro or an operator can use the DISPLAY SSI command. The query request allows either an application or the operator to query the following information for all subsystems defined to the SSI:

- The subsystem name
- If the subsystem is dynamic or not dynamic
- If the subsystem is the primary subsystem
- If the subsystem is active or inactive
- If the subsystem is dynamic, whether it accepts or rejects dynamic SSI commands
- If the subsystem is active, which function codes it supports.

An application can also query the following additional information:

- The number of vector tables associated with the subsystem, with a maximum of two vector tables.
- The following information for each associated vector table:
  - If the vector table is managed by the SSI. A vector table managed by the SSI is a vector table created with the IEFSSVT REQUEST=CREATE macro.
  - A locator. This locator is a token if the vector table is managed by the SSI and is an address if the vector table is not managed by the SSI.
  - If the vector table is active.
  - The function codes supported by the vector table.

This information represents a snapshot of the subsystems defined to the SSI when you process the query request.

To obtain information about the primary subsystem without knowing its name, use the query request and specify a subsystem name of !PRI.

Using the Subsystem Query Request of the IEFSSI Macro

The query request of the IEFSSI macro is the only service provided by this macro that does not require the caller to be authorized.

Inputs

The SSI obtains the storage necessary to return the query request information, because the issuer of the query request cannot determine in advance how much information will be returned. The issuer of the query request can use the WORKASP parameter to specify the subpool in which the SSI can obtain the storage. The query request fails if the SSI is unable to obtain enough storage. Unauthorized callers are limited to unauthorized subpools.

The query request returns information either for a single subsystem or for all subsystems matching the pattern specified with the SUBNAME parameter. The pattern can contain the following wildcard characters:

- An asterisk ('*') — matches zero or more characters

- A question mark ('?') — matches one character.

Outputs: The mapping macro IEFJSQRY maps the output returned by the query request.

If the SSI obtains the storage it needs to use the query request, the SSI returns the address of the output work area in the variable that the WORKAREA parameter identifies. The JQRYLEN field mapped by the IEFJSQRY macro contains the length of the returned storage. Upon completion, the issuer of the IEFJSQRY macro must free the returned storage. You should have established a recovery routine to free the returned storage in case your program ends abnormally. IBM recommends you use task-oriented or job-oriented storage to ensure that the storage is released upon task or job completion.

If you request information about multiple subsystems, the output lists the information in broadcast order. That is, the subsystems are listed in the same order in which SSI broadcast processing invokes them. For each subsystem, the IEFSSI query request returns information about all associated vector tables managed by the SSI, active or not. For vector tables that are not managed by the SSI, the system locates only the active vector table and returns information about that vector table only.

A query request may fail to return information about some subsystems. If a subsystem is defined after IPL by directly manipulating the SSI control blocks and the definition either occurs during the processing of the query request or is not correctly completed, some subsystems may not be represented in the response to the query request.

Using the Display SSI Command

The DISPLAY SSI command displays status information about all subsystems defined to the SSI. You can request information for all subsystems at once or for those subsystems which meet the criteria specified by the filters used when issuing the DISPLAY SSI command. You can use filters to limit the information displayed to:

- One particular subsystem or those subsystems whose names match a specified pattern
- Subsystems that are either dynamic or not dynamic
- Subsystems that are either active or not active
- Subsystems that respond to a given list of function codes.

In addition, the issuer of the command can use the LIST or ALL keywords to specify whether to display subsystem function codes. Subsystem information is displayed in broadcast order.

Maintaining Information About the Callers of Your Subsystem

A common requirement for a subsystem is to maintain information specific to each of its callers. To accomplish this, a subsystem needs both:

- A method of uniquely identifying each caller.
- A work area to store information about each caller (or a place to store the address of a work area).

The subsystem affinity service solves both of these requirements. It allows a subsystem to store and retrieve data at the task control block (TCB) level, thus removing its dependence on information passed by callers.

Consider the following example: A subsystem provides service to many callers, and must also maintain use counts by caller. Each caller can be identified by the TCB that is associated with it.

The subsystem uses the subsystem affinity service to maintain a separate use count for each of its callers. For each caller, the subsystem affinity service provides the subsystem with a unique fullword entry, called a ***subsystem affinity entry***.

Figure 32 shows how the subsystem uses a subsystem affinity entry for a particular caller, to hold a pointer to a work area. The subsystem records use counts in the work area. Because the subsystem affinity service allows each caller to be uniquely identified by the TCB that it runs under, the subsystem can track the use count for each of its callers.

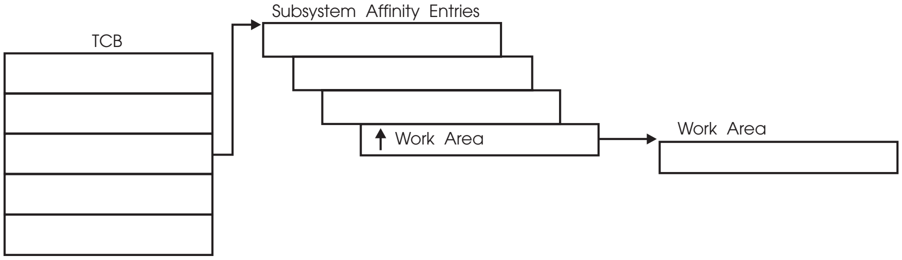

Figure 32. Subsystem Affinity Service

Accessing the Subsystem Affinity Entry: To access the subsystem affinity entry for each of its callers, a subsystem needs to:

- Invoke the verify subsystem function (SSI function code 15) through the IEFSSREQ macro to acquire its ***subsystem affinity index***. See "Verify Subsystem Function Call — SSI Function Code 15" on page 44 for information on SSI function code 15.
- Issue the SSAFF SET request to store data in the entry.

On subsequent invocations, the subsystem can issue the SSAFF OBTAIN request to retrieve the address of a work area from the entry.

SSAFF: Set/Obtain Subsystem Affinity

Use the SSAFF macro to SET or OBTAIN a subsystem affinity entry.

An SSAFF SET request places one fullword of subsystem passed data in the subsystem affinity entry, which is identified by the TCB parameter and the subsystem affinity index. This allows the subsystem to put its entry in the subsystem affinity entry of the current, active TCB.

An SSAFF XMSET request places one fullword of subsystem passed data in the subsystem affinity entry, which is identified by the current TCB and the subsystem affinity index.

An SSAFF OBTAIN request extracts and returns to the subsystem the fullword of data from the subsystem affinity entry identified by the current TCB and the subsystem's index value. The OBTAIN request works only for the subsystem affinity entry pointed to by the current TCB.

Note: A subsystem that uses the TCB subsystem affinity service cannot rely on information stored in a subsystem affinity entry on a checkpoint/restart: the subsystem affinity index value could change from one system initialization to another. For additional information about the restrictions and use of the checkpoint/restart facility, see *z/OS DFSMSdfp Checkpoint/Restart*.

Before you issue the SSAFF macro, register 13 must point to an 18-word save area.

The syntax of the SSAFF macro is:

```
[symbol] SSAFF {SET [,TCB=tcb-address]}
 {XMSET}   {OBTAIN}
,DATA=data-address
,ENTRY=index-value
```

One blank is required before and after “SSAFF”.

SET requests have the following requirements:
- The caller must be enabled, unlocked, and in supervisor state, key 0.
- The caller must not be in cross-memory mode.
- The TCB must be in the caller's home address space and must be either the current TCB or a subtask of the current TCB. If any of these conditions are not satisfied, the calling routine abends.

XMSET requests have the following requirements:
- The caller must be enabled, unlocked, and in supervisor state, key 0.

OBTAIN requests have the following requirements:
- The caller must be in task mode. If this condition is not met, the calling routine abends.
- The caller must have current addressability to the home address space.

The SSAFF macro parameters have the following meanings:

symbol
any valid assembler language symbol.

SET
indicates that MVS is to place the value specified by the DATA parameter into the subsystem's associated subsystem affinity entry. The SET request destroys the contents of registers 14, 15, 0, 1, and 2.

XMSET
indicates that MVS is to place the value specified by the DATA parameter into the subsystem's associated subsystem affinity entry. The XMSET request destroys the contents of registers 14, 15, 0, and 1.

OBTAIN
indicates that MVS is to place the contents of the specified subsystem affinity

entry of the issuing task in the register or data area specified by the DATA parameter. The OBTAIN request destroys the contents of registers 14, 15, 0, and 1.

`,TCB=tcb-address – RX-Type Address, or Register (2)-(12)`
this parameter, valid only for SET requests, specifies the register or storage location that contains the address of the TCB whose subsystem affinity entry MVS is to use when processing the SET request.

Note: If you omit the TCB parameter, MVS uses the current task's TCB. If you allow this default, the calling program must include the IHAPSA mapping macro to identify the current TCB.

`,DATA=data-address – RX-Type Address, or Register (1) or (3)-(12)`
For SET, this parameter specifies the register or fullword storage location that contains the subsystem's data. MVS stores the data in the subsystem affinity entry for a SET request.

For OBTAIN, this parameter specifies the register or fullword storage location that is to contain the value extracted from the subsystem affinity entry.

MVS returns a value of zero if any one of the following is true during an OBTAIN request:

- The subsystem affinity entry associated with the specified index-value contains a zero.
- A null subsystem affinity entry exists for the caller. (A SET request was not performed prior to the OBTAIN request.)
- The specified index value exceeds the size of the caller's subsystem affinity entry.

`,ENTRY=index-value – RX-Type Address, or Register (0) or (3)-(12)`
this parameter specifies the register or fullword storage location that contains the subsystems affinity index value. If you specify an index value greater than the number of subsystems currently defined to MVS, the request fails.

For SSAFF SET requests, the subsystem affinity service uses:

- The TCB address to locate the required subsystem affinity table. When the subsystem does not supply the TCB address, MVS uses the currently-executing TCB (PSATOLD).
- The subsystem affinity index value to locate the specific subsystem affinity entry that is to be set.

For SSAFF XMSET requests, the subsystem affinity service uses:

- The currently executing TCB to locate the required subsystem affinity table.
- The subsystem affinity index value to locate the specific subsystem affinity entry that is to be set.

For SSAFF OBTAIN requests, the subsystem affinity service uses:

- The currently-executing TCB to locate the required subsystem affinity table.
- The subsystem affinity index value to locate the specific subsystem affinity entry to be returned.

Chapter 6. SSI Function Codes Your Subsystem Can Support

This chapter contains detailed information on function codes your subsystem can support. The following is a list of SSI function codes, along with their purpose and the type of subsystem request.

Function Code	Requested Function	Type of Request
4	End-of-task	Broadcast
8	End-of-address space (End-of-memory)	Broadcast
9	WTO/WTOR	Broadcast
10	Command processing	Broadcast
14	Delete operator message	Broadcast
48	Help Call	Broadcast
50	Early notification of end-of-task	Broadcast
54	Request subsystem version information	Directed
58	SMF SUBPARM option change	Directed
78	Tape device selection	Broadcast

Your subsystem can define and use its own function codes, using the range 236 to 255.

SSI Function Code Descriptions

Your subsystem can support several SSI function codes when coding for an MVS/SP-JES2/JES3 environment. This section contains detailed descriptions of the SSI function codes listed at the beginning of this chapter.

See Chapter 8, "Examples — Subsystem Interface Routines," on page 561 for coding examples of function routines.

End-of-Task Call — SSI Function Code 4

The End-of-Task call (SSI function code 4) provides the ability to do task-related resource clean up. Whenever a task ends, all active subsystems that are enabled to receive SSI function code 4 are given control from the SSI after resource managers are given control, including resource managers which were dynamically defined. Each subsystem function routine will get control for every task that ends.

Note: This broadcast request is issued after all dynamic resource managers have been given control, but not all system resource managers. For instance, the following resource managers receive control after this End-of-Task call:

- PC Auth
- RSM

Type of Request

Broadcast SSI call.

Use Information

Your subsystem can use the SSI function code 4 to clean up any resources for a task that is associated with a particular subsystem, and free any resources not normally handled by a resource manager.

© Copyright IBM Corp. 1988, 2013

Because your function routine gets control for every End-of-Task call, using your own subsystem may not be the most efficient way to do your own clean up for ending tasks. IBM recommends that you define your own resource manager through the use of the RESMGR macro. RESMGR can be used to monitor specific ending tasks, rather than having to check each ending task or address space to see if it used the subsystem. For a general description of resource managers and how they can be defined at both IPL time and dynamically, see *z/OS MVS Programming: Authorized Assembler Services Guide*.

Issued to

- All active subsystems that indicate they support the End-of-Task function when the system (MVS) issues the End-of-Task call.

Related SSI Codes

SSI function code 4 is similar to SSI function code 50 (Early End-of-Task call). The only difference is that, for SSI function code 4, your routine is given control after most resource managers are given control. For SSI function code 50, your routine is given control before most resource managers are given control. If you want to obtain control before most resource managers have been invoked, see SSI function code 50 (Early End-of Task).

Related Concepts

None.

Environment

Review "Function Routines/Function Codes" on page 461, which describes both the general environment on entry to your function routine and other programming considerations that your function routine should take into account.

If you decide to set up your subsystem to handle End-of-Task calls, make sure that your function routine is in place before you enable the subsystem to receive SSI function code 4. IBM recommends that you use the IEFSSVT macro to notify MVS that your subsystem should be given control whenever End-of-Task calls are made. IEFSSVT macro services are available only to dynamic subsystems. Subsystems that are not dynamic can still use the IEFJSVEC service; see "Building the SSVT" on page 575 and "Enabling Your Subsystem for New Functions" on page 580 for more information.

The subsystem function routine runs in the address space of the ending task. Because each subsystem function routine is called for every ending task, the subsystem function routine should not be a long running program. That is, the function routine should quickly determine if the subsystem was ever associated with the ending task and, if not, return to the system. Also, do not code a function routine that enters an explicit WAIT or uses a system service that enters a WAIT. Entering a WAIT can cause degraded system performance.

Data areas commonly referenced are mapped by the following mapping macros. IBM recommends you include them in your function routine:

- IEFSSOBH
- IEFJSSIB
- IEFSSET

The function routine receives control in the following environment:

Environment variable	Value
Minimum authorization	Supervisor state with PSW key 0
Dispatchable unit mode	Task
AMODE	24-bit or 31-bit
Cross memory mode	PASN=HASN=SASN
ASC mode	Primary
Interrupt status	Enabled for I/O and external interrupts
Locks	No locks held
Control parameters	The SSIB, SSOB, and SSET control blocks reside in storage below 16 megabytes.
Recovery	The function routine should provide an ESTAE-type recovery environment. See *z/OS MVS Programming: Authorized Assembler Services Guide* for more information on how to set up an ESTAE-type recovery environment.

Figure 33 shows the environment on entry to the function routine for SSI function code 4.

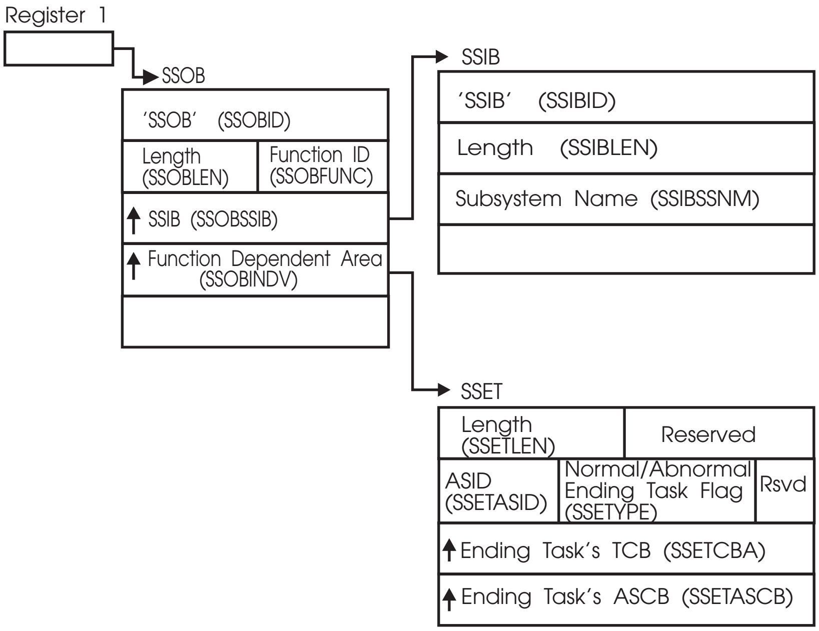
Register 1
SSOB
'SSOB' (SSOBID)
Length (SSOBLEN)
Function ID (SSOBFUNC)
SSIB (SSOBSSIB)
Function Dependent Area (SSOBINDV)
SSIB
'SSIB' (SSIBID)
Length (SSIBLEN)
Subsystem Name (SSIBSSNM)
SSET
Length (SSETLEN)
Reserved
ASID (SSETASID)
Normal/Abnormal Ending Task Flag (SSETYPE)
Rsvd
Ending Task's TCB (SSETCBA)
Ending Task's ASCB (SSETASCB)

Figure 33. Environment on Entry to the Function Routine for SSI Function Code 4

Input Register Information

On entry to the function routine the general purpose registers contain:

Register	Contents
0	Address of the subsystem's SSCVT
1	Address of the SSOB control block
13	Address of a standard 18-word save area
14	Return address
15	Entry point address

Input Parameters

Input parameters for the function routine are:

- SSOB
- SSIB
- SSET

SSOB Contents: MVS sets the following fields in the SSOB control block on input:

Field Name
Description

SSOBID
Identifier 'SSOB'

SSOBLEN
Length of the SSOB (SSOBHSIZ) control block

SSOBFUNC
SSI function code 4 (SSOBEOT)

SSOBSSIB
Address of the SSIB control block

SSOBRETN
Return code from previous subsystem function routine or zero.

Because broadcast requests are routed to all active subsystems, the SSOBRETN field contains the return code value set by some previously invoked subsystem or zero. See “Output Register Information” on page 491 for a list of possible SSOBRETN return codes.

SSOBINDV
Address of the function dependent area (SSET control block)

SSIB Contents: MVS sets the following fields in the SSIB control block on input:

Field Name
Description

SSIBID
Identifier 'SSIB'

SSIBLEN
Length of the SSIB (SSIBSIZE) control block

SSIBSSNM
Subsystem name — name of the subsystem enabled to receive this function code.

SSET Contents: MVS sets the following fields in the SSET control block on input:

Field Name
Description

SSETLEN
Length of the SSET (SSETSIZE) control block

SSETASID
ASID of the address space in which the task was active

SSETFLAG
Flag indicators

- **SSETYPE ON** — indicates an abnormal ending task

- **SSETYPE OFF —** indicates a normal ending task

SSETCBA
Address of ending task's TCB

SSETASCB
Address of ending task's ASCB

Output Register Information

Upon exit from the function routine, the general purpose registers must contain:

Register	Contents
0-12	Restored to contents on entry
14	Return address
15	Return code

Return Code Information

For MVS to process broadcast functions properly, you must use the following return code conventions for function routines that handle broadcast calls. When a routine returns control to the SSI:

- Set register 15 to 0.
- Set the SSOBRETN field in the SSOB control block to one of the following:

Return Code (Decimal)	Meaning
0	The function routine recognized the request but did not process it.
4	The function routine recognized the request and processed it.

End-of-Address Space (End-of-Memory) Call — SSI Function Code 8

The End-of-Address Space Function (End of Memory) call (SSI function code 8) provides the ability to free up any system-level resources, such as CSA, obtained by a subsystem on behalf of an address space. Whenever an address space ends, all active subsystems that are enabled to receive SSI function code 8 are given control from the SSI. The function routine gets control for every address space that ends.

Type of Request

Broadcast SSI call.

Use Information

Your subsystem can use SSI function code 8 to clean up any system-level resources which your subsystem obtained for one or more address spaces. Because private storage for the address space has already been deleted, your function routine must not reference any storage in the ending address space.

Because your function routine gets control for every address space that ends, using your own subsystem may not be the most efficient way to do your own clean up for ending address spaces. IBM recommends that you define your own resource manager through the use of the RESMGR macro. You can use RESMGR to receive control for specific ending address spaces, rather than having to check each ending task or address space to see if it used the subsystem. For a general description of resource managers and how they can be defined at both IPL time and dynamically, see *z/OS MVS Programming: Authorized Assembler Services Guide*.

Issued to

- All active subsystems that indicate they support the End-of-Address space function when the system (MVS) issues the End-of-Address space call.

Related SSI Codes

None.

Related Concepts

None.

Environment

Review “Function Routines/Function Codes” on page 461, which describes both the general environment on entry to your function routine and other programming considerations that your function routine can take into account.

If you decide to set up your subsystem to handle End-of-Address space calls, make sure that your function routine is in place before you enable the subsystem to receive SSI function code 8. IBM recommends that you use the IEFSSVT macro to notify MVS that your subsystem should be given control whenever End-of-Address space calls are made. IEFSSVT macro services are available only to dynamic subsystems. Subsystems that are not dynamic can still use the IEFJSVEC service; see “Building the SSVT” on page 575 and “Enabling Your Subsystem for New Functions” on page 580 for more information.

The subsystem function routine runs in the master scheduler address space. Because each subsystem function routine is called for every ending address space, the subsystem function routine should not be a long running program. That is, the function routine should quickly determine if the subsystem was ever associated with the ending address space and, if not, return to the system. Also, do not code a function routine that enters an explicit WAIT or uses a system service that enters a WAIT. Entering a WAIT can cause degraded system performance.

Data areas commonly referenced are mapped by the following mapping macros. IBM recommends you include them in your function routine:

- IEFSSOBH
- IEFJSSIB
- IEFSSEN

The subsystem function routine receives control in the following environment:

Environment variable	Value
Minimum authorization	Supervisor state with PSW key 0
Dispatchable unit mode	Task
AMODE	24-bit or 31-bit
Cross memory mode	PASN=HASN=SASN
ASC mode	Primary
Interrupt status	Enabled for I/O and external interrupts
Locks	No locks held
Control parameters	The SSOB, SSIB, and SSEN control blocks reside in storage below 16 megabytes.

Environment variable	**Value**
Recovery	The function routine should provide an ESTAE-type recovery environment. See *z/OS MVS Programming: Authorized Assembler Services Guide* for more information on an ESTAE-type recovery environment.

Figure 34 shows the environment on entry to the function routine for SSI function code 8.

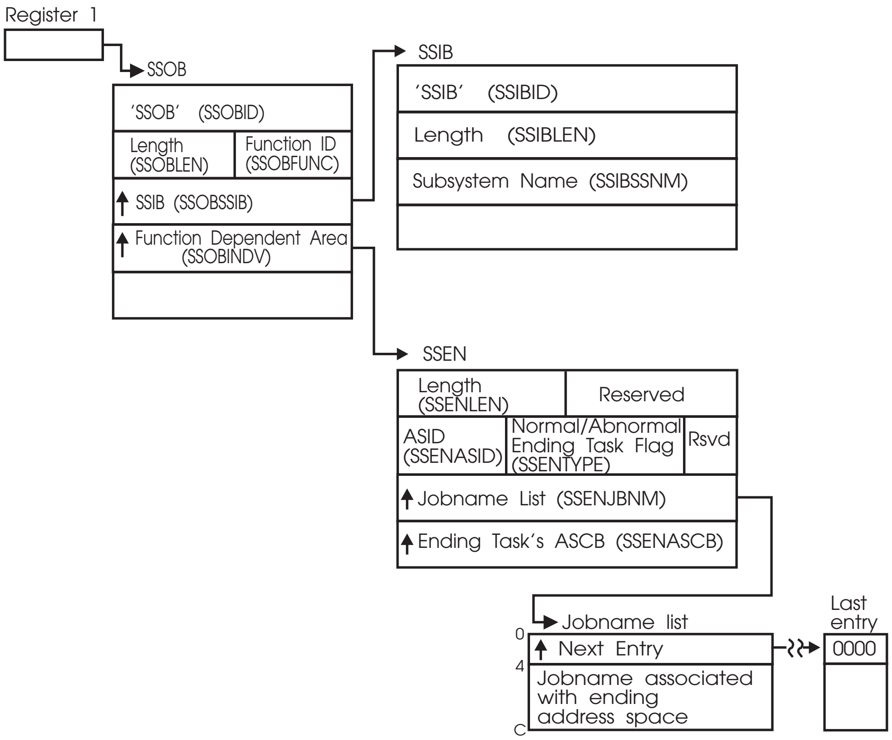
Register 1
SSOB
'SSOB' (SSOBID)
Length (SSOBLEN)
Function ID (SSOBFUNC)
SSIB (SSOBSSIB)
Function Dependent Area (SSOBINDV)
SSIB
'SSIB' (SSIBID)
Length (SSIBLEN)
Subsystem Name (SSIBSSNM)
SSEN
Length (SSENLEN)
Reserved
ASID (SSENASID)
Normal/Abnormal Ending Task Flag (SSENTYPE)
Rsvd
Jobname List (SSENJBNM)
Ending Task's ASCB (SSENASCB)
Jobname list
0
4
C
Next Entry
Jobname associated with ending address space
Last entry
0000

Figure 34. Environment on Entry to the Function Routine for SSI Function Code 8

Input Register Information

On entry to the function routine the general purpose registers contain:

Register	**Contents**
0	Address of the subsystem's SSCVT
1	Address of the SSOB control block
13	Address of a standard 18-word save area
14	Return address
15	Entry point address

Input Parameters

Input parameters for the function routine are:

- SSOB

- SSIB
- SSEN

SSOB Contents: MVS sets the following fields in the SSOB control block on input:

Field Name	Description
SSOBID	Identifier 'SSOB'
SSOBLEN	Length of SSOB (SSOBHSIZ) control block
SSOBFUNC	SSI function code 8 (SSOBEOM)
SSOBSSIB	Address of SSIB control block
SSOBINDV	Address of function dependent area (SSET control block)

SSIB Contents: MVS sets the following fields in the SSIB control block on input:

Field Name	Description
SSIBID	Identifier 'SSIB'
SSIBLEN	Length of SSIB (SSIBSIZE) control block
SSIBSSNM	Subsystem name — name of subsystem that is enabled to receive this function code.

SSEN Contents: MVS sets the following fields in the SSEN control block on input:

Field Name	Description
SSENLEN	Length of SSEN (SSENSIZE) control block
SSENASID	ASID of ending address space
SSENFLAG	Flag indicators • **SSENTYPE ON** — indicates an abnormal ending address space • **SSENTYPE OFF** — indicates a normal ending address space
SSENJBNM	Job name list pointer. For both normal and abnormal endings, contains the list of job names that represents work associated with the address space that is ending. Each entry in the list consists of 12 bytes (first 4 bytes contains pointer to next job name block or zero if last; remaining 8 bytes contains the job name).
SSENASCB	Address of ending address space's ASCB

Output Register Information

Upon exit from the function routine, the general purpose registers must contain:

Register	**Contents**
0-12	Restored to contents on entry
14	Return address
15	Return code

Return Code Information

For MVS to process broadcast functions properly, you must use the following return code conventions for function routines that handle broadcast calls. When a routine returns control to the SSI:

- Set register 15 to 0.
- Set the SSOBRETN field in the SSOB control block to one of the following:

Return Code (Decimal)	**Meaning**
0	The function routine recognized the request but did not process it.
4	The function routine recognized the request and processed it.

WTO/WTOR Call — SSI Function Code 9

All applications running on MVS, MVS subsystems, and MVS itself, generate messages. Each time a message is generated (with a write-to-operator (WTO) or a write-to-operator-with-reply (WTOR) macro), the WTO/WTOR call (SSI function code 9) is issued.

Note that WTOs and WTORs are issued in one of the following forms:

- Single-line message (WTO)
- Multi-line message (WTO) — first line of message
- Multi-line message (WTO) — subsequent lines of message
- Single-line message with reply (WTOR).

Type of Request

Broadcast SSI call.

Use Information

To have your function routine receive control for SSI function code 9, you must use the IEAVG700 interface. You only need to issue IEAVG700 once for each IPL. Use the following coding fragment to call module IEAVG700:

```
⋮
*     Register declarations
R1       EQU  1                 Declaration for register 1
R13      EQU  13                Declaration for register 13
R15      EQU  15                Declaration for register 15

⋮
DOBRDCST EQU  *                 Request broadcast of WTO/WTORs
         LA   R1,SCSRPLST       Get addressability to SCSR
         ST   R1,SCSRPTR        Save pointer for standard linkage
         XC   SCSRPLST(SCSPLEN),SCSRPLST  Zero out parameter list
         MVC  SCSACRO,SCSRACRN  Set acronym value
         MVI  SCSVER,SCSVERSN   Set version level
         OI   SCSFUNC1,SCSBRDON  Indicate to broadcast WTO/WTORs
         LA   R1,SCSRPTR         Set up standard entry linkage
         LA   R13,SAVEAREA       Set up standard save area
         LINK EP=IEAVG700        Call subsystem console routine
         LTR  R15,R15            See if request was successful
         BNZ  BRDFAIL            Branch to process unsuccessful call
* Processing continues here for successful call
⋮
*        Module static storage area
SCSRACRN DC   CL4'SCSR'

⋮
*        Module dynamic storage area
SCSRPTR  DS   A                   Pointer to SCSR
SAVEAREA DS   18F                 Standard save area

⋮
*        Include mapping for Subsystem Console Service Routine
         IEZVG100                 Include SCSR mapping macro
```

The SCSR (subsystem console service routine) parameter list is mapped by mapping macro IEZVG100. Module IEAVG700 must be invoked in key 0, supervisor state, running enabled in task mode with no locks held.

Upon ending, your subsystem should request that broadcasting be discontinued. Use the same type coding fragment as above, except that the **SCSBRDOF** bit (Broadcast off) is set, instead of the **SCSBRDON** bit (Broadcast on).

Your installation might also use the WTO/WTOR call (SSI function code 9) to take any of the following actions against a message:

- Alteration — including text and routing information
- Deletion
- Generation of a reply (in the case of WTOR)
- Suppression.

Your installation can use the following methods to affect WTO/WTOR message processing:

- Message processing facility (MPF) — see *z/OS MVS Planning: Operations*.
- Installation-written exit routines — see *z/OS MVS Installation Exits*.
- Automation — see *z/OS MVS Planning: Operations*.

In choosing which method to use to affect WTO/WTOR message processing, take the following into consideration:

- The WTO general exit (IEAVMXIT) or message processing facility (MPF) exits are the recommended ways to take actions against MVS messages prior to their distribution to consoles and the system log, because they get control before the SSI gets control, and they can be changed easily through the SYS1.PARMLIB member. See *z/OS MVS Installation Exits* for information about IEAVMXIT and MPF exits.
- The primary subsystem (JES) is usually the first subsystem to get control from the SSI.
- Automation subsystems (such as NetView) are common users of SSI function code 9. Automation subsystems also get control from the SSI so that, depending on what you want your program to do, placing your subsystem before or after an automation product may be of concern. For example, subsystems may alter messages. If you are using an automation product that gets its messages from the SSI, it may not receive the final version of a message if there are other

subsystems that subsequently change the message. If so, make sure you code the subsystems in SYS1.PARMLIB member IEFSSNxx in the order in which you want the subsystems to get control.

IBM recommends that you affect message processing with MPF or through one of the automation subsystems.

MCSOPER/MCSOPMSG Macro Services: While SSI function code 9 is useful for an application that needs to trap messages from the MVS message stream, it is no longer the recommended interface for that purpose. The MCSOPER/MCSOPMSG macro services (also known as EMCS) are the recommended programming interface for receiving MVS messages. See *z/OS MVS Programming: Authorized Assembler Services Reference LLA-SDU* for further information about these services.

Issued to

- All active subsystems that indicate they support the WTO/WTOR function when the system (MVS) issues the WTO/WTOR call.

Related SSI Codes

None.

Related Concepts

You need to know how to use WTO and WTOR macros and the IEAVG700 interface. You also need to understand the role that routing information (such as routing codes) plays in determining the destinations of a message. See *z/OS MVS Programming: Authorized Assembler Services Reference SET-WTO* for more information.

Environment

Review "Function Routines/Function Codes" on page 461, which describes both the general environment on entry to your function routine and other programming considerations that your function routine should take into account.

If you decide to set up your subsystem to handle WTO/WTOR calls, make sure that your function routine is in place before you enable the subsystem to handle SSI function code 9. IBM recommends that you use the IEFSSVT macro to notify MVS that your subsystem should be given control whenever WTO/WTOR calls are made. IEFSSVT macro services are available only to dynamic subsystems. Subsystems that are not dynamic can still use the IEFJSVEC service; see "Building the SSVT" on page 575 and "Enabling Your Subsystem for New Functions" on page 580 for more information.

WTOs occur frequently on MVS. Function routines should therefore be as efficient as possible. Function routines should never enter a WAIT and should never use system services that have implied WAITs (such as I/O). Entering a WAIT can cause degraded system performance.

Data areas commonly referenced are mapped by the following mapping macros. IBM recommends you include them in your function routine:

- IEFSSOBH
- IEFJSSIB
- IEFSSWT
- IHAWQE
- IHAORE

The write-to-operator WTO queue element (WQE), mapped by IHAWQE, represents a message.

The operator reply element (ORE), mapped by IHAORE, represents a WTOR.

The function routine receives control in the following environment:

Environment variable	**Value**
Minimum authorization	Supervisor state with PSW key 0
Dispatchable unit mode	Task
AMODE	24-bit or 31-bit
Cross memory mode	PASN=HASN=SASN
ASC mode	Primary
Interrupt status	Enabled for I/O and external interrupts
Locks	No locks held
Control parameters	The SSOB, SSIB, SSWT, and WQE control blocks reside in storage below 16 megabytes. The ORE control block resides above 16 megabytes.
Recovery	The function routine should provide an ESTAE-type recovery environment. See *z/OS MVS Programming: Authorized Assembler Services Reference EDT-IXG* for more information on these macros. Failure to establish a recovery environment causes the current message to be deleted from the system, if the function routine ends abnormally while processing the message. The function routine's recovery should specify a retry point (address) and return 4 on the SETRP macro before returning to system. The retry point should be used to complete a normal return to the function routine's caller. When the function routine returns to its caller under these circumstances, it should indicate to the system to take no action against the message by setting both register 15 and the SSOBRETN to zero. See "Input Register Information" for more information about specifying to the system the action that should be taken by your function routine. **Note:** Although the system supports AMODE=24 SSI routines monitoring function code 9, IBM recommends converting these SSI routines to AMODE=31. In a future release, IBM may change the location of the SSOB, SSIB, SSWT, and WQE control blocks to reside in 31-bit storage.

Input Register Information

On entry to the function routine the general purpose registers contain:

Register	**Contents**
0	Address of the SSCVT
1	Address of the SSOB control block
13	Address of a standard 18-word save area
14	Return address
15	Entry point address

Input Parameters

Input parameters for the function routine are:

- SSOB
- SSIB
- SSWT
- WQE
- ORE

SSOB Contents: MVS sets the following fields in the SSOB control block on input:

Field Name	Description
SSOBID	Identifier 'SSOB'
SSOBLEN	Length of the SSOB (SSIBHSIZ) control block
SSOBFUNC	SSI function code 9 (SSOBWTO)
SSOBSSIB	Address of the SSIB control block
SSOBRETN	Return code from previous function routine (when SSI function code 9 is operating in broadcast mode).
SSOBINDV	Address of the function dependent area (SSWT control block)

SSIB Contents: MVS sets the following fields in the SSIB control block on input:

Field Name	Description
SSIBID	Identifier 'SSIB'
SSIBLEN	Length of the SSIB (SSIBSIZE) control block
SSIBSSNM	Subsystem name — name of the subsystem which is enabled to receive this function code.

SSWT Contents: MVS sets the following fields on input when either a single-line WTO, multi-line WTO, or WTOR is being passed on the SSI call.

SSWT Contents for a Single-line WTO: MVS sets the following fields in the SSWT control block on input for a single-line WTO:

Field Name	Description
SSWTLEN	Length of the SSWT (SSWTSIZE) control block
SSWTWQE	Address of the WQE control block

SSWTNMOD
Value of SUBSMOD keyword on the WTO macro

SSWTPRSP
Indicates whether the SSWTPRTY field is valid

Note: Because messages are no longer assigned priorities, this field is ignored. It remains present for compatibility purposes only.

SSWTPRTY
Value of the PRTY keyword on the WTO macro

Note: Because messages are no longer assigned priorities, this field is ignored. It remains present for compatibility purposes only.

SSWTSNSP
Indicates whether the JOBNAME keyword was specified on the WTO

SSWTSISP
Indicates whether the JOBID keyword was specified on the WTO

Figure 35 shows the environment for a single-line WTO in the SSWT control block.

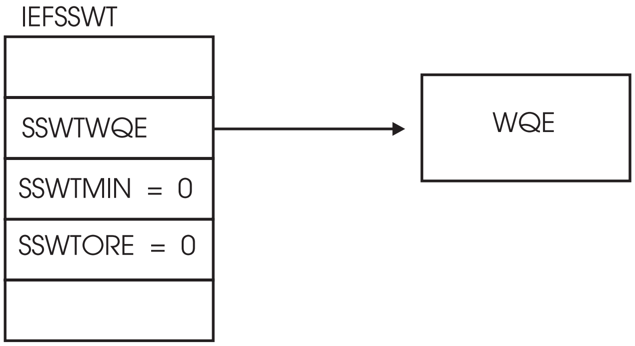

Figure 35. Environment for a Single-line WTO in the SSWT Control Block

WQE Contents for a Single-line WTO: MVS sets the following fields in the WQE control block on input for a single-line WTO:

Field Name
Description

WQETXTLN
Length of the message text

WQETS
EBCDIC time stamp

WQEJOBNM
Jobname (inserted by the primary subsystem)

WQETXT
Message text

WQEXA
Indicators

- **WQEWTOR —** indicates the message is a WTOR

- **WQEAUTH** — indicates the message is issued by an authorized program.

WQEASID
ASID of the message issuer

WQETCB
TCB address of the message issuer

WQESEQ#
Message DOM id

WQEMCSF1
Indicators

- **WQEMCSA** — indicates the WQEROUT and WQEDESCD fields are valid
- **WQEMCSB** — indicates the WQECNID and WQECNNME fields are valid
- **WQEMCSC** — indicates the message is a command response
- **WQEMCSD** — indicates the WQEMSGTP field is valid
- **WQEMCSE** — indicates the message is reply to WTOR
- **WQEMCSFF** — indicates BRDCAST was specified on the WTO
- **WQEMCSG** — indicates HCONLY was specified on the WTO.

WQEMCSF2
Indicators

- **WQEMCSM** — indicates the message is a hardcopy image of the operator command
- **WQEMCSN** — indicates that NOCPY was specified on the WTO.

WQEMSGTP
Message type

WQEROUT
Routing codes

WQEFLG1
Indicators

- **WQERETAN** — indicates that the message is retained by AMRF
- **WQENMOD** — indicates the subsystem cannot modify the message
- **WQEPPNA** — non-action message issued by a non-authorized program
- **WQERISS** — indicates the message is an SVC reissue of a message that has already been processed by SVC. WTO MPF and the SSI have already processed the message. Note that MPF processing occurs only during the original SVC WTO.

WQEDESCD
Descriptor codes

WQEJSTCB
Address of the job step TCB

WQEVRSN
Version level — contains the WQEVRID

WQESYSNM
System name

WQEXMOD
Copy of the MPF/IEAVMXIT user exit request flags. Indicator:

- **WQERDTM —** indicates that an MPF exit has requested the deletion of the message. You can override the requested deletion of the message by setting this bit off.

WQEMLVL
Message level

WQEERC
Extended routing codes

WQELENG
Length of WQE — contains the WQESIZE

WQEKEY
Value of the KEY keyword on the WTO

WQETOKN
Value of the TOKEN keyword on the WTO

WQECNID
Console ID

WQEOJBID
Originating job ID

WQEOJBNM
Originating job name

WQEAUTOT
Value of the automation token from MPF

WQEERFS
Extended request flags from the MPF/IEAVMXIT user exit

WQECNNME
Console name

WQECART
Value specified on the CART keyword on the WTO

WQEBENIP
Indicators

- **WQEDOMD —** indicates the message has been deleted by the DOM macro.
- **WQENBEW —** indicates the message created by a branch-entered WTO. Branch-entered WTOs are WTOs that MVS has called for subsequent SVCs. Note that the ASCB/TCB for SSI function code 9 is not the same as the ASCB/TCB of the issuer of the branch-entered WTO.
- **WQENHABD —** indicates the message has been displayed on the IPL or system console. This is a result of issuing a WTO with SYNCH=YES specified.

WQECASEL
Message color

WQEHASEL
Message highlighting

WQEIASEL
Message intensity

WQEMISC
Indicator

- **WQEAUTO** — indicates AUTO(Y) specified in the MPF for this message.

SSWT Contents for the First Line of a Multi-line WTO: MVS sets the following fields in the SSWT control block on input for a multi-line WTO:

See "SSWT Contents for a Single-line WTO" for the fields that MVS sets as they are the same except for the SSWTMIN field which contains the following:

Field Name
Description

SSWTMIN
Address of the minor WQE

Figure 36 shows the environment for the first line of a multi-line WTO in the SSWT control block.

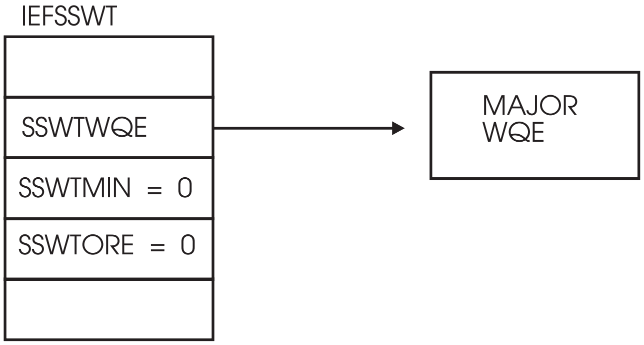

Figure 36. Environment for the First Line of a Multi-line WTO in the SSWT Control Block

WQE (major WQE) Contents for the First Line of a Multi-line WTO: MVS sets the following fields in the WQE control block for the first line of a multi-line WTO:

Field Name
Description

WMJMMLW
Multi-line indicator

- **WMJMMLWB** — indicates the WQE is multi-line

WMJMAREA
Value specified on the WTO AREA keyword

WMJMTXTL
Length of message text

WMJMTS
EBCDIC time stamp

WMJMJBNM
Jobname (inserted by the primary subsystem)

WMJMTXT
Message text

WMJMDSP
Indicator

- **WMJMDSPH —** indicates the message issued by an authorized program

WMJMASID
ASID of the message issuer

WMJMTCB
TCB address of the message issuer

WMJMSEQ#
Message DOM id

WMJMMCS1
Indicators

- **WMJMCS1A —** indicates that the WMJMRTC and WMJMDEC fields are valid
- **WMJMCS1B —** indicates that the WMJMCNID and WMJMCNME fields are valid
- **WMJMCS1C —** indicates the message is a command response
- **WMJMCS1D —** indicates the WMJMMT field is valid
- **WMJMCS1E —** indicates the message is a reply to the WTOR
- **WMJMCS1F —** indicates the BRDCAST keyword is specified on the WTO
- **WMJMCS1G —** indicates the HCONLY is specified on the WTO

WMJMMCS2
Indicators

- **WMJMCS2E —** indicates the message is the hardcopy image of the operator command
- **WMJMCS2F —** indicates the NOCPY is specified on the WTO

WMJMLTY1
Line type indicator

- **WMJMLTYA —**control line
- **WMJMLTYB —** label line
- **WMJMLTYC —** data line
- **WMJMLTYD —** end line

Note: The WMJMLTYC and WMJMLTYD fields can be on at same time.

WMJMRTC
Routing codes

WMJMFLG1
Indicator

- **WMJMRETN —** indicates the message will be retained by AMRF
- **WMJMNMOD —** indicates the subsystem cannot modify the message
- **WMJMPPNA —** indicates the message is issued by the problem program
- **WMJMRISS —** indicates the message is an SVC reissue of a message that has already been processed by SVC WTO. MPF and the SSI have already processed the message. Note that MPF processing occurs only during the original SVC WTO. Examples of using this indicator include

messages that originate on one system (MVS sysplex), but are transported for display to another system (JES3 complex).

WMJMDEC
Descriptor codes

WMJMJTCB
Address of job step TCB

WMJMVRSN
Version level — contains the WQEVRID

WMJMSNM
System name

WMJMXMOD
Copy of the MPF/IEAVMXIT user exit request flags. Indicator:

- **WMJMRDTM —** indicates that an MPF exit has requested the deletion of the message. You can override the requested deletion of the message by setting this bit off.

WMJMMLVL
Message level

WMJMERC
Extended routing codes

WMJMLENG
Length of WQE — contains the WMJMSIZE

WMJMKEY
Value of the KEY keyword on the WTO

WMJMTOKN
Value TOKEN keyword on the WTO

WMJMCNID
Console ID

WMJMOJBI
Originating job ID

WMJMOJBN
Originating job name

WMJAUTOT
Value of the automation token from the MPF

WMJERFS
Extended request flags from the MPF/IEAVMXIT user exit

WMJMCNME
Console name

WMJMCART
Value is specified on the CART keyword on the WTO

WMJBENIP
Indicators

- **WMJMDOMD —** indicates the message has been deleted by the DOM macro.
- **WMJMNBEW —** indicates the message created by the branch-entered WTO. Branch-entered WTOs are WTOs that MVS has called for

subsequent SVCs. Note that the ASCB/TCB for SSI function code 9 is not the same as the ASCB/TCB of the issuer of the branch-entered WTO.
- **WMJMHABD —** indicates the message has been displayed on the IPL or system console. This is a result of issuing a WTO with SYNCH=YES specified.

WMJCASEL
Message color

WMJHASEL
Message highlighting

WMJIASEL
Message intensity

WMJMMISC
Indicator

- **WMJMAUTO —** indicates the AUTO(Y) is specified in MPF for this message

WQE (minor WQE) Contents for Subsequent Lines of a Multi-line WTO: MVS sets the following fields in the WQE on input for subsequent lines of a multi-line WTO:

Field Name
Description

WMNMLT1
Line type indicators

- **WMNMLT1B —** label line
- **WMNMLT1C —** data line
- **WMNMLT1D —** end line

Note: The WMNMLT1C and WMNMLT1D fields can be on at same time.

WMNMLTH1
Length of the minor WQE

WMNMTL1
Length of the minor text

WMNMTXT1
Minor line text

WMN1XMOD
Copy of the request flags from the MPF/IEAVMXIT user exit

Figure 37 on page 507 shows the environment for minor lines of a multi-line WTO in the SSWT control block.

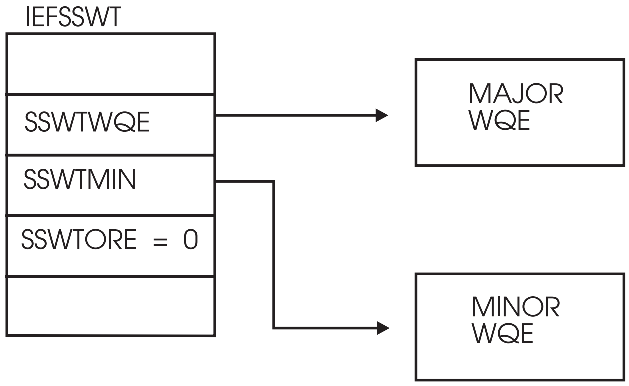

Figure 37. Environment for Minor Lines of a Multi-line WTO in the SSWT Control Block

Multiline use information: The following example illustrates the method in which the system presents a multiline message to the SSI for updating. Consider the six-line message, IEE889I:

```
1 IEE889I 09.38.52 CONSOLE DISPLAY 191
2 MSG: CURR=0    LIM=1500 RPLY:CURR=0    LIM=10   SYS=SCOTT01   PFK=01
3  CONSOLE            ID  --------------- SPECIFICATIONS ---------------
4  SYSLOG                 COND=H      AUTH=CMDS         NBUF=N/A
5                         ROUTCDE=ALL
6 LOG BUFFERS IN USE:        0  LOG BUFFER LIMIT:     1000
```

A multiline message consists of a major WQE (the first line) and minor WQEs (subsequent lines). Minor WQEs are paired when possible. In IEE889I, the two minor WQE pairs are 2 & 3 and 4 & 5. The remaining minor WQE, 6, is not paired. The pairing of minor WQEs affects how the system passes message lines to the SSI, as shown below in Table 14.

The system passes IEE889I to the SSI six times. On the first call, the SSI can modify only 1, the major WQE. On the second call, only 2 (the first line of a minor WQE pair) may be modified; on the third call, only 3 (the second line of a minor WQE pair) may be modified, and so on. The system passes IEE889I to the SSI six times, giving the SSI one opportunity to modify each of the six lines.

Table 14. SSI updating of multi-line messages

On this call...	...the system passes these lines to the SSI...	...and the SSI can modify this line:
1	1	1
2	1 2	2
3	1 2 3	3
4	1 4	4
5	1 4 5	5
6	1 6	6

The SSI assigns fields to point at the lines of a multi-line message. SSWTWQE always points at the major WQE. If minor WQEs are present, then SSWTMIN points at the first minor WQE of the pair. If there is a second line of a minor WQE pair, WMNMNX1 (which is within the first minor WQE) points at it.

SSWT Contents for a WTOR (always single-line): MVS sets the following fields in the SSWT control block on input for a WTOR (always single-line):

See "SSWT Contents for a Single-line WTO" for the fields that MVS sets as they are the same except for the SSWTORE field which contains the following:

Field Name	**Description**
SSWTORE	Address of the ORE control block

WQE Contents for a WTOR (always single-line): The fields in the WQE control block for a WTOR (always single-line) that MVS sets on input contain the same information as the WQE control block for a single-line WTO. See "WQE Contents for a Single-line WTO and WTOR" for this information.

ORE Contents for a WTOR (always single-line): MVS sets the following fields in the ORE control block on input for a WTOR (always single-line):

Field Name	**Description**
ORERPYA	Address of the WTOR issuer's reply buffer
OREECBA	Address of the WTOR issuers ECB
ORECBID	Acronym — 'ORE'
OREVRSN	Version level — OREVRID
ORELNTH	Maximum length of the requested reply (specified by the WTOR issuer)
ORERPIDB	Binary reply ID

Figure 38 on page 509 shows the environment for a WTOR in the SSWT control block.

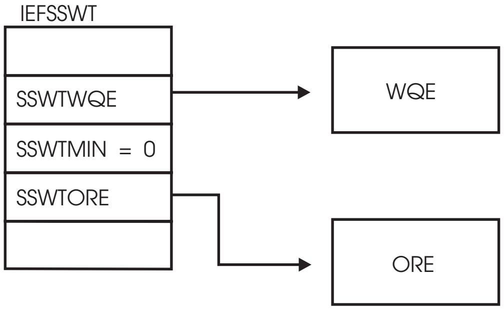

Figure 38. Environment for a WTOR in the SSWT Control Block

Output Register Information

Upon exit from the function routine, the general purpose registers must contain:

Register	**Contents**
0-12	Restored to contents on entry
14	Return address
15	Return code

Return Code Information

For MVS to process broadcast functions properly, you must use the following return code conventions. When a routine returns control to the SSI:

- Set register 15 to 0.
- Set the SSOBRETN field in the SSOB control block to one of the following:

Return Code (Decimal)	**Meaning**
SSWTRTOK (0)	The function routine recognized the request but did not process it.
SSWTNDSP (4)	Do not display message; hardcopy message
SSWTOKNH (8)	Display message; do not hardcopy message
SSWTNDNH (12)	Do not display message; do not hardcopy message

Note: For a multi-line WTO, the SSOBRETN field is only accepted for the first call to the function routine. The SSOBRETN field is ignored on subsequent calls to present the minor lines.

Output Parameters

Output parameters for the function routine are:

- WQE

WQE Contents for a Single-line WTO and WTOR: The contents of the following fields in the WQE control block for a single-line WTO and WTOR on output are:

Field Name
Description

WQETXTLN
New length of the message text (if text was altered)

WQETXT
New/changed message text

WQEMSGTP
New/changed message type. The WQEMCSD field must be set appropriately.

WQEROUT
New/changed routing codes. The WQEMCSA field must be set appropriately.

WQEDESCD
New/changed descriptor codes. The WQEMCSA field must be set appropriately. The WQEROUT field must be non-zero.

WQEERC
New/changed extended routing codes

WQECASEL
New/changed message color

WQEHASEL
New/changed message highlighting

WQEIASEL
New/changed message intensity

WQEFLG1
Indicator

- **WQERETAN —** indicates that the message is retained by AMRF

WQEXMOD
Copy of the MPF/IEAVMXIT user exit request flags. Indicator:

- **WQERDTM —** indicates that an MPF exit has requested the deletion of the message. You can override the requested deletion of the message by setting this bit off.

WQE Contents for a Multi-line WTO (major line): The contents of the following fields in the WQE control block for a multi-line WTO (major line) on output are:

Field Name
Description

WMJMTXTL
New length of the message text (if text was altered)

WMJMTXT
New/changed message text

WMJMXMOD
Copy of the MPF/IEAVMXIT user exit request flags

WMJMMT
New/changed message type. The WMJMCS1D field must be set.

WMJMRTC
New/changed routing codes. The WMJMCS1A field must be set.

WMJMDEC
New/changed descriptor codes. The WMJMCS1A field must be set. The WMJMRTC field must be non-zero.

WMJMERC
New/changed extended routing codes

WMJCASEL
New/changed message color

WMJHASEL
New/changed message highlighting

WMJIASEL
New/changed message intensity

WMJMRDTM
Indicates whether the message is to be deleted

WMJMRETN
Indicates that the message is retained by AMRF

ORE Contents for a WTOR: Any changes to the ORE are ignored.

WQE Contents for a Multi-line WTO (minor line): The contents of the following fields in the WQE control block for a multi-line WTO (minor line) on output are:

Field Name
Description

WMNMTL1
New length of the minor text (if the WMNMTXT1 field is modified)

WMNMTXT1
New/changed minor line text

Command Processing Call — SSI Function Code 10

The Command Processing call (SSI function code 10) is issued every time a system command is generated. SSI function code 10 allows the SSI to find system commands intended for your installation-written subsystem.

Type of Request

Broadcast SSI call.

Use Information

Your installation can use the Command Processing call (SSI function code 10) to:

- Receive a command for processing
- Alter the text of a command (add additional parameters)
- Monitor command traffic
- Prevent commands from being used on the system.

Issued to

- All active subsystems that indicate they support the Command Processing function when the system (MVS) issues the Command Processing call.

Related SSI Codes

None.

Related Concepts

You should know how to use command authorization and routing command responses through a WTO. See *z/OS MVS Planning: Operations* for command authority concepts. See *z/OS MVS Programming: Authorized Assembler Services Reference ALE-DYN* for information on routing command responses to operator consoles using the CONSID keyword.

Environment

Review “Function Routines/Function Codes” on page 461, which describes both the general environment on entry to your function routine and other programming considerations that your function routine should take into account.

If you decide to set up your subsystem to handle command processing calls, make sure that your function routine is in place before you enable the subsystem to handle SSI function code 10. IBM recommends that you use the IEFSSVT macro to notify MVS that your subsystem should be given control whenever Command Processing calls are made. IEFSSVT macro services are available only to dynamic subsystems. Subsystems that are not dynamic can still use the IEFJSVEC service; see “Building the SSVT” on page 575 and “Enabling Your Subsystem for New Functions” on page 580 for more information.

Do not code a function routine that enters an explicit WAIT or uses a system service that enters a WAIT. Entering a wait can cause degraded system performance.

Data areas commonly referenced are mapped by the following mapping macros. IBM recommends you include them in your function routine:

- IEFSSOBH
- IEFJSSIB
- IEFSSCM
- IEZMGCR

The function routine receives control in the following environment:

Environment variable	**Value**
Minimum authorization	Supervisor state with PSW key 0
Dispatchable unit mode	Task
AMODE	24-bit or 31-bit
Cross memory mode	PASN=HASN=SASN
ASC mode	Primary
Interrupt status	Enabled for I/O and external interrupts
Locks	No locks held
Control parameters	The SSOB, SSIB, and SSCM control blocks reside in storage below 16 megabytes.

Environment variable	Value
Recovery	The function routine should provide an ESTAE-type recovery environment. See *z/OS MVS Programming: Authorized Assembler Services Reference EDT-IXG* for more information on these macros. Failure to establish a recovery environment ends the processing of the current operator command if an abend occurs. The function routine's recovery should retry. The retry point should take one of the following actions: • Ignore the command • Indicate to the system the command could not be processed • Indicate to the system the command was processed. The system issues error message IEE707E indicating the command failed. **Note:** Refer to “Output Register Information” on page 516 for instructions on what your function routine should specify to the system.

Figure 39 shows the environment on entry to the function routine for SSI function code 10.

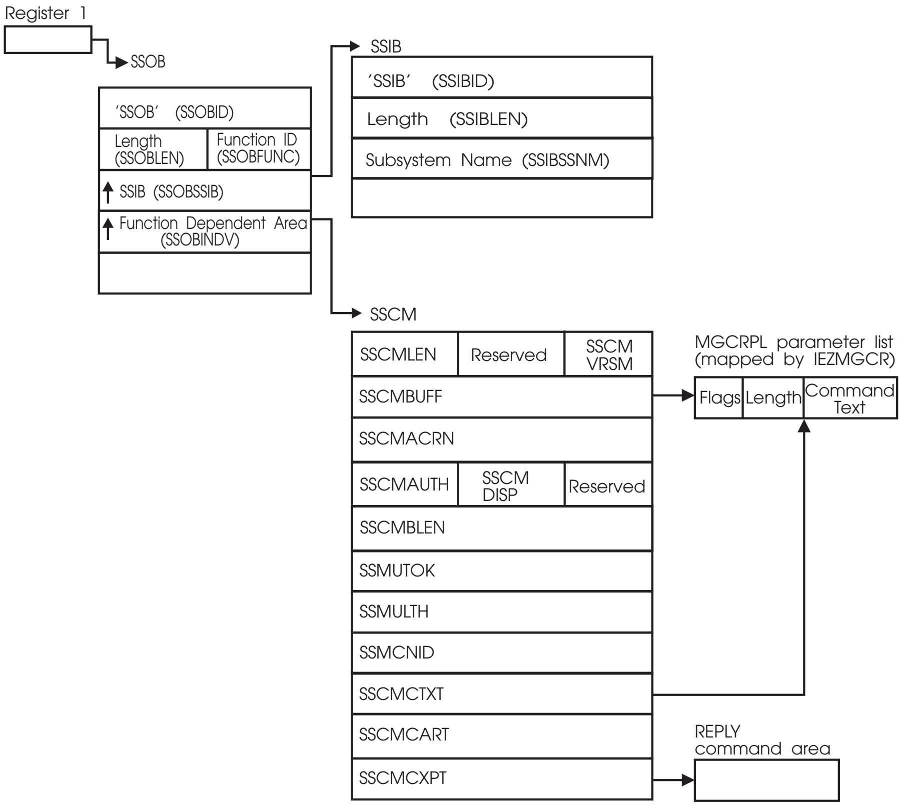
Register 1
SSOB
'SSOB' (SSOBID)
Length (SSOBLEN)
Function ID (SSOBFUNC)
SSIB (SSOBSSIB)
Function Dependent Area (SSOBINDV)
SSIB
'SSIB' (SSIBID)
Length (SSIBLEN)
Subsystem Name (SSIBSSNM)
SSCM
SSCMLEN
Reserved
SSCM VRSM
SSCMBUFF
SSCMACRN
SSCMAUTH
SSCM DISP
Reserved
SSCMBLEN
SSMUTOK
SSMULTH
SSMCNID
SSCMCTXT
SSCMCART
SSCMCXPT
MGCRPL parameter list (mapped by IEZMGCR)
Flags
Length
Command Text
REPLY command area

Figure 39. Environment on Entry to the Function Routine for SSI Function Code 10

Input Register Information

On entry to the function routine the general purpose registers contain:

Register	**Contents**
0	Address of the subsystem's SSCVT
1	Address of the SSOB control block
13	Address of a standard 18-word save area
14	Return address
15	Entry point address

Input Parameters

Input parameters for the function routine are:

- SSOB
- SSIB
- SSCM
- Command Sensitive Area
- MGCRPL

SSOB Contents: MVS sets the following fields in the SSOB control block on input:

Field Name	**Description**
SSOBID	Identifier 'SSOB'
SSOBLEN	Length of the SSOB (SSOBHSIZ) control block
SSOBFUNC	SSI function code 10 (SSOBCMND)
SSOBSSIB	Address of the SSIB control block
SSOBINDV	Address of the function dependent area (SSCM control block)

SSIB Contents: MVS sets the following fields in the SSIB control block on input:

Field Name	**Description**
SSIBID	Identifier 'SSIB'
SSIBLEN	Length of the SSIB (SSIBSIZE) control block
SSIBSSNM	Subsystem name 'MSTR'

SSCM Contents: MVS sets the following fields in the SSCM control block on input:

Field Name

Description

SSCMLEN
Length of the SSCM (SSCMSIZE) control block

SSCMVRSN
Version level of the SSCM (SSCMVRID) control block

SSCMBUFF
Address of the command buffer in the MGCRPL control block

SSCMACRN
Identifier 'SSCM'

SSCMAUTH
Command authority of command issuer — see the SSCM control block information for the definition of flags within this byte.

SSCMDISP
Disposition flags — see the SSCM control block information for the definition of flags within this byte.

SSCMBLEN
Length of the command buffer pointed to by the SSCMBUFF field.

SSCMOLIB
If the command text was changed by symbolic substitution (indicated by an ON value in the SSCMSYMS field), this field contains a DSECT that maps the original command text (the text that existed before symbolic substitution occurred).

SSCMOLIP
If the command text was changed by symbolic substitution (indicated by an ON value in the SSCMSYMS field), this field contains the address of the SSCMOLIB structure.

SSCMSYMS
The command text was changed by symbolic substitution.

SSCMUTOK
Address of the UTOKEN

The UTOKEN identifies the issuer of the command. The RACROUTE macro accepts the UTOKEN to perform command authorization checking using a security product (RACF).

SSCMULTH
Length of the UTOKEN

SSCMCNID
4-byte console ID — identifies the console that the command was issued from.

SSCMSCNM
Console name of the console whose ID is in the SSCMCNID

SSCMCTXT
Address of a 126-byte buffer containing the command text

SSCMCLEN
Length of command text

SSCMCART
Command and response token

To identify the source of the command, all command responses issued by a function routine through a WTO or WTOR should specify either SSCMCNID or SSSCNM and SSCMCART.

SSCMCXPT
Address of command sensitive area or zero

Command Sensitive Area Contents: MVS sets the following fields in the command sensitive area for a REPLY command on input. The address of this area (when present) is available in the SSCMCXPT field. If not present, SSCMCXPT=0.

Field Name	Description
SSCMCVRB	Command identifier — REPLY
SSCMRTCB	TCB address of the WTOR issuer
SSCMRASI	ASID of the WTOR issuer
SSCMRTXT	Offset to the reply text in the area pointed to by either the SSCMCTXT field or SSCMBUFF+4.
SSCMRFLG	Reply flag • **SSCMRSEC —** indicates whether the REPLY is to a security WTOR (route code of 9).

MGCRPL Contents: The address of the MGCRPL control block is available in the SSCMBUFF. MVS sets the following fields in the MGCRPL control block on input:

Field Name	Description
MGCRLGTH	Length of the command text + 4
MGCRFLG2	Command processing flags — see the MGCRPL control block information for a definition of these flags.
MGCRTEXT	Command text

Output Register Information

Upon exit from the function routine, the general purpose registers must contain:

Register	Contents
0-12	Restored to contents on entry
14	Return address
15	Return code

Return Code Information

For MVS to process broadcast functions properly, you must use the following return code conventions for function routines that handle broadcast calls. When a routine returns control to the SSI:

- Set register 15 to 0.
- Set the SSOBRETN field in the SSOB control block to one of the following:

  Return Code (Decimal)
  Meaning

  SSCMSCMD (0)
  The command does not belong to the function routine.

  SSCMSUBC (4)
  The command belongs to the function routine and was processed.

  SSCMIMSG (8)
  The command belongs to the function routine, but could not be processed. Message IEE707I is issued.

Output Parameters

Output parameters for the function routine are:

- MGCRPL

MGCRPL Contents: The address of the MGCRPL control block is available in SSCMBUFF. Your function routine can modify the contents of the following fields in the MGCRPL control block on output:

Field Name
Description

MGCRLGTH
Length of the command text plus 4. A new length can be specified. The new length must be greater than or equal to 5, but cannot exceed 130.

MGCRTEXT
Command text — the command text can be altered and replaced. If the length is changed, MGCRLGTH (above) must also be updated.

Note: A function routine that alters the text of the command for processing by either another subsystem or MVS must specify SSOBRETN=0 upon return to the caller.

Restrictions

Only one subsystem can claim ownership of a command and assume responsibility for its processing by assigning a unique command prefix to the subsystem; any command prefixed by that command prefix is owned by that subsystem.

Note:

1. A command prefix is a character string of one or more alphanumeric and/or national characters. Command prefixes often have a length of one character, although a maximum of eight characters is permitted.
2. See the CPF macro in *z/OS MVS Programming: Authorized Assembler Services Reference ALE-DYN* for information on registering command prefixes.

General Considerations

Command processors that receive their input from SSI function code 10 should consider:

- Using the 4-byte console ID. This is found in the SSCMCNID field of the SSCM control block. An application that uses the MCSOPER interface (see MCSOPER in *z/OS MVS Programming: Authorized Assembler Services Reference LLA-SDU* can only be assured of receiving the command response by using this field on a WTO. If a 1-byte console ID must be used, use the value in the SSCMSCID field. Please note, however, that the 1-byte console ID found in the SSCMSCID field cannot guarantee the command response message will reach the MCSOPER user who issued the command. Instances of 1-byte console ID usage will be recorded by the Console ID Tracking facility, which is invoked with the CNZTRKR macro. For information regarding the removal of 1-byte console IDs in favor of 4-byte console IDs, see *z/OS MVS Planning: Operations*.
- Using the SSCMAUTH field. Use the flag settings of the SSCMAUTH field to test the command authority of the caller. This field is mapped by the UCMAUTH field in the UCME (IEECUCM).
- Using the SSCMCART field. All command response messages issued through a WTO should use the values passed in the SSCMCNID field (above) and in the SSCMCART field. The use of these values ensures proper delivery of the message to the command issuer.

Considerations for Command Processing Calls in a Sysplex:

In a sysplex, command processing SSI calls are made to subsystems:

- On the originating console's system only, when the command is not routed to any other system in the sysplex.
- On the originating console's system only, when the command is routed to another system in the sysplex as the result of the location (L=) operand on the command or the specification of a console by name.
- On the receiving system only, when it is a prefix command that is routed through the MCS command prefix facility.
- On both the originating system and the receiving system, when the ROUTE command is issued, as follows:
  - On the originating system for the ROUTE command.
  - On the receiving system for the command that is routed.

Considerations for Commands That Specify System Symbols:

When a command contains system symbols, MVS provides the command text to the SSI *after* it substitutes text for the system symbols. For example, if the following command is entered to display a console group on system SYS1:

```
DISPLAY CNGRP,G=(CN1GRP&SYSCLONE.)
```

The SSI receives the following text (assuming that the default for &SYSCLONE., the last two characters of the system name, is taken):

```
DISPLAY CNGRP,G=(CN1GRPS1)
```

If the function routine requires the original command text (the one that existed *before* symbolic substitution), it can access the SSCMOLIB field in the SSCM (see *z/OS MVS Data Areas* in the z/OS Internet library (http://www.ibm.com/systems/z/os/zos/bkserv/) for a description of the IEFSSCM mapping macro, which maps the SSCM).

Do not use the function routine to add or change system symbols in command text. The system cannot substitute text for system symbols that are added or changed through the SSI.

Delete Operator Message — SSI Function Code 14

The Delete Operator Message call (SSI function code 14) is issued for every DOM that is created. SSI function code 14 allows the SSI to find DOMs intended for your installation-written subsystem.

Type of Request

Broadcast SSI call.

Use Information

Your installation can use the DOM Processing call (SSI function code 14) to:

- Receive a DOM for processing
- Monitor DOM traffic
- Verify that a WTO or WTOR message has been deleted

Issued to

- All active subsystems that indicate they support the DOM processing function when the system (MVS) issues the DOM Processing call.

Related SSI Codes

None.

Related Concepts

You should know how to recognize and use DOMs. See *z/OS MVS Programming: Authorized Assembler Services Reference ALE-DYN* and *z/OS MVS Programming: Authorized Assembler Services Guide*.

Environment

Review “Function Routines/Function Codes” on page 461, which describes both the general environment on entry to your function routine and other programming considerations that your function routine should take into account.

If you decide to set up your subsystem to handle DOM processing calls, make sure that your function routine is in place before you enable the subsystem to handle SSI function code 14. IBM recommends that you use the IEFSSVT macro to notify MVS that your subsystem should be given control whenever DOM Processing calls are made. IEFSSVT macro services are available only to dynamic subsystems. Subsystems that are not dynamic can use the IEFJSVEC service; see “Building the SSVT” on page 575 and “Enabling Your Subsystem for New Functions” on page 580 for more information.

DOMs occur frequently with MVS. Function routines should therefore be as efficient as possible. Do not code a function routine that enters an explicit WAIT or uses a system service that enters a WAIT because entering a wait can cause degraded system performance.

Data areas commonly referenced are mapped by the following mapping macros. IBM recommends you include them in your function routine:

- IEFSSOBH
- IEFJSSIB
- IEFJSSOB
- IEFSSDM
- IHADOMC

The delete operator message mapped by IHADOMC represents a DOM.

The function routine receives control in the following environment:

Environment variable	Value
Minimum authorization	Supervisor state with PSW key 0
Dispatchable unit mode	Task
AMODE	24-bit or 31-bit
Cross memory mode	PASN=HASN=SASN
ASC mode	Primary
Interrupt status	Enabled for I/O and external interrupts
Locks	No locks held
Control parameters	The SSOB, SSIB, and SSDM control blocks reside in storage below 16 megabytes.
Recovery	The function routine should provide an ESTAE-type recovery environment. See *z/OS MVS Programming: Authorized Assembler Services Reference EDT-IXG* for more information on these macros. Failure to establish a recovery environment ends the processing of the current DOM if an abend occurs. The function routine's recovery should specify a retry point (address) and return 4 on the SETRP macro before returning to the system. Use the retry point to complete a normal return to the function routine's caller. When the function routine returns to its caller under these circumstances, it should indicate to the system, by setting both register 15 and the SSOBRETN to zero, to take no action against the message. See the next topic, Input Register Information, for how to specify to the system the action you want your function routine to take. **Note:** Although the system supports AMODE=24 SSI routines monitoring function code 14, IBM recommends converting these SSI routines to AMODE=31. In a future release, IBM may change the location of the SSOB, SSIB, and SSDM control blocks to reside in 31-bit storage.

Input Register Information

On entry to the function routine the general purpose registers contain:

Register	Contents
0	Address of the subsystem's SSCVT
1	Address of the SSOB control block
13	Address of a standard 18-word save area
14	Return address
15	Entry point address

Input Parameters

Input parameters for the function routine are SSOB, SSIB, SSDM, and DOMC.

SSOB Contents: MVS sets the following fields in the SSOB control block on input:

Field Name	Description
SSOBID	Identifier 'SSOB'

SSOBLEN
Length of the SSOB (SSIBHSIZ) control block

SSOBFUNC
SSI function code 14 (SSOBDOM)

SSOBSSIB
Address of the SSIB control block

SSOBRETN
Return code from the previous function routine (when SSI function code 14 is operating in broadcast mode)

SSOBINDV
Address of the function-dependent area (SSDM control block)

SSDM Contents: MVS sets these fields in the SSDM control block on input:

Field Name	Description
SSDMLEN	Length of the SSDM (SSDMSIZE) control block
SSDMVRSN	Version level of the SSDM (SSDMVRID) control block
SSDMACRN	Identifier 'SSDM'
SSDMSEND	Indicator that the DOM request should be communicated to other systems
SSDMDMCB	The address of that part of the DOMC that is passed to the subsystem
SSDMDMC2	The address of the entire DOMC that is passed to the subsystem

DOMC Contents: The address of the DOMC control block is in SSDMDMC2. See *z/OS MVS Data Areas* in the z/OS Internet library (http://www.ibm.com/systems/z/os/zos/bkserv/) for the DOMC information.

Output Register Information: Upon exit from the function routine, the general purpose registers must contain:

Register	Contents
0-12	Restored to contents on entry
14	Return address
15	Return code

Return Code Information: For MVS to process broadcast functions properly, you must use the following return code convention for function routines that handle broadcast calls: when a routine returns control to the SSI, set register 15 to 0.

The DOM Processing call does not have any return codes.

Output Parameters: Any changes made to the DOMC are ignored.

Restrictions: None.

General Considerations: IBM recommends that the function routine does not alter the DOMC (all changes to the DOMC are ignored).

Help Call — SSI Function Code 48

The Help call (SSI function code 48) provides the ability for a subsystem to get control during processing of a SYSABEND and a SYSUDUMP.

Type of Request

Broadcast SSI call.

Use Information

Your subsystem can use the SSI function code 48 to assist in an ABEND Dump.

Issued to

All active subsystems that indicate they support the Help function when the system (MVS) issues the Help call.

Related SSI Codes

None.

Related Concepts

None.

Environment

Review "Function Routines/Function Codes" on page 461, which describes both the general environment on entry to your function routine and other programming considerations that your function routine should take into account.

Data areas commonly referenced are mapped by the following mapping macros. IBM recommends you include them in your function routine:

- IEFSSOBH
- IEFJSSIB
- BLSABDPL

The function routine receives control in the following environment:

Environment variable	**Value**
Minimum authorization	Supervisor state with PSW key 0
Dispatchable unit mode	Task
AMODE	24-bit or 31-bit
Cross memory mode	PASN=HASN=SASN
ASC mode	Primary
Interrupt status	Enabled for I/O and external interrupts
Locks	No locks held
Control parameters	The SSIB, SSOB, and ABDPLcontrol blocks reside in storage below 16 megabytes.
Recovery	The function routine should provide an ESTAE-type recovery environment. For more information on how to set up an ESTAE-type recovery environment, see the topic on writing recovery routines in *z/OS MVS Programming: Authorized Assembler Services Guide*

Figure 40 on page 523 shows the environment on entry to the function routine for SSI function code 48.

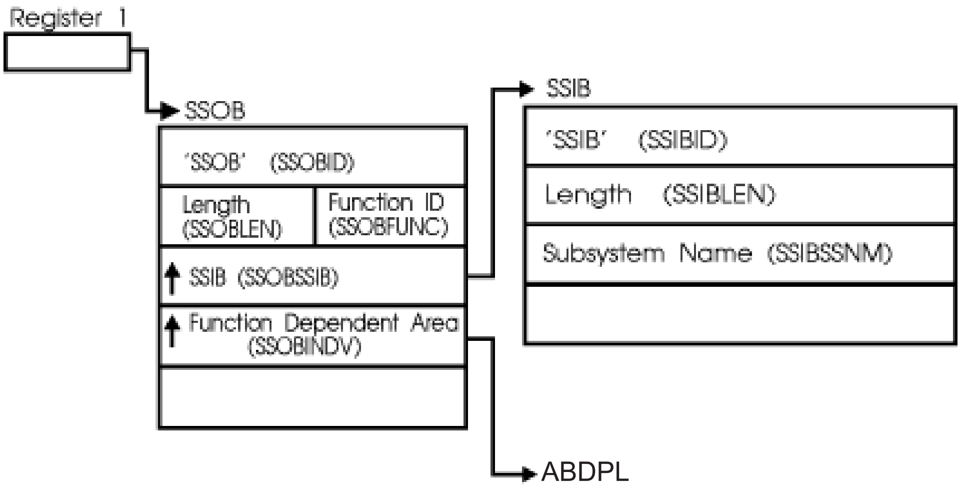
Register 1
SSOB
'SSOB' (SSOBID)
Length (SSOBLEN)
Function ID (SSOBFUNC)
SSIB (SSOBSSIB)
Function Dependent Area (SSOBINDV)
SSIB
'SSIB' (SSIBID)
Length (SSIBLEN)
Subsystem Name (SSIBSSNM)
ABDPL

Figure 40. Environment on Entry to the Function Routine for SSI Function Code 48

Input Register Information

On entry to the function routine the general purpose registers contain:

Register	Contents
0	Address of the subsystem's SSCVT
1	Address of the SSOB control block
13	Address of a standard 18-word save area
14	Return address
15	Entry point address

Input Parameters

Input parameters for the function routine are:

- SSOB
- SSIB
- ABDPL

SSOB Contents: MVS sets the following fields in the SSOB control block on input:

Field Name	Description
SSOBID	Identifier 'SSOB'
SSOBLEN	Length of the SSOB (SSOBHSIZ) control block
SSOBFUNC	SSI function code 48
SSOBSSIB	Address of the SSIB control block

SSOBRETN
Return code from previous subsystem function routine or zero.

Because broadcast requests are routed to all active subsystems, the SSOBRETN field contains the return code value set by some previously invoked subsystem or zero. See “Output Register Information” on page 491 for a list of possible SSOBRETN return codes.

SSOBINDV
Address of the function dependent area (ABDPL block)

SSIB Contents: MVS sets the following fields in the SSIB control block on input:

Field Name	Description
SSIBID	Identifier 'SSIB'
SSIBLEN	Length of the SSIB (SSIBSIZE) control block
SSIBSSNM	Subsystem name — name of the subsystem enabled to receive this function code.

Output Register Information

Upon exit from the function routine, the general purpose registers must contain:

Register	Contents
0-12	Restored to contents on entry
14	Return address
15	Return code

Return Code Information

For MVS to process broadcast functions properly, you must use the following return code conventions for function routines that handle broadcast calls. When a routine returns control to the SSI:

- Set register 15 to 0.
- Set the SSOBRETN field in the SSOB control block to one of the following:

Return Code (Decimal)	Meaning
0	The function routine recognized the request but did not process it.
4	The function routine recognized the request and processed it.

Early Notification of End-of-Task Call — SSI Function Code 50

The Early Notification of End-of-Task call (SSI function code 50) provides the ability to do task-related resource clean up. Whenever a task ends, all active subsystems that are enabled to receive SSI function code 50 are given control from the SSI before resource managers are given control. Each subsystem function routine will get control for every task that ends.

Note: This broadcast request is issued before many resource managers have been given control, but not all resource managers. For instance, the following resource managers receive control before this Early Notification of End-of-Task call:

- Availability Manager (AVM)
- SVC Dump

Type of Request

Broadcast SSI call.

Use Information

Your subsystem can use SSI function code 50 to clean up any resources for a task associated with a particular subsystem, and free any resources not normally handled by a resource manager.

Because your function routine will get control for every Early Notification of End-of-Task call, using your own subsystem might not be the most efficient way to do your own clean up for ending tasks. The preferred way to define your own resource manager is through the use of the RESMGR macro. The RESMGR service can be used to receive control for specific ending tasks, rather than having to check each ending task or address space to see if it used the subsystem. For a general description of resource managers and how they can be defined at both IPL time and dynamically, see *z/OS MVS Programming: Authorized Assembler Services Guide*.

Issued to

- All active subsystems that indicate they support the Early Notification of End-of-Task function when the system (MVS) issues the Early Notification of End-of-Task call.

Related SSI Codes

SSI function code 50 is almost identical to SSI function code 4 (End-of-Task call). The only difference is that, for SSI function code 50, your function routine is given control before most resource managers are given control, whereas, for SSI function code 4, your function routine is given control after most resource managers are given control. If you are interested in obtaining control after most resource managers have been invoked, see SSI function code 4 (End-of Task).

Related Concepts

None.

Environment

Review “Function Routines/Function Codes” on page 461, which describes both the general environment on entry to your function routine and other programming considerations that your function routine should take into account.

If you decide to set up your subsystem to handle Early Notification of End-of-Task calls, make sure that your function routine is in place before you enable the subsystem for SSI function code 50. IBM recommends that you use the IEFSSVT macro to notify MVS that your subsystem should be given control whenever Early Notification of End-of-Task calls are made. IEFSSVT macro services are available only to dynamic subsystems. Subsystems that are not dynamic can still use the IEFJSVEC service; see “Building the SSVT” on page 575 and “Enabling Your Subsystem for New Functions” on page 580 for more information.

The subsystem function routine runs in the address space of the ending task. Because each subsystem function routine is called for every ending task, the subsystem function routine should not be a long running program. That is, the function routine should quickly determine if the subsystem was ever associated with the ending task and, if not, return to the system. Also, do not code a function routine that enters an explicit WAIT or uses a system service that enters a WAIT. Entering a WAIT can cause degraded system performance.

Data areas commonly referenced are mapped by the following mapping macros. IBM recommends you include them in your function routine:

- IEFSSOBH
- IEFJSSIB
- IEFSSET

The function routine receives control in the following environment:

Environment variable	**Value**
Minimum authorization	Supervisor state with PSW key 0
Dispatchable unit mode	Task
AMODE	24-bit or 31-bit
Cross memory mode	PASN=HASN=SASN
ASC mode	Primary
Interrupt status	Enabled for I/O and external interrupts
Locks	No locks held
Control parameters	The SSIB, SSOB, and SSET control blocks reside in storage below 16 megabytes.
Recovery	The function routine should provide an ESTAE-type recovery environment. See *z/OS MVS Programming: Authorized Assembler Services Guide* for more information on an ESTAE-type recovery environment.

Figure 41 shows the environment on entry to the function routine for SSI function code 50.

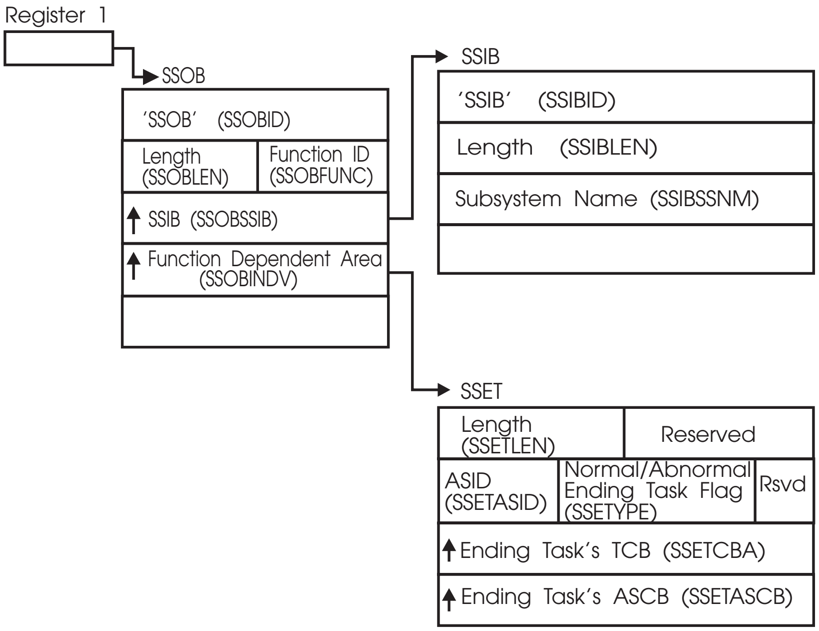
Register 1
SSOB
'SSOB' (SSOBID)
Length (SSOBLEN)
Function ID (SSOBFUNC)
SSIB (SSOBSSIB)
Function Dependent Area (SSOBINDV)
SSIB
'SSIB' (SSIBID)
Length (SSIBLEN)
Subsystem Name (SSIBSSNM)
SSET
Length (SSETLEN)
Reserved
ASID (SSETASID)
Normal/Abnormal Ending Task Flag (SSETYPE)
Rsvd
Ending Task's TCB (SSETCBA)
Ending Task's ASCB (SSETASCB)

Figure 41. Environment on Entry to the Function Routine for SSI Function Code 50

Input Register Information

On entry to the function routine the general purpose registers contain:

Register	**Contents**
0	Address of the subsystem's SSCVT
1	Address of the SSOB control block
13	Address of a standard 18-word save area
14	Return address
15	Entry point address

Input Parameters

Input parameters for the function routine are:

- SSOB
- SSIB
- SSET

SSOB Contents: The following fields in the SSOB control block are set on input:

Field Name
Description

SSOBID
Identifier 'SSOB'

SSOBLEN
Length of the SSOB (SSOBHSIZ) control block

SSOBFUNC
SSI function code 50 (SSOBFEOT)

SSOBSSIB
Address of the SSIB control block

SSOBRETN
Return code from previous subsystem function routine or zero.

Since broadcast requests are routed to all active subsystems, upon entry to the function routine SSOBRETN contains the return code value set by the previously invoked subsystem function code(s) or zero. See “Output Register Information” on page 528 for a list of possible SSOBRETN return codes.

SSOBINDV
Address of the function dependent area (SSET control block)

SSIB Contents: The following fields in the SSIB control block are set on input:

Field Name
Description

SSIBID
Identifier 'SSIB'

SSIBLEN
Length of the SSIB (SSIBSIZE) control block

SSIBSSNM
Subsystem name — name of subsystem which is enabled to receive this function code.

SSET Contents: The following fields in the SSET control block are set on input:

Field Name	Description
SSETLEN	Length of the SSET (SSETSIZE) control block
SSETASID	ASID of address space in which task was active
SSETFLAG	Flag indicators • **SSETYPE ON** — indicates an abnormal ending task • **SSETYPE OFF** — indicates a normal ending task
SSETCBA	Address of ending task's TCB
SSETASCB	Address of ending task's ASCB

Output Register Information

Upon exit from the function routine, the general purpose registers must contain:

Register	Contents
0-12	Restored to contents on entry
14	Return address
15	Return code

Return Code Information

For MVS to process broadcast functions properly, you must use the following return code conventions for function routines that handle broadcast calls. When a routine returns control to the SSI:

- Set register 15 to 0.
- Set the SSOBRETN field in the SSOB control block to one of the following:

Return Code (Decimal)	Meaning
0	The function routine recognized the request but did not process it.
4	The function routine recognized the request and processed it.

Request Subsystem Version Information Call — SSI Function Code 54

The Request Subsystem Version Information Call (SSI function code 54) provides a requesting program the ability to obtain version-specific information about a user-supplied subsystem. The information in “Request Subsystem Version Information Call — SSI Function Code 54” on page 60 describes what happens when SSI function code 54 is issued to the IBM-supplied subsystems (master or JES) by user-provided calling programs or routines.

The information that follows describes what a user-supplied subsystem needs to provide so that it can process incoming SSI function code 54 requests from callers that request information like the information provided by the two IBM-supplied subsystems. The user-supplied subsystem must then provide both the function routine to handle this request, as well as the information concerning the specific returned information. The user-supplied subsystem must provide information to the callers, because all version information returned to the caller is defined by, and has meaning only to, the user-supplied subsystem.

Type of Request

Directed SSI call.

Use Information

A subsystem may want to allow users to obtain the following information about itself:

- Product function modification identifier (FMID)
- Product version number
- Subsystem common name (such as 'XYZ1')
- Any other information that the subsystem wishes to present to the caller.

Issued to

- A user-supplied subsystem

Related SSI Codes

None.

Related Concepts

You need to understand:

- What the caller of the SSI function code 54 must code and what the caller expects to receive. See “Request Subsystem Version Information Call — SSI Function Code 54” on page 60 for a description of this Request Subsystem Version Information call from a calling program's point of view.
- What the format of the IEFSSVI functional extension is as defined in “Request Subsystem Version Information Call — SSI Function Code 54” on page 60.

Environment

Data areas commonly referenced are mapped by the following mapping macros. IBM recommends you include them in you function routine:

- IEFSSOBH
- IEFJSSIB
- IEFSSVI

The function routine receives control in the following environment:

Environment variable	Value
Minimum authorization	Any state, any key, depending on the implementation of the function routine. However, IBM suggests that you process this function in problem state, any key.
Dispatchable unit mode	Task
AMODE	24-bit or 31-bit, depending on the implementation of the function routine. If 24-bit AMODE, the callers of the routine must obtain all their control parameters below 16 megabyte storage so that the serving routine can address them. IBM recommends this program runs in AMODE 31.
Cross memory mode	PASN=HASN=SASN

Environment variable	**Value**
Interrupt status	Enabled for I/O and external interrupts
Locks	No locks held
Control parameters	Above or below 16 megabytes depending on the implementation of the routine. However, if the routine runs in AMODE 24, the caller must obtain the control parameters and pass to the serving routine below the line so that it can address them.
Recovery	The function routine should provide an ESTAE-type recovery environment. See *z/OS MVS Programming: Authorized Assembler Services Guide* for more information on how to set up an ESTAE-type recovery environment.

Figure 42 shows the environment on entry to the function routine for SSI function code 54.

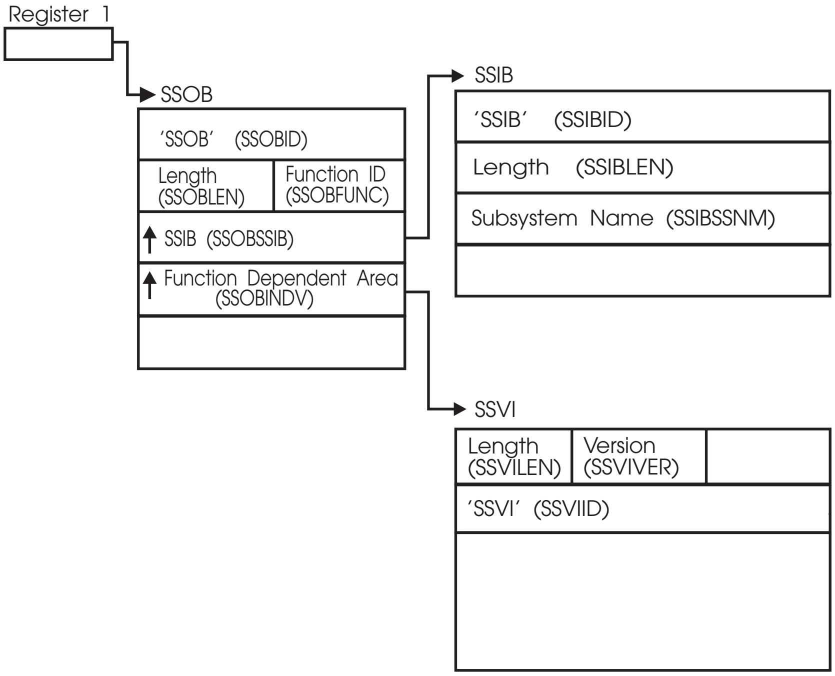

Register 1
SSOB
'SSOB' (SSOBID)
Length (SSOBLEN)
Function ID (SSOBFUNC)
SSIB (SSOBSSIB)
Function Dependent Area (SSOBINDV)
SSIB
'SSIB' (SSIBID)
Length (SSIBLEN)
Subsystem Name (SSIBSSNM)
SSVI
Length (SSVILEN)
Version (SSVIVER)
'SSVI' (SSVIID)

Figure 42. Environment on Entry to the Function Routine for SSI Function Code 54

Input Register Information

On entry to the function routine the general purpose registers contain:

Register	**Contents**
0	Address of the SSCVT
1	Address of the SSOB control block
13	Address of a standard 18-word save area
14	Return address of the requestor of the service
15	Entry point address

Input Parameters

Input parameters for the function routine are:

- SSOB
- SSIB
- SSVI

SSOB Contents: The caller sets the following fields in the SSOB control block on input:

Field Name	Description
SSOBID	Identifier 'SSOB'
SSOBLEN	Length of SSOB control block
SSOBFUNC	SSI function code 54 (SSOBSSVI)
SSOBSSIB	Address of SSIB control block
SSOBINDV	Address of function dependent area (SSVI control block)

SSIB Contents: The caller sets the following fields in the SSIB control block on input:

Field Name	Description
SSIBID	Identifier 'SSIB'
SSIBLEN	Length of SSIB control block
SSIBSSNM	Subsystem name — name of the user provided subsystem invoked

SSVI Contents: See “Request Subsystem Version Information Call — SSI Function Code 54” on page 60 for the format of the input SSVI that your function routine expects to process.

Output Register Information

Upon exit from the function routine, the general purpose registers must contain:

Register	Contents
0-12	Restored to contents on entry
14	Return Address
15	Return code

Return Code Information

Set register 15 to zero.

Output Parameters

Output parameters for the function routine are:

- SSVI

The function routine performs processing to return the subsystem version information, and returns this information to the caller through settings, field updates, and pointers to information contained in the SSVI control block.

In addition, the information fields (For example, SSVIFMID, SSVIVERS, and SSVICNAM) are defined by, and have meaning only to, the function routine.

SSVI Contents: If the function routine returned successfully to the caller, the function routine may return the following information in the SSVI control block:

Field Name	**Description**
SSOBRETN	The function routine sets this field to SSVIOK (decimal 0).
SSVIRLEN	The function routine sets this field to the number of bytes that is used to return the requested information. This value includes the fixed section as well as the system variable section.
SSVIRVER	The function routine sets this field to the version of the SSVI macro used (SSVICVER).
SSVIFLEN	The function routine sets this field to the length of the fixed header output section (SSVIFSIZ).
SSVIASID	A 2-byte field that contains the ASID of the subsystem if the subsystem has an address space and supports the use of this field.
SSVIFMID	The function routine sets this field (left-justified, and padded to the right with blank (X'40') characters) to the function routine's FMID, if available.
SSVIVERS	The function routine sets this field (left-justified, and padded to the right with blank (X'40') characters) to the version of the subsystem installed. The function routine defines and uses the version naming conventions and meanings.
SSVICNAM	The function routine sets this field (left-justified, and padded to the right with blank (X'40') characters) to the processing subsystem's common name. For example, a subsystem defined as 'JOHN' might choose to return the SSVICNAM value of 'JOHNNY'. The subsystem defines the common name.
SSVIPLVL	This 1-byte field contains the product level of the subsystem. The content of the field is defined by the subsystem. This field should only be used if the caller-supplied version in field SSVIVER is greater than or equal to 2.

SSVISLVL
This 1-byte field contains the service level of the subsystem. The content of the field is defined by the subsystem.

This field should only be used if the caller-supplied version in field SSVIVER is greater than or equal to 2.

SSVIUDOF
The function routine sets this field to zero (there is no installation variable output section).

SSVISDOF
The function routine sets this field to the offset of the start of the system variable section (same value as SSVIFLEN), if the function routine wants to supply system variable information.

The DSECT SSVIVDAT mapping begins at this offset, within the SSVI control block that the caller provided to the function routine. The caller must provide an SSVI control block large enough to contain the fixed section and system variable section beginning at this offset (SSVISDOF) past the start of the fixed section (SSVIHEAD).

The function routine may provide a system variable output section that contains additional information returned to the caller and mapped using SSVIVDAT. If it doesn't provide this, the SSVISDOF field must be set to zero.

The function routine sets the first halfword of this system variable information section to the length of the system variable section (not including itself) in the SSVIVLEN field, so that the first byte of the character string starts past the SSVIVLEN field.

For example, the function routine may choose to return the following character string to the caller:

```
,EXAMPLE_SWITCH='NO'
```

The function routine places the length of the character string, 20 bytes (decimal) in the SSVIVLEN field, followed by the character string, beginning at the SSVIDAT field. The first byte at the SSVIDAT field contains an EBCDIC value for the comma in front of the word 'EXAMPLE'.

Note that the comma is the first character of the character string even if only a single keyword value is being returned. See the “Request Subsystem Version Information Call — SSI Function Code 54” on page 528 for more information on the syntax of the returned system variable sections. IBM recommends that your function routine also use the same syntax conventions.

If the function routine returned unsuccessfully to the caller, the system function may provide any of the following processing depending on the reasons for the unsuccessful return:

- Insufficient Storage

  The function routine has determined that the requestor has not supplied a storage area large enough to contain the requested information. That is, the caller has not provided a value in the SSVILEN field that is large enough to contain both the fixed section, as well as any possible system variable section (length plus actual data). The function routine therefore sets the following fields:

  Field Name
  Description

SSOBRETN
The function routine sets SSOBRETN to the value of SSVINSTR (decimal 8).

SSVIRLEN
The function routine sets SSVIRLEN to the amount of storage needed to satisfy the request.

The function routine determines the SSVIRLEN value by adding the length of the fixed header section (SSVIFSIZ) to the length of the system variable output section, plus two bytes (for the length value) of the returned string.

Suppose the caller in the example above only provided 30 decimal bytes for the returned information. Our function routine would return decimal 70 in the SSVIRLEN field as follows:

1. 48 — decimal value of the defined symbol SSVIFSIZ
2. 2 — length of the SSVIVLEN field (2 bytes long)
3. 20 — length of the character string (,EXAMPLE_SWITCH='NO').

All other fields in the SSVI control block are not set by the function routine.

- Requestor does not provide a valid SSVI

  The SSVI control block that is supplied by the caller should be validity-checked by the function routine. The following validations are suggested:

  - The SSOBINDV value in the SSOB control block should be non-zero.
  - The SSVILEN field supplied by the caller should be equal to or greater than SSVIMSIZ (an equated value within the SSVI).
  - The SSVIID field supplied by the caller should contain the EBCDIC characters 'SSVI'.
  - The SSVIVER field supplied by the caller should be non-zero.

    The current version of the SSVICVER field is equated to SSVIVONE (decimal 1).

    Future versions of the SSVI control block must have their version number increased, so both the caller and the function routine are able to determine what information is expected and provided.

  If any of the above conditions are not true, the function routine must set the SSOBRETN field as follows:

  Field Name
  Description

  SSOBRETN
  The function routine sets SSOBRETN to the value of SSVIPARM (decimal 16).

  All other fields in the SSVI control block are not set by the function routine.

- An abend or logical error within the function routine occurs

  It is possible that an abend or logical error occurs in your routine. IBM supplies an equate symbol for this return code. If your routine chooses to use it, the function routine must set the following field:

  Field Name
  Description

  SSOBRETN
  The function routine sets SSOBRETN to the value of SSVIABLG (decimal 24).

All other fields in the SSVI control block are not set by the function routine.

SMF SUBPARM Option Change Call — SSI Function Code 58

The SMF SUBPARM Option Change call (SSI function code 58) allows a user subsystem to be notified that the SUBPARM option in the SMF parmlib member for their subsystem has been changed.

Type of Request

Directed SSI call.

Use Information

Your subsystem can use SSI function code 58 when it wants to be notified of changes that have been made to the SMF SUBPARM parameter. The SMF SUBPARM parameter is used to pass accounting information to the subsystem.

Issued to

- The subsystem whose SUBPARM option was changed by the SET SMF or SETSMF command.

Related SSI Codes

None.

Related Concepts

You need to understand:

- The interaction between the SMF parmlib option (SUBPARM), the SMF macros (SMFSUBP and SMFCHSUB) and this function code. See “Passing Accounting Parameters to Your Subsystem” on page 469 for a description of this relationship and an example of the associated processing.

Environment

Review “Function Routines/Function Codes” on page 461, which describes both the general environment on entry to your function routine and other programming considerations that your function routine should take into account.

If you decide to set up your subsystem to handle SMF SUBPARM option change calls, make sure that your function routine is in place before you enable the subsystem to handle SSI function code 58. IBM recommends that you use the IEFSSVT macro to notify MVS that your subsystem should be given control whenever SMF SUBPARM Option Change calls are made. IEFSSVT macro services are available only to dynamic subsystems. Subsystems that are not dynamic can still use the IEFJSVEC service; see “Building the SSVT” on page 575 and “Enabling Your Subsystem for New Functions” on page 580 for more information.

Data areas commonly used by SSI function code 58 are mapped by the following mapping macros. IBM recommends you include them in your function routine:

- IEFSSOBH
- IEFJSSIB
- IEFSSSM

The function routine receives control in the following environment:

Environment variable	Value
Minimum authorization	Supervisor state with PSW Key 0
Dispatchable unit mode	Task
AMODE	24-bit or 31-bit

Environment variable	Value
Cross memory mode	PASN=HASN=SASN
ASC mode	Primary
Interrupt status	Enabled for I/O and external interrupts
Locks	No locks held
Control parameters	The SSOB, SSIB, and SSSM control blocks reside in storage below 16 megabytes.
Recovery	None

Figure 43 shows the environment at the time of the call for SSI function code 58.

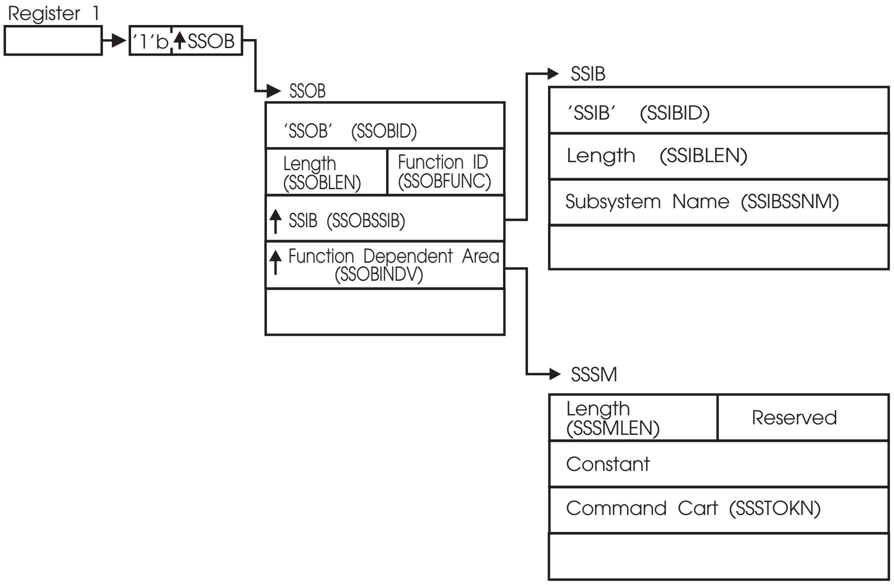
Register 1
'1'b ↑SSOB
SSOB
'SSOB' (SSOBID)
Length (SSOBLEN)
Function ID (SSOBFUNC)
↑ SSIB (SSOBSSIB)
↑ Function Dependent Area (SSOBINDV)
SSIB
'SSIB' (SSIBID)
Length (SSIBLEN)
Subsystem Name (SSIBSSNM)
SSSM
Length (SSSMLEN)
Reserved
Constant
Command Cart (SSSTOKN)

Figure 43. Environment at Time of Call for SSI Function Code 58

Input Register Information

On entry to the function routine the general purpose registers contain:

Register	Contents
0	Address of the SSCVT
1	Address of the SSOB control block
13	Address of a standard 18-word save area
14	Return address
15	Entry point address

On entry to the function routine the access registers are unused.

Input Parameters

Input parameters for the function routine are:

- SSOB
- SSIB

- SSSM

SSOB Contents: SMF sets the following fields in the SSOB control block on input:

Field Name
Description

SSOBID
Identifier 'SSOB'

SSOBLEN
Length of the SSOB control block

SSOBFUNC
SSI function code 58 (SSOBSMAC)

SSOBSSIB
Address of SSIB control block

SSOBINDV
Address of the function dependent area (SSSM control block)

SSIB Contents: SMF sets the following fields in the SSIB control block on input:

Field Name
Description

SSIBID
Identifier 'SSIB'

SSIBLEN
Length of the SSIB control block

SSIBSSNM
Subsystem name — name of the subsystem that this SMF SUBPARM Option Change call is directed to.

SSSM Contents: SMF sets the following fields in the SSSM control block on input:

Field Name
Description

SSSMLEN
Length of the SSSM control block

SSSMFLGS
Flags

- **SSSMSMFA —** SMF is active

The following flags identify the source of the SUBPARM parameter value for the subsystem:

- **SSSMMEMB —** Value from the parmlib member
- **SSSMRPLY —** Value from the operator reply
- **SSSMDFLT —** Value from the default table
- **SSSMCONF —** Value changed due to conflicts
- **SSSMCHNG —** Value changed by IPL or SET processing

You can use the following fields to communicate with the console that issued the SET SMF=xx or SETSMF command being processed:

SSSMCNID
Command console ID

SSSTOKN
Command CART

Output Register Information

Upon exit from the function routine, the general purpose registers must contain:

Register	Contents
0-12	Restored to contents on entry
14	Return address
15	Return code

Return Code Information

Upon return to the caller of SSI function code 58 (MVS or SMF), register 15 contains the smallest return code from the SSI and SSOBRETN contains the largest return code associated with the smallest return code from the SSI.

For MVS to process broadcast functions properly, you must use the following return code conventions for function routines that handle broadcast calls. When a routine returns control to the SSI:

- Set register 15 to 0.
- Set the SSOBRETN field in the SSOB control block to one of the following:

Return Code (Decimal)	Meaning
0	The function routine recognized the request but did not process it.
4	The function routine recognized the request and processed it.

Restrictions

The SMF SUBPARM Option Change call cannot be made to subsystems with the following names:

- SYS
- JES2
- JES3
- STC
- TSO
- ASCH.

Example

See “Passing Accounting Parameters to Your Subsystem” on page 469 for an example of the use of the SMF SUBPARM Option Change call.

Installation Supplied Subsystem

See “Passing Accounting Parameters to Your Subsystem” on page 469 for an example of the relationship of this function code to the options specified in the SMF parmlib member.

Tape Device Selection Call — SSI Function Code 78

The Tape Device Selection call (SSI function code 78) allows the subsystem function routine to receive control at least once for each job step JCL request or dynamic allocation invocation for a tape device. The function routine can then change the criteria the system uses when it selects tape devices to allocate.

Type of Request

Broadcast SSI call.

Use Information

Use SSI function code 78 to allow a subsystem to get control to influence the criteria the system uses in selecting the tape devices to allocate.

Issued to

- All active subsystems that indicate they support the Tape Device Selection call (SSI function code 78).

Related SSI Codes

None.

Related Concepts

You should understand the process the system uses to select the tape devices to be allocated. The following steps describe how the system processes the tape requests for each job step:

1. The system initializes fields in the tape allocation subsystem interface mapping (IEFSSTA, called SSTA in this section). The SSTA mapping consists of:
   - An SSTA header (one for each jobstep) that contains general information about the jobstep
   - A DD section (one for each DD statement or dynamic allocation request requiring a non-SMS managed tape device) that contains information about the DD
   - A device request section (one for each device indicated on the DD statement) that contains information about the tape device request
   - An eligible device array entry (one for each eligible device) that contains selection criteria.

   In initializing the eligible device array entry, the system considers the following facts about the tape device requests and the characteristics of available devices:
   - The type of requests (such as a request for a private, scratch, or specific volume)
   - Unit information on the requests

     The system uses the eligible device table (EDT) to determine which devices are eligible to satisfy the request.
   - Characteristics of each eligible tape device, such as:
     - Does the device already have the requested volume mounted
     - Is the device online or offline
     - Is the device dedicated or automatically switchable.

     These characteristics are reflected in bits in the SSTAIBMM field.

     Several of the IBM eligibility bits are set based on whether a volume is already mounted on the device. The following helps you understand the conditions that can cause a volume to be already mounted on a device.

     A volume may already be mounted for any one of the following conditions:
     - A volume was premounted as the result of a MOUNT command issued by the operator
     - A volume was inserted into the drive by the operator, but no MOUNT command was issued by the operator
     - A volume is mounted on a drive because a prior step in the same job passed a data set to a subsequent step or the request specified RETAIN

- A volume is mounted on a drive because it is in use by another job

Within an eligible device array entry, the order of the characteristics reflects their relative importance. For example, whether a specific device is mounted is more important than whether the device is automatically switchable.

The system then builds a list of eligible tape devices and associated eligibility values generated from bits in the SSTAIBMM field in the eligible device array entry.

At this point, the system issues SSI function code 78, passes the SSTA (including the eligible device array), and gives your Tape Device Selection function routine a chance to affect the selection. When the function routine gets control, it can set bits in the SSTAUSRM field. If SSTAUSRM bits are set, the system generates eligibility values that combine SSTAUSRM settings and SSTAIBMM settings.

2. Based on the list of eligible devices and associated eligibility values built in step 1, the system selects the optimal device to allocate for the request.

   When the UNIT parameter of the request specifies an esoteric that consists of devices from multiple generics (for example, 3490 and 3590-1), the device preference order is used in conjunction with other IBM and user settings to choose the optimal device. Devices belonging to the generic that is higher in preference order naturally have preference over those belonging to a generic lower in the preference order. See *z/OS HCD Planning* for an explanation and directions for specifying the device preference order.

   You cannot specify the generic device type and it cannot be overridden in either IBM or user settings of SSI78. You can apply user settings to influence choice of an optimal device within a generic of a multi generic esoteric. To influence which generic contains the optimal device either change the device preference order using HCD or use the SSTAINEL setting for all devices in the generic which are not desirable. You can determine device type using EDTINFO (for details, see the SSTADNUM input parameter "SSTADNUM" on page 547).

Table 15 shows the logical relationship between the system settings and the user settings in the eligible device array entry. The first column shows the 1-bit fields the system sets in SSTAIBMM; the second column shows the 1-bit fields the function routine can set in SSTAUSRM. The criteria are listed in order of importance, from top to bottom. For example, the most important criteria are:

- SSTAINEL, a user field that can remove the device from consideration
- SSTADMND, a system field that identifies the device as the one specified on the DD statement.

The table shows how the user criteria interleave with system criteria.

Table 15. Relationship between System and User Criteria

Importance	System criteria (SSTAIBMM)	User criteria (SSTAUSRM)
1		SSTAINEL
2	SSTADMND	
3		SSTAUS01
4		SSTAUS02
5	SSTAONUN	
6		SSTAUS03
7		SSTAUS04

Table 15. Relationship between System and User Criteria (continued)

Importance	System criteria (SSTAIBMM)	User criteria (SSTAUSRM)
8	SSTANAFH	
9		SSTAUS05
10		SSTAUS06
11	SSTASPCM	
12		SSTAUS07
13		SSTAUS08
14	Generic device type not specified by a bit	
15		SSTAUS09
16		SSTAUS10
17	SSTAACL1	
18		SSTAUS11
19		SSTAUS12
20	SSTAACL2	
21		SSTAUS13
22		SSTAUS14
23	SSTAACL3	
24		SSTAUS15
25		SSTAUS16
26	SSTAVOLM	
27		SSTAUS17
28		SSTAUS18
29	SSTANVOL	
30		SSTAUS19
31		SSTAUS20
32	SSTAWVOL	
33		SSTAUS21
34		SSTAUS22
35	SSTAAVOL	
36		SSTAUS23
37		SSTAUS24
38	SSTAANAS	
39		SSTAUS25
40		SSTAUS26

Descriptions of SSTAIBMM fields are found in “Input Parameters” on page 545; descriptions of SSTAUSRM fields are found in “Output Parameters” on page 549.

Environment

Review “Function Routines/Function Codes” on page 461, which describes both the general environment on entry to your function routine and other programming considerations that your function routine should take into account.

If you decide to set up your subsystem to handle tape device selection calls, make sure that your Tape Device Selection function routine is in place before you enable the subsystem to receive SSI function code 78. IBM recommends that you use the IEFSSVT macro to notify MVS that your subsystem should be given control only when tape selection calls are made. IEFSSVT macro services are available only to dynamic subsystems. Subsystems that are not dynamic can still use the IEFJSVEC service. See “Building the SSVT” on page 575 and “Enabling Your Subsystem for New Functions” on page 580 for more information.

Data areas commonly referenced are mapped by the following mapping macros. IBM recommends you include them in your function routine:

- CVT
- IEFJESCT
- IEFSSOBH
- IEFJSSIB
- IEFSSTA

The function routine receives control in the following environment:

Environment variable	**Value**
Minimum authorization	Supervisor state with PSW key 1
Dispatchable unit mode	Task
AMODE	31-bit
Cross memory mode	PASN=HASN=SASN
ASC mode	Primary
Interrupt status	Enabled for I/O and external interrupts
Locks	Serialization for allocation resources is held by Allocation
Control parameters	The SSIB, SSOB, and SSTA control blocks can reside either above or below 16 megabytes.
Recovery	The function routine must provide an ESTAE-type recovery environment. See *z/OS MVS Programming: Authorized Assembler Services Guide*.

The following figures show the environment at the time of the call for SSI function code 78.

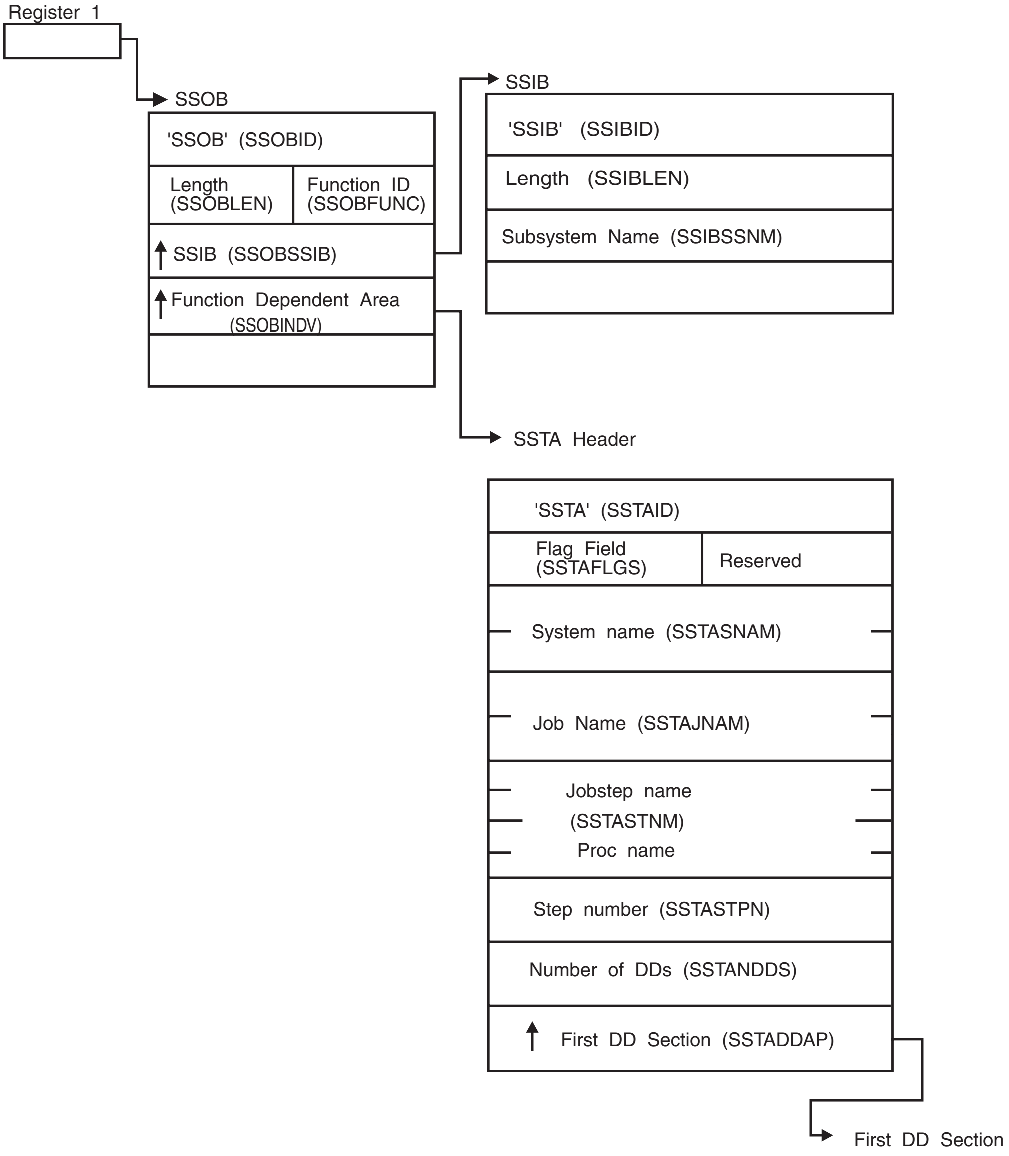
Register 1
SSOB
'SSOB' (SSOBID)
Length (SSOBLEN)
Function ID (SSOBFUNC)
SSIB (SSOBSSIB)
Function Dependent Area (SSOBINDV)
SSIB
'SSIB' (SSIBID)
Length (SSIBLEN)
Subsystem Name (SSIBSSNM)
SSTA Header
'SSTA' (SSTAID)
Flag Field (SSTAFLGS)
Reserved
System name (SSTASNAM)
Job Name (SSTAJNAM)
Jobstep name
(SSTASTNM)
Proc name
Step number (SSTASTPN)
Number of DDs (SSTANDDS)
First DD Section (SSTADDAP)
First DD Section

Figure 44. Environment at Time of Call for SSI Function Code 78

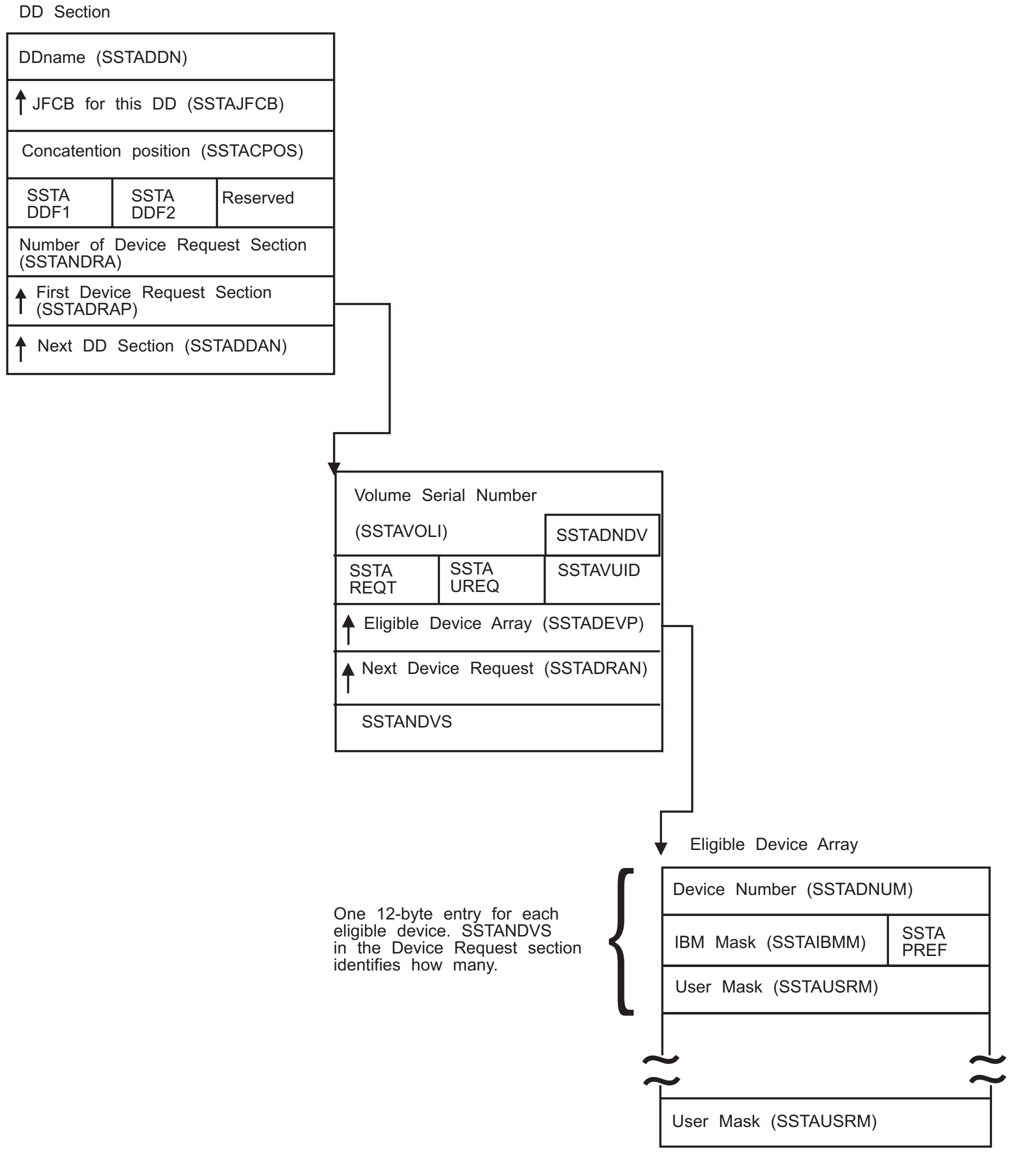
DD Section
DDname (SSTADDN)
JFCB for this DD (SSTAJFCB)
Concatention position (SSTACPOS)
SSTA DDF1
SSTA DDF2
Reserved
Number of Device Request Section (SSTANDRA)
First Device Request Section (SSTADRAP)
Next DD Section (SSTADDAN)
Volume Serial Number (SSTAVOLI)
SSTADNDV
SSTA REQT
SSTA UREQ
SSTAVUID
Eligible Device Array (SSTADEVP)
Next Device Request (SSTADRAN)
SSTANDVS
Eligible Device Array
One 12-byte entry for each eligible device. SSTANDVS in the Device Request section identifies how many.
Device Number (SSTADNUM)
IBM Mask (SSTAIBMM)
SSTA PREF
User Mask (SSTAUSRM)
User Mask (SSTAUSRM)

Figure 45. Continuation of Environment at Time of Call for SSI Function Code 78

Input Register Information

On entry to the function routine the general purpose registers contain:

Register	**Contents**
0	Address of the subsystem's SSCVT
1	Address of the SSOB
13	Address of a standard 18-word save area
14	Return address
15	Entry point address

Input Parameters

Input parameters for the function routine are:

- SSOB
- SSIB
- SSTA

SSOB Contents: MVS sets the following fields in the SSOB on input:

Field Name	Description
SSOBID	Identifier 'SSOB'
SSOBLEN	Length of the SSOB (SSOBHSIZ) control block
SSOBFUNC	SSI function code 78 (SSOBTALC)
SSOBSSIB	Address of the SSIB control block
SSOBRETN	Return code value set by previously invoked function routine, or zero
SSOBINDV	Address of the function-dependent area (SSTA control block)

SSIB Contents: MVS sets the following fields in the SSIB on input:

Field Name	Description
SSIBID	Identifier 'SSIB'
SSIBLEN	Length of the SSIB (SSIBSIZE)
SSIBSSNM	Name of the subsystem enabled to receive this function code

SSTA Header Contents: There is one SSTA header for each job step or dynamic allocation that requests at least one non-SMS managed, non-DUMMY, non-SUBSYStem tape device. IBM sets the following fields on input:

Field Name	Description
SSTAID	Identifier 'SSTA'
SSTAVERS	Current SSTA version number
SSTAFLGS	Type of call, such as: • First call for this job step or dynamic allocation invocation • Call from allocation recovery • Call from tape allocation retry processing

SSTASNAM
System name

SSTAJNAM
Job name

SSTASTNM
Job step name or procedure name and job step name. If the job step is not a procedure step, SSTASTNM is an 8-byte job step name and an 8-byte reserved field. If the job step is a procedure step, SSTASTNM is an 8-byte procedure step name and an 8-byte job step name of the step that called the procedure.

SSTASTPN
Step number

SSTANDDS
Number of DDs

SSTADDAP
Pointer to the first DD array for this job step. Set to zero if no DD array entries exist.

SSTAHDRL
Length of the SSTA header

DD Array Entry: There is one DD array entry for each DD statement or dynamic allocation that requests a non-SMS managed, non-DUMMY, non-SUBSYStem tape device. IBM sets the following fields on input:

Field Name
Description

SSTADDN
DD name. Blank if other than the first DD in a concatenation

SSTAJFCP
Pointer to the JFCB for this DD section

SSTACPOS
Concatenation position. Set to 1 for the first DD in a concatenation, 2 for the second DD, etc. Set to 1 for a DD that is not part of a concatenation

SSTADDF1
DD level information, including DISP and GDG specifications

SSTADDF2
DD level information byte 2, including unit affinity indicator

SSTANDRA
Number of devices requested

SSTADRAP
Pointer to the first device request section for this DD

SSTADDAN
Pointer to the next device request section

SSTADDAL
Length of one DD array entry

Device Request Array Entry: There is one device request array entry for each device or unit requested on a non-SMS managed, non-DUMMY, non-SUBSYStem

DD statement or dynamic allocation reqest. For example, UNIT=(TAPE,2) would generate two device request array entries. IBM sets the following fields on input:

Field Name
Description

SSTAVOLI
Volume serial number. Relevant only for a specific request (indicated by bit SSTASPEC in field SSTAREQT)

SSTADNDV
Half word count of the number of eligible devices. The maximum number of eligible devices that this field can contain is 65535.

Note: This field is for compatibility only. Use the SSTANDVS field for a full word count.

SSTAREQT
Device request information flags:

- SSTAPRV — indicates a private request
- SSTASPEC — indicates a specific request
- SSTADEFR — indicates volume mounting is deferred

SSTAVUID
Volume unit ID for affinity

SSTADEVP
Pointer to the eligible device array for this DD

SSTADRAN
Pointer to the next device request array entry

SSTANDVS
Number of eligible devices.

SSTADRAL
Length of one device request array entry

The function routine can set the SSTAUDFR and SSTAUPRF fields in the device request section. See “Output Parameters” on page 549.

Eligible Device Array Entry: There is one eligible device array entry for each device eligible for a particular DD array entry. IBM sets the following fields on input:

Field Name
Description

SSTADNUM
Device number, in EBCDIC. Example: The representation of device number 5B0 would be F0F5C2F0. You can use this number as input to EDTINFO to obtain further information about the device, such as its generic device type and any esoteric service groups of which this device is a part. (See *z/OS MVS Programming: Assembler Services Reference ABE-HSP*, GC28-1910, for additional information about EDTINFO.)

SSTAIBMM
Following are the eligibility bits that the system sets. (Unless otherwise specified, the IBM eligibility bits apply to both dedicated and automatically switchable devices.)

Field Name
Description

SSTADSK
This device is skipped for this request

SSTADMND
This device is demanded by this request. (A request is a demand request when the UNIT parameter contains a specific device number, for example, UNIT=237.)

SSTAONUN
The device is online and unallocated

SSTANAFH
This automatically switchable device is not assigned to another system

SSTASPCM
The volume mounted on this device is the one requested

SSTAACL1
Either no automatic cartridge loader (ACL) is installed and this is a specific request, or the ACL is active and the request is nonspecific (public or private)

SSTAACL2
The installed ACL is inactive

SSTAACL3
Either the ACL is active and this is a specific request, or no ACL is installed and this is a nonspecific request (public or private) request

SSTAVOLM
One of the following conditions can occur:

- A volume is not mounted on this device. This is a specific volume request. The device is automatically switchable and the last volume dismounted from this device is the needed volume.
- A volume is mounted on this device. This is a non-specific request for a public volume and the volume currently mounted on this device is public.

SSTANVOL
A volume is not mounted on this device for one of these possible conditions:

- This is a specific volume request. The device is automatically switchable and the last volume dismounted from this device is not the needed volume.
- This is a non-specific request.
- This device is not automatically switchable.

SSTAWVOL
A volume is mounted on this automatically switchable device, and it matches the volume needed for this specific request. However, the last volume dismounted from this device also matches.

SSTAAVOL
A volume is mounted on this device and one of the following conditions is true:

- This is a specific volume request and the volume currently mounted on this device is automatically switchable and the last volume dismounted from this device is not the needed volume.
- This is a specific volume request and there is a volume currently mounted on this device, but it is not the requested volume.
- This is a non-specific, private request for any volume.
- This is a non-specific, public request and the volume currently mounted is private.

SSTANAS
This device is not automatically switchable

The function routine can set the SSTAPREF and SSTAUSRMM fields in the eligible device array entry. See “Output Parameters.”

Output Register Information

Upon exit from the function routine, the general purpose registers must contain:

Register	Contents
0	Used as a work register by the system
1	Address of the SSOB
2-13	Restored to contents on entry
14	Return address
15	Return code

Return Code Information

For MVS to process broadcast functions properly, you must use the following return code conventions for function routines that handle broadcast calls. When a routine returns control to the SSI:

- Set register 15 to 0.
- Set the SSOBRETN field in the SSOB to one of the following:

Return Code (Decimal)	Meaning
0	The function routine recognized the request but did not process it.
4	The function routine recognized the request and processed it.

Output Parameters

Output parameters for the function routine are:

Field Name	Description
SSTAUDFR	The field in device request section that forces a request to have mounting deferred until the dataset is actually opened
SSTAUPRF	The field in the device request section that indicates that the function routine is to override the actions the system takes if many devices have the same eligibility value. In other words, the system turns to this field to break a tie when more than one tape device has the same attributes.

- If the function routine does not code this field, the system makes a random selection from among the devices with equal attributes.
- If the function routine codes this field, it must tell the system, in the SSTAPREF entry for each eligible device, how to break a tie.

Allocation examines all eligible devices on an individual basis. Therefore, it is unlikely that the system will need a tie-breaker.

SSTAPREF

The field in the eligible device array entry that contains the preference value for the system to use. This field allows the function routine to influence the allocation of devices when all other attributes are the same. Use this field only if you set SSTAUPRF.

SSTAUSRM

The field in the eligible device array entry that allows the function routine to add its own criteria to the eligibility mask that the system associates with each eligible device:

Field Name

Description

SSTAINEL

Mark the device ineligible

SSTAUSnn

The remaining 1-bit fields, SSTAUS01 through SSTAUS26, can be defined and set by your function routine. Table 15 on page 540 shows how each of these bits relates to the system mask SSTAIBMM.

SSTAEDAL

Length of one device request array entry

Restrictions

SSI function code 78 is not available to change the selection of SMS-managed or JES3-managed tape devices

Note that while MVS allocation processes your function routine, it is not processing other allocation requests. This might degrade performance.

Example

An installation writes a Tape Device Selection function routine to ensure that tape devices 270 and 271 are available only for HSM tape requests. (This example is included in SYS1.SAMPLIB as member IEFTASSI.)

```
TAPESSI  CSECT
TAPESSI  AMODE  31
TAPESSI  RMODE  ANY
******************* START OF SPECIFICATIONS ****************************
*                                                                      *
*01*   NAME=                                                           *
*                                                                      *
*01*   TYPE= Sample Subsystem                                          *
*                                                                      *
*01*   FIRST ELIGIBLE PRODUCT= HBB5520                                 *
*                                                                      *
*01*   FIRST INELIGIBLE PRODUCT= HBB5510                               *
*                                                                      *
*01*   OPERATION=                                                      *
*        This is a sample taple allocation subsystem. It will          *
*        reserve devices 270 and 271 for only HSM jobs.                *
*                                                                      *
*       1.  Chain save areas                                         *
*       2.  See if the JOBNAME is HSM*                               *
*       3.  If it is not then will ensure that                       *
*           devices 270 and 271 are not eligible                     *
*       4.  Return to SSI                                            *
*                                                                    *
*03*     SOFTWARE DEPENDENCIES:                                      *
*                                                                    *
*04*            REQUIRED PRODUCTS= HBB5520                           *
*                                                                    *
*02*     OUTPUT:                                                     *
*                                                                    *
*03*            MSGIDS= NONE                                         *
*                                                                    *
*03*            ABENDCODES=  NONE                                    *
*                                                                    *
******************** END OF SPECIFICATIONS ***************************
**********************************************************************
*                                                                    *
*  Base register:  12                                                *
*                                                                    *
*  Other register use:                                               *
*                  10   SSCVT                                        *
*                   2   SSOB                                         *
*                   9   SSIB                                         *
*                   8   SSTA                                         *
*                                                                    *
*  Attributes:                                                       *
*     This routine must be reentrant and reside in a library         *
*     accessible at the time subsystem initialization occurs.        *
*     Supervisor state, AMODE(31), RMODE(ANY)                        *
*                                                                    *
**********************************************************************
**********************************************************************
* Chain saveareas                                                    *
**********************************************************************
         USING TAPESSI,12
         SAVE  (14,12)                Save caller registers
         LR    12,15                  Establish module base register
*
         LR    10,0                   Establish addressability
         USING SSCT,10                 to the SSCVT
         LR    2,1                    Establish addressability
         USING SSOB,2                  to the SSOB
*
         GETMAIN R,LV=84,SP=230       Get working storage
         ST    13,4(1)                Chain saveareas forward
         ST    1,8(13)                Chain saveareas backward
         LR    13,1                   Point to this module's savearea
         LR    11,1                   Point to dynamic storage
         USING DYNAM,11               Base dynamic storage
*
**********************************************************************
* Validate the request                                               *
**********************************************************************
         L     9,SSOBSSIB             Establish addressability
         USING SSIB,9                  to the SSIB
         CLC   SSIBSSNM,SSCTSNAM      Verify the subsystem name
         BNE   ERROR                  This should never happen
         L     8,SSOBINDV             Pointer to function dependent
*                                      area
**********************************************************************
* Check for job name beginning with HSM                              *
**********************************************************************
```

```
         USING SSTA,8                  Set basing
         CLC   HSMNAME,SSTAJNAM        Check job name
         BE    NOCHECK                 Skip checks if not HSM*

************************************************************************
* Job name does not begin with HSM so must not allow devices           *
* 0270 and 0271 to be eligible to satisfy request.                     *
************************************************************************
         L     7,SSTADDAP              Get address of DD entries
         USING SSTADDA,7               Base DD entries
         L     4,SSTANDDS              Get number of DDs
         LTR   4,4                     Check for zero
         BZ    NOCHECK                 If zero then no DDs to check
         ST    4,NUMDDS                Else save in local storage
DDLOOPS  EQU   *                       Start looping through DDs
         L     6,SSTADRAP              Get address of first request
         USING SSTADRA,6               Base request entries
         L     4,SSTANDRA              Get number of requests
         LTR   4,4                     Check for zero
         BZ    DDLOOPE                 If zero then no requests
         ST    4,NUMREQS               Else save in local storage
REQLOOPS EQU   *                       Start looping through requests
         L     5,SSTADEVP              Get address of first device
         USING SSTAEDA,5               Base device entries
         L     4,SSTANDVS              Get number of devices eligible
         LTR   4,4                     Check for zero
         BZ    REQLOOPE                If zero then no devices
         ST    4,NUMDEVS               Else save in local storage

************************************************************************
* Check each eligible device entry to make sure that devices           *
* 0270 and 0271 are not eligible to this request.                      *
************************************************************************
DEVLOOPS EQU   *                       Start looping through devices
         CLC   SSTADNUM,HSMDEV1        Is device reserved for HSM?
         BE    MAKEINEL                Yes, go make ineligible
         CLC   SSTADNUM,HSMDEV2       Is device reserved for HSM?
         BNE   DEVLOOPE                No, bypass making ineligible
MAKEINEL EQU   *
         OI    SSTAUSE1,B'10000000'    Mark device ineligible
DEVLOOPE EQU   *                       End of eligible device loop
         LA    3,12                    Get size of SSTAEDA entry
         ALR   5,3                     Add to pointer to get next
         L     4,NUMDEVS               Get local counter
         LA    3,1                     Get amount to decrement count
         SLR   4,3                     Decrement count
         ST    4,NUMDEVS               Save device count
         LTR   4,4                     Check device count
         BNZ   DEVLOOPS                Loop back if more to process
REQLOOPE EQU   *                       End of request loop
         L     6,SSTADRAN              Get address of next request
         L     4,NUMREQS               Get local counter
         LA    3,1                     Get amount to decrement count
         SLR   4,3                     Decrement count
         ST    4,NUMREQS               Save request count
         LTR   4,4                     Check request count
         BNZ   REQLOOPS                Loop back if more to process
DDLOOPE  EQU   *                       End of DD loop
         L     7,SSTADDAN              Get address of next DD entry
         L     4,NUMDDS                Get local counter
         LA    3,1                     Get amount to decrement count
         SLR   4,3                     Decrement count
         ST    4,NUMDD                 Save DD count
         LTR   4,4                     Check DD count
         BNZ   DDLOOPS                 Loop back if more to process
NOCHECK  EQU   *
         MVC   SSOBRETN,=F'0'          Indicate function success
         B     RETURN
```

```
ERROR    EQU   *
         MVC   SSOBRETN,=F'20'         Indicate function failure
***********************************************************************
***********************************************************************
* Return to the SSI                                                   *
***********************************************************************
RETURN   EQU   *
         L     8,4(13)                 Pointer to caller's savearea
         FREEMAIN R,LV=84,A=(13),SP=230
         LR    13,8
         LM    14,12,12(13)            Restore caller' registers
         LA    15,0                    RC=0
         BSM   0,14                    Return to the SSI
*
HSMNAME  DC    CL3'HSM'                HSM Jobname
HSMDEV1  DC    CL4H'270'                  Device reserved for HSM
HSMDEV2  DC    CL4H'271'                  Device reserved for HSM
*
DYNAM    DSECT                         Dynamic storage
SAVEAREA DS    18F                     Module save area
NUMDDS   DS    F                       Number of DDs
NUMREQS  DS    F                       Number of requests
NUMDEVS  DS    F                       Number of eligible devices
*
         IEFJSCVT
         IEFSSOBH
         IEFJSSIB
         IEFSSTA
         END
```

Chapter 7. Troubleshooting Errors in Your Subsystem

This chapter describes common types of errors that occur when you are using subsystems, and includes steps you can take to troubleshoot these errors. Errors can occur when you are:

- Defining your subsystem to MVS
- Processing a subsystem function request

Handling Initialization Errors

If you specified a suffix on the SSN system parameter and it does not exist, the system issues the following message:

```
IEF758I   SUBSYSTEM AVAILABILITY LIMITED
          DESCRIPTION NOT FOUND IN SYS1.PARMLIB
```

For an IPL, do not define a subsystem more than once in a combination of IEFSSNxx members that can be used together or within a single member. (The same subsystem can appear in two different IEFSSNxx members when the members will not be used together.) If MVS detects a duplicate name, the duplicate subsystem is not defined and its initialization routine does not receive control. The system issues the following message:

```
IEFJ003I  DUPLICATE SUBSYSTEM subname NOT INITIALIZED
```

If you specified an initialization routine (yyyyyyyy) in IEFSSNxx but the system could not locate the initialization routine, the system issues the following message:

```
IEFJ004I   SUBSYSTEM subname NOT INITIALIZED - initrtn NOT FOUND
```

If you get this message, the subsystem will be defined to the system but not initialized, so jobs which require the functions of this subsystem may fail.

If you specify an initialization routine in IEFSSNxx but an abend occurs in the initialization routine (while the system was initializing the subsystem), the system issues the following message:

```
IEFJ005I   subname INITIALIZATION ROUTINE initrtn ABENDED
```

If you get this message, examine the DUMP data set to find which subsystem initialization routine failed. If the abend occurred during the processing of an initialization routine specified in IEFSSNxx, a dump is requested only if the initialization routine does not request one first. If you are coding an initialization routine, you should provide recovery and consider whether you want a dump if a problem occurs.

If problems occur when the system tries to obtain storage to build control blocks for a subsystem, the system issues the following message:

```
IEFJ006I   subname SUBSYSTEM UNAVAILABLE, INSUFFICIENT STORAGE
```

If you get this message, see *z/OS MVS System Messages, Vol 8 (IEF-IGD)* for more information.

If an abend occurred while the system was initializing a subsystem and the system requests a dump, the system issues the following message:

© Copyright IBM Corp. 1988, 2013

```
IEFJ007I   A SYSTEM ERROR HAS OCCURRED DURING INITIALIZATION OF
           SUBSYSTEM subname
```

If you get this message, examine the DUMP data set to identify the problem.

If an incorrect keyword is found in IEFSSNxx, the following message is written:

```
IEFJ001I   memname LINE line-number:  ERROR IN SUBSYSTEM DEFINITION,
           REFER TO HARDCOPY LOG
```

If you get this message, the system continues processing the rest of IEFSSNxx, and you should correct the keyword indicated. The system does not process the subsystem definition containing the incorrect keyword.

Handling function request errors

When you are troubleshooting errors during SSI function request processing, do the following:

- Capture the system dump
- Identify the type of error
- Determine the cause of the error.

Capturing the System Dump

If an abend occurs while processing a subsystem function request, the SSI requests a dump (unless a subsystem function routine takes one first). The dump title is similar to the following:

```
TITLE=COMPON=SSI,COMPID=5752SC1B6,ISSUER=IEFJSaaa,
MODULE=IEFJbbbb,ABEND=xxx,REASON=yyyyyyyy DUMP
```

The issuer is one of the following:

- IEFJSARR, if the caller of the SSI is in task mode and holds no locks
- IEFJSFRR, if the caller of the SSI is in SRB mode or holds a lock
- IEFJSPCE, if the error is a recursive failure in the SSIs recovery.

For function request errors, the module is one of the following:

- IEFJRASP, for broadcast function requests
- IEFJSRE1, for directed function requests or for broadcast function requests that have not yet been passed to IEFJRASP.

Other module names may appear for errors in SSI services other than routing function requests.

Another variation of the dump title is the following:

```
DUMP TITLE=COMPON=SSI,COMPID=5752SC1B6,ISSUER=IEFJSaaa,
MODULE=IEFJbbbb,ABEND=xxx,REASON=yyyyyyyy,SNAME=zzzz
```

This variation will appear when SSI has determined that the error occurred in a subsystem function routine. The dump title identifies the name of the failing subsystem. SNAME refers to the subsystem, while zzzz is the name of the subsystem.

After creating a subsystem vector table, the SSI retains only the addresses of the function routines represented in the table, and therefore cannot identify the failing routine by name.

The dump title indicates an SSI routine as the failing CSECT, even when the error occurred in a subsystem function routine. After creating a subsystem vector table, the SSI retains only the address of the function routines represented in the table, and therefore cannot identify the failing routine by name.

Identifying the Type of Error

The most common causes of errors while processing function requests are:

- Function routine error
- Function routine address that is not valid
- Vector table address that is not valid
- Control block chain that is not valid
- Parameter list passed to the SSI that is not addressable
- SSI error

Identifying the Problem Type when the VRA is Available

You can identify the type of error when you examine the variable recording area (VRA) in the summary dump or in the output from EREP. The available information may include:

- A footprint area that contains a set of footprints and pointers describing the status of the SSI request
- An English translation of the footprints
- The address of the SSOB control block describing the request
- The address of the SSIB control block identifying the subsystem to which the request is directed
- The address of the SSCVT associated with the target subsystem
- The address of the active SSVT being used by the target subsystem to route function requests
- The address of the target subsystem function routine
- The name of the failing IEFJFRQ exit routine
- The return address of the SSI's caller

The actual information may vary, depending on the type and location of the error.

The English translation of the footprints identifies the point at which the error occurred, and may include one of the following:

- Abend in the function routine

  The error occurred when the SSI transferred control to the subsystem function routine. The error is probably due to one of the following:

  - The function routine address in the subsystem vector table is not valid
  - The function routine failed. In this case, either the function routine did not establish its own recovery, or it percolated to the SSI's recovery.
- Abend in IEFJFRQ routine

  The error occurred in an exit routine associated with the IEFJFRQ exit point. The VRA contains the name of the failing exit routine.
- Error referencing the SSVT

  The error occurred when the SSI tried to reference an SSVT control block that was not SSI-managed, but that was being used by the subsystem to route its requests.
- Error referencing the SSCVT

The error occurred when the SSI tried to reference the SSCVT describing the target subsystem. The target subsystem is either not dynamic, or is dynamic but is not using an SSI-managed SSVT control block to route function requests.

- Error locating the subsystem

  The error occurred when the SSI tried to locate system control blocks associated with the target subsystem.
- Error validating the request

  The error occurred when the SSI tried to validate the SSOB/SSIB control block chain describing the function request.

Contact the IBM Support Center for any other footprints that you may receive.

Identifying Problem Type when the VRA is not Available

You can identify the type of error when the VRA is not available by checking the PSW and the registers at the time of the error as follows:

- If the PSW equals register 15, it probably indicates that the subsystem function routine address in the SSVT is not valid.
- If the PSW contains a valid address in a module other than IEFJSRE1 or IEFJRASP, it is probably a subsystem function routine error. The error occurred in this routine.
- If the PSW contains a valid address in IEFJSRE1 or IEFJRASP, the error occurred while referencing subsystem related control blocks, the input parameter list, or in the SSI. Examine the SSCVT chain pointed to by the JESSSCT field for pointers that are not valid. The SSIDATA IPCS subcommand displays the subsystems defined to the SSI based on this chain, and may help identify a problem. See *z/OS MVS IPCS Commands* or *z/OS MVS Diagnosis: Reference* for more information.

Determining the Cause of the Error

You can determine the cause of the error by collecting the following information:

- Identity of the failing subsystem (or subsystem targeted by the request)
- Identity of the subsystem function requested
- Identity of the subsystem function routine
- Identity of the caller of the SSI
- Identity of the failing IEFJFRQ exit routine (if applicable)

Identifying the Failing Subsystem

The SSIBSSNM field of the SSIB control block identifies the subsystem targeted by the current SSI request. The VRA contains the address of the SSOB control block used to route the current request, and also contains the address of the SSIB if the error did not occur while validating the SSOB control block chain. Note that the SSIB and SSOB control blocks pointed to by the VRA may be copies of the control blocks originally provided by the SSIs caller, and may contain information other than what was provided in the original control blocks. The VRA contains the address of the SSOB control block, and the SSOBSSIB field of the SSOB control block locates the SSIB control block. The SSOBINDV field, if non-zero, points to the SSOB extension originally provided by the caller.

You can also use the current SSCVT to identify the current subsystem. If the address of the SSCVT appears in the VRA, the SSCTSNAM field identifies the subsystem.

If the footprints indicate that the error occurred while locating the target subsystem, and the SSI was processing a broadcast request, the VRA identifies the last successfully processed subsystem. The VRA section with the header 'LAST PROCESSED SSCVT', lists the address of the last subsystem to which the current request was successfully routed. Subsystems receive broadcast requests in the order in which they appear in the SSCVT chain (anchored by the JESSSCT field of the JESCT data area). The failing subsystem should be the next one in the SSCVT chain.

Identifying the Requested Subsystem Function

To identify the requested subsystem function, check the SSOBFUNC field of the SSOB control block. If the function code is not discussed in Chapter 3, “SSI Function Codes Your Program Can Request,” on page 13 or Chapter 6, “SSI Function Codes Your Subsystem Can Support,” on page 487, you may be able to identify the function request type by checking the SSOB extension pointed to by the SSOBINDV field. If the extension contains an eyecatcher, the format is normally SSxx, and the mapping macro for the extension is IEFSSxx. The mapping macro defines the value contained in the SSOBFUNC field, and describes the SSOB extension.

Identifying the Subsystem Function Routine

To identify the subsystem function routine, check the VRA. It contains the address of the failing routine. Identify the failing function routine by browsing backward in storage to find an eyecatcher. The information in the eyecatcher should also help identify the product with which the failing subsystem and function routine are associated.

Note: The high-order bit of the function routine address in the VRA or SSVT indicates the AMODE in which the routine receives control. When the high-order bit is set, the SSI passes control to the function routine in AMODE 31.

Identifying the Caller of the SSI

To identify the caller of the SSI, check the VRA. It contains the return address of the invoker of the IEFSSREQ macro (the caller of the SSI).

If the VRA is not available, locate the linkage stack associated with the work unit that was in control at the time of the error, and use the IPCS linkage stack formatting support to analyze the entries. The PSW from the current linkage stack entry is the caller's return address (assuming that the subsystem function routine did not issue any instructions that caused additional linkage stack entries).

Browse backward through storage from the PSW address to find an eyecatcher and identify the caller.

Identifying the Failing Exit Routine

To identify the failing exit routine, check the VRA. It contains the name of the routine if the error occurred in an IEFJFRQ exit routine. Search for the module name in the dump or review IBM or vendor product documentation to identify the product or application with which it is associated. If the failing exit routine is associated with a vendor product, contact the vendor to determine the cause of the error.

Chapter 8. Examples — Subsystem Interface Routines

This appendix has the following coding examples for the TSYS sample subsystem.

- "Example 1 — Subsystem Initialization Routine (TSYSINIT)"

  This example documents Product-Sensitive Programming Interfaces and Associated Guidance Information.
- "Example 2 — Subsystem Function Routine (WRITEIT)" on page 566

  This example documents General-Use Programming Interfaces and Associated Guidance Information.
- "Example 3 — Subsystem Function Routine (DELETEIT)" on page 568

  This example documents General-Use Programming Interfaces and Associated Guidance Information.
- "Example 4 — Subsystem Function Routine (LISTEN)" on page 569

  This example documents Product-Sensitive Programming Interfaces and Associated Guidance Information.
- "Example 5 — Subsystem Requesting Routine (TSYSCALL)" on page 571

  This example documents General-Use Programming Interfaces and Associated Guidance Information.

See Chapter 1, "Introduction to Subsystems and the Subsystem Interface (SSI)," on page 1, Chapter 4, "Setting Up Your Subsystem," on page 461, and Chapter 2, "Making a Request of a Subsystem," on page 7 for information on coding subsystem routines.

Example 1 — Subsystem Initialization Routine (TSYSINIT)

```
TSYSINIT RSECT
TSYSINIT AMODE ANY
TSYSINIT RMODE ANY
***********************************************************************
*  Function:                                                          *
*   This is the TSYS subsystem initialization routine.  It is         *
*   called as the result of subsystem definition in any of the        *
*   following ways:                                                   *
*                                                                     *
*     IEFSSNxx parmlib member                                         *
*     SETSSI ADD command                                              *
*     IEFSSI REQUEST=ADD macro                                        *
*                                                                     *
*   Initialization for the TSYS subsystem consists of the following   *
*   steps:                                                            *
*                                                                     *
*     1. Establish recovery                                           *
*     2. Issue the IEFSSVT REQUEST=CREATE macro to create the         *
*        subsystem vector table                                       *
*     3. Issue the IEFSSI REQUEST=OPTIONS macro to specify            *
*        optional information specific to the TSYS subsystem          *
*     4. Issue the IEFSSI REQUEST=PUT macro to store information      *
*        for use by the TSYS subsystem function routines              *
*     5. Issue the IEFSSI REQUEST=ACTIVATE macro to enable the        *
*        TSYS subsystem to receive function requests                  *
*     6. Cancel recovery and return                                   *
*                                                                     *
*   INPUT                                                             *
```

© Copyright IBM Corp. 1988, 2013

```
*     Register 1 points to a two-word parameter list                   *
*     - Word 1 = address of the SSCVT for the TSYS subsystem           *
*     - Word 2 = address of the JSIPL                                  *
*                                                                      *
*   REGISTER USE                                                       *
*      1 - TSYSCB                                                      *
*     10 - SSCVT                                                       *
*     11 - JSIPL                                                       *
*     12 - Code register                                               *
*     13 - Data register                                               *
*                                                                      *
*   MACROS                                                             *
*     CVT                                                              *
*     ESTAE                                                            *
*     FREEMAIN                                                         *
*     GETMAIN                                                          *
*     IHASDWA                                                          *
*     IEFJESCT                                                         *
*     IEFJSCVT                                                         *
*     IEFSSI                                                           *
*     IEFSSVT                                                          *
*     IEFSSVTI                                                         *
*     RETURN                                                           *
*     SETRP                                                            *
*     WTO                                                              *
*                                                                      *
************************************************************************
*
************************************************************************
* Chain saveareas.                                                     *
************************************************************************
         USING TSYSINIT,12
         SAVE  (14,12)                 Save caller's registers
         LR    12,15                   Establish module base register
         LR    10,1                    Save pointer to parameter list
         GETMAIN R,LV=WORKALEN         Get working storage
         ST    13,4(1)                 Chain saveareas backward
         ST    1,8(13)                 Chain saveareas forward
         LR    13,1                    Point to this module's savearea
*
         USING WORKAREA,13             Addressability to work area
         L     11,4(10)                Establish addressability
         USING JSIPL,11                 to the JSIPL
         L     10,0(10)                Establish addressability
         USING SSCT,10                  to the SSCVT
*
************************************************************************
* Establish ESTAE                                                      *
************************************************************************
         XC    ESTAED,ESTAED           Clear ESTAE parameter list
         L     8,=A(TSYSERR)           Address of ESTAE routine
         ESTAE (8),CT,PARAM=ARETRY,MF=(E,ESTAED)
         LTR   15,15                   If ESTAE failed
         BNZ   ESTAERR                  report it and return
*
************************************************************************
* Invoke the IEFSSVT REQUEST(CREATE) macro to build and initialize     *
* the vector table, using the static function routine input table.     *
* The function routines reside in LINKLIB and must be loaded to        *
* global storage to make them available to all address spaces.         *
* Register notation is used to identify the output token for           *
* demonstration purposes.                                              *
************************************************************************
         LA 2,TOKEN1
*
         IEFSSVT REQUEST=CREATE,SUBNAME=SSCTSNAM,SSVTDATA=ROUTINE1,    *
               OUTTOKEN=(2),LOADTOGLOBAL=YES,MAXENTRIES=ENTRIES,       +
              RETCODE=RC,RSNCODE=REASON,                             +
              MF=(E,VTPARMS)
*
         B     TESTVTCR(15)            Check return code
*
TESTVTCR EQU   *
         B     ANCHORCB                 0 - Processing successful
         B     VTERR                    4 - Warning
         B     VTERR                    8 - Invalid parameters
         B     VTERR                   12 - Request failure
         B     VTERR                   16 - Error loading subsystem
         B     VTERR                   20 - System error
         B     VTERR                   24 - SSI service not available
*
ANCHORCB EQU   *                        Entry for vector table created
************************************************************************
* Initialize and anchor the subsystem-specific control block used     *
* by TSYS and its function routines.                                   *
************************************************************************
         GETMAIN R,LV=CBLEN,SP=241     Get storage for TSYS control    +
                                         block
         USING TSYSCB,1
         XC    TSYSCB,TSYSCB           Clear control block
         MVC   TSYSID(4),CBACRO        Move in eye-catcher
         LA    7,1                     Version 1
         STH   7,TSYSVER               Put version number in control   +
                                         block
         LA    7,CBLEN                 Get control block length
         STH   7,TSYSLEN               Put length in control block
         ST    1,CBADDR                Save control block address
         DROP  1
*
         IEFSSI REQUEST=PUT,SUBNAME=SSCTSNAM,SUBDATA1=CBADDR,          +
              RETCODE=RC,RSNCODE=REASON,                             +
              MF=(E,SSIPARMS)
*
         B     TESTPUT(15)             Check return code
*
TESTPUT  EQU   *
         B     OPTIONS                  0 - Processing successful
         B     SSIERR                   4 - Warning
         B     SSIERR                   8 - Invalid parameters
         B     SSIERR                  12 - Request failure
         B     SSIERR                  16 - Not defined
         B     SSIERR                  20 - System error
         B     SSIERR                  24 - SSI service not available
*
************************************************************************
* Inform the SSI that TSYS will respond to the SETSSI command.        *
************************************************************************
OPTIONS  EQU   *                        Entry for successful PUT
*
         IEFSSI REQUEST=OPTIONS,SUBNAME=SSCTSNAM,COMMAND=YES,          +
              RETCODE=RC,RSNCODE=REASON,                             +
              MF=(E,SSIPARMS)
*
         B     TESTOPT(15)             Check return code
*
TESTOPT  EQU   *
         B     ACTIVATE                 0 - Processing successful
         B     SSIERR                   4 - Warning
         B     SSIERR                   8 - Invalid parameters
         B     SSIERR                  12 - Request failure
         B     SSIERR                  16 - Not defined
         B     SSIERR                  20 - System error
         B     SSIERR                 24 - SSI service not available
*
ACTIVATE EQU   *                       Entry for successful OPTIONS
************************************************************************
* Activate the subsystem.                                              *
************************************************************************
         IEFSSI REQUEST=ACTIVATE,SUBNAME=SSCTSNAM,INTOKEN=TOKEN1,      +
               RETCODE=RC,RSNCODE=REASON,                              +
               MF=(E,SSIPARMS)
*
         B     TESTACT(15)
*
TESTACT  EQU   *
         B     ACTIVEOK                0 - Processing successful
         B     SSIERR                  4 - Warning
         B     SSIERR                  8 - Invalid parameters
         B     SSIERR                 12 - Request failed
         B     SSIERR                 16 - Not defined
         B     SSIERR                 20 - System error
         B     SSIERR                 24 - SSI service not available
*
ACTIVEOK EQU   *
         WTO 'TSYS - SUBSYSTEM INITIALIZED'
         B     DONE
*
VTERR    EQU   *                       Entry for IEFSSVT error
         MVC   FAILSRV(L'SSVTSRV),SSVTSRV  Get name of failing service
         B     ERRMSG                  Issue error message
*
SSIERR   EQU   *                       Entry for IEFSSI error
         MVC   FAILSRV(L'SSISRV),SSISRV  Get name of failing service
*
************************************************************************
* Convert the return and reason code and issue an error message.       *
************************************************************************
ERRMSG   EQU   *
         MVC   SERVERRD(SERVMSGL),SERVERRS  Copy static message
*
         L     7,RC                    Get return code
         CVD   7,DOUBLE                Convert to decimal
         UNPK  RCODE1,DOUBLE           Make return code printable
         MVZ   RCODE1+3,RCODE1
         MVC   SERVERRD+43(2),RCODE1+2  Put return code in message
*
         L     7,REASON                Get reason code
         CVD   7,DOUBLE                Convert to decimal
         UNPK  RCODE1,DOUBLE           Make reason code printable
         MVZ   RCODE1+3,RCODE1
         MVC   SERVERRD+55(4),RCODE1   Put reason code in message
*
         MVC   SERVERRD+18(L'FAILSRV),FAILSRV  Put name of failing    ++
                                         service in message
         WTO   MF=(E,SERVERRD),CONSNAME=JSICNAME  Issue message
         B     DONE

*
INITERR  EQU   *
         MVC   INITERRD(INITMSGL),INITERRS  Copy static message
         WTO   MF=(E,INITERRD),CONSNAME=JSICNAME  Issue message
         B     DONE
*
ESTAERR  EQU   *
         MVC   ESTAERRD(ESTAMSGL),ESTAERRS  Copy static message
         WTO   MF=(E,ESTAERRD),CONSNAME=JSICNAME  Issue message
         B     RETURN
*
************************************************************************
```

```
* Cancel the ESTAE and return to caller.                              *
***********************************************************************
DONE     EQU   *
         ESTAE 0
RETURN   EQU   *
         L     8,4(13)                 Pointer to caller's savearea
         FREEMAIN R,LV=WORKALEN,A=(13)
         LR    13,8
         RETURN (14,12),RC=0
*
***********************************************************************
* ESTAE routine.                                                      *
***********************************************************************
TSYSERR  EQU   *
         DROP  12                      Drop current addressability
         USING TSYSERR,15              Set addressability to TSYSERR
         LR    12,15                   Copy address of TSYSERR
         S     12,=A(TSYSERR-TSYSINIT) Reestablish code register
         DROP  15                      Drop addressability to TSYSERR
         USING TSYSINIT,12             Reset addressability
         CL    0,=F'12'                If no SDWA provided
         BE    TSYSERRA                Branch to percolate
         USING SDWA,1
         L     4,SDWAPARM
         L     4,0(4)
         DROP  1
         SETRP WKAREA=(1),RC=4,RETADDR=(4),FRESDWA=YES,RETREGS=YES
TSYSERRA EQU   *
         XR    15,15                   Indicate percolation
         BR    14
*
***********************************************************************
* Define static function routine input table.                         *
***********************************************************************
         IEFSSVTI TYPE=INITIAL,SSVTDATA=ROUTINE1,TABLEN=STABLEN
         IEFSSVTI TYPE=ENTRY,NUMFCODES=1,FCODES=254,FUNCNAME=WRITEIT
         IEFSSVTI TYPE=ENTRY,NUMFCODES=1,FCODES=255,FUNCNAME=DELETEIT
         IEFSSVTI TYPE=ENTRY,NUMFCODES=1,FCODES=9,FUNCNAME=LISTEN
         IEFSSVTI TYPE=FINAL
*
***********************************************************************
* Function routine data.                                              *
***********************************************************************
WRITEIT  DC    CL8'WRITEIT '
LISTEN   DC    CL8'LISTEN  '
DELETEIT DC    CL8'DELETEIT'
ENTRIES  DC    H'4'
SSVTSRV  DC    CL7'IEFSSVT'
SSISRV   DC    CL7'IEFSSI '
CBACRO   DC    CL4'TSCB'
*
ARETRY   DC    A(INITERR)
*
SERVERRS WTO 'TSYS ERROR IN xxxxxxx SERVICE, RETCODE xx, RSNCODE xxxx',+
               CONSNAME=,MF=L
SERVMSGL EQU   *-SERVERRS
*
INITERRS WTO 'TSYS - SUBSYSTEM INITIALIZATION FAILED',                +
               CONSNAME=,MF=L
INITMSGL EQU   *-INITERRS
*
ESTAERRS WTO 'TSYS - SUBSYSTEM ESTAE FAILED',                         +
               CONSNAME=,MF=L
ESTAMSGL EQU   *-ESTAERRS
*
*
         LTORG
```

```
*
WORKAREA DSECT
SAVEAREA DS    18F
         DS    0D
DOUBLE   DS    CL8                    CVD work area
RCODE1   DS    F                      Return/reason code in message
RC       DS    F                      Return code
REASON   DS    F                      Reason code
CBADDR   DS    F                      Control block address
FAILSRV  DS    CL7                    Name of failing service
         DS    0F
TOKEN1   DS    F                      Vector table token
*
         IEFSSVT MF=(L,VTPARMS)
*
         IEFSSI MF=(L,SSIPARMS)
*
SERVERRD WTO 'TSYS ERROR IN xxxxxxx SERVICE, RETCODE xx, RSNCODE xxxx',+
               CONSNAME=,MF=L
INITERRD WTO 'TSYS - SUBSYSTEM INITIALIZATION FAILED',                 +
               CONSNAME=,MF=L
ESTAERRD WTO 'TSYS - SUBSYSTEM ESTAE FAILED',                          +
               CONSNAME=,MF=L
*
ESTAED   ESTAE PARAM=ARETRY,MF=L
*
WORKALEN EQU *-WORKAREA
*
TSYSCB   DSECT 0D
TSYSID   DS    CL4                    Acronym
TSYSVER  DS    H                      Version
TSYSLEN  DS    H                      Length
*
CBLEN    EQU *-TSYSCB
*
         CVT DSECT=YES                CVT
*
         IEFJESCT                     JESCT
*
         IEFJSCVT                     SSCVT
*
         IEFJSRC                      SSI return and reason codes
*
         IEFJSIPL                     Initialization routine          +
                                        parameter list
*
         IHASDWA
*
         IEFSSVTI TYPE=LIST
*
         END
```

Example 2 — Subsystem Function Routine (WRITEIT)

```
WRITEIT  CSECT
WRITEIT  AMODE  ANY
WRITEIT  RMODE  ANY
***********************************************************************
*                                                                     *
*  Function:                                                          *
*                                                                     *
*     This function routine of the TSYS subsystem issues a WTO        *
*     to indicate that it has been entered.  The message identifier   *
*     of the WTO is returned to the caller in a function dependent    *
*     area.                                                            *
*                                                                      *
************************************************************************
*                                                                      *
*  Name of the module:  WRITEIT                                        *
*                                                                      *
*  System macros used:                                                 *
*                       FREEMAIN                                       *
*                       GETMAIN                                        *
*                       IEFJSCVT                                       *
*                       IEFJSSIB                                       *
*                       IEFSSOBH                                       *
*                       WTO                                            *
*                                                                      *
*  Base register:  12                                                  *
*                                                                      *
*  Other register use:                                                 *
*                  10   SSCVT                                          *
*                  11   SSOB                                           *
*                   9   SSIB                                           *
*                                                                      *
*  Attributes:                                                         *
*     This routine must be reentrant and reside in a library          *
*     accessible at the time subsystem initialization occurs.         *
*                                                                      *
************************************************************************
*
************************************************************************
* Chain saveareas                                                      *
************************************************************************
         USING WRITEIT,12
         SAVE  (14,12)                 Save caller registers
         LR    12,15                   Establish module base register
*
         LR    10,0                    Establish addressability
         USING SSCT,10                  to the SSCVT
         LR    11,1                    Establish addressability
         USING SSOB,11                  to the SSOB
*
         GETMAIN R,LV=72               Get working storage
         ST    13,4(1)                 Chain saveareas forward
         ST    1,8(13)                 Chain saveareas backward
         LR    13,1                    Point to this module's savearea
*
************************************************************************
* Validate the request and issue a WTO for message TSYS001             *
************************************************************************
         L     9,SSOBSSIB              Establish addressability
         USING SSIB,9                   to the SSIB
         CLC   SSIBSSNM,SSCTSNAM       Verify the subsystem name
         BNE   ERROR                   This should never happen
         WTO 'TSYS001 - WRITEIT FUNCTION EXECUTED',ROUTCDE=(2)
         L     8,SSOBINDV              Pointer to function dependent
*                                       area
         ST    1,2(8)                  Save message identification
*                                       returned by WTO
         MVC   SSOBRETN,=F'0'          Indicate function success
         B     RETURN
*
ERROR    EQU   *
         MVC   SSOBRETN,=F'4'          Indicate function failure
*
************************************************************************
* Return to the SSI                                                    *
************************************************************************
RETURN   EQU   *
         L     8,4(13)                 Pointer to caller's savearea
         FREEMAIN R,LV=72,A=(13)
         LR    13,8
         LM    14,12,12(13)            Restore caller' registers
         LA    15,0                    RC=0
         BSM   0,14                    Return to the SSI
*
         IEFJSCVT
*
         IEFSSOBH
*
         IEFJSSIB
*
         END
```

Example 3 — Subsystem Function Routine (DELETEIT)

```
DELETEIT CSECT
DELETEIT AMODE  ANY
DELETEIT RMODE  ANY
***********************************************************************
*                                                                     *
*  Function:                                                          *
*                                                                     *
*     This function routine of the TSYS subsystem deletes a WTO.      *
*     The message identifier of the WTO is passed in a function       *
*     dependent area.                                                 *
*                                                                     *
***********************************************************************
*                                                                     *
*  Name of the module:  DELETEIT                                      *
*                                                                     *
*  System macros used:                                                *
*                       DOM                                           *
*                       FREEMAIN                                      *
*                       GETMAIN                                       *
*                       IEFJSCVT                                      *
*                       IEFJSSIB                                      *
*                       IEFSSOBH                                      *
*                                                                     *
*  Base register:  12                                                 *
*                                                                     *
*  Other register use:                                                *
*                  10   SSCVT                                         *
*                  11   SSOB                                          *
*                   9   SSIB                                          *
*                                                                     *
*  Attributes:                                                        *
*     This routine must be reentrant and reside in a library          *
*     accessible at the time subsystem initialization occurs.         *
*                                                                     *
***********************************************************************
*
***********************************************************************
* Chain saveareas                                                     *
***********************************************************************
         USING DELETEIT,12
         SAVE  (14,12)                 Save caller registers
         LR    12,15                   Establish module base register
*
         LR    10,0                    Establish addressability
         USING SSCT,10                  to the SSCVT
         LR    11,1                    Establish addressability
         USING SSOB,11                  to the SSOB
*
         GETMAIN R,LV=72               Get working storage
         ST    13,4(1)                 Chain saveareas foreword
         ST    1,8(13)                 Chain saveareas backward
         LR    13,1                    Point to this module's savearea
*
************************************************************************
* Validate the request and delete the critical eventual action message *
************************************************************************
         L     9,SSOBSSIB              Establish addressability
         USING SSIB,9                   to the SSIB
         CLC   SSIBSSNM,SSCTSNAM       Verify the subsystem name
         BNE   ERROR                   This should never happen
         L     8,SSOBINDV              Pointer to function dependent
*                                       area
         L     1,2(8)                  Get message identification
*                                       returned by WTO
         DOM MSG=(1)
         MVC   SSOBRETN,=F'0'          Indicate function success
         B     RETURN
*
ERROR    EQU   *
         MVC   SSOBRETN,=F'4'          Indicate function failure
*
************************************************************************
* Return to the SSI                                                    *
************************************************************************
RETURN   EQU   *
         L     8,4(13)                 Pointer to caller's savearea
         FREEMAIN R,LV=72,A=(13)
         LR    13,8
         LM    14,12,12(13)            Restore caller' registers
         LA    15,0                    RC=0
         BSM   0,14                    Return to the SSI
*
         IEFJSCVT
*
         IEFSSOBH
*
         IEFJSSIB
*
         END
```

Example 4 — Subsystem Function Routine (LISTEN)

```
LISTEN   CSECT
LISTEN   AMODE ANY
LISTEN   RMODE ANY
************************************************************************
*                                                                      *
*  Function:                                                           *
*                                                                      *
*     This function routine of the TSYS subsystem is invoked by the    *
*     SSI broadcast of WTO.  When it detects the WTO message issued    *
*     by the WRITEIT routine, it alters the attributes of the WTO to   *
*     be a non-rollable message.                                       *
*                                                                      *
************************************************************************
*                                                                      *
*  Name of the module:  LISTEN                                         *
*                                                                      *
*  System macros used:                                                 *
*                       FREEMAIN                                       *
*                       GETMAIN                                        *
*                       IEFJSSOB                                       *
*                       IHAWQE                                         *
*                                                                     *
*  Base register:  12                                                 *
*                                                                     *
*  Other register use:                                                *
*                 10   SSOB                                           *
*                 11   SSOBEXT                                        *
*                  9   WQE                                            *
*                                                                     *
*  Attributes:                                                        *
*     This routine must be reentrant and reside in a library          *
*     accessible at the time subsystem initialization occurs.         *
*                                                                     *
***********************************************************************
*
***********************************************************************
* Chain saveareas                                                     *
***********************************************************************
         USING LISTEN,12
         SAVE  (14,12)                Save caller registers
         LR    12,15                  Establish module base register
*
         LR    10,1                   Establish addressability
         USING SSOB,10                 to the SSOB
*
         GETMAIN R,LV=72              Get working storage
         ST    13,4(1)                Chain saveareas foreword
         ST    1,8(13)                Chain saveareas backward
         LR    13,1                   Point to this module's savearea
*
***********************************************************************
* Alter message number TSYS001 to be a critical eventual action       *
* message (descriptor code of 11)                                     *
***********************************************************************
         L     11,SSOBINDV            Chain through
         USING SSOBEXT,11              the SSWT to
         L     9,SSWTWQE               establish addressability
         USING WQE,9                   to the WQE
         CLC   WQETXT+2(8),=C'TSYS001 ' Check for desired message
         BNE   MSGDONE
         TM    WQEDC2,WQEDCK          Check for DESC(11) already set
         BO    MSGDONE
         OI    WQEDC2,WQEDCK          Alter message to be DESC(11)
         OI    WQEML1,WQEMLCE          and eventual critical
         OI    WQEMCSF1,WQEMCSA       Indicate descriptor codes
*                                      present
         MVC   SSOBRETN,=F'4'         Indicate function recognized
*                                      request, and processed it
         B     RETURN
*
MSGDONE  EQU   *
         MVC   SSOBRETN,=F'0'         Indicate function recognized
*                                      request, but did not care
*
***********************************************************************
* Return to the SSI                                                   *
***********************************************************************
RETURN   EQU   *
         L     8,4(13)                Pointer to caller's savearea
         FREEMAIN R,LV=72,A=(13)
         LR    13,8
         LM    14,12,12(13)           Restore the caller's registers
         LA    15,0                   RC=0
         BSM   0,14                   Return
*
*
         IEFJSSOB (WT),CONTIG=NO
```

```
*
         IHAWQE
*
         END
```

Example 5 — Subsystem Requesting Routine (TSYSCALL)

```
TSYSCALL CSECT
TSYSCALL AMODE ANY
TSYSCALL RMODE ANY
*********************************************************************
*                                                                   *
*  Function:                                                        *
*                                                                   *
*     This routine runs as a problem program and invokes the TSYS   *
*     subsystem.  It requests the SSI to invoke the WRITEIT function *
*     to issue its WTO.  Ten seconds later it requests the SSI to   *
*     invoke the DELETEIT function to delete the WTO.               *
*                                                                   *
*     For the WTO to be broadcast to all subsystems, this routine   *
*     must be run SUB=MSTR.                                         *
*                                                                   *
*********************************************************************
*                                                                   *
*  Name of the module:  TSYSCALL                                    *
*                                                                   *
*  System macros used:                                              *
*                       ABEND                                       *
*                       CVT                                         *
*                       IEFJESCT                                    *
*                       IEFJSSIB                                    *
*                       IEFSSOBH                                    *
*                       IEFSSREQ                                    *
*                       RETURN                                      *
*                       STIMER                                      *
*                                                                   *
*  Base register:  12                                               *
*                                                                   *
*  Other register use:                                              *
*                  10   SSOB                                        *
*                  11   SSIB                                        *
*                                                                   *
*  Attributes:                                                      *
*     None                                                          *
*                                                                   *
*********************************************************************

*
*********************************************************************
* Chain saveareas                                                   *
*********************************************************************
         USING TSYSCALL,12
         SAVE  (14,12)                Save caller registers
         LR    12,15                  Establish module base register
         LR    1,13
         LA    13,SAVEAREA            Point to this module's savearea
         ST    13,8(1)                Chain saveareas foreword
         ST    1,SAVEAREA+4           Chain saveareas backward
*
         LA    10,SSOBD               Establish addressability
         USING SSOB,10                 to the SSOB
         LA    11,SSIBD               Establish addressability
         USING SSIB,11                 to the SSIB
*
*********************************************************************
```

```
* Format the SSOB                                                       *
*************************************************************************
         MVC   SSOBID,=C'SSOB'         Set control block identifier
         LA    8,SSOBHSIZ
         STH   8,SSOBLEN               Set control block size
         ST    11,SSOBSSIB             Set pointer to SSIB
         MVC   SSOBINDV,=A(MSGIDEXT)   Set pointer to function
*                                       dependent area
*
*************************************************************************
* Format the SSIB                                                       *
*************************************************************************
         MVC   SSIBID,=C'SSIB'         Set control block identifier
         LA    8,SSIBSIZE
         STH   8,SSIBLEN               Set control block size
         MVC   SSIBSSNM,=C'TSYS'       Set subsystem name
*
*************************************************************************
* Call the TSYS subsystem                                               *
*************************************************************************
         MVC   SSOBFUNC,WRITEIT        Request the TSYS001 WTO message
         OI    PARMLST,X'80'           Mark end of parameter list
         LA    1,PARMLST               Point to the parameter list
         IEFSSREQ
         LTR   15,15                   Check return code from SSI
         BNZ   ERROR
         CLC   SSOBRETN,=F'0'          Check return code from subsystem
         BNZ   ERROR
*
         STIMER WAIT,BINTVL=TENSEC

*
         MVC   SSOBFUNC,DELETEIT       Request DOM of the TSYS001 WTO
*                                       message
         LA    1,PARMLST               Point to the parameter list
         IEFSSREQ
         LTR   15,15                   Check return code from SSI
         BNZ   ERROR
         CLC   SSOBRETN,=F'0'          Check return code from subsystem
         BNZ   ERROR
         B     RETURN
*
ERROR    EQU   *
         ABEND 1001,,,USER             Indicate function failure
*
*************************************************************************
* Restore registers and return                                          *
*************************************************************************
RETURN   EQU   *
         L     13,SAVEAREA+4           Pointer to caller's savearea
         RETURN (14,12),RC=0
*
*
TENSEC   DC    F'1000'                 Ten seconds in 1/100ths
WRITEIT  DC    H'254'
DELETEIT DC    H'255'
*
SAVEAREA DC    18F'0'
*
PARMLST  DC    A(SSOBD)                IEFSSREQ parameter list
*
SSOBD    DS    0F                      SSOB data
         DC    (SSOBHSIZ)X'00'
*
MSGIDEXT DS    0F                      Function dependent area
MSGIDLEN DC    AL2(MSGIDSIZ)
MSGIDENT DC    F'0'                    Message identifier from TFUNC1
MSGIDSIZ EQU   *-MSGIDEXT
```

```
*
SSIBD    DS    0F                     SSIB data
         DC    (SSIBSIZE)X'00'
*
         IEFSSOBH
*
         IEFJSSIB
*
         CVT DSECT=YES
*
         IEFJESCT
*
         END
```

Chapter 9. Using IEFJSVEC with Your Subsystem

This appendix describes using the IEFJSVEC service to help build and use your subsystems when performing the following tasks:

- Defining what your subsystem can do:
  - Building your subsystem's SSVT
- Changing what your subsystem can do:
  - Enabling your subsystem for new functions
  - Disabling previously supported functions

IBM recommends that you use the dynamic SSI services that are described in Chapter 5, "Services for Building and Using Your Subsystem," on page 471 instead of using IEFJSVEC. The dynamic SSI services provide new capabilities and are easier to use.

Defining What Your Subsystem Can Do

To define what your subsystem can do, you can use IEFJSVEC to build an SSVT for your subsystem.

Building the SSVT

The IEFJSVEC service allows you to build an SSVT for your subsystem.

When preparing to build your subsystem's SSVT, consider:

- When you want to invoke IEFJSVEC. You can invoke IEFJSVEC either through a subsystem initialization routine specified in parmlib member IEFSSNxx or through a subsystem routine invoked during START command processing, as described under "Providing a Routine to Initialize Your Subsystem" on page 466.
- Which common storage subpool your subsystem's SSVT is to be built in. Note that the system uses the mode and key of the caller to access the SSVT and invoke the function routines. Therefore, the storage subpool specified for the SSVT must be a common subpool. See *z/OS MVS Programming: Authorized Assembler Services Guide* for more information on selecting a common storage subpool.
- What are the maximum number of function routines you expect the subsystem to need. The maximum number of function routines you specify applies to the function routines you define on this build request, and also to any function routines that you define on the enable function or disable function of the IEFJSVEC service.
- What are the actual number of function routines you want to specify on the current request.
- What is the name of each function routine and the function code it supports.
- Where the subsystem function routines are to reside. See "Placement of Function Routines" on page 463 for more information.

Environment

The following mapping macros are supplied by IBM and may be included in your program when invoking IEFJSVEC:

- IEFVTSPL

© Copyright IBM Corp. 1988, 2013

- IEFJSBVT

The requirements for the caller of IEFJSVEC are:

Requirements for the caller of IEFJSVEC

Variable	Value
Minimum Authorization	Supervisor state with any PSW key
Dispatchable unit mode	Task
AMODE	24-bit
Cross memory mode	PASN=HASN=SASN
ASC mode	Primary
Interrupt status	Enabled for I/O and external interrupts
Locks	No locks held
Control Parameters	The VTSPL and JSBVT control blocks must reside in storage below 16 megabytes.
Recovery	The caller of IEFJSVEC should provide an ESTAE-type of recovery environment. See *z/OS MVS Programming: Authorized Assembler Services Guide* for more information on an ESTAE-type of recovery environment.

Input Register Information

Before invoking the IEFJSVEC service, you must ensure that the following general purpose registers contain:

Register	**Contents**
1	Address of fullword that contains the address of the subsystem VTSPL
13	Address of a standard 18-word save area
14	Return address

Input Parameters

Input parameters for the IEFJSVEC service are:

- VTSPL
- JSBVT — both fixed and variable sections

VTSPL Contents: Your program sets the following fields in the VTSPL control block on input:

Field Name
Description

VTSID
Identifier 'VTSP'

VTSLEN
Length of the VTSPL (VTSSIZE) control block

VTSVER
Version number of the VTSPL (VTSCVER) control block

VTSCONID
The 1-byte console ID of the console that the subsystem initialization routine issues messages to. If your program sets this field to zero, the VTSCNSID field is used.

This field exists for versions of MVS previous to SP410. IBM recommends that you specify a 4-byte console ID as defined by the VTSCNSID field.

VTSFLAGS

Flags

- **VTSGLOAD** — load-to-global indicator.

  To eliminate the need to have subsystem function routines reside in LPA, the subsystem can request that IEFJSVEC issue a load-to-global for those function routines by setting the VTSGLOAD indicator. If load-to-global is used for the subsystem function routines, the function routines are loaded into pageable CSA and the loaded routines are associated with the requesting task. When the task ends, the module's use count is reduced by the number of outstanding LOADs. When the module's use count reaches zero, the module is deleted, leaving an invalid function routine address in the SSVT. Therefore, the load-to-global option should only be used by programs running under a task that never ends. For example, if IEFJSVEC is invoked by the subsystem initialization routine which is given control out of early system initialization (that is, those subsystem initialization routines specified in IEFSSNxx parmlib members) the requesting task is the master scheduler, which never goes away.

  If you set the load-to-global indicator, all function routines which are specified on a single request to IEFJSVEC are loaded into pageable CSA. If you want to have some function routines loaded into CSA and others that are not, issue separate invocations of IEFJSVEC, one with the VTSGLOAD indicator set and the other with the VTSGLOAD indicator not set. Because your subsystem can only have one SSVT, for subsequent calls to IEFJSVEC, you need to use the enable function code request option available through the IEFJSVEC service. See “Enabling Your Subsystem for New Functions” on page 580 for more information.

VTSREQ

Request flags — defines the operation that this call performs

- **VTSCREAT** — SSVT build indicator

VTSNAME

Subsystem name. The name of the subsystem for which the SSVT is being built. The subsystem name can be up to four characters. It must be left-justified and padded to the right with blank (X'40') characters.

VTSSVTD

Address of SSVT table data (mapped by IEFJSBVT)

VTSCNSID

4-byte console ID that the SSI uses for any messages issued on this invocation of IEFJSVEC. If this field is set to zero, the messages go to the master console.

Provide a CART and a console ID if IEFJSVEC is invoked while running under a command processor. For example, if a subsystem is initialized through START command processing. See *z/OS MVS Programming: Authorized Assembler Services Guide* for information on how to obtain the CART and console ID from the command input buffer (CIB) control block.

VTSCART

Command and response token (CART). If a CART is provided, the SSI uses it for any messages it issues for this invocation of IEFJSVEC.

Set all other fields in the VTSPL control block to binary zeros.

JSBVT Contents — Fixed Header Section: Your program sets the following fields in the JSBVT control block on input:

Field Name
Description

JSBID Identifier 'JSBV'

JSBLEN
Length of the JSBVT (fixed header section) control block

JSBVERS
Version number of the JSBVT (JSBCVERS) control block

JSBFUN
Number of function routines specified in this table of data

JSBSPL
Subpool number from which the SSVT is to be built. Note that the system uses the mode and key of the caller to access the SSVT and invoke the function routines.

JSBMAXFR
Maximum number of function routines you expect the subsystem to need

Set all other fields in the fixed header section of the JSBVT control block to binary zeros.

JSBVT Contents — Variable Length Section: The JSBVT fixed header is followed by a variable length function routine data area (one for each function routine). Your program sets the following fields on input:

Field Name
Description

JSBLGTH
Length of this function routine's data area and function code area (also see JSBFCOD)

JSBNME
Name of the function routine. The function routine name can be up to eight characters. It must be left-justified and padded to the right with blank (X'40') characters.

JSBNUM
Number of function codes the function routine supports

JSBVT Contents — Variable Length Section: The function routine data area is follow by a variable length function code area (one for each function routine). Your program sets the following fields on input:

Field Name
Description

JSBFCOD
Function code (repeat if more than one function code is supported by the same function routine). The value specified for each function code must be in the range 1-255.

Output Register Information

When control returns to caller of the IEFJSVEC service, the general purpose registers contain:

Register	Contents
0-14	Same as on entry to call
15	Return code

Return Code Information

IEFJSVEC returns one of the following return codes in register 15:

Return Code (Decimal)
Meaning

VTSSUCES (0)
Successful completion. The request to build an SSVT was successfully processed.

VTSINVID (4)
An incorrect identifier was specified in VTSPL or JSBVT. Check the input parameter areas to make sure that you specified the proper identifiers, and that the pointers to the input parameter areas are properly defined.

VTSINVIN (8)
An incorrect subsystem name was specified. Check to make sure that you specified a valid subsystem name in the VTSNAME field. Consult with your system programmer to make sure that it matches the name of a valid subsystem defined in the IEFSSNxx parmlib member that is currently in use.

VTSGETFL (12)
Unable to obtain storage for the SSVT. Consult with your system programmer to verify that sufficient storage is available for the subpool specified in the JSBSPL field.

VTSLOGER (16)
Logic error. Contact your IBM service support center.

VTSLOADF (20)
An abend occurred when trying to load the function routine. The VTSFUNCT field contains the name of the function routine being loaded when the problem occurred.

VTSINVBI (24)
An incorrect bit was set in the request flags. Verify that you have set only the VTSCREAT indicator and that you have not set any other bits in the VTSREQ flag byte.

VTSINCR (28)
Unable to process the SSVT build request. The SSVT already exists. Verify that you have specified the correct subsystem name for which an SSVT is to be built. Also ensure that your subsystem initialization code is not accidentally attempting to build an SSVT twice for the same subsystem (specified in VTSNAME).

Output Parameters

Output parameters for the IEFJSVEC service are:

- VTSPL

VTSPL Contents: The VTSPL control block contains the following information upon return from your build SSVT request:

Field Name	Description
VTSSVTAD	Address of the SSVT, if the SSVT build request was successful (Register 15=0)
VTSSSCVT	Address of the SSCVT, if the SSVT build request was successful (Register 15=0)
VTSFUNCT	Name of the function routine processed, if an error occurred when trying to load a function routine (Register 15=20)

Changing What Your Subsystem Can Do

To change what your subsystem can do, you can use IEFJSVEC to:

- Enable your subsystem for new functions
- Disable a previously supported function

Enabling Your Subsystem for New Functions

You can use the enable function of the IEFJSVEC service to:

- Dynamically add one or more function codes to an existing function routine. This function routine might have been specified on the original build SSVT request or might have been added by a previous enable request.

  When preparing to enable additional function codes, consider:

  - When you will invoke IEFJSVEC.

    If you are invoking IEFJSVEC while running under a command processor, for example, from a subsystem routine invoked during START command processing, provide a console ID and CART, as described in “Input Parameters” on page 581.
  - Which existing function routines will support which additional function codes.
- Dynamically add one or more new function routines, and, for each function routine, one or more function codes that the function routine is to support.

  When preparing to enable additional function routines and function codes, consider the following:

  - When you will be invoking IEFJSVEC.

    If you are invoking IEFJSVEC while running under a command processor, for example, from a subsystem routine invoked during START command processing, then provide a console ID and CART, as described in “Input Parameters” on page 581.
  - What are the actual number of function routines your subsystem currently supports and is it less the maximum number allowed.

    To dynamically add more function routines to your subsystem, the actual number of function routines your subsystem currently supports must be less than the maximum number of function routines that was specified when your subsystem's SSVT was built. See the description for the JSBMAXFR field in “Building the SSVT” on page 575.
  - What is the name of each additional function routine and the function codes it is to support.

- Where your subsystem function routines are to reside. See Chapter 4, "Setting Up Your Subsystem," on page 461 for more information on where your function routines can reside.

Environment

The following mapping macros are supplied by IBM and may be included in your program when invoking IEFJSVEC:

- IEFVTSPL
- IEFJSBVT

The requirements for the caller of IEFJSVEC are:

Variable	Value
Minimum Authorization	Supervisor state with any PSW key
Dispatchable unit mode	Task
AMODE	24-bit
Control Parameters	The VTSPL and JSBVT control blocks must reside in storage below 16 megabytes.
Cross memory mode	PASN=HASN=SASN
ASC mode	Primary
Interrupt status	Enabled for I/O and external interrupts
Locks	No locks held
Recovery	The caller of IEFJSVEC should provide an ESTAE-type of recovery environment. See *z/OS MVS Programming: Authorized Assembler Services Guide* for more information on an ESTAE-type of recovery environment.

Restrictions

The number of function routines supported by a subsystem must not exceed 255.

Input Register Information

Before you invoke IEFJSVEC, you must ensure that the following general purpose registers contain:

Register	Contents
1	Address of fullword that contains the address of the subsystem VTSPL
13	Address of a standard 18-word save area
14	Return address

Input Parameters

Input parameter areas for the IEFJSVEC service are:

- VTSPL
- JSBVT — both fixed and variable sections

VTSPL Contents: Your program must set the following fields in the VTSPL control block on input:

Field Name	Description
VTSID	Identifier 'VTSP'
VTSLEN	Length of the VTSPL (VTSSIZE) control block

VTSVER
Version number of the VTSPL (VTSCVER) control block

VTSCONID
The 1-byte console ID of the console that the subsystem initialization routine issues messages to. If your program sets this field to zero, the VTSCNSID field is used.

This field exists for versions of MVS previous to SP410. IBM recommends that you specify a 4-byte console ID as defined by the VTSCNSID field.

VTSFLAGS
Flags

- **VTSGLOAD —** load-to-global indicator.

  This indicator applies only when you are adding new function routines to your subsystem and does not apply when you are adding new function codes to an existing function routine. If the VTSGLOAD indicator is set, the SSI loads all of the function routines into pageable CSA. Each loaded routine is associated with the task under which the call to IEFJSVEC was made. The VTSGLOAD indicator applies to all function routines specified on a single invocation of IEFJSVEC.

  Only use the VTSGLOAD indicator when invoking the enable function under a system address space that does not end. If the subsystem invokes the enable function from its own address space or task, those routines are deleted from CSA when the task ends, causing invalid function routine addresses in the SSVT. IBM recommends that you use the VTSGLOAD indicator only when invoking IEFJSVEC from an initialization routine named in IEFSSNxx. Subsystems initialized through START commands should ensure that the function routines are in commonly addressable storage, that is, in the link pack area (LPA, MLPA, FLPA).

  If you want to have some function routines that are loaded into CSA and others that are not, issue separate invocations of IEFJSVEC, one with the VTSGLOAD indicator set and the other with the VTSGLOAD indicator not set. You may use the SSVT build function for one of the requests, if an SSVT does not already exist. However, for any subsequent calls you will need to use the enable function.

  See “Placement of Function Routines” on page 463 to determine whether the load-to-global indicator should be used.

VTSREQ
Request flags - defines the operation that this call performs

- **VTSFCEN —** Enable indicator

VTSNAME
Subsystem name. The name of the subsystem for which additional function codes or function routines are to be added. The subsystem name can be up to four characters. It must be left-justified and padded to the right with blank (X'40') characters.

VTSSVTD
Address of SSVT table data (see JSBVT content)

VTSCNSID
4-byte console ID that the SSI uses for any messages issued on this invocation of IEFJSVEC. If this field is set to zero, the messages go to the master console.

Provide a CART and a console ID if IEFJSVEC is invoked while running under a command processor. For example, if a subsystem is initialized through START command processing. See *z/OS MVS Programming: Authorized Assembler Services Guide* for information on how to obtain the CART and console ID from the command input buffer (CIB) control block.

When IEFJSVEC is invoked during early system initialization, that is, the subsystem is initialized through an initialization routine specified in the IEFSSNxx parmlib member, set the VTSCNSID field to zero.

VTSCART
Command and response token (CART). If a CART is provided, the SSI uses it for any messages it issues for this invocation of IEFJSVEC.

Provide a CART and a console ID when IEFJSVEC is invoked while running under a command processor, as when a subsystem is initialized through START command processing. See *z/OS MVS Programming: Authorized Assembler Services Guide* for information on how to obtain the CART and console ID from the command input buffer (CIB) control block.

Set the VTSCART field to zero when IEFJSVEC is invoked during early system initialization, that is, when the subsystem is initialized through an initialization routine specified in an IEFSSNxx parmlib member.

All other fields in the VTSPL control block must be set to binary zeros.

JSBVT Contents — Fixed Header Section: Your program must set the following fields in the JSBVT control block on input:

Field Name	Description
JSBID	Identifier 'JSBV'
JSBLEN	Length of the JSBVT (fixed header section) control block
JSBVERS	Version number of the JSBVT (JSBCVERS) control block
JSBFUN	Number of function routines specified in this table of data

All other fields in the fixed header section of the JSBVT control block must be set to binary zeros.

JSBVT Contents — Variable Length Section: The JSBVT fixed header is followed by a variable length function routine data area (one for each function routine). Your program must set the following fields on input:

Field Name	Description
JSBLGTH	Length of this function routine's data area and its function code area (see the JSBFCOD field)
JSBNME	Name of a function routine. The function routine name specified should be either the name of a new function routine to be supported by the subsystem or the name of an existing function routine to which additional

function codes are to be added. The function routine name can be up to eight characters. It must be left-justified and padded to the right with blank (X'40') characters.

JSBNUM
Number of function codes specified for this function routine.

If this enable request is being used to add a new function routine to a subsystem or is being used to add new function codes to an existing function routine, the JSBNUM field should be set to the number of new function codes to be supported by the function routine as specified in the JSBFCOD field on this invocation of IEFJSVEC.

JSBVT Contents — Variable Length Section: The function routine data area is follow by a variable length function code area (one for each function routine). Your program must set the following field on input:

Field Name	Description
JSBFCOD	Function code(s) (repeat if more than one function code is supported by the same function routine). The value specified for each function code, must be in the range 1-255.

Output Register Information

When control returns to caller of IEFJSVEC, the general purpose registers contain:

Register	Contents
0 — 14	Same as on entry to call
15	Return code

Return Code Information

IEFJSVEC returns one of the following return codes in register 15:

Return Code (Decimal)	Meaning
VTSSUCES (0)	Successful completion. The request to enable was successfully processed and the SSVT has been updated.
VTSINVID (4)	An incorrect identifier was specified in VTSPL or JSBVT. Check the input parameter areas to make sure that you specified the proper identifiers, and that the pointers to the input parameter areas are properly defined.
VTSINVIN (8)	An incorrect subsystem name was specified. Check to make sure that you specified a valid subsystem name in the VTSNAME field. Consult with your system programmer to make sure that it matches the name of a valid subsystem defined in the IEFSSNxx parmlib member that is currently in use.
VTSLOGER (16)	Logic error. Contact your IBM service support center.

VTSLOADF (20)
An abend occurred when trying to load the function routine. The VTSFUNCT field contains the name of the function routine being loaded when the problem occurred.

VTSINVBI (24)
An incorrect bit was set in the request flags. Verify that you have set only the VTSFCEN indicator and that you have not set any other bits in the VTSREQ flag byte.

VTSINVED (32)
Unable to process enable request; no SSVT found. Verify that you specified a valid subsystem name in the VTSNAME field. If the subsystem name is valid, make sure that the subsystem's SSVT has been built and is properly pointed to from your subsystem's SSCVT prior to any IEFJSVEC enable calls being made.

VTSNOSPA (36)
Unable to process enable request; insufficient space in the SSVT for additional function routine addresses. The VTSFUNC field contains the name of the function routine being loaded when the problem occurred. The maximum number of function routines which can be supported by your subsystem has been exceeded. Increase the maximum allowed on your build SSVT by increasing JSBMAXFR.

VTSSIVT (40)
Target vector table is SSI-managed and can only be updated through the IEFSSVT macro.

VTSNOSUB (44)
Target Subsystem does not exist.

Output Parameters

Output parameters for the IEFJSVEC service are:

- VTSPL

VTSPL Contents: The VTSPL control block contains the following information upon return from your enable request:

Field Name	Description
VTSSSCVT	Address of the SSCVT, if the enable request was successful (Register 15=0)
VTSFUNCT	Name of the function routine being processed, if an error occurred when trying to load a function routine (Register 15=20 or Register 15=36)

Disabling Previously Supported Functions

You can use the disable function of the IEFJSVEC service to dynamically disable a function code so that your subsystem no longer gets control for that function. Disabling a function is in effect a "logical delete."

Attention: Because there is no serialization on updating the table in the SSVT, other requests for the supported functions might be coming in asynchronously. Therefore, it is important to not remove the function routines from storage.

When preparing to disable one or more function codes, consider:

- When you will be invoking IEFJSVEC

  If you are invoking IEFJSVEC while running under a command processor, for example, from a subsystem routine invoked during START command processing, then a console ID and CART should be provided, as described in "Input Parameters."
- Which of the existing function codes are no longer supported.

Environment

The following mapping macros are supplied by IBM and may be included in your program when invoking IEFJSVEC:

- IEFVTSPL
- IEFJSBVT

The requirements for the caller of IEFJSVEC are:

Variable	**Value**
Minimum Authorization	Supervisor state with any PSW key
Dispatchable unit mode	Task
AMODE	24-bit
Control Parameters	The VTSPL and JSBVT control blocks must reside in storage below 16 megabytes.
Cross memory mode	PASN=HASN=SASN
ASC mode	Primary
Interrupt status	Enabled for I/O and external interrupts
Locks	No locks held
Recovery	The caller of IEFJSVEC should provide an ESTAE-type of recovery environment. See *z/OS MVS Programming: Authorized Assembler Services Guide* for more information on an ESTAE-type of recovery environment.

Input Register Information

Before you invoke IEFJSVEC, you must ensure that the following general purpose registers contain:

Register	**Contents**
1	Address of fullword that contains the address of the subsystem VTSPL
13	Address of a standard 18-word save area
14	Return address

Input Parameters

Input parameter areas for the IEFJSVEC service are:

- VTSPL
- JSBVT — both fixed and variable sections

VTSPL Contents: Your program must set the following fields in the VTSPL control block on input:

Field Name	**Description**
VTSID	Identifier 'VTSP'

VTSLEN
Length of the VTSPL (VTSSIZE) control block

VTSVER
Version number of the VTSPL (VTSCVER) control block

VTSCONID
The 1-byte console ID of the console that the subsystem initialization routine issues messages to. If your program sets this field to zero, the VTSCNSID field is used.

This field exists for versions of MVS previous to SP410. IBM recommends that you specify a 4-byte console ID as defined by the VTSCNSID field.

VTSREQ
Request flags - defines the operation that this call performs

- **VTSFCDIS** — Disable indicator

VTSNAME
Subsystem name. The name of the subsystem for which one or more function codes are to be disabled. The subsystem name can be up to four characters. It must be left-justified and padded to the right with blank (X'40') characters.

VTSSVTD
Address of SSVT table data (see JSBVT contents)

VTSCNSID
4-byte console ID that the SSI uses for any messages issued on this invocation of IEFJSVEC. If this field is set to zero, the messages go to the master console.

Provide a CART and a console ID if IEFJSVEC is invoked while running under a command processor. For example, if a subsystem is initialized through START command processing. See *z/OS MVS Programming: Authorized Assembler Services Guide* for information on how to obtain the CART and console ID from the command input buffer (CIB) control block.

When IEFJSVEC is invoked during early system initialization, that is, the subsystem is initialized through an initialization routine specified in the IEFSSNxx parmlib member, set the VTSCNSID field to zero.

VTSCART
Command and response token (CART). If a CART is provided, the SSI uses it for any messages it issues for this invocation of IEFJSVEC.

Provide a CART and a console ID when IEFJSVEC is invoked while running under a command processor, as when a subsystem is initialized through START command processing. See *z/OS MVS Programming: Authorized Assembler Services Guide* for information on how to obtain the CART and console ID from the command input buffer (CIB) control block.

Set the VTSCART field to zero when IEFJSVEC is invoked during early system initialization, that is, when the subsystem is initialized through an initialization routine specified in an IEFSSNxx parmlib member.

All other fields in the VTSPL control block must be set to binary zeros.

JSBVT Contents — Fixed Header Section: Your program must set the following fields in the JSBVT control block on input:

Field Name	Description
JSBID	Identifier 'JSBV'
JSBLEN	Length of fixed header section
JSBVERS	Version number (JSBCVERS)
JSBFUN	Number of function routines specified in this table of data

All other fields in the fixed header section of the JSBVT control block must be set to binary zeros.

JSBVT Contents — Variable Length Section: The JSBVT fixed header is followed by a variable length function routine data area (one for each function routine). Your program must set the following fields on input:

Field Name	Description
JSBLGTH	Length of this function routine's data area and it's function code area (see the JSBFCOD field)
JSBNME	Name of a function routine. The function routine name can be up to eight characters. It must be left-justified and padded to the right with blank (X'40') characters.
JSBNUM	Number of function codes The JSBNUM field should be set to the number of function codes which are to be disabled for this function routine as specified in the JSBFCOD field on this invocation of IEFJSVEC.

JSBVT Contents — Variable Length Section: The function routine data area is followed by a variable length function code area (one for each function routine). Your program must set the following field on input:

Field Name	Description
JSBFCOD	Function code (repeat if more than one function code is to be disabled). The value specified for each function code, must be in the range 1-255.

Output Register Information

When control returns to caller of IEFJSVEC, the general purpose registers contain:

Register	Contents
0 — 14	Same as on entry to call
15	Return code

Return Code Information

IEFJSVEC returns one of the following return codes in register 15:

Return Code

(Decimal)
Meaning

VTSSUCES (0)
Successful completion. The request to disable was successfully processed and the SSVT has been updated.

VTSINVID (4)
An incorrect identifier was specified in VTSPL or JSBVT. Check the input parameter areas to make sure that you specified the proper identifiers, and that the pointers to the input parameter areas are properly defined.

VTSINVIN (8)
An incorrect subsystem name was specified. Check to make sure that you specified a valid subsystem name in the VTSNAME field. Consult with your system programmer to make sure that it matches the name of a valid subsystem defined in the IEFSSNxx parmlib member that is currently in use.

VTSLOGER (16)
Logic error. Contact your IBM service support center.

VTSINVBI (24)
An incorrect bit was set in the request flags. Verify that you have set only the VTSFCDIS indicator and that you have not set any other bits in the VTSREQ flag byte.

VTSINVED (32)
Unable to process disable request; no SSVT found. Verify that you specified a valid subsystem name in the VTSNAME field. If the subsystem name is valid, make sure that the subsystem's SSVT has been built and is properly pointed to from your subsystem's SSCVT prior to any IEFJSVEC disable calls being made.

Output Parameters

Output parameters for the IEFJSVEC service are:

- VTSPL

VTSPL Contents: The VTSPL control block contains the following information upon return from your disable request:

Field Name
Description

VTSSSCVT
Address of the SSCVT, if the disable request was successful (Register 15=0)

Appendix. Accessibility

Accessible publications for this product are offered through the z/OS Information Center, which is available at www.ibm.com/systems/z/os/zos/bkserv/.

If you experience difficulty with the accessibility of any z/OS information, please send a detailed message to mhvrcfs@us.ibm.com or to the following mailing address:
IBM Corporation
Attention: MHVRCFS Reader Comments
Department H6MA, Building 707
2455 South Road
Poughkeepsie, NY 12601-5400
USA

Accessibility features

Accessibility features help a user who has a physical disability, such as restricted mobility or limited vision, to use software products successfully. The major accessibility features in z/OS enable users to:

- Use assistive technologies such as screen readers and screen magnifier software
- Operate specific or equivalent features using only the keyboard
- Customize display attributes such as color, contrast, and font size.

Using assistive technologies

Assistive technology products, such as screen readers, function with the user interfaces found in z/OS. Consult the assistive technology documentation for specific information when using such products to access z/OS interfaces.

Keyboard navigation of the user interface

Users can access z/OS user interfaces using TSO/E or ISPF. Refer to *z/OS TSO/E Primer*, *z/OS TSO/E User's Guide*, and *z/OS ISPF User's Guide Vol I* for information about accessing TSO/E and ISPF interfaces. These guides describe how to use TSO/E and ISPF, including the use of keyboard shortcuts or function keys (PF keys). Each guide includes the default settings for the PF keys and explains how to modify their functions.

Dotted decimal syntax diagrams

Syntax diagrams are provided in dotted decimal format for users accessing the z/OS Information Center using a screen reader. In dotted decimal format, each syntax element is written on a separate line. If two or more syntax elements are always present together (or always absent together), they can appear on the same line, because they can be considered as a single compound syntax element.

Each line starts with a dotted decimal number; for example, 3 or 3.1 or 3.1.1. To hear these numbers correctly, make sure that your screen reader is set to read out punctuation. All the syntax elements that have the same dotted decimal number (for example, all the syntax elements that have the number 3.1) are mutually

© Copyright IBM Corp. 1988, 2013

exclusive alternatives. If you hear the lines 3.1 USERID and 3.1 SYSTEMID, you know that your syntax can include either USERID or SYSTEMID, but not both.

The dotted decimal numbering level denotes the level of nesting. For example, if a syntax element with dotted decimal number 3 is followed by a series of syntax elements with dotted decimal number 3.1, all the syntax elements numbered 3.1 are subordinate to the syntax element numbered 3.

Certain words and symbols are used next to the dotted decimal numbers to add information about the syntax elements. Occasionally, these words and symbols might occur at the beginning of the element itself. For ease of identification, if the word or symbol is a part of the syntax element, it is preceded by the backslash (\) character. The * symbol can be used next to a dotted decimal number to indicate that the syntax element repeats. For example, syntax element *FILE with dotted decimal number 3 is given the format 3 * FILE. Format 3* FILE indicates that syntax element FILE repeats. Format 3* * FILE indicates that syntax element * FILE repeats.

Characters such as commas, which are used to separate a string of syntax elements, are shown in the syntax just before the items they separate. These characters can appear on the same line as each item, or on a separate line with the same dotted decimal number as the relevant items. The line can also show another symbol giving information about the syntax elements. For example, the lines 5.1*, 5.1 LASTRUN, and 5.1 DELETE mean that if you use more than one of the LASTRUN and DELETE syntax elements, the elements must be separated by a comma. If no separator is given, assume that you use a blank to separate each syntax element.

If a syntax element is preceded by the % symbol, this indicates a reference that is defined elsewhere. The string following the % symbol is the name of a syntax fragment rather than a literal. For example, the line 2.1 %OP1 means that you should refer to separate syntax fragment OP1.

The following words and symbols are used next to the dotted decimal numbers:

- ? means an optional syntax element. A dotted decimal number followed by the ? symbol indicates that all the syntax elements with a corresponding dotted decimal number, and any subordinate syntax elements, are optional. If there is only one syntax element with a dotted decimal number, the ? symbol is displayed on the same line as the syntax element, (for example 5? NOTIFY). If there is more than one syntax element with a dotted decimal number, the ? symbol is displayed on a line by itself, followed by the syntax elements that are optional. For example, if you hear the lines 5 ?, 5 NOTIFY, and 5 UPDATE, you know that syntax elements NOTIFY and UPDATE are optional; that is, you can choose one or none of them. The ? symbol is equivalent to a bypass line in a railroad diagram.
- ! means a default syntax element. A dotted decimal number followed by the ! symbol and a syntax element indicates that the syntax element is the default option for all syntax elements that share the same dotted decimal number. Only one of the syntax elements that share the same dotted decimal number can specify a ! symbol. For example, if you hear the lines 2? FILE, 2.1! (KEEP), and 2.1 (DELETE), you know that (KEEP) is the default option for the FILE keyword. In this example, if you include the FILE keyword but do not specify an option, default option KEEP will be applied. A default option also applies to the next higher dotted decimal number. In this example, if the FILE keyword is omitted, default FILE(KEEP) is used. However, if you hear the lines 2? FILE, 2.1, 2.1.1!

(KEEP), and 2.1.1 (DELETE), the default option KEEP only applies to the next higher dotted decimal number, 2.1 (which does not have an associated keyword), and does not apply to 2? FILE. Nothing is used if the keyword FILE is omitted.

- * means a syntax element that can be repeated 0 or more times. A dotted decimal number followed by the * symbol indicates that this syntax element can be used zero or more times; that is, it is optional and can be repeated. For example, if you hear the line 5.1* data area, you know that you can include one data area, more than one data area, or no data area. If you hear the lines 3*, 3 HOST, and 3 STATE, you know that you can include HOST, STATE, both together, or nothing.

  Note:

  1. If a dotted decimal number has an asterisk (*) next to it and there is only one item with that dotted decimal number, you can repeat that same item more than once.
  2. If a dotted decimal number has an asterisk next to it and several items have that dotted decimal number, you can use more than one item from the list, but you cannot use the items more than once each. In the previous example, you could write HOST STATE, but you could not write HOST HOST.
  3. The * symbol is equivalent to a loop-back line in a railroad syntax diagram.
- + means a syntax element that must be included one or more times. A dotted decimal number followed by the + symbol indicates that this syntax element must be included one or more times; that is, it must be included at least once and can be repeated. For example, if you hear the line 6.1+ data area, you must include at least one data area. If you hear the lines 2+, 2 HOST, and 2 STATE, you know that you must include HOST, STATE, or both. Similar to the * symbol, the + symbol can only repeat a particular item if it is the only item with that dotted decimal number. The + symbol, like the * symbol, is equivalent to a loop-back line in a railroad syntax diagram.

Notices

This information was developed for products and services offered in the U.S.A. or elsewhere.

IBM may not offer the products, services, or features discussed in this document in other countries. Consult your local IBM representative for information on the products and services currently available in your area. Any reference to an IBM product, program, or service is not intended to state or imply that only that IBM product, program, or service may be used. Any functionally equivalent product, program, or service that does not infringe any IBM intellectual property right may be used instead. However, it is the user's responsibility to evaluate and verify the operation of any non-IBM product, program, or service.

IBM may have patents or pending patent applications covering subject matter described in this document. The furnishing of this document does not give you any license to these patents. You can send license inquiries, in writing, to:

IBM Director of Licensing
IBM Corporation
North Castle Drive
Armonk, NY 10504-1785
U.S.A

For license inquiries regarding double-byte character set (DBCS) information, contact the IBM Intellectual Property Department in your country or send inquiries, in writing, to:

Intellectual Property Licensing
Legal and Intellectual Property Law
IBM Japan, Ltd.
19-21, Nihonbashi-Hakozakicho, Chuo-ku
Tokyo 103-8510, Japan

The following paragraph does not apply to the United Kingdom or any other country where such provisions are inconsistent with local law: INTERNATIONAL BUSINESS MACHINES CORPORATION PROVIDES THIS PUBLICATION “AS IS” WITHOUT WARRANTY OF ANY KIND, EITHER EXPRESS OR IMPLIED, INCLUDING, BUT NOT LIMITED TO, THE IMPLIED WARRANTIES OF NON-INFRINGEMENT, MERCHANTABILITY OR FITNESS FOR A PARTICULAR PURPOSE. Some states do not allow disclaimer of express or implied warranties in certain transactions, therefore, this statement may not apply to you.

This information could include technical inaccuracies or typographical errors. Changes are periodically made to the information herein; these changes will be incorporated in new editions of the publication. IBM may make improvements and/or changes in the product(s) and/or the program(s) described in this publication at any time without notice.

Any references in this information to non-IBM Web sites are provided for convenience only and do not in any manner serve as an endorsement of those Web sites. The materials at those Web sites are not part of the materials for this IBM product and use of those Web sites is at your own risk.

© Copyright IBM Corp. 1988, 2013

IBM may use or distribute any of the information you supply in any way it believes appropriate without incurring any obligation to you.

Licensees of this program who wish to have information about it for the purpose of enabling: (i) the exchange of information between independently created programs and other programs (including this one) and (ii) the mutual use of the information which has been exchanged, should contact:

Site Counsel
IBM Corporation
2455 South Road
Poughkeepsie, NY 12601-5400
USA

Such information may be available, subject to appropriate terms and conditions, including in some cases, payment of a fee.

The licensed program described in this information and all licensed material available for it are provided by IBM under terms of the IBM Customer Agreement, IBM International Program License Agreement, or any equivalent agreement between us.

Information concerning non-IBM products was obtained from the suppliers of those products, their published announcements or other publicly available sources. IBM has not tested those products and cannot confirm the accuracy of performance, compatibility or any other claims related to non-IBM products. Questions on the capabilities of non-IBM products should be addressed to the suppliers of those products.

All statements regarding IBM's future direction or intent are subject to change or withdrawal without notice, and represent goals and objectives only.

If you are viewing this information softcopy, the photographs and color illustrations may not appear.

COPYRIGHT LICENSE:

This information might contain sample application programs in source language, which illustrate programming techniques on various operating platforms. You may copy, modify, and distribute these sample programs in any form without payment to IBM, for the purposes of developing, using, marketing or distributing application programs conforming to the application programming interface for the operating platform for which the sample programs are written. These examples have not been thoroughly tested under all conditions. IBM, therefore, cannot guarantee or imply reliability, serviceability, or function of these programs. The sample programs are provided "AS IS", without warranty of any kind. IBM shall not be liable for any damages arising out of your use of the sample programs.

Policy for unsupported hardware

Various z/OS elements, such as DFSMS, HCD, JES2, JES3, and MVS, contain code that supports specific hardware servers or devices. In some cases, this device-related element support remains in the product even after the hardware devices pass their announced End of Service date. z/OS may continue to service element code; however, it will not provide service related to unsupported hardware devices. Software problems related to these devices will not be accepted for service, and current service activity will cease if a problem is determined to be associated with out-of-support devices. In such cases, fixes will not be issued.

Minimum supported hardware

The minimum supported hardware for z/OS releases identified in z/OS announcements can subsequently change when service for particular servers or devices is withdrawn. Likewise, the levels of other software products supported on a particular release of z/OS are subject to the service support lifecycle of those products. Therefore, z/OS and its product publications (for example, panels, samples, messages, and product documentation) can include references to hardware and software that is no longer supported.

- For information about software support lifecycle, see: IBM Lifecycle Support for z/OS (http://www.ibm.com/software/support/systemsz/lifecycle/)
- For information about currently-supported IBM hardware, contact your IBM representative.

Trademarks

IBM, the IBM logo, and ibm.com are trademarks or registered trademarks of International Business Machines Corp., registered in many jurisdictions worldwide. Other product and service names might be trademarks of IBM or other companies. A current list of IBM trademarks is available at Copyright and Trademark information (http://www.ibm.com/legal/copytrade.shtml).

Index

A

accessibility 591
  contact IBM 591
  features 591
additional recommendations for specifying keywords
  related to function code 54 71
address space
  subsystem 463
application thread
  caller of the SSI function code 79 155
ASCRE macro
  using to create a separate address space 464
assistive technologies 591
associate a new function routine with a supported function code
  use of 477
  with the IEFSSVT macro 477
automatic restart manager
  considerations 55

B

batch jobs
  initiating a job 8
broadcast request
  description 2
build the SSVT
  considerations 475, 575
  with the IEFJSVEC service 575
  with the REQUEST=CREATE parameter 475
BULK MODIFY SAPI Call
  SSI Function Code 79 144

C

command processing call - SSI function code 10
  considerations 517
  considerations for system symbols 518
  description 511
  restrictions 517
  sysplex considerations 518
command processing call - SSI function code 14
  considerations 522
  description 519
  restrictions 521
command sensitive area
  contents 516
  for a REPLY command 516
considerations
  automatic restart manager 55
COUNT SAPI Call
  SSI Function Code 79 144
create an SSIB
  steps 9

D

DALBRTKN text unit
  use of 146
DALDSNAM text unit
  use of 29
  use of for SSI Function Code 79 149
DALRTDDN text unit
  use of 29
DALSSREQ text unit
  use of 29
  use of for SSI Function Code 79 149
define your subsystem
  description 464
directed request
  description 2
disable previously supported functions
  use of 477, 585
  with the IEFJSVEC service 585
  with the IEFSSVT macro 477
DUNDDNAM text unit
  use of 30, 146
DUNOVCLS text unit
  use of 30
DUNOVDSP text unit
  use of 30
DUNOVSNH text unit
  use of 30
DUNOVSUS text unit
  use of 30
dynamic SSI 4
  description 4

E

early notification of end-of-task call - SSI function code 50
  description 524
enable your subsystem for new functions
  use of 476, 580
  with the IEFJSVEC service 580
  with the IEFSSVT macro 476
end-of-address space (end-of-memory) call - SSI function code 8
  description 491
end-of-task call - SSI function code 4
  description 487
environment on entry to a function routine
  description 462
  register contents 462
example
  for extended status function call - SSI function code 80 246
  for request subsystem version information call - SSI function code 54 71
  for the process SYSOUT data sets call - SSI function code 1 33
  passing accounting parameters 470
extended status function call - SSI function code 80
  example 246
Extended Status function call - SSI function code 80
  description 185
external writer 14
  caller of the SSI function code 1 14
  considerations 30

F

first line of a multi-line WTO
  WQE (major WQE) contents 503
fixed header input section
  contents 63
  description 61
fixed header output section
  contents 66
  description 66
format of the variable output sections 68
function code descriptions
  for SSI function codes your program can request 13
function codes (SSI)
  description 7
  list of 13, 487
  requirements 461
function routines
  placement 463
  requirements 461

H

help call - SSI function code 48
  description 522

I

IBM-defined keywords
  related to function code 54 68
IEAVG700 module
  calling the module 495
IEFJSIPL mapping macro 472
IEFJSSIB mapping macro 8
IEFJSVEC service
  disabling functions 585
  enabling functions 580
  using to build the SSVT 575
IEFSSNxx parmlib member
  planning 464
IEFSSOBH mapping macro 7
IEFSSREQ macro
  description 9
  introduction 7
  syntax 10
  use of 9
  with subsystem affinity service 484

© Copyright IBM Corp. 1988, 2013

IEFSSVT macro
  disabling functions 477
  enabling functions 476
  replacing the function routine 477
  use to build SSVT 463
  use to build the SSVT 475
  use to disable subsystem function codes 463
  use to enable functions 463
IEFSSVTI macro
  use of 475
initial program load 465
initialization routine 473
  specifying 467
  subsystem 472
initialize your subsystem
  by specifying an initialization routine 467
  by using the START command 467
input to the SSVT 475
Input-only fields 158
installation variable output section
  contents 68
  description 68
  restrictions 70
integrity
  subsystem considerations 462
IPL (initial program load)
  considerations 465

J

JES device information services
  processing request 341
    64-bit addressable virtual storage 342
  request types 342
JES device information services - SSI function code 83
  description 341
JES job information services - SSI function code 71
  description 87
JES Properties - SSI function code 82
  description 250
JES2 subsystem 1
JES3 subsystem 1
JESSPOOL SAF resource class
  use of for Function Code 79 146, 152

K

keyboard
  navigation 591
  PF keys 591
  shortcut keys 591

L

life-of-job SSIB
  description 8
  use 17, 157
load-to-global option 463

M

maintain information about subsystem callers
  subsystem affinity entry 484
  using the subsystem affinity service 483
make a request of a subsystem
  summary of steps 11
  using the IEFSSREQ macro 9
MCSOPER/MCSOPMSG macro services
  use of 497
Modify Job function call - SSI function code 85
  description 431
multi-line WTO
  for SSI function code 9 503
  SSWT contents 503
  subsequent lines 506
  WQE (minor WQE) contents 506

N

name your subsystem
  restrictions 464
navigation
  keyboard 591
Notices 595
notify user message service call - SSI function code 75
  description 137

O

obtain a value from an entry 484

P

placement of function routines 463
  setting the load-to-global option 463
primary subsystem
  description 1
procedure of searching data strings 68
process SYSOUT data sets call - SSI function code 1
  description 14
  example 33
  retrieval attributes 14
  update attributes 14
processing flow for single data set requests
  for process SYSOUT data sets call - SSI function code 1 29
  processing all data sets together 30
  processing one data set at time
    steps 29
PUT/GET SAPI Call
  SSI Function Code 79 144

R

recovery
  subsystem considerations 462
register contents
  on entry to a function routine 462
request a function of a subsystem
  steps 7
request command processing information
  description 511, 519
request job ID call - SSI function code 20
  description 49
  restrictions 55
request subsystem version information
  installation-defined keywords 70
request subsystem version information call - SSI function code 54
  description 60, 528
  example 71
request types
  for SYSOUT Application Program Interface 143
restrictions for SSI function code 10 517
restrictions for SSI function code 14 521
return code information
  for command processing call - SSI function code 10 517
  for delete operator message - SSI function code 14 521
  for early notification of end-of-task call - SSI function code 50 528
  for end-of-address space (end-of-memory) call - SSI function code 8 495
  for end-of-task call — SSI function code 4 491, 524
  for extend status function call - SSI function code 80 208
  for Initiator Information - SSI Function Code 82 296
  for JES Device Information Services - SSI Function Code 83 355
  for JES job information services - SSI Function Code 71 93
  for JES Job Information Services - SSI Function Code 71 101, 114, 126, 132
  for JESPLEX Information - SSI Function Code 82 313
  for Job Class Information - SSI Function Code 82 328
  for modify job function call - SSI function code 85 451
  for NJE NODE Information - SSI Function Code 82 257
  for notify user message service call - SSI function code 75 141
  for process SYSOUT data sets call - SSI function code 1 23
  for request job ID call - SSI function code 20 53
  for request subsystem version information call - SSI function code 54 64, 531
  for return job ID call - SSI function code 21 59
  for scheduler facilities call - SSI function code 70 83
  for SMF SUBPARM option change call - SSI function code 58 538
  for SPOOL Volume Information - SSI Function Code 82 275
  for SYSOUT Application Program Interface - SSI function code 79 172

return code information *(continued)*
  for user destination validation/conversion - SSI function code 11 43
  for verify subsystem function call - SSI function code 15 48
  for WTO/WTOR call - SSI function code 9 509
return codes from a directed request
  list of 10
return job ID call - SSI function code 21
  description 56

S

scheduler facilities call - SSI function code 70
  description 77
Scheduler Work Blocks (SWBs)
  use of in Function Code 79 148
secondary subsystem
  description 1
sending comments to IBM xi
services for building and using your subsystem
  activating your subsystem 478
  adding your subsystem 471
  changing what your subsystem can do 476
  deactivating your subsystem 479
  defining subsystem options 481
  defining what your subsystem can do 474
  description 471
  initializing your subsystem 472
  maintaining information about subsystem callers 483
  querying subsystem information 482
  storing and retrieving subsystem-specific information 480
  swapping subsystem functions 480
services for writing your subsystem
  changing what your subsystem can do 580
  defining what your subsystem can do 575
set a value in an entry 484
SET SMF=xx command
  use of 470
set up the environment
  to make a request of a subsystem 7
SETSMF command
  use of 470
setting up your subsystem
  planning considerations 461
shortcut keys 591
single-line WTO
  WQE contents 500
SJFREQ macro
  use of in Function Code 79 148
SMF console command
  use of 469
SMF parmlib member (SMFPRMxx)
  use of 469
SMF SUBPARM option
  initializing the SMF parameters 469
  initializing the subsystem 469
SMF SUBPARM option *(continued)*
  modifying the SUBPARM value 469
  processing 469
SMF SUBPARM option change call - SSI function code 58
  description 535
SMFCHSUB macro
  use of 470
specifying keywords
  related to function code 54 70
SSAFF macro
  DATA parameter 486
  description 484, 485, 486
  ENTRY parameter 486
  OBTAIN parameter 485
  parameters 485, 486
  SET parameter 485
  symbol 485
  syntax 485
  TCB parameter 486
  use of 484
SSCVT (subsystem communication vector table) 462
  address of the SSCVT 462
SSI (subsystem interface) 1
  attributes 1
  description 1
  error handling 555
  examples 561
  introduction 1
  troubleshooting errors 555
SSI Function Code 54
  use of in SSI Function Code 79 145
SSI function code 83
  JES device information services 341
SSI function code descriptions
  for SSI function codes your program can request 13
  for SSI function codes your subsystem can support 487
SSI function codes
  list of 13, 487
SSI function codes your program can request
  list of 13
SSI function codes your subsystem can support
  list of 487
SSI processing
  controlling 3
SSIB (subsystem identification block)
  description 8
SSIB data area 8
SSIBID field
  setting the field to create an SSIB 9
SSIBJBID field
  setting the field to create an SSIB 9
SSIBLEN field
  setting the field to create an SSIB 9
SSIBSSNM field
  setting the field to create an SSIB 9
SSIBSUSE field
  setting the field to create an SSIB 9
SSOB (subsystem options block)
  description 7
SSOB data area 7
SSOB function dependent area
  description 8
SSRTDIST return code value
  from a directed request 11
SSRTLERR return code value
  from a directed request 11
SSRTNOSS return code value
  from a directed request 11
SSRTNSUP return code value
  from a directed request 10
SSRTNTUP return code value
  from a directed request 11
SSRTOK return code value
  from a directed request 10
SSS2BTOK field
  use of 149
SSS2BULK request
  use of 144
SSS2CDS field
  use of 148, 150
SSS2COUN request
  use of 144
SSS2CTRL field
  use of 144, 149, 151
SSS2DDES field
  use of 145
SSS2DELC field
  use of 151
SSS2DES2 field
  use of 145
SSS2DESR field
  use of 145
SSS2DEST field
  use of 145
SSS2DSN field
  use of 146
SSS2ECBP field
  use of 148, 151, 153, 159
SSS2EODS field
  use of 148, 149
SSS2FSWB field
  use of 148
SSS2FSWT field
  use of 148
SSS2JEST field
  use of 144
SSS2PUGE request
  use of 144
SSS2RBA field
  use of 159
SSS2RET2 field
  use of 145
SSS2RLSE field
  use of 151
SSS2ROUT field
  use of 151
SSS2SETC field
  use of 151
SSS2SWBT field
  use of 148
SSS2SWTU field
  use of 148
SSS2UFLG field
  use of 159
SSS2WRSN field
  use of 148

SSS2WRTN field
  use of 148
SSSOFOR8 field
  use of 19
SSSOFORM field
  use of 19
SSSOWTRC field
  contents of on return from the IEFSSREQ macro 32
SSWT contents for a WTOR (always single-line) 508
SSWT contents for the first line of a multi-line WTO 503
START command
  using to initialize your subsystem 467
started task
  initiating a started task 8
subsystem 1
  broadcast request 2, 461
  considerations 3
  defining to MVS 464
  description 1
  diagnosing errors 555
  directed request 2, 461
  error handling 555
  examples 561
  functions 461
  IEFSSREQ macro 9
  initialization routine 472
  initializing 466
  integrity 462
  MVS use 461
  passing accounting parameters 469
  primary 1
  recovery 462
  request types 2, 461
  requesting a function 7
  secondary 1
  setting up your subsystem 461
  subsystem affinity service 483
  types 1
  writing your own subsystem 461
subsystem affinity service
  description 483, 484, 485
  SSAFF OBTAIN request 485
  SSAFF SET request 484
subsystem communication vector table 462
subsystem identification block 8
subsystem initialization routine
  description 466
  examples 466
subsystem options block 7
subsystem requests
  broadcast 2
  directed 2
summary of changes
  as updated December 2013 xiii
Summary of changes xiii
SWBTUREQ macro
  use of in Function Code 79 148
SYSOUT Application Program Interface (SAPI) - SSI function code 79
  description 143
sysplex
  command processing SSI call - SSI function code 10 518
system message
  controlling 495
  with SSI function code 9 495
system symbols
  command processing SSI call - SSI function code 10 518
system variable output section
  contents 68
  description 68

T

tape device selection call - SSI function code 78
  description 538
trademarks 597
troubleshoot errors in your subsystem
  common types of errors 555
  description 555
  handling initialization errors 555
TSO/E user
  initiating a LOGON 9
types of subsystem requests
  broadcast 2
  directed 2

U

unique attributes of the SSI
  description 1
use 484
user destination validation/conversion - SSI function code 11
  description 39
user interface
  ISPF 591
  TSO/E 591

V

verify subsystem function call - SSI function code 15
  description 44
VTSCREAT SSVT build indicator 577
VTSGLOAD load-to-global indicator 577

W

Wildcards
  SSI Function Code 79 145
WQE (major WQE) contents for the first line of a multi-line WTO 503
WQE (minor WQE) contents for subsequent lines of a multi-line WTO 506
WQE contents for a single-line WTO 500
write your own subsystem
  considerations 3
writer communication area
  contents 32
  description 32
writing your own subsystem
  decisions you must make 466
  recovery and integrity considerations 462
  steps 461
WTO/WTOR call - SSI function code 9
  description 495
WTOR (always single-line)
  SSWT contents 508

Product Number: 5650-ZOS

Printed in USA

SA38-0679-01