IBM COBOL for Linux on x86 1.2

Language reference

SC28-3117-01

Note

Before using this information and the product it supports, be sure to read the general information under "Notices" on page 639.

Third edition (December 2025)

This edition applies to Version 1.2 of IBM® COBOL for Linux® on x86 (program number 5737-L11) and to all subsequent releases and modifications until otherwise indicated in new editions. Make sure you are using the correct edition for the level of the product.

You can view or download softcopy publications free of charge in the COBOL for Linux on x86 library.

© Copyright International Business Machines Corporation 2021, 2025.
US Government Users Restricted Rights – Use, duplication or disclosure restricted by GSA ADP Schedule Contract with IBM Corp.

Contents

Tables ..... **xv**

Preface ..... **xix**
About this information xix
How to read the syntax diagrams xix
How to use examples xxi
IBM extensions xxi
Accessibility xxi
How to send your comments xxii

Part 1. COBOL language structure **1**

Chapter 1. Characters 3

Chapter 2. Character sets and code pages 7
Character encoding units 7

Chapter 3. Character-strings 11
COBOL words with single-byte characters 11
User-defined words with multibyte characters 12
User-defined words 12
System-names 14
Function-names 14
Reserved words 14
Figurative constants 15
Special registers 17
ADDRESS OF 18
DEBUG-ITEM 18
FORMAT OF 19
LENGTH OF 20
LINAGE-COUNTER 21
LOCALE OF 22
RETURN-CODE 22
SHIFT-OUT and SHIFT-IN 22
SORT-CONTROL 23
SORT-CORE-SIZE 23
SORT-FILE-SIZE 23
SORT-MESSAGE 24
SORT-MODE-SIZE 24
SORT-RETURN 24
TALLY 25
WHEN-COMPILED 25
XML-CODE 25
XML-EVENT 26
XML-NTEXT 28
XML-TEXT 28
Literals 29
Alphanumeric literals 29
Boolean literals 32
DBCS literals 32

Numeric literals....33
National literals....34
PICTURE character-strings....36
Comments....36

Chapter 4. Separators....39
Rules for separators....39

Chapter 5. Sections and paragraphs....43
Sentences, statements, and entries....43
Entries....44
Clauses....44
Sentences....44
Statements....44
Phrases....44

Chapter 6. Reference format....45
Sequence number area....45
Indicator area....46
Area A....46
Division headers....46
Section headers....46
Paragraph headers or paragraph names....47
Level indicators (FD and SD) or level-numbers (01 and 77)....47
DECLARATIVES and END DECLARATIVES....47
END PROGRAM markers....47
Area B....47
Entries, sentences, statements, clauses....47
Continuation lines....48
Area A or Area B....50
Level-numbers....50
Comment lines....50
Floating comment indicators (*>)....50
Compiler-directing statements....51
Compiler directives....51
Debugging lines....51
Pseudo-text....51
Blank lines....51
Source conversion utility (scu)....51

Chapter 7. Scope of names....53
Types of names....53
External and internal resources....55
Resolution of names....55

Chapter 8. Referencing data names, copy libraries, and PROCEDURE DIVISION names....57
Uniqueness of reference....57
Qualification....57
Identical names....58
References to COPY libraries....58
References to PROCEDURE DIVISION names....58
References to DATA DIVISION names....58
Condition-name....61
Index-name....61
Index data item....62
Record-key-name....62
Subscripting....63
Reference modification....66

Function-identifier.... 68
User-defined data types.... 69
Data attribute specification....70

Chapter 9. Transfer of control....71

Chapter 10. Millennium Language Extensions and date fields....73
Millennium Language Extensions syntax....73
Terms and concepts.... 73
Date field.... 74
Nondate....75
Century window.... 75

Part 2. COBOL program structure.... 77

Chapter 11. Nested programs.... 81
Conventions for program-names.... 82

Part 3. IDENTIFICATION DIVISION....85

Chapter 12. PROGRAM-ID paragraph.... 87

Chapter 13. Optional paragraphs.... 89

Part 4. Environment division.... 91

Chapter 14. Configuration section....93
SOURCE-COMPUTER paragraph.... 93
OBJECT-COMPUTER paragraph....94
SPECIAL-NAMES paragraph....95
ALPHABET clause....99
CLASS clause....100
CURRENCY SIGN clause.... 101
DECIMAL-POINT IS COMMA clause.... 102
FORMAT clause.... 102
SIZE phrase....104
LOCALE phrase.... 104
LOCALE clause....105
SYMBOLIC CHARACTERS clause....105

Chapter 15. Input-Output section....107
FILE-CONTROL paragraph.... 107
SELECT clause....112
ASSIGN clause.... 112
Assignment name for user-defined words and literals.... 113
Assignment name for data-names and environment variables.... 115
File concatenation.... 116
RESERVE clause.... 117
ORGANIZATION clause....117
File organization.... 118
PADDING CHARACTER clause....120
RECORD DELIMITER clause....120
ACCESS MODE clause.... 121
File organization and access modes.... 122
Access modes....122
Relationship between data organizations and access modes.... 123
RECORD KEY clause....123

ALTERNATE RECORD KEY clause....125
RELATIVE KEY clause....127
PASSWORD clause....127
FILE STATUS clause....127
I-O-CONTROL paragraph....128
RERUN clause....129
SAME AREA clause....130
SAME RECORD AREA clause....130
SAME SORT AREA clause....131
SAME SORT-MERGE AREA clause....131
MULTIPLE FILE TAPE clause....131
APPLY WRITE-ONLY clause....131

Part 5. Data division....133

Chapter 16. DATA DIVISION overview....135
FILE SECTION....136
WORKING-STORAGE SECTION....136
LOCAL-STORAGE SECTION....137
LINKAGE SECTION....137
Data units....137
File data....137
Program data....138
Data relationships....138
Levels of data....138
Levels of data in a record description entry....139
Special level-numbers....140
Indentation....140
Classes and categories of group items....140
Classes and categories of data....141
Category descriptions....143
Alignment rules....146
Character-string and item size....146
Signed data....147

Chapter 17. File description entries....149
FILE SECTION....154
EXTERNAL clause....154
GLOBAL clause....155
BLOCK CONTAINS clause....155
RECORD clause....156
Format 1....156
Format 2....156
Format 3....157
LABEL RECORDS clause....158
VALUE OF clause....158
DATA RECORDS clause....158
LINAGE clause....159
LINAGE-COUNTER special register....160
RECORDING MODE clause....160
CODE-SET clause....160

Chapter 18. Data description entry....161
Format 1....161
Format 2....162
Format 3....162
Format 4....162

Format 5 ... 164
Level-numbers ... 164
BLANK WHEN ZERO clause ... 165
DATE FORMAT clause ... 166
Semantics of windowed date fields ... 166
Restrictions on using date fields ... 167
EXTERNAL clause ... 170
FORMAT clause ... 170
SIZE phrase ... 172
USAGE for a class date-time item ... 172
FORMAT clause and PICTURE clause similarities ... 172
GLOBAL clause ... 172
GROUP-USAGE clause ... 173
JUSTIFIED clause ... 174
LIKE Clause ... 175
Comments generated based on inherited USAGE characteristics ... 176
Rules and restrictions ... 176
Coding Examples ... 177
OCCURS clause ... 177
Fixed-length tables ... 178
ASCENDING KEY and DESCENDING KEY phrases ... 178
INDEXED BY phrase ... 180
Variable-length tables ... 180
OCCURS DEPENDING ON clause ... 181
PICTURE clause ... 182
LOCALE phrase ... 183
Symbols used in the PICTURE clause ... 184
Character-string representation ... 190
Data categories and PICTURE rules ... 190
PICTURE clause editing ... 197
Simple insertion editing ... 198
Special insertion editing ... 199
Fixed insertion editing ... 199
Floating insertion editing ... 200
Zero suppression and replacement editing ... 202
REDEFINES clause ... 203
REDEFINES clause considerations ... 205
REDEFINES clause examples ... 205
Undefined results ... 206
RENAMES clause ... 206
SIGN clause ... 208
SYNCHRONIZED clause ... 209
Slack bytes ... 211
Slack bytes within records ... 211
Slack bytes between records ... 213
TYPE clause ... 214
TYPEDEF clause ... 215
USAGE clause ... 216
Computational items ... 217
DISPLAY phrase ... 219
DISPLAY-1 phrase ... 220
FUNCTION-POINTER phrase ... 220
INDEX phrase ... 220
NATIONAL phrase ... 221
POINTER phrase ... 221
PROCEDURE-POINTER phrase ... 222
NATIVE phrase ... 222
VALUE clause ... 223

Format 1....223
Format 2....225
Format 3....228

Part 6. Procedure division....229

Chapter 19. Procedure division structure....231
The PROCEDURE DIVISION header....232
The USING phrase....232
GIVING/RETURNING phrase....233
References to items in the LINKAGE SECTION....233
Declaratives....234
Procedures....234
Arithmetic expressions....235
Arithmetic operators....236
Arithmetic with date fields....237
Conditional expressions....240
Simple conditions....240
Class condition....240
Condition-name condition....242
Relation conditions....244
General relation conditions....244
Data pointer relation conditions....253
Procedure-pointer and function-pointer relation conditions....255
Sign condition....255
Switch-status condition....256
Complex conditions....256
Negated simple conditions....257
Combined conditions....258
Abbreviated combined relation conditions....260
Statement categories....263
Imperative statements....263
Conditional statements....264
Delimited scope statements....266
Explicit scope terminators....266
Implicit scope terminators....267
Compiler-directing statements....267
Statement operations....267
CORRESPONDING phrase....267
GIVING phrase....268
ROUNDED phrase....268
SIZE ERROR phrases....269
Arithmetic statements....270
Arithmetic statement operands....270
Data manipulation statements....272
Input-output statements....272
Common processing facilities....272

Chapter 20. PROCEDURE DIVISION statements....279
ACCEPT statement....279
Data transfer....279
System date-related information transfer....280
DATE, DATE YYYYMMDD, DAY, DAY YYYYDDD, DAY-OF-WEEK, and TIME....281
Example of the ACCEPT statement....282
ADD statement....283
ALTER statement....285
CALL statement....286

CANCEL statement....292
CLOSE statement....293
Effect of CLOSE statement on file types....294
COMPUTE statement....295
CONTINUE statement....297
DELETE statement....297
DISPLAY statement....298
DIVIDE statement....300
ENTRY statement....303
EVALUATE statement....304
Determining values....306
Comparing selection subjects and objects....307
Executing the EVALUATE statement....307
EXIT statement....307
Format 1 (simple)....308
Format 2 (program)....308
Format 5 (inline-perform)....308
Format 6 (procedure)....309
GOBACK statement....309
GO TO statement....310
Unconditional GO TO....310
Conditional GO TO....310
Altered GO TO....311
IF statement....311
Transferring control....312
Nested IF statements....313
INITIALIZE statement....313
INITIALIZE statement rules....315
INSPECT statement....316
Data flow....323
Comparison cycle....323
Example of the INSPECT statement....324
MERGE statement....325
MERGE special registers....329
MOVE statement....329
Elementary moves....330
Moves involving date fields....334
Moves involving file record areas....335
Group moves....335
MULTIPLY statement....336
OPEN statement....338
General rules....339
Label records....340
OPEN statement notes....340
PERFORM statement....342
Basic PERFORM statement....343
PERFORM with TIMES phrase....346
PERFORM with UNTIL phrase....346
PERFORM with VARYING phrase....347
READ statement....352
Multiple record processing....355
Sequential access mode....355
Random access mode....357
Dynamic access mode....358
READ statement notes....358
RELEASE statement....358
RETURN statement....359
REWRITE statement....360

Reusing a logical record.... 362
Sequential files.... 362
Indexed files.... 362
Relative files.... 362
SEARCH statement.... 363
Serial search.... 364
Binary search.... 367
Search statement considerations.... 368
SET statement.... 369
Format 1: SET for basic table handling.... 369
Format 2: SET for adjusting indexes.... 370
Format 3: SET for external switches.... 371
Format 4: SET for condition-names.... 371
Format 5: SET for USAGE IS POINTER data items.... 372
Format 6: SET for procedure-pointer and function-pointer data items.... 373
Format 7: SET for USAGE OBJECT REFERENCE data items.... 374
Format 8: SET for length of dynamic-length elementary items.... 374
Format 9: SET for adjusting pointers.... 374
Format 10: SET for locale categories.... 374
SORT statement.... 376
SORT special registers.... 384
START statement.... 385
Indexed files.... 386
Relative files.... 387
STOP statement.... 387
STRING statement.... 387
Data flow.... 390
Example of the STRING statement.... 391
SUBTRACT statement.... 392
UNSTRING statement.... 395
Data flow.... 399
Values at the end of execution of the UNSTRING statement.... 400
Example of the UNSTRING statement.... 400
WRITE statement.... 401
WRITE for sequential files.... 406
WRITE for indexed files.... 406
WRITE for relative files.... 406
XML GENERATE statement.... 407
Nested XML GENERATE or XML PARSE statements.... 414
Operation of XML GENERATE.... 414
Format conversion of elementary data.... 415
Trimming of generated XML data.... 416
XML element name and attribute name formation.... 417
XML PARSE statement.... 417
Nested XML GENERATE or XML PARSE statements.... 420
Control flow.... 420

Part 7. Intrinsic functions.... 423

Chapter 21. Specifying a function.... 425
Function definition and evaluation.... 425
Types of functions.... 426
Rules for usage.... 426
Arguments.... 428
Examples.... 430
ALL subscripting.... 430

Chapter 22. Function definitions....433
Chapter 23. ACOS....439
Chapter 24. ADD-DURATION....441
Chapter 25. ANNUITY....443
Chapter 26. ASIN....445
Chapter 27. ATAN....447
Chapter 28. CHAR....449
Chapter 29. CONVERT-DATE-TIME....451
Chapter 30. COS....453
Chapter 31. CURRENT-DATE....455
Chapter 32. DATE-OF-INTEGER....457
Chapter 33. DATE-TO-YYYYMMDD....459
Chapter 34. DATEVAL....461
Chapter 35. DAY-OF-INTEGER....463
Chapter 36. DAY-TO-YYYYDDD....465
Chapter 37. DISPLAY-OF....467
Chapter 38. EXTRACT-DATE-TIME....469
Chapter 39. FACTORIAL....471
Chapter 40. FIND-DURATION....473
Chapter 41. INTEGER....475
Chapter 42. INTEGER-OF-DATE....477
Chapter 43. INTEGER-OF-DAY....479
Chapter 44. INTEGER-PART....481
Chapter 45. LENGTH....483
Chapter 46. LOG....485
Chapter 47. LOG10....487
Chapter 48. LOWER-CASE....489
Chapter 49. MAX....491
Chapter 50. MEAN....493

Chapter 51. MEDIAN 495
Chapter 52. MIDRANGE 497
Chapter 53. MIN 499
Chapter 54. MOD 501
Chapter 55. NATIONAL-OF 503
Chapter 56. NUMVAL 505
Chapter 57. NUMVAL-C 507
Chapter 58. ORD 509
Chapter 59. ORD-MAX 511
Chapter 60. ORD-MIN 513
Chapter 61. PRESENT-VALUE 515
Chapter 62. RANDOM 517
Chapter 63. RANGE 519
Chapter 64. REM 521
Chapter 65. REVERSE 523
Chapter 66. SIN 525
Chapter 67. SQRT 527
Chapter 68. STANDARD-DEVIATION 529
Chapter 69. SUBTRACT-DURATION 531
Chapter 70. SUM 533
Chapter 71. TAN 535
Chapter 72. TEST-DATE-TIME 537
Chapter 73. TRIM 539
Chapter 74. TRIML 541
Chapter 75. TRIMR 543
Chapter 76. UNDATE 545
Chapter 77. UPPER-CASE 547
Chapter 78. UTF8STRING 549
Chapter 79. VARIANCE 551

Chapter 80. WHEN-COMPILED..... 553

Chapter 81. YEAR-TO-YYYY..... 555

Chapter 82. YEARWINDOW..... 557

Part 8. Compiler-direction statments and compiler directives..... 559

Chapter 83. Compiler-directing statements..... 561
BASIS statement..... 561
PROCESS(CBL) statement..... 562
*CONTROL (*CBL) statement..... 562
Source code listing..... 563
Object code listing..... 563
Storage map listing..... 563
COPY statement..... 564
Comparison and replacement rules..... 567
Comparison and replacement examples..... 569
DELETE statement..... 573
EJECT statement..... 574
ENTER statement..... 574
INSERT statement..... 574
READY or RESET TRACE statement..... 575
REPLACE statement..... 575
Comparison rules..... 577
Replacement rules..... 578
SERVICE LABEL statement..... 579
SERVICE RELOAD statement..... 579
SKIP statements..... 580
TITLE statement..... 580
USE statement..... 581
EXCEPTION/ERROR declarative..... 581
Precedence rules for nested programs..... 582
DEBUGGING declarative..... 583

Chapter 84. Compiler directives..... 585
CALLINTERFACE..... 585
JAVA-CALLABLE Directive..... 585
Conditional compilation..... 587
DEFINE..... 588
EVALUATE..... 589
IF..... 591
Examples of conditional compilation..... 592
Constant conditional expressions..... 593
Compile-time arithmetic expressions..... 595
Predefined compilation variables..... 595

Appendix A. Appendixes..... 597
IBM extensions and COBOL standards..... 597
Obsolete language elements..... 609
DBCS notation..... 610
EBCDIC and ASCII collating sequences..... 610
EBCDIC collating sequence..... 611
US English ASCII code page..... 614
Source language debugging..... 617
Debugging lines..... 618

Debugging sections....618
DEBUG-ITEM special register....618
Activate compile-time switch....618
Activate object-time switch....619
Reserved words....619
Context-sensitive words....635
Locale considerations....635
Industry specifications....637

Notices....639
Programming interface information....641
Trademarks....641
Glossary....643
List of resources....683
COBOL for Linux publications....683
Related publications....683

Index....685

Tables

1. Basic COBOL character set.... 3

2. DEBUG-ITEM subfield contents....19

3. Contents of XML-EVENT and XML-TEXT or XML-NTEXT special registers....27

4. Separators.... 39

5. Meanings of environment names....98

6. Conversion specifiers that can be used in literal-8....103

7. Types of files.... 108

8. Assignment name for user-defined words....114

9. Assignment name for literals....114

10. Assignment name for data-names and environment variables.... 115

11. Classes and categories of group items....141

12. Class, category, and usage of elementary data items.... 142

13. Classes and categories of functions....143

14. Classes and categories of literals....143

15. Where national group items are processed as groups.... 174

16. Comments Generated based on Inherited USAGE Characteristics.... 176

17. PICTURE clause symbol meanings when the LOCALE phrase is not specified....184

18. PICTURE clause symbol meanings when the LOCALE phrase is specified....187

19. Numeric types....196

20. Data categories.... 198

21. SYNCHRONIZE clause effect on other language elements.... 210

22. Clauses that can or cannot be used with USAGE IS POINTER....221

23. Relation test references for condition-names.... 227

24. Binary and unary operators..... 236

25. Valid arithmetic symbol pairs..... 237

26. Results of using date fields in addition..... 238

27. Results of using date fields in subtraction..... 238

28. Storing arithmetic results that involve date fields when ON SIZE ERROR is specified..... 239

29. Valid forms of the class condition for different types of data items..... 242

30. Relational operators and their meanings..... 245

31. Comparisons involving data items and literals..... 247

32. Comparisons involving figurative constants..... 248

33. Comparisons for index-names and index data items..... 252

34. Comparisons with date fields..... 253

35. Permissible comparisons for USAGE POINTER, NULL, and ADDRESS OF..... 254

36. Logical operators and their meanings..... 257

37. Combined conditions—permissible element sequences..... 258

38. Logical operators and evaluation results of combined conditions..... 259

39. Abbreviated combined conditions: permissible element sequences..... 261

40. Abbreviated combined conditions: unabbreviated equivalents..... 262

41. Exponentiation size error conditions..... 269

42. How the composite of operands is determined..... 270

43. File status key values and meanings..... 273

44. Sequential files and CLOSE statement phrases..... 294

45. Indexed and relative file types and CLOSE statement phrases..... 295

46. Line-sequential file types and CLOSE statement phrases..... 295

47. Meanings of key letters for sequential file types..... 295

48. Treatment of the content of data items..... 322

49. CONVERTING example result....323

50. Valid and invalid elementary moves....333

51. Moves involving date fields....334

52. Availability of a file....340

53. Permissible statements for sequential files....341

54. Permissible statements for indexed and relative files....341

55. Permissible statements for line-sequential files....341

56. Sending and receiving fields for format-1 SET statement....370

57. Sending and receiving fields for format-5 SET statement....372

58. Character positions examined when DELIMITED BY is not specified....399

59. Table of functions....434

60. Execution of debugging declaratives....583

61. Predefined compilation variables....595

62. IBM extension language elements....597

63. EBCDIC collating sequence....611

64. ASCII collating sequence....614

65. Reserved words....619

66. Context-sensitive words....635

Preface

About this information

This information describes the COBOL language supported by IBM COBOL for Linux on x86, referred to in this information as COBOL for Linux.

See the *IBM COBOL for Linux on x86 Programming Guide* for information and examples that will help you write, compile, and debug COBOL programs.

How to read the syntax diagrams

Throughout the document, diagrams illustrate COBOL for Linux syntax.

Use the following description to read the syntax diagrams in this document:

- Read the syntax diagrams from left to right, from top to bottom, following the path of the line.

  The ▶▶── symbol indicates the beginning of a syntax diagram.

  The ──▶ symbol indicates that the syntax diagram is continued on the next line.

  The ▶── symbol indicates that the syntax diagram is continued from the previous line.

  The ──▶◀ symbol indicates the end of a syntax diagram.

  Diagrams of syntactical units other than complete statements start with the ▶── symbol and end with the ──▶ symbol.
- Required items appear on the horizontal line (the main path).

  Format

  ▶▶─ STATEMENT ── required item ─▶◀

- Optional items appear below the main path.

  Format

  ▶▶─ STATEMENT ┬──────────────┬─▶◀
  └─ optional item ─┘

- When you can choose from two or more items, they appear vertically, in a stack.

  If you *must* choose one of the items, one item of the stack appears on the main path.

  Format

  ▶▶─ STATEMENT ┬─ required choice 1 ─┬─▶◀
  └─ required choice 2 ─┘

  If choosing one of the items is optional, the entire stack appears below the main path.

© Copyright IBM Corp. 2021, 2025

Format

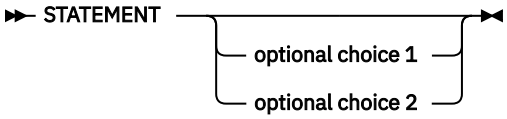

- An arrow returning to the left above the main line indicates an item that can be repeated.

Format

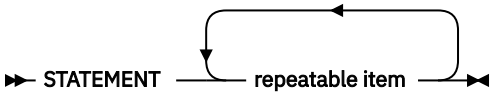

A repeat arrow above a stack indicates that you can make more than one choice from the stacked items, or repeat a single choice.

- Variables appear in italic lowercase letters (for example, *parmx*). They represent user-supplied names or values.
- If punctuation marks, parentheses, arithmetic operators, or other such symbols are shown, they must be entered as part of the syntax.

The following example shows how the syntax is used.

Format

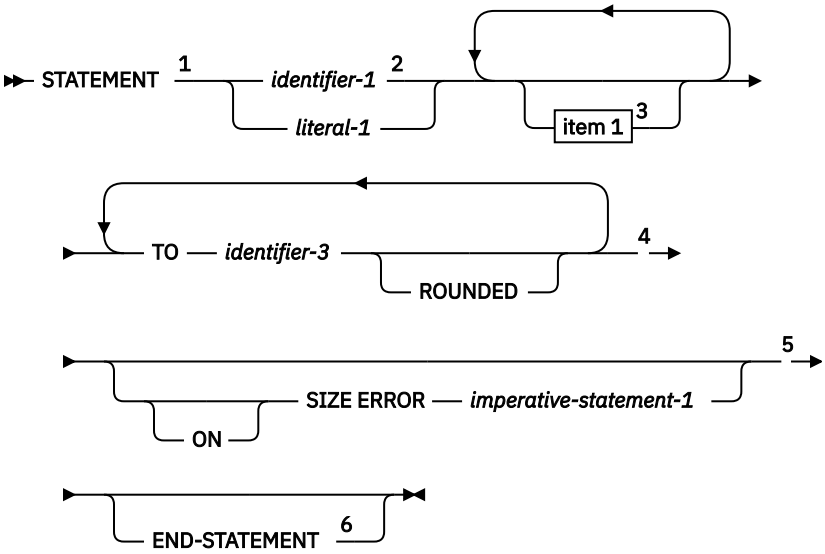

item 1

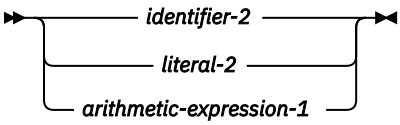

Notes:

[1] The STATEMENT keyword must be specified and coded as shown.

[2] This operand is required. Either *identifier-1* or *literal-1* must be coded.

[3] The item 1 fragment is optional; it can be coded or not, as required by the application. If item 1 is coded, it can be repeated with each entry separated by one or more COBOL separators. Entry selections allowed for this fragment are described at the bottom of the diagram.
[4] The operand *identifier-3* and associated TO keyword are required and can be repeated with one or more COBOL separators separating each entry. Each entry can be assigned the keyword ROUNDED.
[5] The ON SIZE ERROR phrase with associated *imperative-statement-1* is optional. If the ON SIZE ERROR phrase is coded, the keyword ON is optional.
[6] The END-STATEMENT keyword can be coded to end the statement. It is not a required delimiter.

How to use examples

The examples of program code in this information are written in lowercase, uppercase, or mixed case to demonstrate that you can write your programs in any of these ways.

To more clearly separate some examples from the explanatory text, they are presented in a `monospace font`.

COBOL keywords and compiler options that appear in text are generally shown in `SMALL UPPERCASE`. Other terms such as program variable names are sometimes shown in *an italic font* for clarity.

If you copy and paste examples from the PDF format documentation, make sure that the spaces in the examples (if any) are in place; you might need to manually add some missing spaces to ensure that COBOL source text aligns to the required columns per the COBOL reference format. Alternatively, you can copy and paste examples from the HTML format documentation and the spaces should be already in place.

IBM extensions

IBM extensions generally add features, syntax, or rules that are not specified in the ANSI and ISO COBOL standards listed in "Industry specifications" on page 637. In this document, the term 85 COBOL Standard refers to those standards.

Extensions range from minor relaxation of rules to major capabilities, such as XML support, Unicode support, and DBCS character handling.

The rest of this document describes the complete language without identifying extensions. You will need to review "IBM extensions and COBOL standards" on page 597 and the *Compiler options* in the *COBOL for Linux on x86 Programming Guide* if you want to use only standard language elements.

Accessibility

Accessibility features help users who have a disability, such as restricted mobility or limited vision, to use information technology products successfully.

Keyboard navigation

For information about accessing Linux interfaces, see Accessibility features for AIX® in the AIX Information Center.

Accessibility of this information

The English-language XHTML format of this information that will be provided in the IBM COBOL for Linux Documentation is accessible to visually impaired individuals who use a screen reader.

To enable your screen reader to accurately read syntax diagrams, source code examples, and text that contains the period, comma, or `PICTURE` symbols, you must set the screen reader to speak all punctuation.

IBM and accessibility

See the IBM Human Ability and Accessibility Center for more information about the commitment that IBM has to accessibility.

Accessibility features

IBM COBOL for Linux on x86 uses the latest W3C Standard, WAI-ARIA 1.0, to ensure compliance to US Section 508 and Web Content Accessibility Guidelines (WCAG) 2.0. To take advantage of accessibility features, use the latest release of your screen reader in combination with the latest web browser that is supported by this product.

Keyboard navigation

This product uses standard navigation keys.

Interface information

You can use speech recognition software like a Text-to-speech (TTS) tool to view the output generated by the product.

The online product documentation is available in IBM Documentation, which is viewable from a standard web browser.

PDF files have limited accessibility support. With PDF documentation, you can use optional font enlargement, high-contrast display settings, and can navigate by keyboard alone.

To enable your screen reader to accurately read syntax diagrams, source code examples, and text that contains the period or comma PICTURE symbols, you must set the screen reader to speak all punctuation.

Related accessibility information

In addition to standard IBM help desk and support websites, IBM has established a TTY telephone service for use by deaf or hard of hearing customers to access sales and support services:

TTY service 800-IBM-3383 (800-426-3383) (within North America)

IBM and accessibility

For more information about the commitment that IBM has to accessibility, see IBM Accessibility.

How to send your comments

Your feedback is important in helping us to provide accurate, high-quality information. If you have comments about this document or any other documentation for this product, send your comments to: compinfo@cn.ibm.com.

Be sure to include the name of the document, the publication number of the document, the version of the product, and, if applicable, the specific location (for example, page number or section heading) of the text that you are commenting on.

When you send information to IBM, you grant IBM a nonexclusive right to use or distribute the information in any way that IBM believes appropriate without incurring any obligation to you.

Part 1. COBOL language structure

© Copyright IBM Corp. 2021, 2025

Chapter 1. Characters

The most basic and indivisible unit of the COBOL language is the *character*. The basic character set includes the letters of the Latin alphabet, digits, and special characters.

In the COBOL language, individual characters are joined to form *character-strings* and *separators*. Character-strings and separators, then, are used to form the words, literals, phrases, clauses, statements, and sentences that form the language.

The basic characters used in forming character-strings and separators in source code are shown in Table 1 on page 3.

For certain language elements, the basic character set is extended with the following character sets, depending on the *code page* used at compile time:

- The ASCII Double-Byte Character Set (DBCS). DBCS characters occupy 2 adjacent bytes to represent one character. Characters represented in multiple bytes in source code (including DBCS characters) are referred to in this document as *multibyte characters*. A character-string containing only DBCS characters is also called a *DBCS character-string* or *double-byte character string*.
- UTF-8, an encoding form of the Unicode character set. UTF-8 characters occupy one-to-four bytes per character. UTF-8 characters that occupy 2 or more bytes are referred to in this document as *multibyte characters*.
- Extended UNIX Code (EUC). EUC characters occupy 1 byte to 4 bytes per character (or 1 byte to 3 bytes, depending on the code page). EUC characters that occupy 2 or more bytes are referred to in this document as *multibyte characters.*

Multibyte characters can be used in forming user-defined words.

The content of alphanumeric literals, comment lines, and comment entries can include any of the characters in the computer's compile-time character set, and can include both single-byte and multibyte characters.

Runtime data can include any characters from the runtime character set of the computer. The runtime character set of the computer can include alphanumeric characters, multibyte characters, and national characters. National characters are represented in UTF-16, a 16-bit encoding form of Unicode.

When the NSYMBOL (NATIONAL) compiler option is in effect, literals identified by the opening delimiter N" or N' are national literals and can contain any single-byte or multibyte characters, or both, that are valid for the compile-time code page. Characters contained in national literals are represented as national characters at run time.

For details, see “User-defined words with multibyte characters” on page 12, “DBCS literals” on page 32, and “National literals” on page 34.

Table 1. ***Basic COBOL character set****.* This table lists basic COBOL character set.

Character	Meaning	Use	Example
	Space	Punctuation character	`01 WS-A PIC X(10).`
+	Plus sign	Arithmetic operator	`COMPUTE WS-A = WS-B + WS-C.`
		Editing character	`01 WS-A PIC +9(3).`

© Copyright IBM Corp. 2021, 2025

*Table 1. **Basic COBOL character set**. This table lists basic COBOL character set. (continued)*			
Character	**Meaning**	**Use**	**Example**
-	Minus sign or hyphen	Arithmetic operator	`COMPUTE WS-A = WS-B - WS-C.`
		Editing character	`01 WS-A PIC -9(3).`
		Continuation character	`  01 WS-VAR  PIC X(27) VALUE -      'THIS MULTI-LINE TEXT'.`
		COBOL word element	`01 WS-A PIC 9(3).`
*	Asterisk	Arithmetic operator	`COMPUTE WS-A = WS-B * WS-C.`
		Editing character	`01 WS-A PIC **9.`
		Comment character	`* THIS IS COMMENT LINE.`
/	Forward slash or solidus	Arithmetic operator	`COMPUTE WS-A = WS-B / WS-C.`
		Editing character	`01 WS-DATE PIC 99/99/99.`
		Continuation character	`/01 WS-VAR  PIC X(27) VALUE /     'THIS MULTI-LINE TEXT'.`
=	Equal sign	Assignment character	`COMPUTE WS-A = WS-B / WS-C.`
		Relation character	`IF WS-A = 10`
$	Currency sign	Editing character	`01 WS-DATE PIC $$99.`
,	Comma	Editing character	`01 WS-DATE PIC 99,999.`
		Punctuation character	`MOVE 10 TO WS-A, WS-B.`
;	Semicolon	Punctuation character	`MOVE 10 TO WS-A; WS-B.`

*Table 1. **Basic COBOL character set**.* This table lists basic COBOL character set. *(continued)*			
Character	**Meaning**	**Use**	**Example**
.	Decimal point or period	Editing character	`01 WS-DATE PIC 99.999.`
		Punctuation character	`MOVE 10 TO WS-A, WS-B.`
"	Quotation mark	Punctuation character	`01 WS-VAR PIC X(5) VALUE "HELLO".`
'	Apostrophe	Punctuation character	`01 WS-VAR PIC X(5) VALUE 'HELLO'.`
(	Left parenthesis	Punctuation character	`IF (WS-A = 10) AND (WS-B = 5)`
)	Right parenthesis	Punctuation character	`IF (WS-A = 10) AND (WS-B = 5)`
>	Greater than	Relation character	`IF WS-A > 10`
<	Less than	Relation character	`IF WS-A < 10`
:	Colon	Relation character	`MOVE WS-VAR(1:10) TO WS-VAR1.`
_	Underscore	User-defined word element	`01 WS_VAR PIC X(10).`
A - Z	Alphabet (uppercase)	Alphabetic characters	/
a - z	Alphabet (lowercase)	Alphabetic characters	/
0 - 9	Numeric characters	Numeric characters	/

Chapter 2. Character sets and code pages

A *character set* is a set of letters, numbers, special characters, and other elements used to represent information. The term *code page* refers to a coded character set.

A character set is independent of a coded representation. A *coded character set* is the coded representation of a set of characters, where each character is assigned a numerical position, called a *code point*, in the encoding scheme. ASCII and EBCDIC are examples of types of coded character sets. Each variation of ASCII or EBCDIC is a specific coded character set.

Each code page that IBM defines is identified by a *code page name*, for example IBM-1252, and a *coded character set identifier* (CCSID), for example 1252.

Compile-time code page

The compile-time code page can be an ASCII single-byte or ASCII double-byte code page, an EUC code page, or UTF-8. The specific code page is indicated by the compile-time locale, or environment variable in effect.

The source program (including user-defined words and the content of alphanumeric, DBCS, and national literals) is encoded in the code page indicated by the locale or environment variable in effect at compile time.

Runtime code page

The code page used at run time is determined by a combination of a data item's USAGE clause, the compiler options in effect, and the locale (or environment variable value) in effect.

When the CHAR(NATIVE) compiler option is in effect, data items described with USAGE DISPLAY or USAGE DISPLAY-1 are encoded in an ASCII, EUC, or UTF-8 code page as indicated by the runtime locale.

When the CHAR(EBCDIC) compiler option is in effect, data items described with USAGE DISPLAY or USAGE DISPLAY-1 are encoded in an EBCDIC code page, except when the NATIVE phrase is specified in the item's USAGE clause. If the NATIVE phrase is specified, the code page used is the ASCII, EUC, or UTF-8 code page indicated by the runtime locale.

For EBCDIC, the code page is determined from the EBCDIC_CODEPAGE environment variable, if set. If the EBCDIC_CODEPAGE environment variable is not set, the default EBCDIC code page associated with the current runtime locale is used. The default EBCDIC code page associated with each supported locale is identified in *Locales and code pages that are supported* in the *COBOL for Linux on x86 Programming Guide*.

For DBCS, the code page is determined by the DBCS_CODEPAGE environment variable, if set. If the DBCS_CODEPAGE environment variable is not set, the default DBCS codepage associated with the current runtime locale is used.

The default code page for data items described with USAGE NATIONAL and national literals is UTF-16LE (little endian), CCSID 1200. The source text representation of national literals is converted at run time from the compile-time code page to UTF-16LE.

To change the endianness representation for data items described with USAGE NATIONAL and national literals refer to the UTF16 compiler option.

A reference to *UTF-16* in this document is a reference to UTF-16LE.

Character encoding units

A *character encoding unit* (or *encoding unit*) is the unit of data that COBOL treats as a single character at run time. In this information, the terms *character* and *character position* refer to a single encoding unit.

The size of an encoding unit for data items and literals depends on the USAGE clause of the data item or the category of the literal as follows:

© Copyright IBM Corp. 2021, 2025

- For data items described with USAGE DISPLAY and for alphanumeric literals, an encoding unit is 1 byte, regardless of the code page used and regardless of the number of bytes used to represent a given *graphic character*.
- For data items described with USAGE DISPLAY-1 (DBCS data items) and for DBCS literals, an encoding unit is 2 bytes.
- For data items described with USAGE NATIONAL and for national literals, an encoding unit is 2 bytes.

The relationship between a graphic character and an encoding unit depends on the type of code page used for the data item or literal. See the following types of runtime code pages:

- Single-byte ASCII or EBCDIC
- Multibyte ASCII-based (ASCII DBCS, EUC, or UTF-8) or multibyte EBCDIC DBCS
- Unicode UTF-16

See the following sections for the details of each type of code page.

Also see the section *Specifying the code page for character data* in the *COBOL for Linux on x86 Programming Guide*.

Single-byte code pages

You can use a single-byte code page in data items described with USAGE DISPLAY and in literals of category alphanumeric. An encoding unit is 1 byte and each graphic character is represented in 1 byte. For these data items and literals, you need not be concerned with encoding units.

Multibyte code pages

USAGE DISPLAY

You can use data encoded in a multibyte ASCII-based or EBCDIC code page in data items described with USAGE DISPLAY (category alphanumeric) and in literals of category alphanumeric. An encoding unit is 1 byte and the size of a graphic character varies from 1 byte to 4 bytes, depending on the code page.

When alphanumeric data items or literals contain multibyte data, programmers are responsible for ensuring that operations do not unintentionally separate the multiple encoding units that form a graphic character. Care should be taken with reference modification, and truncation during moves should be avoided. The COBOL runtime system does not check for a split between the encoding units that form a graphic character.

To avoid problems, you can convert alphanumeric literals and data items described with usage DISPLAY to national data (UTF-16) by moving the data items or literals to data items described with usage NATIONAL or by using the NATIONAL-OF intrinsic function. You can then perform operations on the national data with less concern for splitting graphic characters. You can convert the data back to USAGE DISPLAY by using the DISPLAY-OF intrinsic function.

When the source data that you convert is UTF-8, you need to be concerned about splitting graphic characters in the target usage NATIONAL data item because the resulting national data might contain UTF-16 surrogate pairs or combining character sequences as described in “Unicode UTF-16” on page 9.

USAGE DISPLAY-1

You can use double-byte characters of a multibyte ASCII DBCS or EBCDIC DBCS code page in data items described with USAGE DISPLAY-1 and in literals of category DBCS. An encoding unit is 2 bytes and each graphic character is represented in a single 2-byte encoding unit. For these data items and literals, you need not be concerned with encoding units.

You cannot use UTF-8 or EUC in data items described with USAGE DISPLAY-1.

Unicode UTF-16

You can use UTF-16 in data items described with USAGE NATIONAL. National literals are stored as UTF-16 characters regardless of the code page used for the source program. An encoding unit for data items of usage NATIONAL and national literals is 2 bytes.

For most of the characters in UTF-16, a graphic character is one encoding unit. Characters converted to UTF-16 from an EBCDIC, ASCII, or EUC code page are represented in one UTF-16 encoding unit. Some of the other graphic characters in UTF-16 are represented by a *surrogate pair* or a *combining character sequence*. A surrogate pair consists of two encoding units (4 bytes). A combining character sequence consists of a base character and one or more *combining marks* or a sequence of one or more combining marks (4 bytes or more, in 2-byte increments). In data items of usage NATIONAL, each 2-byte encoding unit is treated as a character.

When national data contains surrogate pairs or combining character sequences, programmers are responsible for ensuring that operations on national characters do not unintentionally separate the multiple encoding units that form a graphic character. Care should be taken with reference modification, and truncation during moves should be avoided. The COBOL runtime system does not check for a split between the encoding units that form a graphic character.

Chapter 3. Character-strings

A *character-string* is a character or a sequence of contiguous characters that forms a COBOL word, a literal, a PICTURE character-string, or a comment-entry. A character-string is delimited by separators.

A *separator* is a string of contiguous characters used to delimit character strings. Separators are described in detail under Chapter 4, “Separators,” on page 39.

Character strings and certain separators form *text words*. A text word is a character or a sequence of contiguous characters (possibly continued across lines) between character positions 8 and 72 in fixed source format, or positions 8 and 252 in extended source format inclusive in source text, library text, or pseudo-text. For more information about pseudo-text, see “Pseudo-text” on page 51.

Source text, library text, and pseudo-text can be written in single-byte characters and, for some character-strings, multibyte characters of the ASCII, UTF-8, or EUC code page indicated by the compile-time locale.

You can use single-byte and multibyte character-strings to form the following items:

- COBOL words
- Literals
- Comment text

You can use only single-byte characters to form PICTURE character-strings.

COBOL words with single-byte characters

A COBOL *word* is a character-string that forms a user-defined word, a system-name, or a reserved word. The maximum size of a COBOL user-defined word is 30 bytes. The number of characters that can be specified depends on the code page indicated by the compile-time locale.

Except for arithmetic operators and relation characters, each character of a COBOL word is selected from the following set:

- Latin uppercase letters A through Z
- Latin lowercase letters a through z
- digits 0 through 9
- - (hyphen)
- _ (underscore)

The hyphen cannot appear as the first or last character in such words. The underscore cannot appear as the first character in such words. Most user-defined words (all except section-names, paragraph-names, priority-numbers, and level-numbers) must contain at least one alphabetic character. Priority numbers and level numbers need not be unique; a given specification of a priority-number or level-number can be identical to any other priority-number or level-number.

In COBOL words (but not in the content of alphanumeric, DBCS, and national), each lowercase single-byte alphabetic letter is considered to be equivalent to its corresponding single-byte uppercase alphabetic letter.

The following rules apply for all COBOL words:

- A reserved word cannot be used as a user-defined word or as a system-name.
- The same COBOL word, however, can be used as both a user-defined word and as a system-name. The classification of a specific occurrence of a COBOL word is determined by the context of the clause or phrase in which it occurs.

© Copyright IBM Corp. 2021, 2025

User-defined words with multibyte characters

When used in the context of user-defined words, the term *multibyte* refers to three types of words.

The three types of words are:

- Words formed of DBCS characters, possibly combined with single-byte characters
- Words formed of UTF-8 characters that are composed of one or more bytes
- Words formed of EUC characters that are composed of one or more bytes

These are the rules for forming user-defined words with multibyte characters:

Contained characters
A user-defined word can consist of both single-byte and multibyte characters. If a character exists in both single-byte and multibyte forms, its single-byte and multibyte representations are not equivalent.

The single-byte characters in the user-defined word are limited to the following characters:

- Latin letters uppercase A through Z
- Latin letters lowercase a through z
- digits 0 through 9
- - (hyphen)
- _ (underscore)

The single-byte encoded hyphen cannot appear as the first or last character in such words.

The single-byte encoded underscore cannot appear as the first character in such words.

Uppercase and lowercase letters
In COBOL words, each lowercase single-byte encoded character "a" through "z" is considered to be equivalent to its corresponding single-byte encoded uppercase character. Multibyte-encoded uppercase and lowercase letters are not equivalent.

Value range
Valid value ranges for multibyte characters depend on the specific code page being used.

Maximum length
30 bytes. The number of characters that you can specify in 30 bytes varies depending on the source code page and the characters used in the user-defined word.

Continuation
Words formed with multibyte characters cannot be continued across lines.

Use of shift-out and shift-in characters
Applicable only when the dummy shift-out/shift-in (SOSI) compiler option is in effect. See *SOSI* in the *COBOL for Linux on x86 Programming Guide* for details of the SOSI compiler option.

User-defined words

A user-defined word is a COBOL word that must be supplied by the user to satisfy the format of a clause or statement.

The following sets of user-defined words are supported. The second column indicates whether multibyte characters are allowed in words of a given set.

User-defined word	Multibyte characters allowed?
Alphabet-name	Yes
Assignment-name	No
Class-name (of data)	Yes

User-defined word	Multibyte characters allowed?
Condition-name	Yes
Data-name	Yes
File-name	Yes
Index-name	Yes
Level-numbers: 01–49, 66, 77, 88	No
Library-name	No
Mnemonic-name	Yes
Paragraph-name	Yes
Priority-numbers: 00–99	No
Program-name	No
Record-name	Yes
Record-key-name **Restriction:** *record-key-name* is supported for STL file system only.	Yes
Section-name	Yes
Symbolic-character	Yes
Text-name	No

The maximum length of a user-defined word is 30 bytes, except for level-numbers and priority-numbers. Level-numbers and priority numbers must each be a one-digit or two-digit integer.

A given user-defined word can belong to only one of these sets, except that a given number can be both a priority-number and a level-number. Each user-defined word within a set must be unique, except for priority-numbers and level-numbers and except as specified in Chapter 8, “Referencing data names, copy libraries, and PROCEDURE DIVISION names,” on page 57.

The following types of user-defined words can be referenced by statements and entries in the program in which the user-defined word is declared:

- Paragraph-name
- Section-name

The following types of user-defined words can be referenced by any COBOL program, provided that the compiling system supports the associated library or other system and that the entities referenced are known to that system:

- Library-name
- Text-name

The following types of names, when they are declared within a configuration section, can be referenced by statements and entries in the program that contains the configuration section or in any program contained within that program:

- Alphabet-name
- Condition-name
- Mnemonic-name
- Symbolic-character

The function of each user-defined word is described in the clause or statement in which it appears.

Related references
"Context-sensitive words" on page 635

System-names

A *system-name* is a character string that has a specific meaning to the system.

There are three types of system-names:

- Computer-name
- Language-name
- Implementor-name

There are types of implementer-names:

- Environment-name
- External-class-name
- Assignment-name

The meaning of each system-name is described with the format in which it appears.

Multibyte character-strings are allowed for system-names.

Function-names

A *function-name* specifies the mechanism provided to determine the value of an intrinsic function.

The same word, in a different context, can appear in a program as a user-defined word or a system-name. For a list of function-names and their definitions, see Table 59 on page 434.

Reserved words

A *reserved word* is a character-string with a predefined meaning in a COBOL source unit.

Reserved words are listed in "Reserved words" on page 619. There are five types of reserved words:

- Keywords
- Optional words
- Figurative constants
- Special character words
- Special registers

Keywords
Keywords are reserved words that are required within a given clause, entry, or statement. Within each format, such words appear in uppercase on the main path.

Optional words
Optional words are reserved words that can be included in the format of a clause, entry, or statement in order to improve readability. They have no effect on the execution of the program.

Figurative constants
See "Figurative constants" on page 15.

Special character words
There are five types of *special character words*, which are recognized as special characters only when represented in single-byte characters:

- **Arithmetic operators:** + - / * **

  See "Arithmetic expressions" on page 235.

- **Relational operators**: < > = <= >=

See “Conditional expressions” on page 240.

- **Floating comment indicators**: *>

  See “Floating comment indicators (*>)” on page 50.

- **Pseudo-text delimiters in COPY and REPLACE statements**: ==

  See “COPY statement” on page 564 and “REPLACE statement” on page 575.

- **Compiler directive indicators**: >>

  See Chapter 84, “Compiler directives,” on page 585.

Special registers
See “Special registers” on page 17.

Figurative constants

Figurative constants are reserved words that name and refer to specific constant values. The reserved words for figurative constants and their meanings are listed in this section.

ZERO, ZEROS, ZEROES
Represents the numeric value zero (0), one or more occurrences of the alphanumeric character zero, or the Boolean value B"0", depending on context.

When the figurative constant ZERO, ZEROS, or ZEROES is used in a context that requires an alphanumeric character, an alphanumeric character zero is used. When the context requires a national character zero, a national character zero is used (value NX'3000'). When the context cannot be determined, an alphanumeric character zero is used.

SPACE, SPACES
Represents one or more blanks or spaces. SPACE is treated as an alphanumeric literal when used in a context that requires an alphanumeric character, as a DBCS literal when used in a context that requires a DBCS character, as a national literal when used in a context that requires a national character.

HIGH-VALUE, HIGH-VALUES
Represents one or more occurrences of the character that has the highest ordinal position in the collating sequence used.

HIGH-VALUE is treated as an alphanumeric literal in a context that requires an alphanumeric character. For alphanumeric data with the EBCDIC collating sequence, the value is X'FF'. For other alphanumeric data, the value depends on the collating sequence indicated by the locale. For more information about locales, see “Locale considerations” on page 635.

HIGH-VALUE is treated as a national literal when used in a context that requires a national literal. The value is national character NX'FFFF'. HIGH-VALUE can be used in a context that requires a national literal only when the NCOLLSEQ(BIN) compiler option is in effect.

When the context cannot be determined, an alphanumeric context is assumed and the value X'FF' is used.

Usage note: You should not use HIGH-VALUE (or a value assigned from HIGH-VALUE) in a way that results in conversion between one data representation and another. X'FF' does not represent a valid EBCDIC or ASCII character, and NX'FFFF' does not represent a valid national character. Conversion of either the alphanumeric or the national HIGH-VALUE representation to another representation results in a substitution character. For example, conversion of X'FF' to UTF-16 would give a substitution character, not NX'FFFF'.

LOW-VALUE, LOW-VALUES
Represents one or more occurrences of the character that has the lowest ordinal position in the collating sequence used.

LOW-VALUE is treated as an alphanumeric literal in a context that requires an alphanumeric character. For alphanumeric data with the EBCDIC collating sequence, the value is X'00'. For other alphanumeric

data, the value depends on the collating sequence indicated by the locale. For more information about locales, see "Locale considerations" on page 635.

LOW-VALUE is treated as a national literal when used in a context that requires a national literal. The value is national character NX'0000'. LOW-VALUE can be used in a context that requires a national literal only when the NCOLLSEQ(BIN) compiler option is in effect.

When the context cannot be determined, an alphanumeric context is assumed and the value X'00' is used.

QUOTE, QUOTES

Represents one or more occurrences of:

- The quotation mark character (`"`), if the QUOTE compiler option is in effect
- The apostrophe character (`'`), if the APOST compiler option is in effect

QUOTE or QUOTES represents an alphanumeric character when used in a context that requires an alphanumeric character, represents a national character when used in a context that requires a national character. The national character value of quotation mark is NX'2200'. The national character value of apostrophe is NX'2700'.

QUOTE and QUOTES cannot be used in place of a quotation mark or an apostrophe to enclose an alphanumeric literal.

ALL *literal*

literal can be an alphanumeric literal, a DBCS literal, a national literal, or a figurative constant other than the ALL literal.

When *literal* is not a figurative constant, ALL *literal* represents one or more occurrences of the string of characters that compose the literal.

When *literal* is a figurative constant, the word ALL has no meaning and is used only for readability.

The figurative constant ALL *literal* must not be used with the CALL, INSPECT, STOP, or STRING statements.

symbolic-character

Represents one or more of the characters specified as a value of the *symbolic-character* in the SYMBOLIC CHARACTERS clause of the SPECIAL-NAMES paragraph.

symbolic-character always represents an alphanumeric character; it can be used in a context that requires a national character only when implicit conversion of alphanumeric to national characters is defined. (It can be used, for example, in a MOVE statement where the receiving item is of class national because implicit conversion is defined when the sending item is alphanumeric and the receiving item is national .)

You cannot specify the SYMBOLIC CHARACTERS clause if a multibyte codepage is indicated by the compile-time locale setting. For more information about locales, see "Locale considerations" on page 635.

NULL, NULLS

Represents a value used to indicate that data items defined with USAGE POINTER, USAGE PROCEDURE-POINTER, USAGE FUNCTION-POINTER, or the ADDRESS OF special register do not contain a valid address. NULL can be used only where explicitly allowed in the syntax formats. NULL has the value zero.

The singular and plural forms of NULL, ZERO, SPACE, HIGH-VALUE, LOW-VALUE, and QUOTE can be used interchangeably. For example, if `DATA-NAME-1` is a five-character data item, each of the following statements moves five spaces to `DATA-NAME-1`:

```
MOVE SPACE       TO  DATA-NAME-1
MOVE SPACES      TO  DATA-NAME-1
MOVE ALL SPACES  TO  DATA-NAME-1
```

When the rules of COBOL permit any one spelling of a figurative constant name, any alternative spelling of that figurative constant name can be specified.

You can use a figurative constant wherever *literal* appears in a syntax diagram, except where explicitly prohibited. When a numeric literal appears in a syntax diagram, only the figurative constant ZERO (or ZEROS or ZEROES) can be used. Figurative constants are not allowed as function arguments except in an arithmetic expression, where the expression is an argument to a function where the expression is an argument to a function. The figurative constant ZERO can be used as a Boolean literal.

The length of a figurative constant depends on the context of its use. The following rules apply:

- When a figurative constant is specified in a VALUE clause or associated with a data item (for example, when it is moved to or compared with another item), the length of the figurative constant character-string is equal to 1 or the number of character positions in the associated data item, whichever is greater.
- When a figurative constant, other than the ALL literal, is not associated with another data item (for example, in a CALL, STOP, STRING, or UNSTRING statement), the length of the character-string is one character.

Special registers

Special registers are reserved words that name storage areas generated by the compiler. Their primary use is to store information produced through specific COBOL features. Each such storage area has a fixed name, and must not be defined within the program.

For programs with the RECURSIVE attribute, storage for the following special registers is allocated on a per-invocation basis:

- ADDRESS OF
- RETURN-CODE
- SORT-CONTROL
- SORT-CORE-SIZE
- SORT-FILE-SIZE
- SORT-MESSAGE
- SORT-MODE-SIZE
- SORT-RETURN
- TALLY
- XML-CODE
- XML-EVENT
- XML-NTEXT
- XML-TEXT

For the first call to a program after a cancel of that program, the compiler initializes the special register fields to their initial values.

For the following two cases:

- Programs that have the INITIAL clause specified
- Programs that have the RECURSIVE clause specified

the following special registers are reset to their initial value on each program entry:

- RETURN-CODE
- SORT-CONTROL
- SORT-CORE-SIZE
- SORT-FILE-SIZE

- SORT-MESSAGE
- SORT-MODE-SIZE
- SORT-RETURN
- TALLY
- XML-CODE
- XML-EVENT

Further, in the above two cases, values set in ADDRESS OF special registers persist only for the span of the particular program invocation.

In all other cases, the special registers will not be reset; they will be unchanged from the value contained on the previous CALL.

Unless otherwise explicitly restricted, a special register can be used wherever a data-name or identifier that has the same definition as the implicit definition of the special register can be used. Implicit definitions, if applicable, are given in the specification of each special register.

You can specify an alphanumeric special register in a function wherever an alphanumeric argument to a function is allowed, unless specifically prohibited.

If qualification is allowed, special registers can be qualified as necessary to provide uniqueness. (For more information, see "Qualification" on page 57.)

ADDRESS OF

The ADDRESS OF special register references the address of a data item in the LINKAGE SECTION, the LOCAL-STORAGE SECTION, or the WORKING-STORAGE SECTION.

For 01 and 77 level items in the LINKAGE SECTION, the ADDRESS OF special register can be used as either a sending item or a receiving item. For all other operands, the ADDRESS OF special register can be used only as a sending item.

The ADDRESS OF special register is implicitly defined as USAGE POINTER.

A function-identifier is not allowed as the operand of the ADDRESS OF special register.

DEBUG-ITEM

The DEBUG-ITEM special register provides information for a debugging declarative procedure about the conditions that cause debugging section execution.

DEBUG-ITEM has the following implicit description:

```
01  DEBUG-ITEM.
    02   DEBUG-LINE     PICTURE IS X(6).
    02   FILLER         PICTURE IS X  VALUE SPACE.
    02   DEBUG-NAME     PICTURE IS X(30).
    02   FILLER         PICTURE IS X  VALUE SPACE.
    02   DEBUG-SUB-1    PICTURE IS S9999  SIGN IS LEADING SEPARATE CHARACTER.
    02   FILLER         PICTURE IS X  VALUE SPACE.
    02   DEBUG-SUB-2    PICTURE IS S9999  SIGN IS LEADING SEPARATE CHARACTER.
    02   FILLER         PICTURE IS X  VALUE SPACE.
    02   DEBUG-SUB-3    PICTURE IS S9999  SIGN IS LEADING SEPARATE CHARACTER.
    02   FILLER         PICTURE IS X  VALUE SPACE.
    02   DEBUG-CONTENTS PICTURE IS X(n).
```

Before each debugging section is executed, DEBUG-ITEM is filled with spaces. The contents of the DEBUG-ITEM subfields are updated according to the rules for the MOVE statement, with one exception: DEBUG-CONTENTS is updated as if the move were an alphanumeric-to-alphanumeric elementary move without conversion of data from one form of internal representation to another.

After updating, the contents of the DEBUG-ITEM subfields are:

DEBUG-LINE
The source-statement sequence number (or the compiler-generated sequence number, depending on the compiler option chosen) that caused execution of the debugging section.

DEBUG-NAME
The first 30 characters of the name that caused execution of the debugging section. Any qualifiers are separated by the word 'OF'.

DEBUG-SUB-1, DEBUG-SUB-2, DEBUG-SUB-3
Always set to spaces. These subfields are documented for compatibility with previous COBOL products.

DEBUG-CONTENTS
Data is moved into DEBUG-CONTENTS, as shown in the following table.

Table 2. ***DEBUG-ITEM subfield contents***

Cause of debugging section execution	Statement referred to in DEBUG-LINE	Contents of DEBUG-NAME	Contents of DEBUG-CONTENTS
procedure-name-1 ALTER reference	ALTER statement	*procedure-name-1*	*procedure-name-n* in TO PROCEED TO phrase
GO TO *procedure-name-n*	GO TO statement	*procedure-name-n*	Spaces
procedure-name-n in SORT or MERGE input/output procedure	SORT or MERGE statement	*procedure-name-n*	"SORT INPUT", "SORT OUTPUT", or "MERGE OUTPUT" (as applicable)
PERFORM statement transfer of control	This PERFORM statement	*procedure-name-n*	"PERFORM LOOP"
procedure-name-n in a USE procedure	Statement causing USE procedure execution	*procedure-name-n*	"USE PROCEDURE"
Implicit transfer from a previous sequential procedure	Previous statement executed in previous sequential procedure[1]	*procedure-name-n*	"FALL THROUGH"
First execution of first nondeclarative procedure	Line number of first nondeclarative procedure-name	Name of first nondeclarative procedure	"START PROGRAM"

1. If this procedure is preceded by a section header, and control is passed through the section header, the statement number refers to the section header.

FORMAT OF

The FORMAT OF phrase of the PROCEDURE DIVISION creates an implicit special register, called the FORMAT OF special register, whose contents equal the FORMAT literal of the data item referenced by the identifier.

The FORMAT OF special register can only be specified for data items of class date-time. The length of this special register depends on the literal or locale specified in the FORMAT phrase for the data item.

The FORMAT OF special register has the implicit definition:

```
USAGE DISPLAY, PICTURE X(n)
where n equals the number of bytes of the implicit or explicit
FORMAT literal.
```

For example, consider the following data description entry for date data item `date2`:

```
05 date2 FORMAT DATE IS '%d,%m,%y'.
```

The following MOVE statement uses the intrinsic function CONVERT-DATE-TIME to convert date data item `date3` into the format of date data item `date2`. The FORMAT OF phrase creates an implicit special register whose content would be `%d,%m,%y`.

```
MOVE FUNCTION CONVERT-DATE-TIME(date3, DATE, FORMAT OF date2)
          TO alpha-num-date.
```

The length of the special register in this example is 8.

The following rules apply:

- The FORMAT OF special register cannot be modified, and can only be specified in the PROCEDURE DIVISION, where a FORMAT non-numeric literal is allowed.
- A separate FORMAT OF special register exists for each identifier referenced with the FORMAT OF phrase

LENGTH OF

The LENGTH OF special register contains the number of bytes used by a data item.

LENGTH OF creates an implicit special register that contains the current byte length of the data item referenced by the identifier.

For data items described with usage DISPLAY-1 (DBCS data items) and data items described with usage NATIONAL, each character occupies 2 bytes of storage.

LENGTH OF can be used in the PROCEDURE DIVISION anywhere a numeric data item that has the same definition as the implied definition of the LENGTH OF special register can be used.

When the ADDR(32) compiler option is specified the LENGTH OF special register has the implicit definition:

```
USAGE IS BINARY PICTURE 9(9).
```

When the ADDR(64) compiler option is specified the LENGTH OF special register has the implicit definition:

```
USAGE IS BINARY PICTURE 9(18).
```

If the data item referenced by the identifier contains the GLOBAL clause, the LENGTH OF special register is a global data item.

The LENGTH OF special register can appear within either the starting character position or the length expressions of a reference-modification specification. However, the LENGTH OF special register cannot be applied to any operand that is reference-modified.

The LENGTH OF operand cannot be a function, but the LENGTH OF special register is allowed in a function where an integer argument is allowed.

If the LENGTH OF special register is used as the argument to the LENGTH function, the result is always 4 when the **ADDR(32)** compiler option is specified or always 8 when the **ADDR(64)** compiler option is specified, independent of the argument specified for LENGTH OF.

If the ADDRESS OF special register is used as the argument to the LENGTH function, the result is always 4 when the **ADDR(32)** compiler option is specified or always 8 when the **ADDR(64)** compiler option is specified, independent of the argument specified for ADDRESS OF.

LENGTH OF cannot be either of the following items:

- A receiving data item
- A subscript

When the LENGTH OF special register is used as a parameter on a CALL statement, it must be passed BY CONTENT or BY VALUE.

When a table element is specified, the LENGTH OF special register contains the length in bytes of one occurrence. When referring to a table element, the element name need not be subscripted.

A value is returned for any identifier whose length can be determined, even if the area referenced by the identifier is currently not available to the program.

A separate LENGTH OF special register exists for each identifier referenced with the LENGTH OF phrase. For example:

```
MOVE LENGTH OF A TO B
DISPLAY LENGTH OF A, A
ADD LENGTH OF A TO B
CALL "PROGX" USING BY REFERENCE A BY CONTENT LENGTH OF A
```

The intrinsic function LENGTH can also be used to obtain the length of a data item. For data items of usage NATIONAL, the length returned by the LENGTH function is the number of national character positions, rather than bytes; thus the LENGTH OF special register and the LENGTH intrinsic function have different results for data items of usage NATIONAL. For all other data items, the result is the same.

The LENGTH intrinsic function, when applied to a null-terminated alphanumeric literal, returns the number of bytes in the literal prior to but not including the terminating null. (The LENGTH special register does not support literal operands.) For details about null-terminated alphanumeric literals, see "Null-terminated alphanumeric literals" on page 31.

LINAGE-COUNTER

A separate LINAGE-COUNTER special register is generated for each FD entry that contains a LINAGE clause. When more than one is generated, you must qualify each reference to a LINAGE-COUNTER with its related file-name.

The implicit description of the LINAGE-COUNTER special register is in one of the following cases:

- If the LINAGE clause specifies a data-name, LINAGE-COUNTER has the same PICTURE and USAGE as that data-name.
- If the LINAGE clause specifies an integer, LINAGE-COUNTER is a binary item with the same number of digits as that integer.

For more information, see "LINAGE clause" on page 159.

The value in LINAGE-COUNTER at any given time is the line number at which the device is positioned within the current page. LINAGE-COUNTER can be referred to in PROCEDURE DIVISION statements; it must not be modified by them.

LINAGE-COUNTER is initialized to 1 when an OPEN statement for its associated file is executed.

LINAGE-COUNTER is automatically modified by any WRITE statement for this file. (See "WRITE statement" on page 401.)

If the file description entry for a sequential file contains the LINAGE clause and the EXTERNAL clause, the LINAGE-COUNTER data item is an external data item. If the file description entry for a sequential file contains the LINAGE clause and the GLOBAL clause, the LINAGE-COUNTER data item is a global data item.

You can specify the LINAGE-COUNTER special register wherever an integer argument to a function is allowed.

LOCALE OF

The LOCALE OF special register returns the equivalent of a locale mnemonic-name associated with the specified data item.

If the data item does not have a locale associated with it, the keyword COBOL is returned. The LOCALE OF special register cannot be modified, and can only be specified in the PROCEDURE DIVISION where a locale mnemonic-name is allowed.

A date-time data item can be used in expressions using the LOCALE OF special register.

RETURN-CODE

The RETURN-CODE special register can be used to pass a return code to the calling program or operating system when the current COBOL program ends.

When a COBOL program ends:

- If control returns to the operating system, the value of the RETURN-CODE special register is passed to the operating system as a user return code. The supported user return code values are determined by the operating system, and might not include the full range of RETURN-CODE special register values. For information about user return code values under Linux, see *Getting feedback from date and time callable services* in the *COBOL for Linux on x86 Programming Guide*.
- If control returns to a calling program, the value of the RETURN-CODE special register is passed to the calling program. If the calling program is a COBOL program, the RETURN-CODE special register in the calling program is set to the value of the RETURN-CODE special register in the called program.

The RETURN-CODE special register has the implicit definition:

```
01  RETURN-CODE GLOBAL PICTURE S9(4) USAGE BINARY VALUE ZERO.
```

When used in nested programs, this special register is implicitly defined with the GLOBAL clause in the outermost program.

The following examples show how to set the RETURN-CODE special register:

- `COMPUTE RETURN-CODE = 8.`
- `MOVE 8 to RETURN-CODE.`

The RETURN-CODE special register does not return a value from a program that uses CALL ... RETURNING. For more information, see "CALL statement" on page 286.

You can specify the RETURN-CODE special register in a function wherever an integer argument is allowed.

The RETURN-CODE special register does not return information from a date/time callable service. For more information, see *Manipulating dates and time* in the *COBOL for Linux on x86 Programming Guide*.

SHIFT-OUT and SHIFT-IN

You can specify the SHIFT-OUT and SHIFT-IN special registers in a function wherever an alphanumeric argument is allowed.

The SHIFT-OUT and SHIFT-IN special registers are supported only when compiling with the CHAR(EBCDIC) compiler option. However, their values are not recognized as delimiters for double-byte characters in the code pages supported for COBOL for Linux.

The SHIFT-OUT and SHIFT-IN special registers are implicitly defined as alphanumeric data items of the format:

```
01  SHIFT-OUT GLOBAL PICTURE X(1) USAGE DISPLAY VALUE X"0E".
01  SHIFT-IN  GLOBAL PICTURE X(1) USAGE DISPLAY VALUE X"0F".
```

When used in nested programs, these special registers are implicitly defined with the global attribute in the outermost program.

These special registers represent EBCDIC shift-out and shift-in control characters, which are unprintable characters.

These special registers cannot be receiving items. SHIFT-OUT and SHIFT-IN cannot be used in place of the keyboard control characters when you are defining multibyte user-defined words or specifying EBCDIC DBCS literals.

SORT-CONTROL

The SORT-CONTROL special register is the name of an alphanumeric data item.

The SORT-CONTROL special register has the implicit definition:

```
01 SORT-CONTROL GLOBAL PICTURE X(160) VALUE "file name".
```

where "file name" is the file name used by the sort as the source for additional sort/merge options.

When used in nested programs, this special register is implicitly defined with the global attribute in the outermost program.

You can specify the SORT-CONTROL special register in a function wherever an alphanumeric argument is allowed.

The SORT-CONTROL special register is not necessary for a successful sorting or merging operation.

The sort control file takes precedence over the SORT special registers.

SORT-CORE-SIZE

The SORT-CORE-SIZE special register is the name of a binary data item that you can use to specify the number of bytes of storage available to the sort utility.

The SORT-CORE-SIZE special register has the implicit definition:

```
01  SORT-CORE-SIZE GLOBAL PICTURE S9(8) USAGE BINARY VALUE ZERO.
```

When used in nested programs, this special register is implicitly defined with the global attribute in the outermost program.

The amount of storage indicated in the SORT-CORE-SIZE special register does not include memory areas required by COBOL library functions not related to the SORT or MERGE function. It also does not include the fixed amount of memory areas (modules, control blocks, fixed-size work areas) required for the sort and merge implementation.

You can specify the SORT-CORE-SIZE special register in a function wherever an integer argument is allowed.

SORT-FILE-SIZE

The SORT-FILE-SIZE special register is the name of a binary data item that you can use to specify the estimated number of records in the sort input file, *file-name-1*.

The SORT-FILE-SIZE special register has the implicit definition:

```
01  SORT-FILE-SIZE GLOBAL PICTURE S9(8) USAGE BINARY VALUE ZERO.
```

When used in nested programs, this special register is implicitly defined with the global attribute in the outermost program.

References to the SORT-FILE-SIZE special register are resolved by the compiler; however, the value in the special register has no effect on the execution of a SORT or MERGE statement.

You can specify the SORT-FILE-SIZE special register in a function wherever an integer argument is allowed.

SORT-MESSAGE

The SORT-MESSAGE special register is the name of an alphanumeric data item that is available to both sort and merge programs.

References to the SORT-MESSAGE special register are resolved by the compiler; however, the value in the special register has no effect on the execution of a SORT or MERGE statement.

The SORT-MESSAGE special register has the implicit definition:

```
01  SORT-MESSAGE GLOBAL PICTURE X(8) USAGE DISPLAY VALUE "SYSOUT".
```

When used in nested programs, this special register is implicitly defined with the global attribute in the outermost program.

You can specify the SORT-MESSAGE special register in a function wherever an alphanumeric argument is allowed.

SORT-MODE-SIZE

The SORT-MODE-SIZE special register is the name of a binary data item that you can use to specify the length of variable-length records that occur most frequently.

The SORT-MODE-SIZE special register has the implicit definition:

```
01  SORT-MODE-SIZE GLOBAL PICTURE S9(5) USAGE BINARY VALUE ZERO.
```

When used in nested programs, this special register is implicitly defined with the global attribute in the outermost program.

References to the SORT-MODE-SIZE special register are resolved by the compiler; however, the value in the special register has no effect on the execution of a SORT or MERGE statement.

You can specify the SORT-MODE-SIZE special register in a function wherever an integer argument is allowed.

SORT-RETURN

The SORT-RETURN special register is the name of a binary data item and is available to both sort and merge programs.

The SORT-RETURN special register has the implicit definition:

```
01  SORT-RETURN GLOBAL PICTURE S9(4) USAGE BINARY VALUE ZERO.
```

When used in nested programs, this special register is implicitly defined with the global attribute in the outermost program.

The SORT-RETURN special register contains a return code of 0 (successful) or 16 (unsuccessful) at the completion of a sort or merge operation. If the sort or merge is unsuccessful and there is no reference to this special register anywhere in the program, a message is displayed on the terminal.

You can set the SORT-RETURN special register to 16 in an error declarative or input/output procedure to terminate a sort or merge operation before all records are processed. The operation is terminated on the next input or output function for the sort or merge operation.

You can specify the SORT-RETURN special register in a function wherever an integer argument is allowed.

TALLY

The TALLY special register is the name of a binary data item.

See the following definition of a binary data item:

```
01  TALLY GLOBAL PICTURE 9(5) USAGE BINARY VALUE ZERO.
```

When used in nested programs, this special register is implicitly defined with the global attribute in the outermost program.

You can refer to or modify the contents of TALLY.

You can specify the TALLY special register in a function wherever an integer argument is allowed.

WHEN-COMPILED

The WHEN-COMPILED special register contains the date at the start of the compilation.

WHEN-COMPILED is an alphanumeric data item that has the implicit definition:

```
01  WHEN-COMPILED GLOBAL PICTURE X(16) USAGE DISPLAY.
```

When used in nested programs, this special register is implicitly defined with the global attribute in the outermost program.

The WHEN-COMPILED special register has the format:

```
MM/DD/YYhh.mm.ss (MONTH/DAY/YEARhour.minute.second)
```

For example, if compilation began at 2:04 PM on 15 October 2007, WHEN-COMPILED would contain the value 10/15/0714.04.00.

WHEN-COMPILED can be used only as the sending field in a MOVE statement.

WHEN-COMPILED special register data cannot be reference-modified.

The compilation date and time can also be accessed with the intrinsic function WHEN-COMPILED (see Chapter 80, “WHEN-COMPILED,” on page 553). That function supports four-digit year values and provides additional information.

XML-CODE

The XML-CODE special register is used to communicate status between the XML parser and the processing procedure that was identified in an XML PARSE statement, and to indicate either that an XML GENERATE statement executed successfully or that an exception occurred during XML generation.

The XML-CODE special register has the implicit definition:

```
01  XML-CODE PICTURE S9(9) USAGE BINARY VALUE 0.
```

When used in nested programs, this special register is implicitly defined with the global attribute in the outermost program.

When the XML parser encounters an XML event, it sets XML-CODE and then passes control to the processing procedure. For all events except an EXCEPTION event, XML-CODE contains zero when the processing procedure receives control.

For an EXCEPTION event, the parser sets XML-CODE to an exception code that indicates the nature of the exception. XML PARSE exception codes are discussed in *Handling XML PARSE exceptions* in the *COBOL for Linux on x86 Programming Guide*.

You can set XML-CODE before returning to the parser, as follows:

- To -1, after a normal event, to indicate that the parser is to terminate immediately without processing any remaining XML document text, and without causing an EXCEPTION event.
- To 0, after an EXCEPTION event for which continuation is allowed, to indicate that the parser is to continue processing. The parser attempts to continue processing the XML document, but results are undefined.
- You can set XML-CODE to a code page identifier after an encoding conflict exception in some cases. See *Handling XML PARSE exceptions* in the *COBOL for Linux on x86 Programming Guide* for details.

If you set XML-CODE to any other value before returning to the parser, results are undefined.

When the parser returns control to the XML PARSE statement, XML-CODE contains the most recent value set by the processing procedure or the parser. In some cases, the parser overrides the value set by the processing procedure.

At termination of an XML GENERATE statement, XML-CODE contains either zero, indicating successful completion of XML generation, or a nonzero error code, indicating that an exception occurred during XML generation. XML GENERATE exception codes are detailed in *XML GENERATE exceptions* in the *COBOL for Linux on x86 Programming Guide*.

Related concepts
XML-CODE (*COBOL for Linux on x86 Programming Guide*)

Related tasks
Handling XML PARSE exceptions (*COBOL for Linux on x86 Programming Guide*)

Related references
XML GENERATE exceptions (*COBOL for Linux on x86 Programming Guide*)

XML-EVENT

The XML-EVENT special register is used to communicate event information from the XML parser to the processing procedure that was identified in the XML PARSE statement.

Prior to passing control to the processing procedure, the XML parser sets the XML-EVENT special register to the name of the XML event, as described in Table 3 on page 27.

XML-EVENT has the implicit definition:

```
01  XML-EVENT USAGE DISPLAY PICTURE X(30) VALUE SPACE.
```

When used in nested programs, this special register is implicitly defined with the global attribute in the outermost program.

The content of XML-EVENT is encoded in the EBCDIC or ASCII code page in effect at run time, depending on the setting of the CHAR compiler option (EBCDIC, NATIVE, or S390).

XML-EVENT cannot be used as a receiving data item.

Table 3. ***Contents of XML-EVENT and XML-TEXT or XML-NTEXT special registers***	
XML event (content of XML-EVENT)	**Content of XML-TEXT or XML-NTEXT**
ATTRIBUTE-CHARACTER	The single character that corresponds with the predefined entity reference in the attribute value
ATTRIBUTE-CHARACTERS	The value within quotation marks or apostrophes. This can be a substring of the attribute value if the value includes an entity reference.
ATTRIBUTE-NAME	The attribute name; the string to the left of the equal sign
ATTRIBUTE-NATIONAL-CHARACTER	Regardless of the type of the XML document specified by *identifier-1* in the XML PARSE statement, XML-TEXT is empty with length zero and XML-NTEXT contains the single national character that corresponds with the numeric character reference.
COMMENT	The text of the comment between the opening character sequence "<!--" and the closing character sequence "-->"
CONTENT-CHARACTER	The single character that corresponds with the predefined entity reference in the element content
CONTENT-CHARACTERS	The character content of the element between start and end tags. This can be a substring of the character content if the content includes an entity reference or another element.
CONTENT-NATIONAL-CHARACTER	Regardless of the type of the XML document specified by *identifier-1* in the XML PARSE statement, XML-TEXT is empty with length zero and XML-NTEXT contains the single national character that corresponds with the numeric character reference.[1]
DOCUMENT-TYPE-DECLARATION	The entire document type declaration, including the opening and closing character sequences "<!DOCTYPE" and ">"
ENCODING-DECLARATION	The value, between quotes or apostrophes, of the encoding declaration in the XML declaration
END-OF-CDATA-SECTION	The string "]]>"
END-OF-DOCUMENT	Empty with length zero
END-OF-ELEMENT	The name of the end element tag or empty element tag
EXCEPTION	The part of the document that was successfully scanned, up to and including the point at which the exception was detected.[2] Special register XML-CODE contains the unique error code that identifies the exception.
PROCESSING-INSTRUCTION-DATA	The rest of the processing instruction (after the target name), not including the closing sequence, "?>", but including trailing, and not leading, white space characters
PROCESSING-INSTRUCTION-TARGET	The processing instruction target name, which occurs immediately after the processing instruction opening sequence, "<?"
STANDALONE-DECLARATION	The value, between quotation marks or apostrophes ("yes" or "no"), of the stand-alone declaration in the XML declaration
START-OF-CDATA-SECTION	The string "<![CDATA["
START-OF-DOCUMENT	The entire document

Table 3. ***Contents of XML-EVENT and XML-TEXT or XML-NTEXT special registers*** *(continued)*	
XML event (content of XML-EVENT)	**Content of XML-TEXT or XML-NTEXT**
START-OF-ELEMENT	The name of the start element tag or empty element tag, also known as the element type
UNKNOWN-REFERENCE-IN-CONTENT	The entity reference name, not including the "&" and ";" delimiters
UNKNOWN-REFERENCE-IN-ATTRIBUTE	The entity reference name, not including the "&" and ";" delimiters
VERSION-INFORMATION	The value, between quotation marks or apostrophes, of the version information in the XML declaration

1. National characters with scalar values greater than 65,535 (NX"FFFF") are represented using two encoding units (a "surrogate pair"). Programmers are responsible for ensuring that operations on the content of XML-NTEXT do not split the pair of encoding units that together form a graphic character, thereby forming invalid data.
2. Exceptions for encoding conflicts are signaled before parsing begins. For these exceptions, XML-TEXT or XML-NTEXT is either zero length or contains only the encoding declaration value from the document. See *XML GENERATE Exceptions* in the *COBOL for Linux on x86 Programming Guide* for information about XML exception codes.

XML-NTEXT

The XML-NTEXT special register is defined during XML parsing to contain document fragments that are represented in usage NATIONAL.

XML-NTEXT is an elementary data item of category national of the length of the contained XML document fragment. The length of XML-NTEXT can vary from 0 through 2,000,000 *national character positions*. The maximum byte length is 4,000,000.

There is no equivalent COBOL data description entry.

When used in nested programs, this special register is implicitly defined with the global attribute in the outermost program.

The parser sets XML-NTEXT to the document fragment associated with an event before transferring control to the processing procedure in these cases:

- When the operand of the XML PARSE statement is a data item of category national
- For the ATTRIBUTE-NATIONAL-CHARACTER event
- For the CONTENT-NATIONAL-CHARACTER event

When XML-NTEXT is set, the XML-TEXT special register has a length of zero. At any given time, only one of the two special registers XML-NTEXT and XML-TEXT has a nonzero length.

Use the LENGTH function to determine the number of national characters that XML-NTEXT contains. Use the LENGTH OF special register to determine the number of bytes, rather than the number of national characters, that XML-NTEXT contains.

XML-NTEXT cannot be used as a receiving item.

XML-TEXT

The XML-TEXT special register is defined during XML parsing to contain document fragments that are represented in usage DISPLAY.

XML-TEXT is an elementary data item of category alphanumeric of the length of the contained XML document fragment. The length of XML-TEXT can vary from 0 through 2,147,483,646 bytes.

There is no equivalent COBOL data description entry.

When used in nested programs, this special register is implicitly defined with the global attribute in the outermost program.

The content of XML-TEXT has the encoding of the source XML document: ASCII or UTF-8 if the CHAR(NATIVE) compiler option is in effect; EBCDIC if the CHAR(EBCDIC) compiler option is in effect.

The parser sets XML-TEXT to the document fragment associated with an event before transferring control to the processing procedure when the operand of the XML PARSE statement is an alphanumeric data item, except for the ATTRIBUTE-NATIONAL-CHARACTER event and the CONTENT-NATIONAL-CHARACTER event.

When XML-TEXT is set, the XML-NTEXT special register has a length of zero. At any given time, only one of the two special registers XML-NTEXT and XML-TEXT has a nonzero length.

Use the LENGTH function or the LENGTH OF special register for XML-TEXT to determine the number of bytes that XML-TEXT contains.

XML-TEXT cannot be used as a receiving item.

Literals

A *literal* is a character-string whose value is specified either by the characters of which it is composed or by the use of a figurative constant.

For more information about figurative constants, see "Figurative constants" on page 15.

For descriptions of the different types of literals, see the following topics:

- "Alphanumeric literals" on page 29
- "Boolean literals" on page 32
- "DBCS literals" on page 32
- "National literals" on page 34
- "Numeric literals" on page 33

Alphanumeric literals

COBOL for Linux provides several formats of alphanumeric literals.

The formats of alphanumeric literals are:

- Format 1: "Basic alphanumeric literals" on page 29
- Format 2: "Hexadecimal notation for alphanumeric literals" on page 30
- Format 3: "Null-terminated alphanumeric literals" on page 31

Basic alphanumeric literals

Basic alphanumeric literals can contain only single-byte or multibyte characters.

The following format is for a basic alphanumeric literal:

Format 1: Basic alphanumeric literals

```
"single-byte or multibyte characters"
'single-byte or multibyte characters'
```

The enclosing quotation marks or apostrophes are excluded from the literal when the program is compiled.

An embedded quotation mark or apostrophe must be represented by a pair of quotation marks (" ") or a pair of apostrophes (' '), respectively, when it is the character used as the opening delimiter. For example:

```
"THIS ISN""T WRONG"
'THIS ISN''T WRONG'
```

The delimiter character used as the opening delimiter for a literal must be used as the closing delimiter for that literal. For example:

```
'THIS IS RIGHT'
"THIS IS RIGHT"
'THIS IS WRONG"
```

You can use apostrophes or quotation marks as the literal delimiters independent of the APOST/QUOTE compiler option.

Any punctuation characters included within an alphanumeric literal are part of the value of the literal.

"*single-byte or multibyte characters*" can be any characters represented in the code page indicated by the locale in effect at compile time.

The maximum length of an alphanumeric literal is 160 bytes. The minimum length is 1 byte.

Alphanumeric literals are in the alphanumeric data class and category. (Data classes and categories are described in "Classes and categories of data" on page 141.)

See *SOSI* in the *COBOL for Linux on x86 Programming Guide* which describes special treatment of values X'1E' and X'1F' in alphanumeric literals, and additional programming restrictions for alphanumeric literals containing these characters when the SOSI compiler option is in effect.

Usage note: Use hexadecimal notation to express control characters X'00' through X'1F' within an alphanumeric literal. Results are unpredictable if you specify these control characters in a basic alphanumeric literal.

Hexadecimal notation for alphanumeric literals

Hexadecimal notation can be used for alphanumeric literals.

Hexadecimal notation has the following format:

Format 2: Hexadecimal notation for alphanumeric literals

```
X"hexadecimal-digits"
X'hexadecimal-digits'
```

X" or X'
: The opening delimiter for the hexadecimal notation of an alphanumeric literal.

" or '
: The closing delimiter for the hexadecimal notation of an alphanumeric literal. If a quotation mark is used in the opening delimiter, a quotation mark must be used as the closing delimiter. Similarly, if an apostrophe is used in the opening delimiter, an apostrophe must be used as the closing delimiter.

Hexadecimal digits are characters in the range '0' to '9', 'a' to 'f', and 'A' to 'F', inclusive. Two hexadecimal digits represent one character in a single-byte character set (EBCDIC or ASCII). Four hexadecimal digits represent one character in a DBCS character set. For UTF-8 or EUC, the number of hexadecimal digits that represent a character depends on the byte length of the character. An even number of hexadecimal digits must be specified. The maximum length of a hexadecimal literal is 320 hexadecimal digits.

The continuation rules are the same as those for any alphanumeric literal. The opening delimiter (X" or X') cannot be split across lines.

An alphanumeric literal in hexadecimal notation has data class and category alphanumeric. The compiler converts the hexadecimal notation into the normal characters of an alphanumeric literal. Hexadecimal notation for alphanumeric literals can be used anywhere alphanumeric literals can be used.

However, alphanumeric literals in hexadecimal notation are interpreted as EBCDIC if the CHAR(EBCDIC) compiler option is in effect, whereas basic alphanumeric literals are always interpreted in the (ASCII-based) code page of the current locale. See *CHAR* in the *COBOL for Linux on x86 Programming Guide* for more information on the CHAR(EBCDIC) compiler option.

Usage note: Use hexadecimal notation to express control characters X'00' through X'1F' within an alphanumeric literal. Results are unpredictable if you specify these control characters in a basic alphanumeric literal.

See also "Hexadecimal notation for national literals" on page 35.

Null-terminated alphanumeric literals

Alphanumeric literals can be null-terminated.

The format for null-terminated alphanumeric literals is:

Format 3: Null-terminated alphanumeric literals

```
Z"mixed-characters"
Z'mixed-characters'
```

Z" or Z '
The opening delimiter for a null-terminated alphanumeric literal. Both characters of the opening delimiter (Z" or Z ') must be on the same source line.

" or '
The closing delimiter for a null-terminated alphanumeric literal.

If a quotation mark is used in the opening delimiter, a quotation mark must be used as the closing delimiter. Similarly, if an apostrophe is used in the opening delimiter, an apostrophe must be used as the closing delimiter.

mixed-characters
Can be any of the following characters:

- Solely single-byte characters
- Mixed single-byte and multibyte characters
- Solely multibyte characters
- UTF-8 characters
- EUC characters
- DBCS characters

However, you cannot specify the single-byte character with the value X'00'. X'00' is the null character automatically appended to the end of the literal. The content of the literal is otherwise subject to the same rules and restrictions as an alphanumeric literal with multibyte characters (format 1).

The length of the string of characters in the literal content can be 0 to 159 bytes. The actual length of the literal includes the terminating null character, and is a maximum of 160 bytes.

A null-terminated alphanumeric literal has data class and category alphanumeric. It can be used anywhere an alphanumeric literal can be used except that null-terminated literals are not supported in ALL *literal* figurative constants.

The LENGTH intrinsic function, when applied to a null-terminated alphanumeric literal, returns the number of bytes in the literal prior to but not including the terminating null. (The LENGTH special register does not support literal operands.)

Boolean literals

A *boolean literal* is a character-string delimited on the left by the separator *B"* and on the right by the quotation mark separator. The character-string consists only of the character 0 or 1. The value of a boolean literal is the character itself, excluding the delimiting separators.

DBCS literals

The formats and rules for DBCS literals are listed in this section.

Format for DBCS literals

```
G"DBCS-characters"
G'DBCS-characters'
N"DBCS-characters"
N'DBCS-characters'
```

G", G', N", or N'
Opening delimiters.

N" and N' identify a DBCS literal when the NSYMBOL(DBCS) compiler option is in effect. They identify a national literal when the NSYMBOL(NATIONAL) compiler option is in effect, and the rules specified in "National literals" on page 34 apply.

" or '
The closing delimiter. If a quotation mark is used in the opening delimiter, a quotation mark must be used as the closing delimiter. Similarly, if an apostrophe is used in the opening delimiter, an apostrophe must be used as the closing delimiter.

DBCS-characters
Any DBCS character.

Maximum length
The maximum length is limited by the available space on one source line.

Continuation rules
Cannot be continued across lines

DBCS literals with the SOSI compiler option

When the SOSI compiler option is in effect, workstation shift-out (SO) and shift-in (SI) control characters delimit DBCS characters in source text. The following section is for DBCS literals with shift-out and shift-in delimiters:

Format for DBCS literals

```
G"<DBCS-characters>"
G'<DBCS-characters>'
N"<DBCS-characters>"
N'<DBCS-characters>'
```

<
Represents the shift-out control character (X'1E')

>

Represents the shift-in control character (X'1F')

Rules for DBCS characters, literal delimiters, maximum length, and continuation are the same as for DBCS literals without the SOSI compiler option. See *SOSI* in the *COBOL for Linux on x86 Programming Guide* for details of the SOSI compiler option.

Where DBCS literals can be used

DBCS literals can be used in the following places:

- DATA DIVISION
  - In the VALUE clause of data description entries that define a data item of class DBCS.
  - In the VALUE OF clause of file description entries.
- PROCEDURE DIVISION
  - In a relation condition when the comparand is a DBCS data item, an elementary data item of class national, a national group item, or an alphanumeric group item
  - As an argument passed BY CONTENT in a CALL statement
  - In the DISPLAY and EVALUATE statements
  - In the following statements:
    - INITIALIZE; for details, see "INITIALIZE statement" on page 313.
    - INSPECT; for details, see "INSPECT statement" on page 316.
    - MOVE; for details, see "MOVE statement" on page 329.
    - STRING; for details, see "STRING statement" on page 387.
    - UNSTRING, for details, see "UNSTRING statement" on page 395.
  - In figurative constant ALL
  - As an argument to the NATIONAL-OF intrinsic function
- Compiler-directing statements COPY, REPLACE, and TITLE

Numeric literals

A *numeric literal* is a character-string whose characters are selected from the digits 0 through 9, a sign character (+ or -), and the decimal point.

If the literal contains no decimal point, it is an integer. (In this documentation, the word *integer* appearing in a format represents a numeric literal of nonzero value that contains no sign and no decimal point, except when other rules are included with the description of the format.) The following rules apply:

- If the ARITH(COMPAT) compiler option is in effect, one through 18 digits are allowed. If the ARITH(EXTEND) or ARITH(FULL) compiler option is in effect, one through 31 digits are allowed.
- Only one sign character is allowed. If included, it must be the leftmost character of the literal. If the literal is unsigned, it is a positive value.
- Only one decimal point is allowed. If a decimal point is included, it is treated as an assumed decimal point (that is, as not taking up a character position in the literal). The decimal point can appear anywhere within the literal except as the rightmost character.

The value of a numeric literal is the algebraic quantity expressed by the characters in the literal. The size of a numeric literal is equal to the number of digits specified by the user.

Numeric literals can be fixed-point or floating-point numbers.

Numeric literals are in the numeric data class and category. (Data classes and categories are described under "Classes and categories of data" on page 141.)

Rules for floating-point literal values

The format and rules for floating-point literals are listed below.

Format

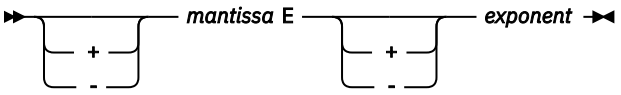

- The sign is optional before the mantissa and the exponent; if you omit the sign, the compiler assumes a positive number.
- The mantissa can contain between one and 16 digits. A decimal point must be included in the mantissa.
- The exponent is represented by an E followed by an optional sign and one or two digits.
- The magnitude of a floating-point literal value must fall between:
  - 32-bit representation: $1.175(10^{-38})$ to $3.403(10^{38})$

National literals

The national literal formats that COBOL for Linux provides are basic national literals and hexadecimal notation for national literals.

For more information about the formats, see “Basic national literals” on page 34 and “Hexadecimal notation for national literals” on page 35.

Basic national literals

The format and rules for basic national literals are listed in this section.

Format 1: Basic national literals

```
N"character-data"
N'character-data'
```

When the NSYMBOL(NATIONAL) compiler option is in effect, the opening delimiter `N"` or `N'` identifies a national literal. A national literal is of the class and category national.

When the NSYMBOL(DBCS) compiler option is in effect, the opening delimiter `N"` or `N'` identifies a DBCS literal, and the rules specified in “DBCS literals” on page 32 apply.

`N"` or `N'`
: Opening delimiters. The opening delimiter must be coded as single-byte characters. It cannot be split across lines.

`"` or `'`
: The closing delimiter. The closing delimiter must be coded as a single-byte character. If a quotation mark is used in the opening delimiter, it must be used as the closing delimiter. Similarly, if an apostrophe is used in the opening delimiter, it must be used as the closing delimiter.

  To include the quotation mark or apostrophe used in the opening delimiter in the content of the literal, specify a pair of quotation marks or apostrophes, respectively. Examples:

```
N'This literal''s content includes an apostrophe'
N'This literal includes ", which is not used in the opening delimiter'
N"This literal includes "", which is used in the opening delimiter"
```

character-data
The source text representation of the content of the national literal. *character-data* can include any combination of single-byte and multibyte characters represented in the code page in effect for the source code.

DBCS characters in the content of the literal can be delimited by workstation shift-out and shift-in control characters as described for the SOSI compiler option. See *SOSI* in the *COBOL for Linux on x86 Programming Guide* for details of the SOSI compiler option.

Maximum length
The maximum length of a national literal is 80 character positions, excluding the opening and closing delimiters. If the source content of the literal contains one or more multibyte characters, the maximum length is limited by the available space in Area B of a single source line.

The literal must contain at least one character. Each single-byte character in the literal counts as one character position and each multibyte character in the literal counts as one character position. Workstation shift-in and shift-out delimiters for DBCS characters are not counted.

Continuation rules
When the content of the literal includes multibyte characters, the literal cannot be continued. When the content of the literal does not include multibyte characters, normal continuation rules apply.

The source text representation of *character-data* is automatically converted to UTF-16 for use at run time (for example, when the literal is moved to or compared with a data item of category national).

Hexadecimal notation for national literals

The format and rules for the hexadecimal notation format of national literals are listed in this section.

Format 2: Hexadecimal notation for national literals

```
NX"hexadecimal-digits"
NX'hexadecimal-digits'
```

The hexadecimal notation format of national literals is not affected by the NSYMBOL compiler option.

`NX"` or `NX'`
Opening delimiters. The opening delimiter must be represented in single-byte characters. It must not be split across lines.

`"` or `'`
The closing delimiter. The closing delimiter must be represented as a single-byte character.

If a quotation mark is used in the opening delimiter, a quotation mark must be used as the closing delimiter. Similarly, if an apostrophe is used in the opening delimiter, an apostrophe must be used as the closing delimiter.

hexadecimal-digits
Hexadecimal digits in the range '0' to '9', 'a' - f', and 'A' to 'F', inclusive. Each group of four hexadecimal digits represents a single national character and must represent a valid code point in UTF-16. The number of hexadecimal digits must be a multiple of four.

Maximum length
The length of a national literal in hexadecimal notation must be from four to 320 hexadecimal digits, excluding the opening and closing delimiters. The length must be a multiple of four.

Continuation rules
Normal continuation rules apply.

The content of a national literal in hexadecimal notation is stored as national characters. The resulting content has the same meaning as a basic national literal that specifies the same national characters.

A national literal in hexadecimal notation has data class and category national and can be used anywhere that a basic national literal can be used.

Where national literals can be used

National literals can be used in multiple ways.

National literals can be used:

- In a VALUE clause associated with a data item of class national or a VALUE clause associated with a condition-name for a conditional variable that is defined with usage NATIONAL
- In figurative constant ALL
- In a relation condition
- In the WHEN phrase of a format-2 SEARCH statement (binary search)
- In the ALL, LEADING, or FIRST phrase of an INSPECT statement
- In the BEFORE or AFTER phrase of an INSPECT statement
- In the DELIMITED BY phrase of a STRING statement
- In the DELIMITED BY phrase of an UNSTRING statement
- As an argument passed BY CONTENT in the CALL statement
- As an argument passed BY VALUE in a CALL statement
- In the DISPLAY and EVALUATE statements
- As a sending item in the following procedural statements:
  - INITIALIZE
  - INSPECT
  - MOVE
  - STRING
  - UNSTRING
- In the argument list to the following intrinsic functions:

  DISPLAY-OF, LENGTH, LOWER-CASE, MAX, MIN, ORD-MAX, ORD-MIN, REVERSE, UPPER-CASE, USUPPLEMENTARY and UVALID

  Note: DBCS literals can't be used in the USUPPLEMENTARY and UVALID functions.
- In the compiler-directing statements COPY, REPLACE, and TITLE

A national literal can be used only as specified in the detailed rules in this document.

PICTURE character-strings

A *PICTURE character-string* is composed of the currency symbol and certain combinations of characters in the COBOL character set. PICTURE character-strings are delimited only by the separator space, separator comma, separator semicolon, or separator period.

A chart of PICTURE clause symbols appears in Table 17 on page 184.

Comments

A *comment* is a character-string that can contain any combination of characters from the character set of the computer.

It has no effect on the execution of the program. There are three forms of comments:

Comment entry (IDENTIFICATION DIVISION)
This form is described under Chapter 13, “Optional paragraphs,” on page 89.

Comment line (any division)
This form is described under "Comment lines" on page 50.

Inline comments (any division)
An inline comment is identified by a floating comment indicator (*>) preceded by one or more character-strings in the program-text area, and can be written on any line of a compilation group. All characters that follow the floating comment indicator up to the end of area B are comment text.

Character-strings that form comments can contain any single-byte or multibyte character from the code page in effect for compilation.

Multiple comment lines that contain multibyte strings are allowed. The embedding of multibyte characters in a comment line must be done on a line-by-line basis. Words containing those characters cannot be continued to a following line. No syntax checking for valid strings is provided in comment lines.

Chapter 4. Separators

A *separator* is a character or a string of two or more contiguous characters that delimits character-strings.

The separators are shown in the following table.

Table 4. ***Separators***

Separator	Meaning
b[1]	Space
,*b*[1]	Comma
.*b*[1]	Period
;*b*[1]	Semicolon
(	Left parenthesis
)	Right parenthesis
:	Colon
"*b*[1]	Quotation mark
'*b*[1]	Apostrophe
B"	Opening delimiter for Boolean literal
X"	Opening delimiter for a hexadecimal format alphanumeric literal
X'	Opening delimiter for a hexadecimal format alphanumeric literal
Z"	Opening delimiter for a null-terminated alphanumeric literal
Z'	Opening delimiter for a null-terminated alphanumeric literal
N"	Opening delimiter for a national literal[2]
N'	Opening delimiter for a national literal[2]
NX"	Opening delimiter for a hexadecimal format national literal
NX'	Opening delimiter for a hexadecimal format national literal
G"	Opening delimiter for a DBCS literal
G'	Opening delimiter for a DBCS literal
==	Pseudo-text delimiter

1. *b* represents a blank.
2. N" and N' are the opening delimiter for a DBCS literal when the NSYMBOL(DBCS) compiler option is in effect.

Rules for separators

A separator is a string of one or more punctuation characters.

In the following description, {} (curly braces) enclose each separator, and *b* represents a space. Anywhere a space is used as a separator or as part of a separator, more than one space can be used.

Space {*b*}
A space can immediately precede or follow any separator except:

© Copyright IBM Corp. 2021, 2025

- The opening pseudo-text delimiter, where the preceding space is required.
- Within quotation marks. Spaces between quotation marks are considered part of the alphanumeric literal; they are not considered separators.

Period {.*b*}, Comma {,*b*}, Semicolon {;*b*}
A separator comma is composed of a comma followed by a space. A separator period is composed of a period followed by a space. A separator semicolon is composed of a semicolon followed by a space.

The separator period must be used only to indicate the end of a sentence, or as shown in formats. The separator comma and separator semicolon can be used anywhere the separator space is used.

- In the IDENTIFICATION DIVISION, each paragraph must end with a separator period.
- In the ENVIRONMENT DIVISION, the SOURCE-COMPUTER, OBJECT-COMPUTER, SPECIAL-NAMES, and I-O-CONTROL paragraphs must each end with a separator period. In the FILE-CONTROL paragraph, each file-control entry must end with a separator period.
- In the DATA DIVISION, file (FD), sort/merge file (SD), and data description entries must each end with a separator period.
- In the PROCEDURE DIVISION, separator commas or separator semicolons can separate statements within a sentence and operands within a statement. Each sentence and each procedure must end with a separator period.

Parentheses { (} ... {) }
Except in pseudo-text, parentheses can appear only in balanced pairs of left and right parentheses. They delimit subscripts, a list of function arguments, reference-modifiers, arithmetic expressions, or conditions.

Colon { : }
The colon is a separator and is required when shown in general formats.

Quotation marks {"} ... {"}
An opening quotation mark must be immediately preceded by a space or a left parenthesis. A closing quotation mark must be immediately followed by a separator space, comma, semicolon, period, right parenthesis, or pseudo-text delimiter. Quotation marks must appear as balanced pairs. They delimit alphanumeric literals, except when the literal is continued (see “Continuation lines” on page 48).

Apostrophes {'} ... {'}
An opening apostrophe must be immediately preceded by a space or a left parenthesis. A closing apostrophe must be immediately followed by a separator space, comma, semicolon, period, right parenthesis, or pseudo-text delimiter. Apostrophes must appear as balanced pairs. They delimit alphanumeric literals, except when the literal is continued (see “Continuation lines” on page 48).

Null-terminated literal delimiters {Z"} ... {"}, {Z'} ... {'}
The opening delimiter must be immediately preceded by a space or a left parenthesis. The closing delimiter must be immediately followed by a separator space, comma, semicolon, period, right parenthesis, or pseudo-text delimiter.

DBCS literal delimiters {G"} ... {"}, {G'} ... {'}, {N"} ... {"}, {N'} ... {'}
The opening delimiter must be immediately preceded by a space or a left parenthesis. The closing delimiter must be immediately followed by a separator space, comma, semicolon, period, right parenthesis, or pseudo-text delimiter. `N"` and `N'` are DBCS literal delimiters when the NSYMBOL(DBCS) compiler option is in effect.

National literal delimiters {N"} ... {"}, {N'} ... {'}, {NX"} ... {"}, {NX'} ... {'}
The opening delimiter must be immediately preceded by a space or a left parenthesis. The closing delimiter must be immediately followed by a separator space, comma, semicolon, period, right parenthesis, or pseudo-text delimiter. `N"` and `N'` are DBCS literal delimiters when the NSYMBOL(DBCS) compiler option is in effect.

Pseudo-text delimiters {*b*==} ... {==*b*}
An opening pseudo-text delimiter must be immediately preceded by a space. A closing pseudo-text delimiter must be immediately followed by a separator space, comma, semicolon, or period. Pseudo-text delimiters must appear as balanced pairs. They delimit pseudo-text. (See “COPY statement” on page 564.)

Any punctuation character included in a PICTURE character-string, a comment character-string, or an alphanumeric literal is not considered a punctuation character, but is part of the character-string or literal.

Chapter 5. Sections and paragraphs

Sections and paragraphs define a program. Sections and paragraphs are subdivided into sentences, statements, and entries.

Sentences are subdivided into statements, and statements are subdivided into phrases. Entries are subdivided into clauses.

For details, see:

- “Sentences, statements, and entries” on page 43
- “Statements” on page 44
- “Phrases” on page 44
- “Clauses” on page 44

For more information about sections, paragraphs, and statements, see “Procedures” on page 234.

Sentences, statements, and entries

Unless the associated rules explicitly state otherwise, each required clause or statement must be written in the sequence shown in its format. If optional clauses or statements are used, they must be written in the sequence shown in their formats. These rules are true even for clauses and statements treated as comments.

The syntactical hierarchy follows this form:

- IDENTIFICATION DIVISION
  - Paragraphs
    - Entries
      - Clauses
- ENVIRONMENT DIVISION
  - Sections
    - Paragraphs
      - Entries
        - Clauses
          - Phrases
- DATA DIVISION
  - Sections
    - Entries
      - Clauses
        - Phrases
- PROCEDURE DIVISION
  - Sections
    - Paragraphs
      - Sentences
        - Statements
          - Phrases

© Copyright IBM Corp. 2021, 2025

Entries

An *entry* is a series of clauses that ends with a separator period. Entries are constructed in the identification, environment, and data divisions.

Clauses

A *clause* is an ordered set of consecutive COBOL character-strings that specifies an attribute of an entry. Clauses are constructed in the identification, environment, and data divisions.

Sentences

A *sentence* is a sequence of one or more statements that ends with a separator period. Sentences are constructed in the PROCEDURE DIVISION.

Statements

A *statement* specifies an action to be taken by the program. Statements are constructed in the PROCEDURE DIVISION.

For descriptions of the different types of statements, see:

- "Imperative statements" on page 263
- "Conditional statements" on page 264
- Chapter 7, "Scope of names," on page 53
- Chapter 83, "Compiler-directing statements," on page 561

Phrases

Each clause or statement in a program can be subdivided into smaller units called *phrases*.

Chapter 6. Reference format

COBOL source text must be written in COBOL *reference format*, which can be *fixed source format* or *extended source format*.

Fixed source format consists of the following areas in a 72-character line. Extended source format consists of the following areas in a 252-character line. In both fixed and extended source format, the program-text area begins in character position 8 and continues until the end of Area B.

Sequence number area
Columns 1 through 6

Indicator area
Column 7

Area A
Columns 8 through 11

Area B
Columns 12 through 72 in fixed source format

Columns 12 through 252 in extended source format

Remember: In fixed source format and extended source format, lines shorter than the maximum length are extended with spaces to the maximum length.

This figure illustrates fixed source format for a COBOL source line.

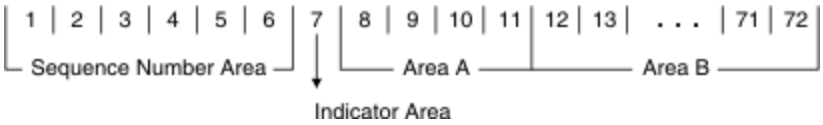

This figure illustrates extended source format for a COBOL source line.

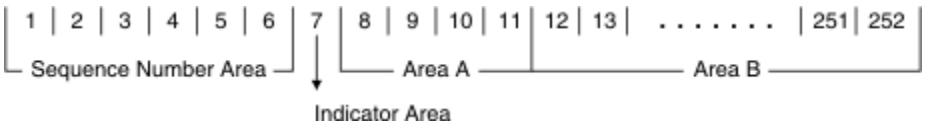

For information about how to indicate source format, see *SRCFORMAT* in the *COBOL for Linux on x86 Programming Guide*.

The following topics provide details about these areas:

- "Sequence number area" on page 45
- "Indicator area" on page 46
- "Area A" on page 46
- "Area B" on page 47
- "Area A or Area B" on page 50
- "Source conversion utility (scu)" on page 51

Sequence number area

The sequence number area can be used to label a source statement line. The content of this area can consist of any character in the character set of the computer.

© Copyright IBM Corp. 2021, 2025

Indicator area

Use the indicator area to specify the continuation of words or alphanumeric literals from the previous line onto the current line, the treatment of text as documentation, and debugging lines.

See "Continuation lines" on page 48, "Comment lines" on page 50, and "Debugging lines" on page 51.

The indicator area can be used for source listing formatting. A slash (/) placed in the indicator column causes the compiler to start a new page for the source listing, and the corresponding source record to be treated as a comment. The effect can be dependent on the LINECOUNT compiler option. For information about the LINECOUNT compiler option, see *LINECOUNT* in the *COBOL for Linux on x86 Programming Guide*.

Area A

Certain items must begin in Area A.

These items are:

- Division headers
- "Section headers" on page 46
- Paragraph headers or paragraph names
- Level indicators or level-numbers (01 and 77)
- DECLARATIVES and END DECLARATIVES
- END PROGRAM markers

Division headers

A division header is a combination of words, followed by a separator period to indicate the beginning of a division.

See the following division headers:

- IDENTIFICATION DIVISION.
- ENVIRONMENT DIVISION.
- DATA DIVISION.
- PROCEDURE DIVISION.

A division header (except when a USING phrase is specified with a PROCEDURE DIVISION header) must be immediately followed by a separator period. Except for the USING phrase, no text can appear on the same line.

Section headers

In the environment and procedure divisions, a section header indicates the beginning of a series of paragraphs.

For example:

```
INPUT-OUTPUT SECTION.
```

In the DATA DIVISION, a section header indicates the beginning of an entry; for example:

```
FILE SECTION.
LINKAGE SECTION.
LOCAL-STORAGE SECTION.
```

```
WORKING-STORAGE SECTION.
```

A section header must be immediately followed by a separator period.

Paragraph headers or paragraph names

A paragraph header or paragraph name indicates the beginning of a paragraph.

In the ENVIRONMENT DIVISION, a paragraph consists of a paragraph header followed by one or more entries. For example:

```
OBJECT-COMPUTER. computer-name.
```

In the PROCEDURE DIVISION, a paragraph consists of a paragraph-name followed by one or more sentences.

Level indicators (FD and SD) or level-numbers (01 and 77)

A level indicator can be either FD or SD.

A level indicator must begin in Area A and be followed by a space. (See "FILE SECTION" on page 154.) A level-number that must begin in Area A is a one- or two-digit integer with a value of 01 or 77. It must be followed by a space or separator period.

DECLARATIVES and END DECLARATIVES

DECLARATIVES and END DECLARATIVES are keywords that begin and end the declaratives part of the source unit.

In the PROCEDURE DIVISION, each of the keywords DECLARATIVES and END DECLARATIVES must begin in Area A and be followed immediately by a separator period; no other text can appear on the same line. After the keywords END DECLARATIVES, no text can appear before the following section header. (See "Declaratives" on page 234.)

END PROGRAM markers

An END PROGRAM marker indicates the end of a COBOL program.

For example:

```
END PROGRAM program-name.
```

For programs

program-name must be identical to the *program-name* of the corresponding PROGRAM-ID paragraph. Every COBOL program, except an outermost program that contains no nested programs and is not followed by another batch program, must end with an END PROGRAM marker.

Area B

Certain items must begin in Area B.

These items are:

- Entries, sentences, statements, and clauses
- Continuation lines

Entries, sentences, statements, clauses

The first entry, sentence, statement, or clause begins on either the same line as the header or paragraph-name that it follows, or in Area B of the next nonblank line that is not a comment line. Successive

sentences or entries either begin in Area B of the same line as the preceding sentence or entry, or in Area B of the next nonblank line that is not a comment line.

Within an entry or sentence, successive lines in Area B can have the same format or can be indented to clarify program logic. The output listing is indented only if the input statements are indented. Indentation does not affect the meaning of the program. The programmer can choose the amount of indentation, subject only to the restrictions on the width of Area B. See also Chapter 5, “Sections and paragraphs,” on page 43.

Continuation lines

Any sentence, entry, clause, or phrase that requires more than one line can be continued in Area B of the next line that is neither a comment line nor a blank line.

The line being continued is a *continued line*; the succeeding lines are *continuation lines*. Area A of a continuation line must be blank.

If there is no hyphen (-) in the indicator area (column 7) of a line, the last character of the preceding line is assumed to be followed by a space.

The following items cannot be continued:

- Multibyte user-defined words
- DBCS literals
- Alphanumeric literals containing multibyte characters
- National literals containing multibyte characters

However, alphanumeric literals and national literals in hexadecimal notation can be continued regardless of the kind of characters expressed in hexadecimal notation.

All characters that make up an opening literal delimiter must be on the same line. For example, `Z"`, `G"`, `N"`, `NX"`, or `X"`.

Both characters that make up the pseudo-text delimiter separator, ==, the floating comment indicator, *>, or the compiler directive indicator, >>, must be on the same line.

A compiler directive or compiler directive phrase, which begins with >>, must be specified on the same line.

If there is a hyphen in the indicator area of a line, the first nonblank character of the continuation line immediately follows the last nonblank character of the continued line without an intervening space.

Continuation of alphanumeric and national literals

Alphanumeric and national literals can be continued only when there are no multibyte characters in the content of the literal.

The following rules apply to alphanumeric and national literals that do not contain multibyte characters:

- If the continued line contains an alphanumeric or national literal without a closing quotation mark, all spaces at the end of the continued line (through column 72 in fixed source format, or through column 252 in extended source format) are considered to be part of the literal. The continuation line must contain a hyphen in the indicator area, and the first nonblank character must be a quotation mark. The continuation of the literal begins with the character immediately following the quotation mark.
- If an alphanumeric or national literal that is to be continued on the next line has as its last character a quotation mark in column 72 in fixed source format, or in column 252 in extended source format, the continuation line must start with two consecutive quotation marks. This will result in a quotation mark as part of the value of the literal.

  If the last character on the continued line of an alphanumeric or national literal is a quotation mark in Area B, the continuation line can start with a quotation mark. This will result in two consecutive literals instead of one continued literal.

The rules are the same when an apostrophe is used instead of a quotation mark in delimiters.

If you want to continue a literal such that the continued lines and the continuation lines are part of one literal:

- Code a hyphen in the indicator area of each continuation line.
- Code the literal value using all columns of each continued line, up to and including column 72 in fixed source format, or column 252 in extended source format. (Do not terminate the continued lines with a quotation mark followed by a space.)
- Code a quotation mark before the first character of the literal on each continuation line.
- Terminate the last continuation line with a quotation mark followed by a space.

In the following fixed source format examples, the number and size of literals created are indicated below the example:

```
|...+.*..1....+....2....+....3....+....4....+....5....+....6....+....7..
000001               "AAAAAAAAAABBBBBBBBBCCCCCCCCCDDDDDDDDDDEEEEEEEEEE
      -              "GGGGGGGGGGHHHHHHHHHIIIIIIIIIJJJJJJJJJKKKKKKKKKK
      -    "LLLLLLLLLMMMMMMMMM"
```

- Literal 000001 is interpreted as one alphanumeric literal that is 120 bytes long. Each character between the starting quotation mark and up to and including column 72 of continued lines is counted as part of the literal.

```
|...+.*..1....+....2....+....3....+....4....+....5....+....6....+....7..
000003              N"AAAAAAAAAABBBBBBBBBCCCCCCCCCDDDDDDDDDEEEEEEEEEE
      -              "GGGGGGGGGG"
```

- Literal 000003 is interpreted as one national literal that is 60 national character positions in length (120 bytes). Each character between the starting quotation mark and the ending quotation mark on the continued line is counted as part of the literal. Although single-byte characters are entered, the value of the literals is stored as national characters.

```
|...+.*..1....+....2....+....3....+....4....+....5....+....6....+....7..
000005     "AAAAAAAAAABBBBBBBBBCCCCCCCCCDDDDDDDDDEEEEEEEEEE
      -    "GGGGGGGGGGHHHHHHHHHIIIIIIIIIJJJJJJJJJKKKKKKKKKK
      -    "LLLLLLLLLMMMMMMMMM"
```

- Literal 000005 is interpreted as one literal that is 140 bytes long. The blanks at the end of each continued line are counted as part of the literal because the continued lines do not end with a quotation mark.

```
|...+.*..1....+....2....+....3....+....4....+....5....+....6....+....7..
000010     "AAAAAAAAAABBBBBBBBBCCCCCCCCCDDDDDDDDDEEEEEEEEEE"
      -    "GGGGGGGGGGHHHHHHHHHIIIIIIIIIJJJJJJJJJKKKKKKKKKK"
      -    "LLLLLLLLLMMMMMMMMM"
```

- Literal 000010 is interpreted as three separate literals that have lengths of 50, 50, and 20, respectively. The quotation mark with the following space terminates the continued line. Only the characters within the quotation marks are counted as part of the literals. Literal 000010 is not valid as a VALUE clause literal for non-level-88 data items.

To code a continued literal where the length of each continued part of the literal is less than the length of Area B, adjust the starting column such that the last character of the continued part is in column 72 in fixed source format, or in column 252 in extended source format.

Area A or Area B

Certain items can begin in either Area A or Area B.

These items are:

- Level-numbers
- Comment lines
- Floating comment indicators (*>)
- Compiler-directing statements
- Compiler directives
- Debugging lines
- Pseudo-text
- Blank lines

Level-numbers

A level-number that can begin in Area A or B is a one- or two-digit integer with a value of 02 through 49, 66, or 88.

A level-number that must begin in Area A is a one- or two-digit integer with a value of 01 or 77. A level-number must be followed by a space or a separator period. For more information, see "Level-numbers" on page 164.

Comment lines

A *comment line* is any line with an asterisk (*) or slash (/) in the indicator area (column 7) of the line, or with a floating comment indicator (*>) as the first character-string in the program text area (Area A plus Area B).

The comment can be written anywhere in the program text area of that line, and can consist of any combination of characters from the character set of the computer.

Comment lines can be placed anywhere in a program. Comment lines placed before the IDENTIFICATION DIVISION header must follow any control cards (for example, PROCESS or CBL).

Important: Comments intermixed with control cards could nullify some of the control cards and cause them to be diagnosed as errors.

Multiple comment lines are allowed. Each must begin with an asterisk (*) or a slash (/) in the indicator area, or with a floating comment indicator (*>).

For more information about floating comment indicators, see "Floating comment indicators (*>)" on page 50.

An asterisk (*) comment line is printed on the next available line in the output listing. The effect can be dependent on the LINECOUNT compiler option. For information about the LINECOUNT compiler option, see *LINECOUNT* in the *COBOL for Linux on x86 Programming Guide*. A slash (/) comment line is printed on the first line of the next page, and the current page of the output listing is ejected.

The compiler treats a comment line as documentation, and does not check it syntactically.

Floating comment indicators (*>)

In addition to the fixed indicators that can only be specified in the indicator area of the source reference format, a floating comment indicator (*>) can be specified anywhere in the program-text area to indicate a comment line or an inline comment.

A floating comment indicator indicates a comment line if it is the first character string in the program-text area (Area A plus Area B), or indicates an inline comment if it is after one or more character strings in the program-text area.

These are the rules for floating comment indicators:

- Both characters (* and >) that form the multiple-character floating indicator must be contiguous and on the same line.
- The floating comment indicator for an inline comment must be preceded by a separator space, and can be specified wherever a separator space can be specified.
- All characters following the floating comment indicator up to the end of Area B are comment text.

Compiler-directing statements

Most compiler-directing statements, including COPY and REPLACE, can start in either Area A or Area B.

BASIS, PROCESS (CBL), *CBL (*CONTROL), DELETE, EJECT, INSERT, SKIP1, SKIP2, SKIP3, and TITLE statements can also start in Area A or Area B.

Compiler directives

Compiler directives must start in Area B.

For more information, see Chapter 84, “Compiler directives,” on page 585.

Debugging lines

A *debugging line* is any line with a D (or d) in the indicator area of the line.

Debugging lines can be written in the ENVIRONMENT DIVISION (after the OBJECT-COMPUTER paragraph), the DATA DIVISION, and the PROCEDURE DIVISION. If a debugging line contains only spaces in Area A and Area B, it is considered a blank line.

See "WITH DEBUGGING MODE" in “SOURCE-COMPUTER paragraph” on page 93.

Pseudo-text

The character-strings and separators that comprise *pseudo-text* can start in either Area A or Area B.

If, however, there is a hyphen in the indicator area (column 7) of a line that follows the opening pseudo-text delimiter, Area A of the line must be blank, and the rules for continuation lines apply to the formation of text words. See “Continuation lines” on page 48 for details.

Blank lines

A *blank line* contains nothing but spaces in column 7 through column 72 in fixed source format, or in column 7 through column 252 in extended source format. A blank line can be anywhere in a program.

Source conversion utility (scu)

The source conversion utility (scu) is a stand-alone Linux program that assists in the conversion of COBOL source programs from non-IBM or free-format source formats to a format that can be compiled by COBOL for Linux.

For more information about scu, see "Source conversion utility (scu)" in the *Migration Guide*.

Chapter 7. Scope of names

A user-defined word names a data resource or a COBOL programming element. Examples of named data resources are a file, a data item, or a record. Examples of named programming elements are a program or a paragraph.

The sections below define the types of names in COBOL and explain where the names can be referenced:

- "Types of names" on page 53
- "External and internal resources" on page 55
- "Resolution of names" on page 55

Types of names

In addition to identifying a resource, a name can have global or local attributes. Some names are always global, some names are always local, and some names are either local or global depending on specifications in the program in which the names are defined.

For programs

A *global name* can be used to refer to the resource with which it is associated both:

- From within the program in which the global name is defined
- From within any other program that is contained in the program that defines the global name

Use the GLOBAL clause in the data description entry to indicate that a name is global. For more information about using the GLOBAL clause, see "GLOBAL clause" on page 155.

A *local name* can be used only to refer to the resource with which it is associated from within the program in which the local name is defined.

By default, if a data-name, a file-name, a record-name, a record-key-name, or a condition-name definition in a data description entry does not include the GLOBAL clause, the name is local.

Restriction: Specific rules sometimes prohibit specifying the GLOBAL clause for certain data description, file description, or record description entries.

The following list indicates the names that you can use and whether the name can be local or global:

data-name

data-name assigns a name to a data item.

A data-name is global if the GLOBAL clause is specified either in the data description entry that defines the data-name or in another entry to which that data description entry is subordinate.

file-name

file-name assigns a name to a file connector.

A file-name is global if the GLOBAL clause is specified in the file description entry for that file-name.

record-name

record-name assigns a name to a record.

A record-name is global if the GLOBAL clause is specified in the record description that defines the record-name, or in the case of record description entries in the FILE SECTION, if the GLOBAL clause is specified in the file description entry for the file name associated with the record description entry.

record-key-name

record-key-name assigns a name to a key associated with an indexed file.

You can define record-key-name by using the SOURCE phrase in the ALTERNATE RECORD KEY clause, or using the RECORD KEY clause of the file control entry for an indexed file. A record-key-name is global if the GLOBAL clause is specified in the file description entry for that file.

© Copyright IBM Corp. 2021, 2025

Restriction: *record-key-name* is supported for STL file system only.

condition-name
condition-name associates a value with a conditional variable.

A condition-name that is defined in a data description entry is global if that entry is subordinate to another entry that specifies the GLOBAL clause.

A condition-name that is defined within the configuration section is always global.

program-name
program-name assigns a name to an external or internal (nested) program. For more information, see "Conventions for program-names" on page 82.

A program-name is neither local nor global. For more information, see "Conventions for program-names" on page 82.

section-name
section-name assigns a name to a section in the PROCEDURE DIVISION.

A section-name is always local.

paragraph-name
paragraph-name assigns a name to a paragraph in the PROCEDURE DIVISION.

A paragraph-name is always local.

basis-name
basis-name specifies the name of source text that is be included by the compiler into the source unit. For details, see "BASIS statement" on page 561.

library-name
library-name specifies the COBOL library that the compiler uses for including COPY text. For details, see "COPY statement" on page 564.

text-name
text-name specifies the name of COPY text to be included by the compiler into the source unit. For details, see "COPY statement" on page 564.

alphabet-name
alphabet-name assigns a name to a specific character set or collating sequence, or both, in the SPECIAL-NAMES paragraph of the ENVIRONMENT DIVISION.

An alphabet-name is always global.

***class-name* (of data)**
class-name assigns a name to the proposition in the SPECIAL-NAMES paragraph of the ENVIRONMENT DIVISION for which a truth value can be defined.

A class-name is always global.

mnemonic-name
mnemonic-name assigns a user-defined word to an implementer-name.

A mnemonic-name is always global.

symbolic-character
symbolic-character specifies a user-defined figurative constant.

A symbolic-character is always global.

index-name
index-name assigns a name to an index associated with a specific table.

If a data item that possesses the global attribute includes a table accessed with an index, that index also possesses the global attribute. In addition, the scope of that index-name is identical to the scope of the data-name that includes the table.

type-name
type-name names a user-defined data type that can be used in a TYPE clause to define a data item.

A type name is global if the GLOBAL clause is specified in the data description entry by which the type-name is declared. The GLOBAL attribute of a type-name is restricted to the type-name, and is not acquired by a data item that is defined using the type-name in a TYPE clause.

External and internal resources

The storage associated with a data item or a file connector can be *external* or *internal* to the program in which the resource is declared.

A data item or file connector is external if the storage associated with that resource is associated with the run unit rather than with any particular program within the run unit. An external resource can be referenced by any program in the run unit that describes the resource. References to an external resource from different programs using separate descriptions of the resource are always to the same resource. In a run unit, there is only one representation of an external resource.

A resource is internal if the storage associated with that resource is associated only with the program that describes the resource.

External and internal resources can have either global or local names.

A data record described in the WORKING-STORAGE SECTION is given the external attribute by the presence of the EXTERNAL clause in its data description entry. Any data item described by a data description entry subordinate to an entry that describes an external record also attains the external attribute. If a record or data item does not have the external attribute, it is part of the internal data of the program in which it is described.

Two programs in a run unit can reference the same file connector in the following circumstances:

- An external file connector can be referenced from any program that describes that file connector.
- If a program is contained within another program, both programs can refer to a global file connector by referring to an associated global file-name either in the containing program or in any program that directly or indirectly contains the containing program.

Two programs in a run unit can reference common data in the following circumstances:

- The data content of an external data record can be referenced from any program provided that program has described that data record.
- If a program is contained within another program, both programs can refer to data that possesses the global attribute either in the program or in any program that directly or indirectly contains the containing program.

The data records described as subordinate to a file description entry that does not contain the EXTERNAL clause or to a sort-merge file description entry, as well as any data items described subordinate to the data description entries for such records, are always internal to the program that describes the file-name. If the EXTERNAL clause is included in the file description entry, the data records and the data items attain the external attribute.

Resolution of names

When a program, program B, is directly contained within another program, program A, both programs can define a condition-name, a data-name, a file-name, a record-key-name, or a record-name using the same user-defined word. When such a duplicated name is referenced in program B, the following steps determine the referenced resource:

1. The referenced resource is identified from the set of all names that are defined in program B and all global names defined in program A and in any programs that directly or indirectly contain program A. The normal rules for qualification and any other rules for uniqueness of reference are applied to this set of names until one or more resources is identified.
2. If only one resource is identified, it is the referenced resource.

3. If more than one resource is identified, no more than one resource can have a name local to program B. If zero or one of the resources has a name local to program B, the following rules apply:
   - If the name is declared in program B, the resource in program B is the referenced resource.
   - If the name is not declared in program B, the referenced resource is:
     - The resource in program A if the name is declared in program A
     - The resource in the containing program if the name is declared in the program that contains program A

     This rule is applied to further containing programs until a valid resource is found.

Chapter 8. Referencing data names, copy libraries, and PROCEDURE DIVISION names

References can be made to external and internal resources. References to data and procedures can be either explicit or implicit.

For more information about rules for qualification, and for explicit and implicit data references, see the following topics:

- "Uniqueness of reference" on page 57
- "Data attribute specification" on page 70

Uniqueness of reference

Every user-defined name in a COBOL program is assigned by the user to name a resource for solving a data processing problem. To use a resource, a statement in a COBOL program must contain a reference that uniquely identifies that resource.

To ensure uniqueness of reference, a user-defined name can be qualified. A subscript is required for unique reference to a table element, except as specified in "Subscripting" on page 63. A data-name or function-name, any subscripts, and the specified reference-modifier uniquely reference a data item defined by reference modification.

When the same name has been assigned in separate programs to two or more occurrences of a resource of a given type, and when qualification by itself does not allow the references in one of those programs to differentiate between the identically named resources, then certain conventions that limit the scope of names apply. The conventions ensure that the resource identified is that described in the program containing the reference. For more information about resolving program-names, see "Resolution of names" on page 55.

Unless otherwise specified by the rules for a statement, any subscripts and reference modification are evaluated only once as the first step in executing that statement.

Qualification

A name that exists within a hierarchy of names can be made unique by specifying one or more higher-level names in the hierarchy. The higher-level names are called *qualifiers*, and the process by which such names are made unique is called *qualification*.

Qualification is specified by placing one or more phrases after a user-specified name, with each phrase made up of the word IN or OF followed by a qualifier. (IN and OF are logically equivalent.)

In any hierarchy, the data-name associated with the highest level must be unique if it is referenced, and cannot be qualified.

You must specify enough qualification to make the name unique; however, it is not always necessary to specify all the levels of the hierarchy. For example, if there is more than one file whose records contain the field `EMPLOYEE-NO`, but only one of the files has a record named `MAIN-RECORD`:

- `EMPLOYEE-NO OF MAIN-RECORD` sufficiently qualifies `EMPLOYEE-NO`.
- `EMPLOYEE-NO OF MAIN-RECORD OF MAIN-FILE` is valid but unnecessary.

Qualification rules

The rules for qualifying a name are:

- A name can be qualified even though it does not need qualification except in a REDEFINES clause, in which case it must not be qualified.

© Copyright IBM Corp. 2021, 2025

- Each qualifier must be of a higher level than the name it qualifies and must be within the same hierarchy.
- If there is more than one combination of qualifiers that ensures uniqueness, any of those combinations can be used.

Identical names

When programs are directly or indirectly contained within other programs, each program can use identical user-defined words to name resources.

A program references the resources that program describes rather than the same-named resources described in another program, even if the names are different types of user-defined words.

References to COPY libraries

If *library-name-1* is not specified, SYSLIB is assumed as the library name.

Format

```
►► text-name-1 ──┬──────────────────────────┬──►◄
                 │                          │
                 │   ┌─ IN ─┬─ library-name-1 ─┘
                 └───┤      │
                     └─ OF ─┘
```

For rules on referencing COPY libraries, see "COPY statement" on page 564.

References to PROCEDURE DIVISION names

PROCEDURE DIVISION names that are explicitly referenced in a program must be unique within a section.

Format 1

```
►► paragraph-name-1 ──┬──────────────────────────┬──►◄
                      │                          │
                      │   ┌─ IN ─┬─ section-name-1 ─┘
                      └───┤      │
                          └─ OF ─┘
```

Format 2

```
►► section-name-1 ──►◄
```

A section-name is the highest and only qualifier available for a paragraph-name and must be unique if referenced. (Section-names are described under "Procedures" on page 234.)

If explicitly referenced, a paragraph-name must not be duplicated within a section. When a paragraph-name is qualified by a section-name, the word SECTION must not appear. A paragraph-name need not be qualified when referred to within the section in which it appears. A paragraph-name or section-name that appears in a program cannot be referenced from any other program.

References to DATA DIVISION names

This section discusses the following types of references.

- "Simple data reference" on page 59
- "Identifiers" on page 59

Simple data reference

The most basic method of referencing data items in a COBOL program is *simple data reference*, which is *data-name-1* without qualification, subscripting, or reference modification. Simple data reference is used to reference a single elementary or group item.

Format

```
>>─ data-name-1 ─><
```

data-name-1
Can be any data description entry.

data-name-1 must be unique in a program.

Identifiers

When used in a syntax diagram in this information, the term *identifier* refers to a valid combination of a data-name or function-identifier with its qualifiers, subscripts, and reference-modifiers as required for uniqueness of reference.

Rules for identifiers associated with a format can however specifically prohibit qualification, subscripting, or reference modification.

The term *data-name* refers to a name that must not be qualified, subscripted, or reference modified unless specifically permitted by the rules for the format.

- For a description of qualification, see "Qualification" on page 57.
- For a description of subscripting, see "Subscripting" on page 63.
- For a description of reference modification, see "Reference modification" on page 66.

Format 1

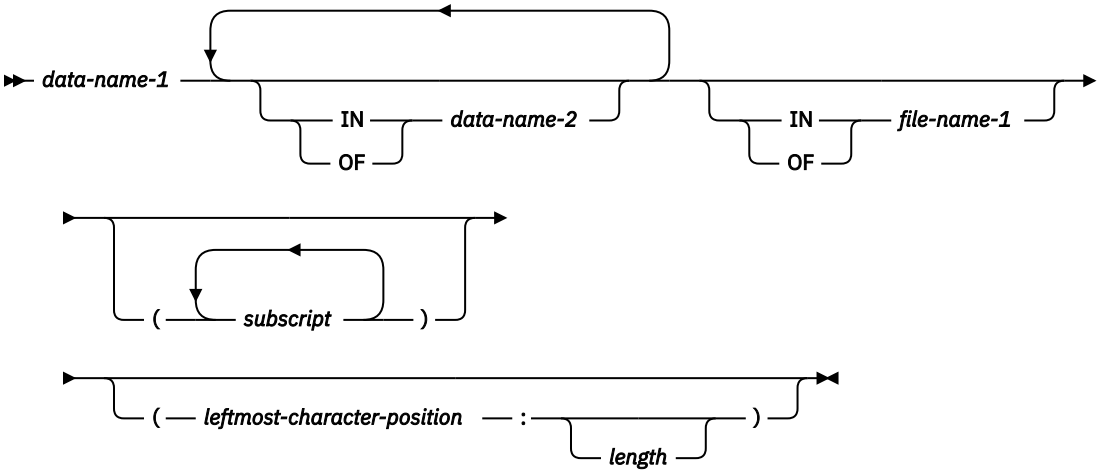

data-name-1 , data-name-2
Can be a record-name.

file-name-1
Must be identified by an FD or SD entry in the DATA DIVISION.

file-name-1 must be unique within this program.

Format 2

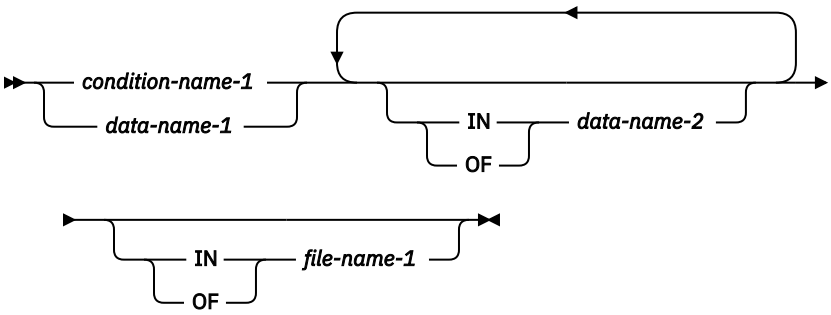

Format 3

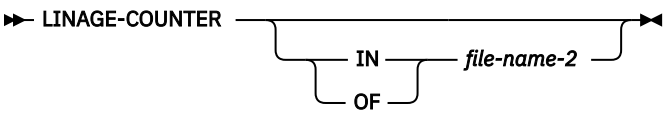

data-name-1* , *data-name-2
Can be a record-name.

condition-name-1
Can be referenced by statements and entries either in the program that contains the configuration section or in a program contained within that program.

file-name-1
Must be identified by an FD or SD entry in the DATA DIVISION.

Must be unique within this program.

LINAGE-COUNTER
Must be qualified each time it is referenced if more than one file description entry that contains a LINAGE clause has been specified in the source unit.

file-name-2
Must be identified by the FD or SD entry in the DATA DIVISION. *file-name-2* must be unique within this program.

Duplication of data-names must not occur in those places where the data-names cannot be made unique by qualification.

In the same program, the data-name specified as the subject of the entry whose level-number is 01 that includes the EXTERNAL clause must not be the same data-name specified for any other data description entry that includes the EXTERNAL clause.

In the same DATA DIVISION, the data description entries for any two data items for which the same data-name is specified must not include the GLOBAL clause.

DATA DIVISION names that are explicitly referenced must either be uniquely defined or made unique through qualification. Unreferenced data items need not be uniquely defined. The highest level in a data hierarchy (a data item associated with a level indicator (FD or SD in the FILE SECTION) or with level-number 01) must be uniquely named if referenced. Data items associated with level-numbers 02 through 49 are successively lower levels of the hierarchy.

Condition-name

See the syntax and description for details.

Format 1: condition-name in data division

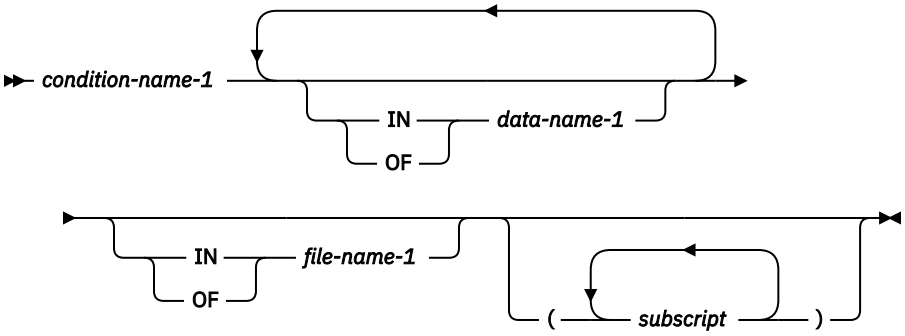

Format 2: condition-name in SPECIAL-NAMES paragraph

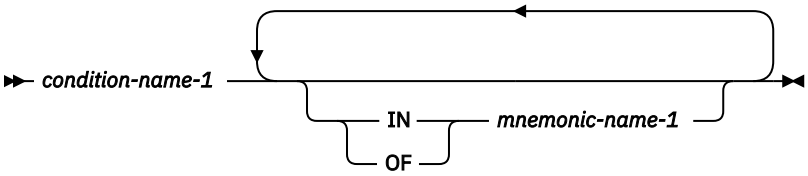

condition-name-1

Can be referenced by statements and entries either in the program that contains the definition of *condition-name-1*, or in a program contained within that program.

If explicitly referenced, a condition-name must be unique or be made unique through qualification or subscripting (or both) except when the scope of names by itself ensures uniqueness of reference.

If qualification is used to make a condition-name unique, the associated conditional variable can be used as the first qualifier. If qualification is used, the hierarchy of names associated with the conditional variable itself must be used to make the condition-name unique.

If references to a conditional variable require subscripting, reference to any of its condition-names also requires the same combination of subscripting.

In this information, *condition-name* refers to a condition-name qualified or subscripted, as necessary.

data-name-1

Can be a record-name.

file-name-1

Must be identified by an FD or SD entry in the DATA DIVISION.

file-name-1 must be unique within this program.

mnemonic-name-1

For information about acceptable values for *mnemonic-name-1*, see "SPECIAL-NAMES paragraph" on page 95.

Index-name

An index-name identifies an index. An index can be regarded as a private special register that the compiler generates for working with a table. You name an index by specifying the INDEXED BY phrase in the OCCURS clause that defines a table.

You can use an index-name in only the following language elements:

- SET statements
- PERFORM statements
- SEARCH statements
- Subscripts
- Relation conditions

An index-name is not the same as the name of an index data item, and an index-name cannot be used like a data-name.

Index data item

An index data item is a data item that can hold the value of an index.

You define an index data item by specifying the USAGE IS INDEX clause in a data description entry. The name of an index data item is a data-name. An index data item can be used anywhere a data-name or identifier can be used, unless stated otherwise in the rules of a particular statement. You can use the SET statement to save the value of an index (referenced by index-name) in an index data item.

Record-key-name

A record-key-name is a user-defined word that names a key associated with an indexed file.

A record-key-name can be qualified using the following syntax:

```
►► record-key-name-1 ──┬─ IN ─┬── file-name-1 ►◄
                       └─ OF ─┘
```

Restriction: Record-key-name is supported for STL file system only.

Subscripting

Subscripting is a method of providing table references through the use of subscripts. A *subscript* is a positive integer whose value specifies the occurrence number of a table element.

Format

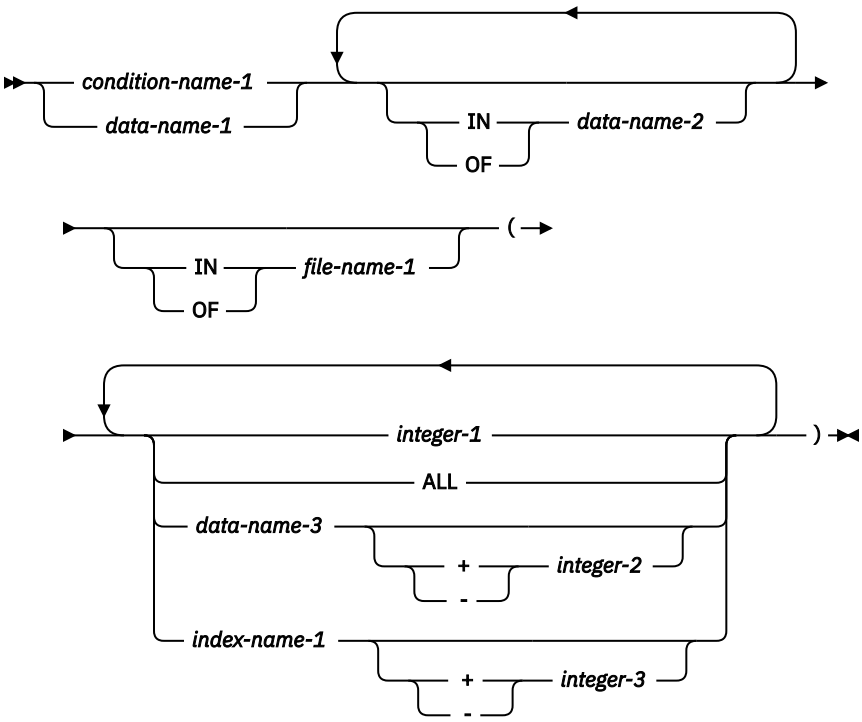

condition-name-1
The conditional variable for *condition-name-1* must contain an OCCURS clause or must be subordinate to a data description entry that contains an OCCURS clause.

data-name-1
Must contain an OCCURS clause or must be subordinate to a data description entry that contains an OCCURS clause.

data-name-2 , file-name-1
Must name data items or records that contain *data-name-1*.

integer-1
Can be signed. If signed, it must be positive.

ALL
Shall not be specified if *condition-name-1* is specified.

Must be used only when the subscripted identifier is used as an intrinsic function argument or to identify a table in a format 2 SORT statement (table SORT statement).

If ALL is specified, the subscript is all of the possible values of a subscript for the associated table as specified in the rules for the functions for which the subscript ALL is allowed.

data-name-3
Must be a numeric elementary item representing an integer.

data-name-3 can be qualified. *data-name-3* cannot be a windowed date field.

index-name-1
Corresponds to a data description entry in the hierarchy of the table being referenced that contains an INDEXED BY phrase that specifies that name.

integer-2* , *integer-3
Cannot be signed.

The subscripts, enclosed in parentheses, are written immediately following any qualification for the name of the table element. The number of subscripts in such a reference must equal the number of dimensions in the table whose element is being referenced. That is, there must be a subscript for each OCCURS clause in the hierarchy that contains the data-name including the data-name itself.

When more than one subscript is required, they are written in the order of successively less inclusive dimensions of the data organization. If a multidimensional table is thought of as a series of nested tables and the most inclusive or outermost table in the nest is considered to be the major table with the innermost or least inclusive table being the minor table, the subscripts are written from left to right in the order major, intermediate, and minor.

For example, if TABLE-THREE is defined as:

```
01  TABLE-THREE.
    05  ELEMENT-ONE OCCURS 3 TIMES.
        10  ELEMENT-TWO OCCURS 3 TIMES.
            15  ELEMENT-THREE OCCURS 2 TIMES    PIC X(8).
```

a valid subscripted reference to TABLE-THREE is:

```
ELEMENT-THREE (2 2 1)
```

Subscripted references can also be reference modified. See the third example under "Reference modification examples" on page 67. A reference to an item must not be subscripted unless the item is a table element or an item or condition-name associated with a table element.

Each table element reference must be subscripted except when such reference appears:

- In a USE FOR DEBUGGING statement
- As the subject of a SEARCH statement
- In a REDEFINES clause
- In the KEY IS phrase of an OCCURS clause
- In a format 2 SORT statement (table SORT statement)
- In a LIKE clause

In a format 2 SORT statement, subscripting may be specified with the rightmost subscript being the word ALL.

The lowest permissible occurrence number represented by a subscript is 1. The highest permissible occurrence number in any particular case is the maximum number of occurrences of the item as specified in the OCCURS clause.

Subscripting using data-names

When a data-name is used to represent a subscript, it can be used to reference items within different tables. These tables need not have elements of the same size. The same data-name can appear as the only subscript with one item and as one of two or more subscripts with another item. A data-name subscript can be qualified; it cannot be subscripted or indexed. For example, valid subscripted references to TABLE-THREE, assuming that SUB1, SUB2, and SUB3 are all items subordinate to SUBSCRIPT-ITEM, include:

```
ELEMENT-THREE (SUB1 SUB2 SUB3)

ELEMENT-THREE IN TABLE-THREE (SUB1 OF SUBSCRIPT-ITEM,
    SUB2 OF SUBSCRIPT-ITEM, SUB3 OF SUBSCRIPT-ITEM)
```

Subscripting using index-names (indexing)

Indexing allows such operations as table searching and manipulating specific items. To use indexing, you associate one or more index-names with an item whose data description entry contains an OCCURS clause.

An index associated with an index-name acts as a subscript, and its value corresponds to an occurrence number for the item to which the index-name is associated.

The INDEXED BY phrase, by which the index-name is identified and associated with its table, is an optional part of the OCCURS clause. There is no separate entry to describe the index associated with index-name. At run time, the contents of the index corresponds to an occurrence number for that specific dimension of the table with which the index is associated.

The initial value of an index at run time is undefined, and the index must be initialized before it is used as a subscript. An initial value is assigned to an index with one of the following statements:

- The PERFORM statement with the VARYING phrase
- The SEARCH statement with the ALL phrase
- The SET statement

The use of an integer or data-name as a subscript that references a table element or an item within a table element does not cause the alteration of any index associated with that table.

An index-name can be used to reference any table. However, the element length of the table being referenced and of the table that the index-name is associated with should match. Otherwise, the reference will not be to the same table element in each table, and you might get runtime errors.

Data that is arranged in the form of a table is often searched. The SEARCH statement provides facilities for producing serial and nonserial searches. It is used to search for a table element that satisfies a specific condition and to adjust the value of the associated index to indicate that table element.

To be valid during execution, an index value must correspond to a table element occurrence of neither less than one, nor greater than the highest permissible occurrence number.

For more information about index-names, see “Index-name” on page 61 and “INDEXED BY phrase” on page 180.

Relative subscripting

In *relative subscripting*, the name of a table element is followed by a subscript of the form data-name or index-name followed by the operator + or -, and a positive or unsigned integer literal.

The operators + and - must be preceded and followed by a space. The value of the subscript used is the same as if the index-name or data-name had been set up or down by the value of the integer. The use of relative indexing does not cause the program to alter the value of the index.

Reference modification

Reference modification defines a data item by specifying a leftmost character and optional length for the data item.

Format: reference modification

```
►►──┬──────────────────────────── data-name-1 ────────────────────────────►
    └── FUNCTION ── function-name-1 ──┬──────────────────────────────────┬
                                      │      ┌──────────────────┐         │
                                      │      ↓                  │         │
                                      └── ( ── argument-1 ──────┴── ) ────┘

►── ( ── leftmost-character-position ── : ──┬──────────────┬── ) ──►◄
                                            └── length ────┘
```

data-name-1
Must reference a data item described explicitly or implicitly with usage DISPLAY, DISPLAY-1, or NATIONAL. A national group item is processed as an elementary data item of category national.

data-name-1 can be qualified or subscripted. *data-name-1* cannot be a windowed date field.

data-name-1 must not refer to a Boolean data item.

data-name-1 must not refer to an item that is defined using the TYPE clause.

leftmost-character-position
Must be an arithmetic expression. The evaluation of *leftmost-character-position* must result in a positive nonzero integer that is less than or equal to the number of characters in the data item referenced by *data-name-1*.

The evaluation of *leftmost-character-position* must not result in a windowed date field.

length
Must be an arithmetic expression.

The evaluation of *length* must result in a positive nonzero integer.

The evaluation of *length* must not result in a windowed date field.

The sum of *leftmost-character-position* and *length* minus the value 1 must be less than or equal to the number of character positions in *data-name-1*. If *length* is omitted, the length used will be equal to the number of character positions in *data-name-1* plus 1, minus *leftmost-character-position*.

function-name-1
Must reference an alphanumeric or national function.

For usages DISPLAY-1 and NATIONAL, each character position occupies 2 bytes. Reference modification operates on whole character positions and not on the individual bytes of the characters in usages DISPLAY-1 and NATIONAL. For usage DISPLAY, reference modification operates as though each character were a single-byte character.

Unless otherwise specified, reference modification is allowed anywhere an identifier or function-identifier that references a data item or function with the same usage as the reference-modified data item is permitted.

Each character position referenced by *data-name-1* or *function-name-1* is assigned an ordinal number incrementing by one from the leftmost position to the rightmost position. The leftmost position is assigned the ordinal number one. If the data description entry for *data-name-1* contains a SIGN IS SEPARATE clause, the sign position is assigned an ordinal number within that data item.

If *data-name-1* is described with usage DISPLAY and category numeric, numeric-edited, alphabetic, alphanumeric-edited, or external floating-point, *data-name-1* is operated upon for purposes of reference

modification as if it were redefined as a data item of category alphanumeric with the same size as the data item referenced by *data-name-1*.

If *data-name-1* is described with usage NATIONAL and category numeric, numeric-edited, national-edited, or external floating-point, *data-name-1* is operated upon for purposes of reference modification as if it were redefined as a data item of category national with the same size as the data item referenced by *data-name-1*.

If *data-name-1* is a national group item, *data-name-1* is processed as an elementary data item of category national.

If *data-name-1* is an expanded date field, then the result of reference modification is a nondate.

Reference modification creates a unique data item that is a subset of *data-name-1* or a subset of the value referenced by *function-name-1* and its arguments, if any. This unique data item is considered an elementary data item without the JUSTIFIED clause.

When a function is reference-modified, the unique data item has class, category, and usage national if the type of the function is national; otherwise, it has class and category alphanumeric and usage display.

When *data-name-1* is reference-modified, the unique data item has the same class, category, and usage as that defined for the data item referenced by *data-name-1* except that:

- If *data-name-1* has category national-edited, the unique data item has category national.
- If *data-name-1* has usage NATIONAL and category numeric-edited, numeric, or external floating-point, the unique data item has category national.
- If *data-name-1* has usage DISPLAY, and category numeric-edited, alphanumeric-edited, numeric, or external floating-point, the unique data item has category alphanumeric.
- If *data-name-1* references an alphanumeric group item, the unique data item is considered to have usage DISPLAY and category alphanumeric.
- If *data-name-1* references a national group item, the unique data item has usage NATIONAL and category national.

If *length* is not specified, the unique data item created extends from and includes the character position identified by *leftmost-character-position* up to and including the rightmost character position of the data item referenced by *data-name-1*.

Evaluation of operands

Reference modification for an operand is evaluated as follows:

- If subscripting is specified for the operand, the reference modification is evaluated immediately after evaluation of the subscript.
- If subscripting is not specified for the operand, the reference modification is evaluated at the time subscripting would be evaluated if subscripts had been specified.

Reference modification examples

The statements in the examples transfer the first 10 characters of the data-item referenced by WHOLE-NAME to the data-item referenced by FIRST-NAME.

```
77  WHOLE-NAME  PIC X(25).
77  FIRST-NAME  PIC X(10).

77  START-P     PIC 9(4) BINARY VALUE 1.
77  STR-LENGTH  PIC 9(4) BINARY VALUE 10.

...
    MOVE WHOLE-NAME(1:10) TO FIRST-NAME.
    MOVE WHOLE-NAME(START-P:STR-LENGTH) TO FIRST-NAME.
```

The following statement transfers the last 15 characters of the data-item referenced by WHOLE-NAME to the data-item referenced by LAST-NAME.

```
77  WHOLE-NAME  PIC X(25).
77  LAST-NAME   PIC X(15).
...
    MOVE WHOLE-NAME(11:) TO LAST-NAME.
```

The following statement transfers the fourth and fifth characters of the third occurrence of TAB to the variable SUFFIX.

```
01  TABLE-1.
    02  TAB  OCCURS 10 TIMES  PICTURE X(5).
77  SUFFIX                    PICTURE X(2).
...
    MOVE TAB OF TABLE-1 (3) (4:2) TO SUFFIX.
```

Function-identifier

A *function-identifier* is a sequence of character strings and separators that uniquely references the data item that results from the evaluation of a function.

Format

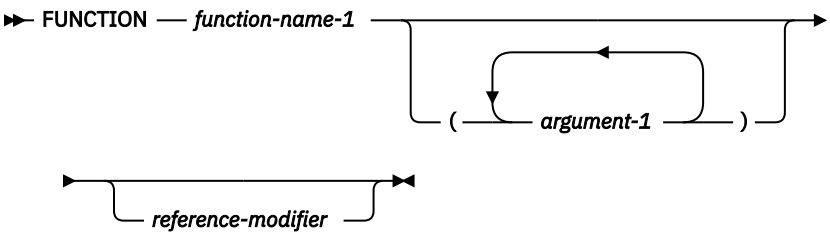

argument-1
Must be an identifier, literal (other than a figurative constant), or arithmetic expression.

For more information, see Part 7, “Intrinsic functions,” on page 423.

function-name-1
function-name-1 must be one of the intrinsic function names.

reference-modifier
Can be specified only for functions of the type alphanumeric or national.

A function-identifier that makes reference to an alphanumeric or national function can be specified anywhere that a data item of category alphanumeric or category national, respectively, can be referenced and where references to functions are not specifically prohibited, except as follows:

- As a receiving operand of any statement
- Where a data item is required to have particular characteristics (such as class and category, size, sign, and permissible values) and the evaluation of the function according to its definition and the particular arguments specified would not have these characteristics

A function-identifier that makes reference to an integer or numeric function can be used wherever an arithmetic expression can be used.

References to date-time items

A date-time function can be specified anywhere in the general formats that a date-time identifier is permitted, and where the rules associated with the general formats do not specifically prohibit reference to functions, except as follows:

- As a receiving operand of any statement
- Where the rules associated with the general formats require the data item being referenced to have particular characteristics (such as class and category, usage, size, and permissible values) and the evaluation of the function according to its definition and the particular arguments specified would not have these characteristics.

A date-time function can be referenced as an argument for a function that allows a date-time argument.

References to boolean items

A boolean function can be specified anywhere in the general formats that a boolean identifier is permitted, and where the rules associated with the general formats do not specifically prohibit reference to functions, except as follows:

- As a receiving operand of any statement
- Where the rules associated with the general formats require the data item being referenced to have particular characteristics (such as class and category, usage, size, and permissible values) and the evaluation of the function according to its definition and the particular arguments specified would not have these characteristics.

A boolean function can be referenced as an argument for a function that allows a boolean argument.

User-defined data types

A user-defined data type (or type name) is a 01 level elementary or group item that contains the TYPEDEF clause. No storage is allocated for such an item. It can be thought of as a template that describes a data name and its subordinate items.

A type name can then be used to define a data name (or another type name) by specifying it within a TYPE clause. The defined data name will have the characteristics of the type name specified in the TYPE clause. If the type name is a group item, then the defined data name will be a group item with subordinate items having the same names, hierarchy, and characteristics as the items subordinate to the type name.

When defining a data name (or type name) by using a user-defined data type in a TYPE clause, only the following clauses may be used in conjunction with the TYPE clause to complete the description of the data name:

- EXTERNAL clause
- GLOBAL clause
- OCCURS clause
- TYPEDEF clause
- VALUE clause.

The scoping rules for type names are the same as those for data names.

For more information about the TYPE and TYPEDEF clauses, refer to “TYPE clause” on page 214 and “TYPEDEF clause” on page 215.

TYPE clause

The TYPE clause allows a user-defined data type (or type name) to be used to define a data item. This is done by specifying the type name (which is declared using the TYPEDEF clause) in a TYPE clause. If the type name is a group item, then the defined data item will also be a group item: its subordinate entries will correspond in name, hierarchy, and characteristics to those subordinate to the type name.

Format

```
►►─ TYPE ── type-name-1 ─►◄
```

type-name-1
The name of the type name that is to be used to define the subject data name.

TYPEDEF clause

The TYPEDEF clause declares an elementary or group data item to be a user-defined data type (or type name). Once the type name has been defined, it can be used (in a TYPE clause) to define other data items.

Format

```
▶▶──┬──────┬──TYPEDEF──▶◀
    └─IS───┘
```

Data attribute specification

Explicit data attributes are data attributes that you specify in COBOL coding. *Implicit data attributes* are default values. If you do not explicitly code a data attribute, the compiler assumes a default value.

For example, you need not specify the USAGE of a data item. If USAGE is omitted and the symbol N is not specified in the PICTURE clause, the default is USAGE DISPLAY, which is the implicit data attribute. When PICTURE symbol N is used, USAGE DISPLAY-1 is the default when the NSYMBOL(DBCS) compiler option is in effect; USAGE NATIONAL is the default when the NSYMBOL(NATIONAL) compiler option is in effect. These are implicit data attributes.

Chapter 9. Transfer of control

In the PROCEDURE DIVISION, unless there is an *explicit* control transfer or there is no next executable statement, program flow transfers control from statement to statement in the order in which the statements are written. This normal program flow is an *implicit* transfer of control.

In addition to the implicit transfers of control between consecutive statements, implicit transfer of control also occurs when the normal flow is altered without the execution of a procedure branching statement. The following examples show *implicit* transfers of control, overriding statement-to-statement transfer of control:

- After execution of the last statement of a procedure that is executed under control of another COBOL statement, control implicitly transfers. (COBOL statements that control procedure execution are, for example, MERGE, PERFORM, SORT, and USE.) Further, if a paragraph is being executed under the control of a PERFORM statement that causes iterative execution, and that paragraph is the first paragraph in the range of that PERFORM statement, an implicit transfer of control occurs between the control mechanism associated with that PERFORM statement and the first statement in that paragraph for each iterative execution of the paragraph.
- During SORT or MERGE statement execution, control is implicitly transferred to an input or output procedure.
- During XML PARSE statement execution, control is implicitly transferred to a processing procedure.
- During execution of any COBOL statement that causes execution of a declarative procedure, control is implicitly transferred to that procedure.
- At the end of execution of any declarative procedure, control is implicitly transferred back to the control mechanism associated with the statement that caused its execution.

COBOL also provides *explicit* control transfers through the execution of any procedure branching, program call, or conditional statement. (Lists of procedure branching and conditional statements are contained in "Statement categories" on page 263.)

Definition: The term *next executable statement* refers to the next COBOL statement to which control is transferred, according to the rules given above. There is no next executable statement under the following circumstances:

- When the program contains no PROCEDURE DIVISION
- Following the last statement in a declarative section when the paragraph in which it appears is not being executed under the control of some other COBOL statement
- Following the last statement in a program when the paragraph in which it appears is not being executed under the control of some other COBOL statement in that program
- Following the last statement in a declarative section when the statement is in the range of an active PERFORM statement executed in a different section and this last statement of the declarative section is not also the last statement of the procedure that is the exit of the active PERFORM statement
- Following a STOP RUN statement or EXIT PROGRAM statement that transfers control outside the COBOL program
- Following a GOBACK statement that transfers control outside the COBOL program
- The end program marker

When there is no next executable statement and control is not transferred outside the COBOL program, the program flow of control is undefined unless the program execution is in the nondeclarative procedures portion of a program under control of a CALL statement, in which case an implicit EXIT PROGRAM statement is executed.

© Copyright IBM Corp. 2021, 2025

Chapter 10. Millennium Language Extensions and date fields

The millennium language extensions are designed to resolve the millennium problem caused by the use of two digits to represent the year in date fields of some applications, and to support the most common operations on date fields.

Many applications use two digits rather than four digits to represent the year in date fields, and assume that these values represent years from 1900 to 1999. This compact date format works well for the 1900s, but it does not work for the year 2000 and beyond because these applications interpret "00" as 1900 rather than 2000, producing incorrect results.

The millennium language extensions are designed to allow applications that use two-digit years to continue performing correctly in the year 2000 and beyond, with minimal modification to existing code. This is achieved using a technique known as *windowing*, which removes the assumption that all two-digit year fields represent years from 1900 to 1999. Instead, windowing enables two-digit year fields to represent years within a 100-year range known as a *century window*.

For example, if a two-digit year field contains the value 15, many applications would interpret the year as 1915. However, with a century window of 1960–2059, the year would be interpreted as 2015.

The millennium language extensions provide support for the most common operations on date fields: comparisons, moving and storing, and incrementing and decrementing. This support is limited to date fields of certain formats; for details, see “DATE FORMAT clause” on page 166.

For information about supported operations and restrictions when using date fields, see “Restrictions on using date fields” on page 167.

Millennium Language Extensions syntax

The millennium language extensions introduce language elements of the DATE FORMAT clause and some intrinsic functions.

- The DATE FORMAT clause in data description entries, which defines data items as date fields.
- The following intrinsic functions:

  DATEVAL
  Converts a nondate to a date field.

  UNDATE
  Converts a date field to a nondate.

  YEARWINDOW
  Returns the first year of the century window specified by the YEARWINDOW compiler option.

For details on using the millennium language extensions in applications, see *Millennium language extensions (MLE)* in the *COBOL for Linux on x86 Programming Guide*.

The millennium language extensions have no effect unless your program is compiled using the DATEPROC compiler option and the century window is specified by the YEARWINDOW compiler option.

Terms and concepts

See the following terms when the document refers to the millennium language extensions.

- “Date field” on page 74
- “Nondate” on page 75
- “Century window” on page 75

© Copyright IBM Corp. 2021, 2025

Date field

A *date field* can be one of several items.

These are the possible date fields:

- A data item whose data description entry includes a DATE FORMAT clause
- A value returned by one of the following intrinsic functions:
  - DATE-OF-INTEGER
  - DATE-TO-YYYYMMDD
  - DATEVAL
  - DAY-OF-INTEGER
  - DAY-TO-YYYYDDD
  - YEAR-TO-YYYY
  - YEARWINDOW
- The conceptual data items DATE, DATE YYYYMMDD, DAY, or DAY YYYYDDD of the ACCEPT statement
- The result of certain arithmetic operations (for details, see "Arithmetic with date fields" on page 237)

The term *date field* refers to both *expanded date fields* and *windowed date fields*.

Windowed date field

A *windowed date field* is a date field that contains a windowed year. A *windowed year* consists of two digits, representing a year within the century window.

Expanded date field

An *expanded date field* is a date field that contains an expanded year. An *expanded year* consists of four digits.

The main use of expanded date fields is to provide correct results when these are used in combination with windowed date fields; for example, where migration to four-digit year dates is not complete. If all the dates in an application use four-digit years, there is no need to use the millennium language extensions.

Year-last date field

A *year-last date field* is a date field whose DATE FORMAT clause specifies one or more Xs preceding the YY or YYYY. Year-last date fields are supported in a limited number of operations, typically involving another date with the same (year-last) date format, or a nondate.

Date format

Date format refers to the date pattern of a date field, specified either:

- Explicitly, by the DATE FORMAT clause or DATEVAL intrinsic function *argument-2*
- Implicitly, by statements and intrinsic functions that return date fields.

Compatible date field

The meaning of the term *compatible*, when applied to date fields, depends on the COBOL division in which the date field occurs:

Data division

Two date fields are compatible if they have identical USAGE and meet at least one of the following conditions:

- They have the same date format.

- Both are windowed date fields, where one consists only of a windowed year, DATE FORMAT YY.
- Both are expanded date fields, where one consists only of an expanded year, DATE FORMAT YYYY.
- One has DATE FORMAT YYXXXX, the other, YYXX.
- One has DATE FORMAT YYYYXXXX, the other, YYYYXX.

A windowed date field can be subordinate to an expanded date group data item. The two date fields are compatible if the subordinate date field has USAGE DISPLAY, starts 2 bytes after the start of the group expanded date field, and the two fields meet at least one of the following conditions:

- The subordinate date field has a DATE FORMAT pattern with the same number of Xs as the DATE FORMAT pattern of the group date field.
- The subordinate date field has DATE FORMAT YY.
- The group date field has DATE FORMAT YYYYXXXX and the subordinate date field has DATE FORMAT YYXX.

Procedure division

Two date fields are compatible if they have the same date format except for the year part, which can be windowed or expanded. For example, a windowed date field with DATE FORMAT YYXXX is compatible with:

- Another windowed date field with DATE FORMAT YYXXX
- An expanded date field with DATE FORMAT YYYYXXX

Nondate

A *nondate* can be any of several items.

These are the possible nondates:

- A data item whose date description entry does not include the DATE FORMAT clause
- A date field that has been converted using the UNDATE function
- A literal
- A reference-modified date field
- The result of certain arithmetic operations that can include date field operands; for example, the difference between two compatible date fields

Century window

A *century window* is a 100-year interval within which any two-digit year is unique.

There are several ways to specify a century window in a COBOL program:

- For windowed date fields, a century window is specified by the YEARWINDOW compiler option.
- For windowing intrinsic functions DATE-TO-YYYYMMDD, DAY-TO-YYYYDDD, and YEAR-TO-YYYY, a century window is specified by *argument-2*.

Part 2. COBOL program structure

A COBOL source program is a syntactically correct set of COBOL statements.

Nested programs
A *nested program* is a program that is contained in another program. Contained programs can reference some of the resources of the programs that contain them. If program B is contained in program A, it is *directly* contained if there is no program contained in program A that also contains program B. Program B is *indirectly* contained in program A if there exists a program contained in program A that also contains program B. For more information about nested programs, see *Nested programs* in the *COBOL for Linux on x86 Programming Guide*.

Object program
An *object program* is a set or group of executable machine language instructions and other material designed to interact with data to provide problem solutions. An object program is generally the machine language result of the operation of a COBOL compile on a source program.

Run unit
A *run unit* is one or more object programs that interact with one another and that function at run time as an entity to provide problem solutions.

Sibling program
Sibling programs are programs that are directly contained in the same program.

With the exception of the COPY and REPLACE statements and the end program marker, the statements, entries, paragraphs, and sections of a COBOL source program are grouped into the following four divisions:

- IDENTIFICATION DIVISION
- ENVIRONMENT DIVISION
- DATA DIVISION
- PROCEDURE DIVISION

The end of a COBOL source program is indicated by the END PROGRAM marker. If there are no nested programs, the absence of additional source program lines also indicates the end of a COBOL program.

The following format is for the entries and statements that constitute a separately compiled COBOL source program.

© Copyright IBM Corp. 2021, 2025

Format: COBOL source program

```
▶▶─┬─ IDENTIFICATION ─┬─ DIVISION. ── PROGRAM-ID ─┬─────┬─ program-name-1 ──▶
   └──────── ID ──────┘                          └─ . ─┘

   ▶─┬─────────────────────────────────────────────────────────────────┬─┬─ . ─┬──▶
     │ ┌─────┐ ┌─────────────┐ ┌─────────┐                             │ │     │
     └─┴─ IS ─┴─┬─ RECURSIVE ─┬─┴─ PROGRAM ─┴─────────────────────────────┘ └─────┘
                └─ INITIAL ───┘

   ▶─┬─────────────────────────────────────────────┬──▶
     └─ identification-division-content ─────────── ┘

   ▶─┬─────────────────────────────────────────────────────────────────────────┬──▶
     └─ ENVIRONMENT DIVISION. ── environment-division-content ─────────────────┘

   ▶─┬─────────────────────────────────────────────────────────────┬──▶
     └─ DATA DIVISION. ── data-division-content ─────────────────── ┘

   ▶─┬─────────────────────────────────────────────────────────────────────┬──▶
     └─ PROCEDURE DIVISION. ── procedure-division-content ─────────────────┘

   ▶─┬─────────────────────────────────────────────────────────────────────────┬──▶◀
     │                                                                         │
     │   ┌──────────────────────────────────────────────────────────────┐      │
     │   ▼                                                              │      │
     │   ┌──────────────────────────┐                                   │      │
     │   │ Nested source program    │                                   │      │
     │   └──────────────────────────┘                                   │      │
     │   ▲                                                              │      │
     │   └──────────────────────────────────────────────────────────────┘      │
     └─ END PROGRAM ── program-name-1. ──────────────────────────────────────── ┘
```

nested source program

```
▶▶─┬─ IDENTIFICATION ─┬─ DIVISION. ── PROGRAM-ID ─┬─────┬─ program-name-2 ──▶
   └──────── ID ──────┘                          └─ . ─┘

   ▶─┬─────────────────────────────────────────────────────────────────────────┬─┬─ . ─┬──▶
     │ ┌─────┐ ┌─────────────┐ ┌─────────┐ ┌─────────┐                         │ │     │
     └─┴─ IS ─┴─┬─ COMMON ────┬─┴─ INITIAL ─┴─┬─ PROGRAM ─┴─────────────────────┘ └─────┘
                │             │               │
                └─ INITIAL ───┴─ COMMON ──────┘

   ▶─┬─────────────────────────────────────────────┬──▶
     └─ identification-division-content ─────────── ┘

   ▶─┬─────────────────────────────────────────────────────────────────────────┬──▶
     └─ ENVIRONMENT DIVISION. ── environment-division-content ─────────────────┘

   ▶─┬─────────────────────────────────────────────────────────────┬──▶
     └─ DATA DIVISION. ── data-division-content ─────────────────── ┘

   ▶─┬─────────────────────────────────────────────────────────────────────┬──▶
     └─ PROCEDURE DIVISION. ── procedure-division-content ─────────────────┘

   ▶─┬─────────────────────────────────────────────────────────────────────────┬──▶◀
     │                                                                         │
     │   ┌──────────────────────────────────────────────────────────────┐      │
     │   ▼                                                              │      │
     │   ┌──────────────────────────┐                                   │      │
     │   │ | nested source program |                                   │      │
     │   └──────────────────────────┘                                   │      │
     │   ▲                                                              │      │
     │   └──────────────────────────────────────────────────────────────┘      │
     └─ END PROGRAM ── program-name-2. ──────────────────────────────────────── ┘
```

A sequence of separate COBOL programs can also be input to the compiler. The following format is for the entries and statements that constitute a sequence of source programs (batch compile).

Format: sequence of COBOL source programs

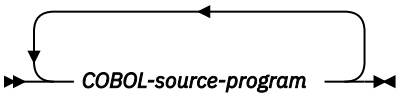

END PROGRAM *program-name*

An end program marker separates each program in the sequence of programs. *program-name* must be identical to a program-name declared in a preceding program-ID paragraph.

program-name can be specified either as a user-defined word or in an alphanumeric literal. Either way, *program-name* must follow the rules for forming program-names. *program-name* cannot be a figurative constant. Any lowercase letters in the literal are folded to uppercase.

An end program marker is optional for the last program in the sequence only if that program does not contain any nested source programs.

Chapter 11. Nested programs

A COBOL program can contain other COBOL programs, which in turn can contain still other COBOL programs. These contained programs are called *nested programs*. Nested programs can be *directly* or *indirectly* contained in the containing program.

In the following code fragment, program `Outer-program` *directly* contains program `Inner-1`. Program `Inner-1` *directly* contains program `Inner-1a`, and `Outer-program` *indirectly* contains `Inner-1a`:

```
Id division.
Program-id. Outer-program.
  Procedure division.
    Call "Inner-1".
    Stop run.
Id division.
  Program-id. Inner-1
  ...
    Call Inner-1a.
    Stop run.
  Id division.
  Program-id. Inner-1a.
  ...
  End Inner-1a.
  End Inner-1.
End Outer-program.
```

The following figure describes a more complex nested program structure with directly and indirectly contained programs.

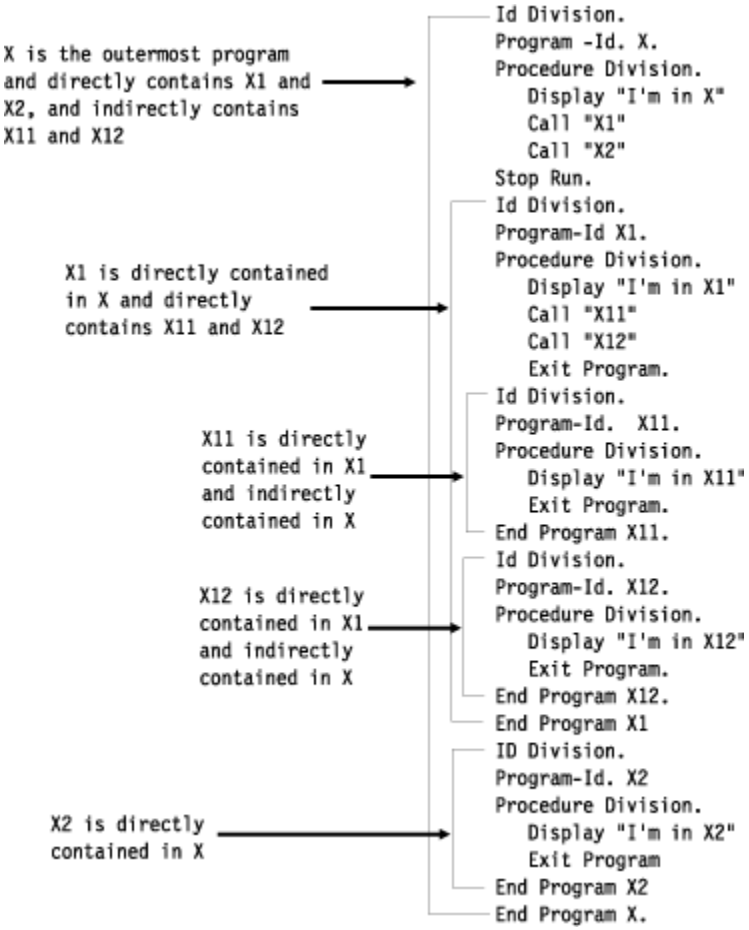

© Copyright IBM Corp. 2021, 2025

Conventions for program-names

The program-name of a program is specified in the PROGRAM-ID paragraph of the program's IDENTIFICATION DIVISION. A program-name can be referenced only by the CALL statement, the CANCEL statement, the SET statement, or the END PROGRAM marker.

Names of programs that constitute a run unit are not necessarily unique, but when two programs in a run unit are identically named, at least one of the programs must be directly or indirectly contained within another separately compiled program that does not contain the other of those two programs.

A separately compiled program and all of its directly and indirectly contained programs must have unique program-names within that separately compiled program.

Rules for program-names

The following rules define the scope of a program-name:

- If the program-name is that of a program that does not possess the COMMON attribute and that program is directly contained within another program, that program-name can be referenced only by statements included in that containing program.
- If the program-name is that of a program that does possess the COMMON attribute and that program is directly contained within another program, that program-name can be referenced only by statements included in the containing program and any programs directly or indirectly contained within that containing program, except that program possessing the COMMON attribute and any programs contained within it.
- If the program-name is that of a program that is separately compiled, that program-name can be referenced by statements included in any other program in the run unit, except programs it directly or indirectly contains.

The mechanism used to determine which program to call is as follows:

- If one of two programs that have the same name as that specified in the CALL statement is directly contained within the program that includes the CALL statement, that program is called.
- If one of two programs that have the same name as that specified in the CALL statement possesses the COMMON attribute and is directly contained within another program that directly or indirectly contains the program that includes the CALL statement, that common program is called unless the calling program is contained within that common program.
- Otherwise, the separately compiled program is called.

The following rules apply to referencing a program-name of a program that is contained within another program. For this discussion, Program-A contains Program-B and Program-C; Program-C contains Program-D and Program-F; and Program-D contains Program-E.

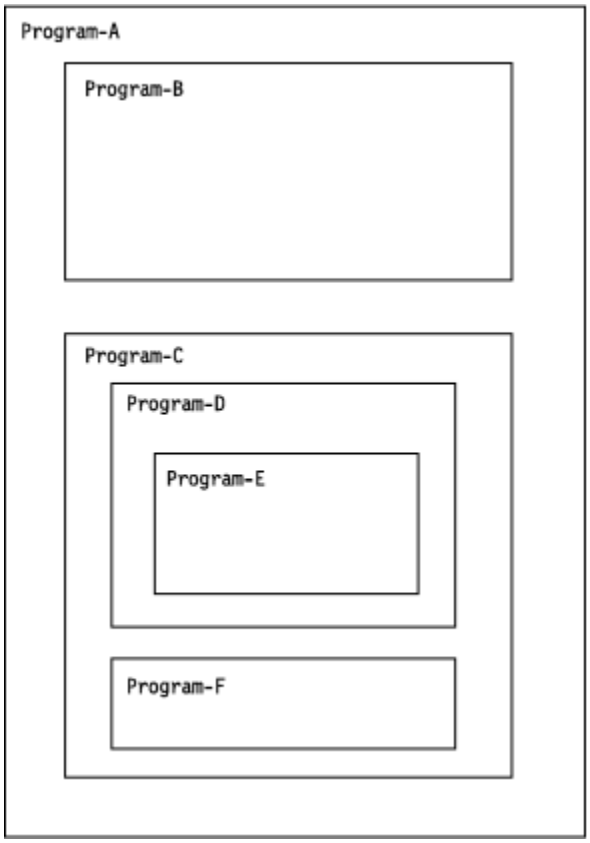

If Program-D does not possess the COMMON attribute, then Program-D can be referenced only by the program that directly contains Program-D, that is, Program-C.

If Program-D does possess the COMMON attribute, then Program-D can be referenced by Program-C (because Program-C contains Program-D) and by any programs contained in Program-C except for programs contained in Program-D. In other words, if Program-D possesses the COMMON attribute, Program-D can be referenced in Program-C and Program-F but not by statements in Program-E, Program-A, or Program-B.

Part 3. IDENTIFICATION DIVISION

The IDENTIFICATION DIVISION must be the first division in each COBOL source program. The IDENTIFICATION DIVISION can include the date a program was written, the date of compilation, and other such documentary information.

Program IDENTIFICATION DIVISION

For a program, the first paragraph of the IDENTIFICATION DIVISION must be the PROGRAM-ID paragraph. The other paragraphs are optional and can appear in any order.

The following format is for a program IDENTIFICATION DIVISION.

© Copyright IBM Corp. 2021, 2025

Format: program identification division

```
►►─┬─IDENTIFICATION─┬─DIVISION.─PROGRAM-ID─┬──────┬─program-name─►
   └──────ID────────┘                     └──.───┘

►─┬──────────────
```

Chapter 12. PROGRAM-ID paragraph

The PROGRAM-ID paragraph specifies the name by which the program is known and assigns selected program attributes to that program. It is required and must be the first paragraph in the IDENTIFICATION DIVISION.

program-name

A user-defined word or alphanumeric literal, but not a figurative constant, that identifies your program. It must follow the following rules of formation, depending on the setting of the PGMNAME compiler option:

PGMNAME (LONGUPPER)

If *program-name* is a user-defined word, it can be up to 30 characters in length.

If *program-name* is an alphanumeric literal, the literal can be up to 160 characters in length. The literal cannot be a figurative constant.

Only the hyphen, underscore, digits 0-9, and alphabetic characters are allowed in the name when the name is specified as a user-defined word.

At least one character must be alphabetic.

The hyphen cannot be the first or last character.

If *program-name* is an alphanumeric literal, the underscore character can be the first character.

External program-names are processed with alphabetic characters folded to uppercase.

PGMNAME (LONGMIXED)

program-name must be specified as an alphnumeric literal, which can be up to 160 characters in length. The literal cannot be a figurative constant.

Wherever alphabetic characters are allowed, you can use multibyte characters.

For information about the PGMNAME compiler option and how the compiler processes the names, see *PGMNAME* in the *COBOL for Linux on x86 Programming Guide*.

RECURSIVE

An optional clause that allows COBOL programs to be recursively reentered.

You can specify the RECURSIVE clause only on the outermost program of a compilation unit. Recursive programs cannot contain nested subprograms.

If the RECURSIVE clause is specified, *program-name* can be recursively reentered while a previous invocation is still active. If the RECURSIVE clause is not specified, an active program cannot be recursively reentered.

The WORKING-STORAGE SECTION of a recursive program defines storage that is statically allocated and initialized on the first entry to a program and is available in a last-used state to any of the recursive invocations.

The LOCAL-STORAGE SECTION of a recursive program (as well as a nonrecursive program) defines storage that is automatically allocated, initialized, and deallocated on a per-invocation basis.

Internal file connectors that correspond to an FD in the FILE SECTION of a recursive program are statically allocated. The status of internal file connectors is part of the last-used state of a program that persists across invocations.

The following language elements are not supported in a recursive program:

- ALTER
- GO TO without a specified procedure-name

© Copyright IBM Corp. 2021, 2025

- RERUN
- SEGMENT-LIMIT
- USE FOR DEBUGGING

COMMON
Specifies that the program named by *program-name* is contained (that is, nested) within another program and can be called from siblings of the common program and programs contained within them. The COMMON clause can be used only in nested programs. For more information about conventions for program names, see "Conventions for program-names" on page 82.

INITIAL
Specifies that when *program-name* is called, *program-name* and any programs contained (nested) within it are placed in their initial state.

A program is in the initial state:

- The first time the program is called in a run unit
- Every time the program is called, if it possesses the initial attribute
- The first time the program is called after the execution of a CANCEL statement that references the program or a CANCEL statement that references a program that directly or indirectly contains the program
- The first time the program is called after the execution of a CALL statement that references a program that possesses the initial attribute and that directly or indirectly contains the program

When a program is in the initial state:

- The program's internal data contained in the WORKING-STORAGE SECTION is initialized. If a VALUE clause is used in the description of the data item, the data item is initialized to the defined value. If a VALUE clause is not associated with a data item, the initial value of the data item is undefined.
- Files with internal file connectors associated with the program are not in the open mode.
- The control mechanisms for all PERFORM statements contained in the program are set to their initial states.
- An altered GO TO statement contained in the program is set to its initial state.

For the rules governing nonunique program names, see "Rules for program-names" on page 82.

Chapter 13. Optional paragraphs

Some optional paragraphs in the IDENTIFICATION DIVISION can be omitted.

The optional paragraphs are:

AUTHOR
Name of the author of the program.

INSTALLATION
Name of the company or location.

DATE-WRITTEN
Date the program was written.

DATE-COMPILED
The DATE-COMPILED paragraph provides the compilation date in the source listing. If a comment-entry is specified, the entire entry is replaced with the current date, even if the entry spans lines. If the comment entry is omitted, the compiler adds the current date to the line on which DATE-COMPILED is printed. For example:

```
DATE-COMPILED. 06/30/10.
```

SECURITY
Level of confidentiality of the program.

The *comment-entry* in any of the optional paragraphs can be any combination of characters from the character set of the computer. The comment-entry is written in Area B on one or more lines.

Comment-entries serve only as documentation; they do not affect the meaning of the program. A hyphen in the indicator area (column 7) is not permitted in comment-entries.

You can include multibyte as well as single-byte characters from an EUC, UTF-8, or DBCS code page in comment-entries in the IDENTIFICATION DIVISION of your program. Multiple lines are allowed in a comment-entry that contains multibyte characters.

© Copyright IBM Corp. 2021, 2025

Part 4. Environment division

© Copyright IBM Corp. 2021, 2025

Chapter 14. Configuration section

The configuration section is an optional section for programs, and can describe the computer environment on which the program or class is compiled and executed.

Program configuration section

The configuration section can be specified only in the ENVIRONMENT DIVISION of the outermost program of a COBOL source program.

You should not specify the configuration section in a program that is contained within another program. The entries specified in the configuration section of a program apply to any program contained within that program.

Format:

```
►► CONFIGURATION SECTION. ──┬──────────────────────────┬──►
                            └─ source-computer-paragraph ─┘

►──┬──────────────────────────┬──┬──────────────────────────┬──►◄
   └─ object-computer-paragraph ─┘  └─ special-names-paragraph ─┘
```

The configuration section can:

- Relate IBM-defined environment-names to user-defined mnemonic names
- Specify the collating sequence
- Specify a currency sign value, and the currency symbol used in the PICTURE clause to represent the currency sign value
- Exchange the functions of the comma and the period in PICTURE clauses and numeric literals
- Relate alphabet-names to character sets or collating sequences
- Specify symbolic characters
- Specify the default formats for a date or time data type

SOURCE-COMPUTER paragraph

The SOURCE-COMPUTER paragraph describes the computer on which the source text is to be compiled.

Format

```
►► SOURCE-COMPUTER. ──►

►──┬──────────────────────────────────────────────┬──►◄
   └─ computer-name ──┬──────────────────────┬──┬─ . ─┘
                      │                      │  │
                      │                      └─ DEBUGGING MODE ─┘
                      └─ WITH ─┘
```

computer-name

A system-name. For example:

```
IBM-system
```

© Copyright IBM Corp. 2021, 2025

WITH DEBUGGING MODE

Activates a compile-time switch for debugging lines written in the source text.

A *debugging line* is a statement that is compiled only when the compile-time switch is activated. Debugging lines allow you, for example, to check the value of a data-name at certain points in a procedure.

To specify a debugging line in your program, code a D in column 7 (indicator area). You can include successive debugging lines, but each must have a D in column 7, and you cannot break character strings across lines.

All your debugging lines must be written so that the program is syntactically correct, whether the debugging lines are compiled or treated as comments.

The presence or absence of the DEBUGGING MODE clause is logically determined after all COPY and REPLACE statements have been processed.

You can code debugging lines in the ENVIRONMENT DIVISION (after the OBJECT-COMPUTER paragraph), and in the data and procedure divisions.

If a debugging line contains only spaces in Area A and in Area B, the debugging line is treated the same as a blank line.

All of the SOURCE-COMPUTER paragraph is syntax checked, but only the WITH DEBUGGING MODE clause has an effect on the execution of the program.

OBJECT-COMPUTER paragraph

The OBJECT-COMPUTER paragraph specifies the system for which the object program is designated.

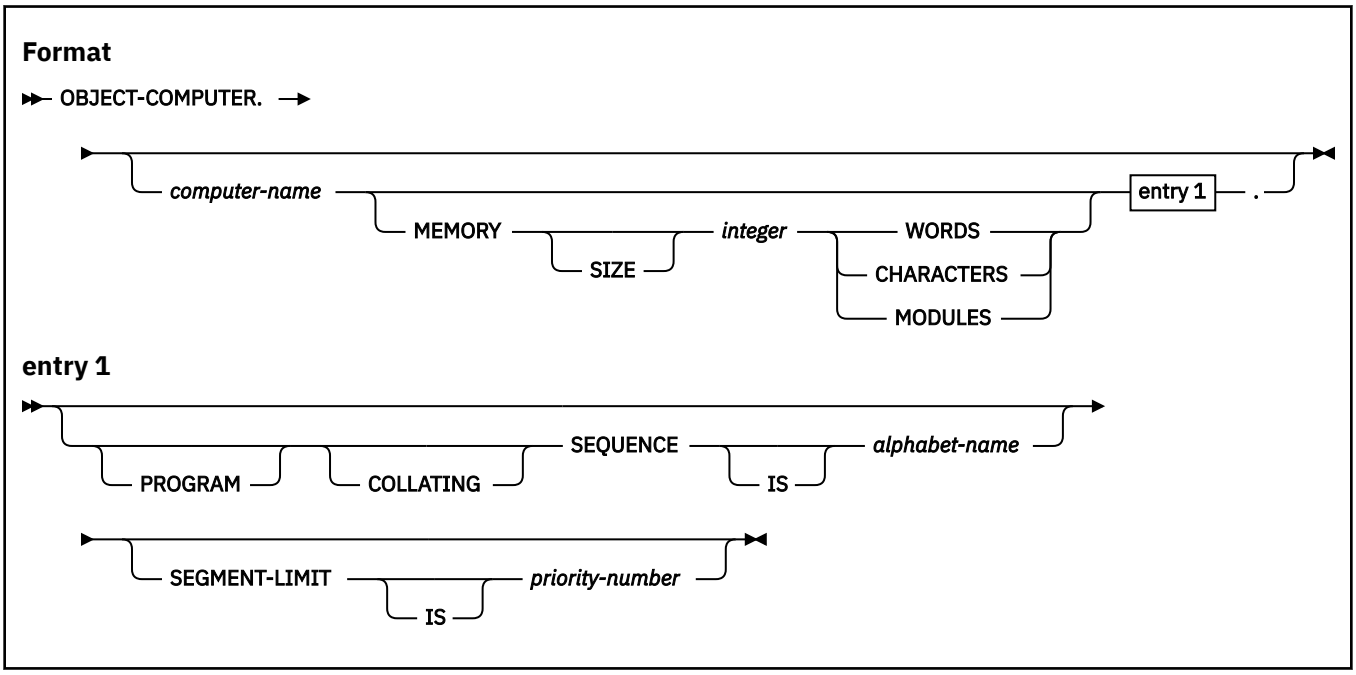

computer-name

A system-name. For example:

```
IBM-system
```

MEMORY SIZE *integer*

integer specifies the amount of main storage needed to run the object program, in words, characters or modules. The MEMORY SIZE clause is syntax checked but has no effect on the execution of the program.

PROGRAM COLLATING SEQUENCE IS *alphabet-name*

The collating sequence used in this program is the collating sequence associated with the specified *alphabet-name*.

The collating sequence pertains to this program and to any programs that this program might contain.

PROGRAM COLLATING SEQUENCE determines the truth value of the following alphanumeric comparisons:

- Those explicitly specified in relation conditions
- Those explicitly specified in condition-name conditions

The PROGRAM COLLATING SEQUENCE clause also applies to any merge or sort keys described with usage DISPLAY, unless the COLLATING SEQUENCE phrase is specified in the MERGE or SORT statement.

The PROGRAM COLLATING SEQUENCE clause does not apply to data items of usage NATIONAL.

You cannot specify the PROGRAM COLLATING SEQUENCE clause if the source code page is a multibyte code page.

If the PROGRAM COLLATING SEQUENCE clause is omitted, the COLLSEQ compiler option indicates the collating sequence used. For example, if COLLSEQ(EBCDIC) is specified and the PROGRAM COLLATING SEQUENCE clause is not specified (or is NATIVE), the EBCDIC collating sequence is used.

SEGMENT-LIMIT IS

The SEGMENT-LIMIT clause is syntax checked but has no effect on the execution of the program.

priority-number

An integer ranging from 1 through 49. This value is syntax checked but has no effect on the execution of the program.

All of the OBJECT-COMPUTER paragraph is syntax checked, but only the PROGRAM COLLATING SEQUENCE clause has an effect on the execution of the program.

SPECIAL-NAMES paragraph

The SPECIAL-NAMES paragraph is the name of an ENVIRONMENT DIVISION paragraph in which environment-names are related to user-specified mnemonic-names.

The SPECIAL-NAMES paragraph:

- Relates IBM-specified environment-names to user-defined mnemonic-names
- Relates alphabet-names to character sets or collating sequences
- Specifies symbolic characters
- Relates class names to sets of characters
- Specifies one or more currency sign values and defines a picture symbol to represent each currency sign value in PICTURE clauses
- Specifies that the functions of the comma and decimal point are to be interchanged in PICTURE clauses and numeric literals
- Specifies the default formats for a date and or time data type
- Relates locale object names and their associated library to user-defined mnemonic-names

The clauses in the SPECIAL-NAMES paragraph can appear in any order.

Format: SPECIAL-NAMES paragraph

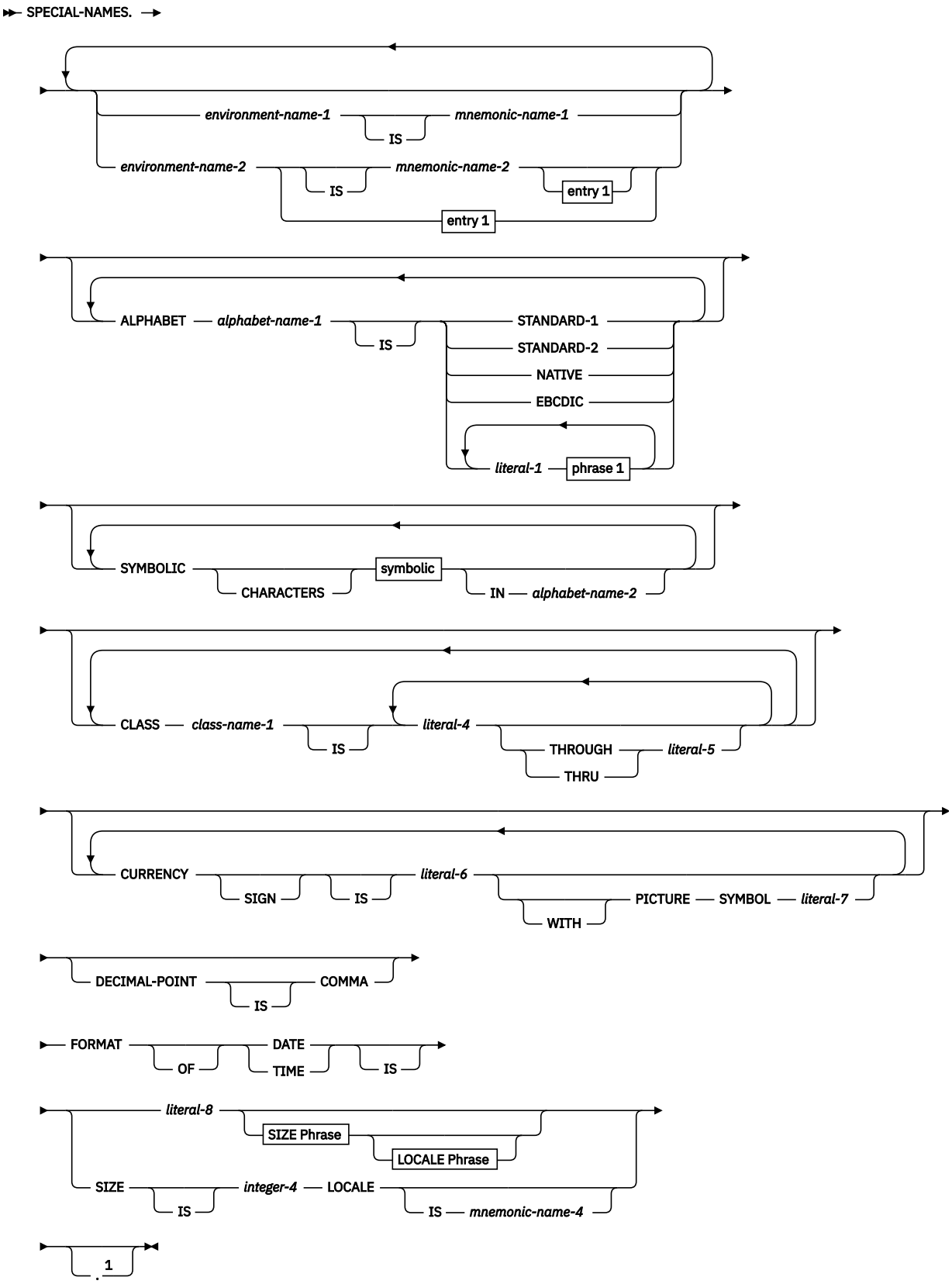

Notes:

[1] This separator period is optional when no clauses are selected. If you use any clauses, you must code the period after the last clause.

Fragments
entry 1

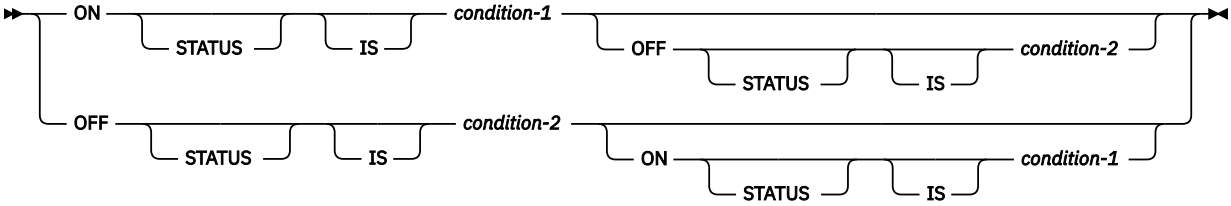

phrase 1

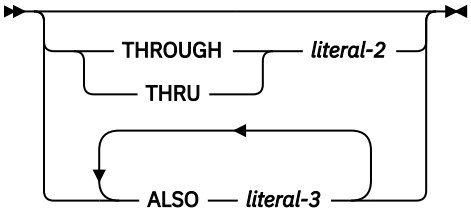

symbolic

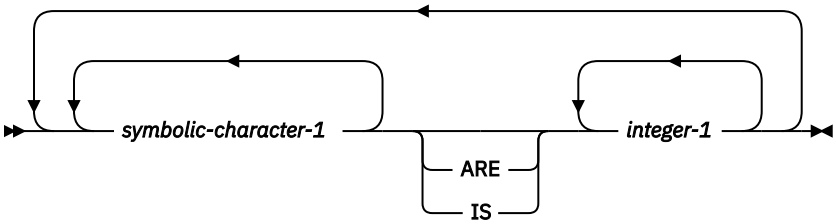

SIZE Phrase

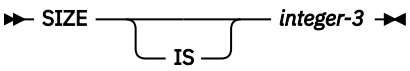

LOCALE Phrase

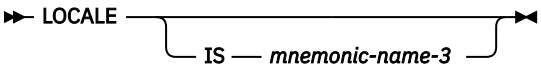

When the source code page is a multibyte code page, the following clauses cannot be specified:

- ALPHABET clause
- CLASS clause
- SYMBOLIC characters clause

environment-name-1
System devices or standard system actions taken by the compiler.

Valid specifications for *environment-name-1* are shown in the following table.

Table 5. ***Meanings of environment names***		
environment-name-1	**Meaning**	**Allowed in**
SYSIN SYSIPT	System logical input unit	ACCEPT
SYSOUT SYSLIST SYSLST	System logical output unit	DISPLAY
SYSPUNCH SYSPCH	System punch device	DISPLAY
CONSOLE	Console	ACCEPT and DISPLAY
C01 through C12	Skip to channel 1 through channel 12, respectively	WRITE ADVANCING With C01 through C12, one line is advanced.
CSP	Suppress spacing	WRITE ADVANCING
S01 through S05	Pocket select 1 through 5 on punch devices	WRITE ADVANCING With S01 through S05, one line is advanced.
AFP-5A	Advanced Function Printing	WRITE ADVANCING

environment-name-2
A 1-byte user-programmable status indicator (UPSI) switch. Valid specifications for *environment-name-2* are UPSI-0 through UPSI-7.

mnemonic-name-1 , mnemonic-name-2
mnemonic-name-1 and *mnemonic-name-2* follow the rules of formation for user-defined names. *mnemonic-name-1* can be used in ACCEPT, DISPLAY, and WRITE statements. *mnemonic-name-2* can be referenced only in the SET statement. *mnemonic-name-2* can qualify *condition-1* or *condition-2* names.

Mnemonic-names and environment-names need not be unique. If you choose a mnemonic-name that is also an environment-name, its definition as a mnemonic-name will take precedence over its definition as an environment-name.

ON STATUS IS, OFF STATUS IS
UPSI switches process special conditions within a program, such as year-beginning or year-ending processing. For example, at the beginning of the PROCEDURE DIVISION, an UPSI switch can be tested; if it is ON, the special branch is taken. (See "Switch-status condition" on page 256.)

condition-1, condition-2
Condition-names follow the rules for user-defined names. At least one character must be alphabetic. The value associated with the condition-name is considered to be alphanumeric. A condition-name can be associated with the on status or off status of each UPSI switch specified.

In the PROCEDURE DIVISION, the UPSI switch status is tested through the associated condition-name. Each condition-name is the equivalent of a level-88 item; the associated mnemonic-name, if specified, is considered the conditional variable and can be used for qualification.

Condition-names specified in the SPECIAL-NAMES paragraph of a containing program can be referenced in any contained program.

ALPHABET clause

The ALPHABET clause provides a means of relating an alphabet-name to a specified character code set or collating sequence.

The related character code set or collating sequence can be used for alphanumeric data, but not for national data.

ALPHABET *alphabet-name-1* IS

alphabet-name-1 specifies a *collating sequence* when used in:

- The PROGRAM COLLATING SEQUENCE clause of the object-computer paragraph
- The COLLATING SEQUENCE phrase of the SORT or MERGE statement

alphabet-name-1 specifies a character code set when used in:

- The FD entry CODE-SET clause
- The SYMBOLIC CHARACTERS clause

You cannot specify the ALPHABET clause if the source code page in effect is a multibyte code page. For details, see *Specifying the collating sequence* in the *COBOL for Linux on x86 Programming Guide*.

STANDARD-1
Specifies that the collating sequence is based on the binary code values of the characters, ignoring the locale setting.

STANDARD-2
Specifies that the collating sequence is based on the binary code values of the characters, ignoring the locale setting.

NATIVE
Specifies the native character code set. If the ALPHABET clause is omitted, the alphabet-name is associated with the ASCII, UTF-8, or EUC character set indicated by the locale in effect.

EBCDIC
Specifies the EBCDIC character set.

literal-1* , *literal-2* , *literal-3
Specifies that the collating sequence for alphanumeric data is determined by the program, according to the following rules:

- The order in which literals appear specifies the ordinal number, in ascending sequence, of the characters in this collating sequence.
- Each numeric literal specified must be an unsigned integer.
- Each numeric literal must have a value that corresponds to a valid ordinal position within the collating sequence in effect.

  See "EBCDIC and ASCII collating sequences" on page 610 for the ordinal numbers for characters in the single-byte EBCDIC and ASCII collating sequences.
- Each character in an alphanumeric literal represents that actual character in the character set. (If the alphanumeric literal contains more than one character, each character, starting with the leftmost, is assigned a successively ascending position within this collating sequence.)
- Any characters that are not explicitly specified assume positions in this collating sequence higher than any of the explicitly specified characters. The relative order within the collating sequence of these unspecified characters is their relative order in the collating sequence indicated by the COLLSEQ compiler option.
- Within one alphabet-name clause, a given character must not be specified more than once.
- Each alphanumeric literal associated with a THROUGH or ALSO phrase must be one character in length.

- When the THROUGH phrase is specified, the contiguous characters in the native character set beginning with the character specified by *literal-1* and ending with the character specified by *literal-2* are assigned successively ascending positions in this collating sequence.

  This sequence can be either ascending or descending within the original native character set. That is, if "Z" THROUGH "A" is specified, the ascending values, left-to-right, for the uppercase letters are:

  ```
  ZYXWVUTSRQPONMLKJIHGFEDCBA
  ```

- When the ALSO phrase is specified, the characters specified as *literal-1*, *literal-3*, ... are assigned to the same position in this collating sequence. For example, if you specify:

  ```
  "D" ALSO "N" ALSO "%"
  ```

  the characters D, N, and % are all considered to be in the same position in the collating sequence.
- When the ALSO phrase is specified and *alphabet-name-1* is referenced in a SYMBOLIC CHARACTERS clause, only *literal-1* is used to represent the character in the character set.
- The character that has the highest ordinal position in this collating sequence is associated with the figurative constant HIGH-VALUE. If more than one character has the highest position because of specification of the ALSO phrase, the last character specified (or defaulted to when any characters are not explicitly specified) is considered to be the HIGH-VALUE character for procedural statements such as DISPLAY and as the sending field in a MOVE statement. (If the ALSO phrase example given above were specified as the high-order characters of this collating sequence, the HIGH-VALUE character would be %.)
- The character that has the lowest ordinal position in this collating sequence is associated with the figurative constant LOW-VALUE. If more than one character has the lowest position because of specification of the ALSO phrase, the first character specified is the LOW-VALUE character. (If the ALSO phrase example given above were specified as the low-order characters of the collating sequence, the LOW-VALUE character would be D.)

When *literal-1*, *literal-2*, or *literal-3* is specified, the alphabet-name must not be referred to in a CODE-SET clause (see "CODE-SET clause" on page 160).

literal-1, *literal-2*, and *literal-3* must be alphanumeric or numeric literals. All must have the same category. A floating-point literal, a national literal, a DBCS literal, or a symbolic-character figurative constant must not be specified.

CLASS clause

The CLASS clause provides a means for relating a name to the specified set of characters listed in that clause.

You cannot specify the CLASS clause if the source code page in effect is a multibyte code page.

CLASS *class-name-1* IS
Provides a means for relating a name to the specified set of characters listed in that clause. *class-name-1* can be referenced only in a class condition. The characters specified by the values of the literals in this clause define the exclusive set of characters of which this class consists.

literal-4*, *literal-5
Must be category numeric or alphanumeric, and both must be of the same category.

If numeric, *literal-4* and *literal-5* must be unsigned integers and must have a value that is greater than or equal to 1 and less than or equal to the number of characters in the alphabet specified. Each number corresponds to the ordinal position of each character in the single-byte EBCDIC or ASCII collating sequence. They cannot be specified as floating-point literals or as DBCS literals.

If alphanumeric, *literal-4* and *literal-5* are an actual single-byte EBCDIC or single-byte ASCII character.

literal-4 and *literal-5* must not specify a symbolic-character figurative constant. If the value of the alphanumeric literal contains multiple characters, each character in the literal is included in the set of characters identified by class-name.

If the alphanumeric literal is associated with a THROUGH phrase, the literal must be one character in length.

THROUGH, THRU
THROUGH and THRU are equivalent. If THROUGH is specified, class-name includes those characters that begin with the value of *literal-4* and that end with the value of *literal-5*. In addition, the characters specified by a THROUGH phrase can be in either ascending or descending order.

CURRENCY SIGN clause

The CURRENCY SIGN clause affects numeric-edited data items whose PICTURE character-strings contain a *currency symbol*.

A currency symbol represents a *currency sign value* that is:

- Inserted in such data items when they are used as receiving items
- Removed from such data items when they are used as sending items for a numeric or numeric-edited receiver

Typically, currency sign values identify the monetary units stored in a data item. For example: '$', 'EUR', 'CHF', 'JPY', 'HK$', 'HKD', or X'9F' (hexadecimal code point in some EBCDIC code pages for €, the Euro currency sign). For details on programming techniques for handling the Euro, see *Using currency signs* in the *COBOL for Linux on x86 Programming Guide*.

The CURRENCY SIGN clause specifies a currency sign value and the currency symbol used to represent that currency sign value in a PICTURE clause.

The SPECIAL-NAMES paragraph can contain multiple CURRENCY SIGN clauses. Each CURRENCY SIGN clause must specify a different currency symbol. Unlike all other PICTURE clause symbols, currency symbols are case sensitive. For example, 'D' and 'd' specify different currency symbols.

CURRENCY SIGN IS *literal-6*
literal-6 must be an alphanumeric literal. *literal-6* must not be a figurative constant or a null-terminated literal. *literal-6* must not contain a multibyte character.

If the PICTURE SYMBOL phrase is not specified, *literal-6*:

- Specifies both a currency sign value and the currency symbol for this currency sign value
- Must be a single character
- Must not contain any of the following digits or characters:
  - Digits 0 through 9
  - Alphabetic characters A, B, C, D, E, G, N, P, R, S, V, X, Z, their lowercase equivalents, or the space
  - Special characters + - , . * / ; ( ) " = ' (plus sign, minus sign, comma, period, asterisk, slash, semicolon, left parenthesis, right parenthesis, quotation mark, equal sign, apostrophe)
- Can be one of the following lowercase alphabetic characters: f, h, i, j, k, l, m, o, q, t, u, w, y

If the PICTURE SYMBOL phrase is specified, *literal-6*:

- Specifies a currency sign value. *literal-7* in the PICTURE SYMBOL phrase specifies the currency symbol for this currency sign value.
- Can consist of one or more characters.
- Must not contain any of the following digits or characters:

– Digits 0 through 9
– Special characters + - . ,

PICTURE SYMBOL *literal-7*

Specifies a currency symbol that can be used in a PICTURE clause to represent the currency sign value specified by *literal-6*.

literal-7 must be an alphanumeric literal consisting of one single-byte character. *literal-7* must not contain any of the following digits or characters:

- A figurative constant
- Digits 0 through 9
- Alphabetic characters A, B, C, D, E, G, N, P, R, S, V, X, Z, their lowercase equivalents, or the space
- Special characters + - , . * / ; ( ) " = '

If the CURRENCY SIGN clause is specified, the CURRENCY and NOCURRENCY compiler options are ignored. If the CURRENCY SIGN clause is not specified and the NOCURRENCY compiler option is in effect, the dollar sign ($) is used as the default currency sign value and currency symbol. For more information about the CURRENCY and NOCURRENCY compiler options, see *CURRENCY* in the *COBOL for Linux on x86 Programming Guide*.

DECIMAL-POINT IS COMMA clause

The DECIMAL-POINT IS COMMA clause exchanges the functions of the period and the comma in PICTURE character-strings and in numeric literals.

FORMAT clause

The FORMAT clause is used to specify a default format for a DATA DIVISION date or time item. The format clause can also specify the default date or time format for an intrinsic function.

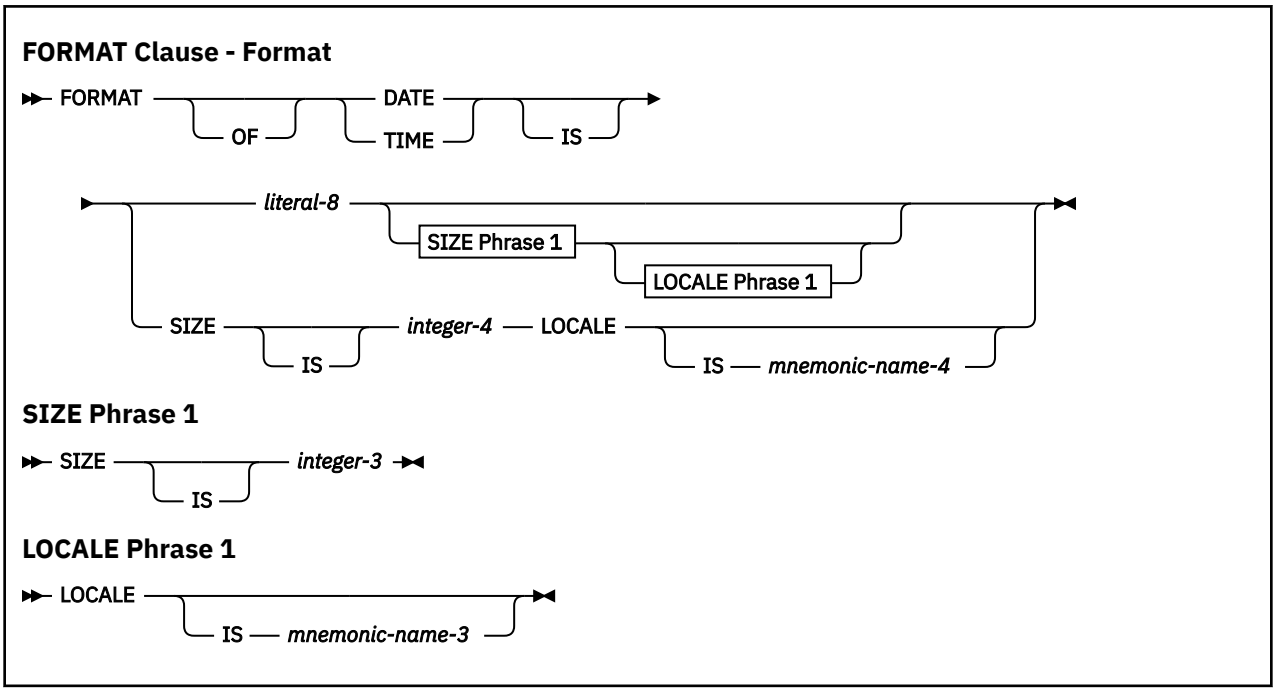

literal-8

Specifies the default format of a date or time item. *literal-8* must be an alphanumeric literal at least 2 characters in length. *literal-8* must contain one or more conversion specifiers and zero or more separators. For more information about the effects of *literal-8* on the LOCALE phrase, refer to "LOCALE

phrase" on page 104. For a list of the conversion specifiers that can be used in *literal-8*, refer to Table 6 on page 103.

The following rules apply:

- When no LOCALE phrase is specified with *literal-8*, the conversion specifications are replaced with values based on the COBOL locale. For more information about the COBOL locale, refer to *COBOL for Linux on x86 Programming Guide*.
- For a date item, *literal-8* must contain a conversion specifier that will result in the day of the year. If *literal-8* contains a year and month conversion specification, but no day conversion specification, the first day of the month is assumed.
- If no FORMAT clause is specified for a date item, the default date item format is ISO.
- If *literal-8* is not specified, the LOCALE phrase must be specified.
- For a time item, *literal-8* must contain an hour and minute conversion specification. If no seconds (or milliseconds) are specified, a value of 0 is assumed.
- If no FORMAT clause is specified for a time item, the default time item format is ISO.

The following table lists the conversion specifiers that can be used in *literal-8*.

Table 6. Conversion specifiers that can be used in literal-8

Specifier	Description	Length	Allowed For
@C	Replaced by the century as an integer [0,9] (0^4 20th century)	1 bytes	D
%d	Replaced by the day of month as an integer [01,31]	2 bytes	D
%D	Same as %m/%d/%y	8 bytes	D
%H	Replaced by the hour (24-hour clock) as an integer [00,23]	2 bytes	T
%I	Replaced by the hour (12-hour clock) as an integer [01,12]	2 bytes	T
%j	Replaced by the day of the year as an integer [001,366]	3 bytes	D
%m	Replaced by the month as an integer [01,12]	2 bytes	D
%M	Replaced by the minute as an integer [00,59]	2 bytes	T
%p	Replaced by the locale's equivalent of either a.m. or p.m.	locale	T
@p	AM and PM can be any mix of upper and lower case	2 bytes	T
%r	Replaced by the time in a.m. and p.m. notation; in the POSIX locale this is equivalent to %I:%M:%S %p	locale, at least 8 bytes	T
%R	Replaced by the time in 24 hour notation [%H:%M]	5 bytes	T
%S	Replaced by the second as an integer [00,61]	2 bytes	T
@Sh	Replaced by the hundredths of a second as an integer [00,99]	2 bytes	T
@Sm	Replaced by the millionths of a second as an integer [000000,999999]	6 bytes	T
@So	Replaced by the thousandths of a second as an integer [000,999]	3 bytes	T
@Sp	Replaced by the trillionths of a second as an integer [000000000000, 999999999999]	12 bytes	T
@St	Replaced by the tenths of a second as an integer [0,9]	1 bytes	T
%y	Replaced by the year without century as an integer [00,99]	2 bytes	D

Table 6. Conversion specifiers that can be used in literal-8 (continued)			
Specifier	**Description**	**Length**	**Allowed For**
%Y	Replaced by the year with century as an integer	usually 4 bytes	D
@Y	Replaced by the year with century as an integer	4 bytes	D
%%	Replaced by a %	1 byte	D, T
@@	Replaced by a @	1 byte	D, T

Notes:

1. Conversion specifiers are case-sensitive.
2. The Allowed For column symbols have the following meaning:
   - D - DATE item
   - T - TIME item
3. The Length column is based on the default COBOL locale.
4. By default, a value of zero represents the twentieth century (1900 to 1999).

SIZE phrase

The SIZE phrase specifies the total size of the date or time item in number of digits. The number of digits must be greater than or equal to the size of the format literal. The size of the format literal is determined by replacing the conversion specifiers with their largest value, and doing conversions, if necessary, to the runtime CCSID.

The SIZE phrase must be specified for a date or time item when the length of that item cannot be determined at compile time. The compiler cannot determine the size of a date or time item when:

- Both *literal-8* and the LOCALE phrase are specified, which means the actual length of the date or time item will be partially determined at runtime from the specified locale.
- *literal-8* is specified without a LOCALE phrase, and one of the conversion specifications within *literal-8* may result in a variable length item.
- *literal-8* is *not* specified, which means the actual length of the date or time item will be completely determined at runtime from the specified locale.

integer-3*, *integer-4

integer-3 and *integer-4* specify the size of the default date or time item in number of digits. *integer-3* or *integer-4* must be specified if the size of the date or time item cannot be determined at compile time. For a date and time item, *integer-3* and *integer-4* must be equal to or greater than 4. The maximum size of an item of class date-time is 256, if the item has a USAGE of DISPLAY, or 31 for a USAGE of PACKED-DECIMAL.

LOCALE phrase

The LOCALE phrase is used to specify the culturally specific locale that is to be used for formatting date and time items.

When the LOCALE phrase is specified *without literal-8*, the date or time item's format and separator is completely based on a locale. When the LOCALE phrase is specified *with literal-8*, *literal-8* determines the format of the item, but the value used to replace any conversion specifier that is dependent on a locale for its exact representation (for example, %p) will be based on the locale.

mnemonic-name-3*, *mnemonic-name-4

If *mnemonic-name-3* or *mnemonic-name-4 is* specified, the locale used for the date or time item is the one associated with *mnemonic-name-3* or *mnemonic-name-4* in the SPECIAL-NAMES paragraph. If *mnemonic-name-3* or *mnemonic-name-4 is not* specified, the current locale is used. To determine

the current locale, refer to *CEELOCT: get current local date or time* in the *COBOL for Linux on x86 Programming Guide*.

mnemonic-name-3 and *mnemonic-name-4* must be locale mnemonic names. Locale mnemonic names are specified with the LOCALE clause of the SPECIAL-NAMES paragraph, see "LOCALE clause" on page 105.

LOCALE clause

The LOCALE clause is used to define locale mnemonic names and their equivalent locale object name and library.

LOCALE clause - Format

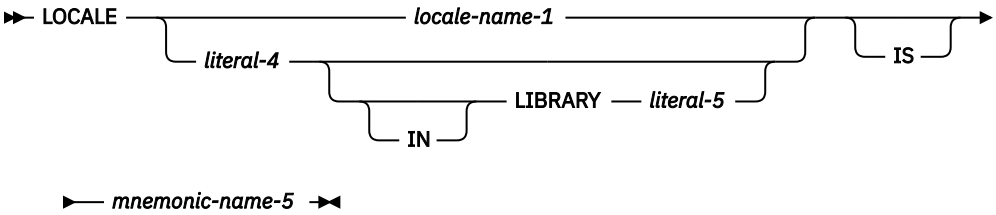

locale-name-1
Specifies a system-specific name that refers to a locale object. For COBOL for Linux, the only supported *locale-name-1* is POSIX.

literal-4
literal-4 must be a locale object name. It must be a nonnumeric literal with a maximum length of 10 characters.

literal-5
literal-5 is used to specify the name of the operating system library in which the locale object is to be found. It must be an nonnumeric literal with a maximum length of 10 characters. If the LIBRARY phrase is omitted , the job's library list is used to search for the locale object.

mnemonic-name-5
mnemonic-name-5 provides a reference to the locale identified by *locale-name-1* or the values specified for *literal-4* and *literal-5*. It can only be used in a FORMAT clause, PICTURE clause, format 9 of the SET statement, or in the argument list of some intrinsic functions.

SYMBOLIC CHARACTERS clause

The SYMBOLIC CHARACTERS clause is applicable only to single-byte character sets. Each character represented is an alphanumeric character.

SYMBOLIC CHARACTERS *symbolic-character-1*
Provides a means of specifying one or more symbolic characters. *symbolic-character-1* is a user-defined word and must contain at least one alphabetic character. The same symbolic-character can appear only once in a SYMBOLIC CHARACTERS clause.

You cannot use the SYMBOLIC CHARACTERS clause if the source text code page is a multibyte code page.

The internal representation of *symbolic-character-1* is the internal representation of the character that is represented in the specified character set. The following rules apply:

- The relationship between each *symbolic-character-1* and the corresponding *integer-1* is by their position in the SYMBOLIC CHARACTERS clause. The first *symbolic-character-1* is paired with the first *integer-1*; the second *symbolic-character-1* is paired with the second *integer-1*; and so forth.
- There must be a one-to-one correspondence between occurrences of *symbolic-character-1* and occurrences of *integer-1* in a SYMBOLIC CHARACTERS clause.

- If the IN phrase is specified, *integer-1* specifies the ordinal position of the character that is represented in the character set named by *alphabet-name-2*. This ordinal position must exist.
- If the IN phrase is not specified, *symbolic-character-1* represents the character whose ordinal position in the native character set is specified by *integer-1*.

  Ordinal positions are numbered starting from 1.

Chapter 15. Input-Output section

The input-output section of the ENVIRONMENT DIVISION contains FILE-CONTROL paragraph and I-O-CONTROL paragraph.

The exact contents of the input-output section depend on the file organization and access methods used. See "ORGANIZATION clause" on page 117 and "ACCESS MODE clause" on page 121.

Format: input-output section

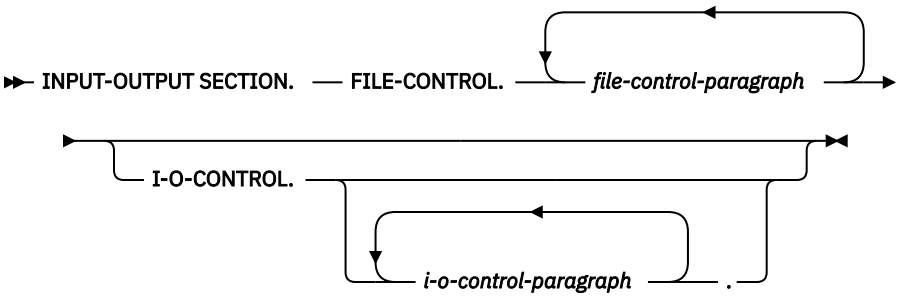

FILE-CONTROL
The keyword FILE-CONTROL identifies the file-control paragraph. This keyword can appear only once, at the beginning of the FILE-CONTROL paragraph. It must begin in Area A and be followed by a separator period.

The keyword FILE-CONTROL and the period can be omitted if no *file-control-paragraph* is specified and there are no files defined in the program.

file-control-paragraph
Names the files and associates them with the external files.

Must begin in Area B with a SELECT clause. It must end with a separator period. See "FILE-CONTROL paragraph" on page 107.

file-control-paragraph can be omitted if there are no files defined in the program, even if the FILE-CONTROL keyword is specified.

I-O-CONTROL
The keyword I-O-CONTROL identifies the I-O-CONTROL paragraph.

i-o-control-paragraph
Specifies information needed for efficient transmission of data between the external file and the COBOL program. The series of entries must end with a separator period. See "I-O-CONTROL paragraph" on page 128.

FILE-CONTROL paragraph

The FILE-CONTROL paragraph associates each file in the COBOL program with an external file, and specifies file organization, access mode, and other information.

The following formats are for the FILE-CONTROL paragraph:

- Sequential file entries
- Indexed file entries
- Relative file entries
- Line-sequential file entries

© Copyright IBM Corp. 2021, 2025

The table below lists the different type of files available to programs.

Table 7. ***Types of files***	
File organization	**File system**
Sequential	SFS, STL, RSD[1], Db2®, QSAM[2], MONGO
Relative	SFS, STL, Db2, MONGO
Indexed	SFS, STL, Db2, MONGO
Line sequential	LSQ

1. The RSD file system supports fixed or variable-length record sequential files.
2. The QSAM file system supports fixed, variable, and spanned records.
3. If you specify the SdU file type, it will be handled as if you specified the STL file.

The FILE-CONTROL paragraph begins with the word FILE-CONTROL followed by a separator period. It must contain one and only one entry for each file described in an FD or SD entry in the DATA DIVISION.

Within each entry, the SELECT clause must appear first. The other clauses can appear in any order.

The underscore is allowed in the *external-file-name* component of *assignment-name-1*.

Format 1: sequential-file-control-entry

```
SELECT ──┬──────────┬── file-name-1 ── ASSIGN ──►
         └─ OPTIONAL ─┘

►──┬──┬──┬──────────────────┬──►
   │  │  │  ┌──────────────┐ │
   │  │  │  ▼              │ │
   │  │  └─ assignment-name-1 ─┘
   │  └─ TO ─┘
   └── USING ── data-name-9 ──┘

►──┬──────────────────────────────────┬──►
   └─ RESERVE ── integer ──┬──────┬──┘
                           ├─ AREA ─┤
                           └─ AREAS ─┘

►──┬──────────────────────────────────────────┬──►
   │                                          │
   └─ ORGANIZATION ──┬──────┬── SEQUENTIAL ──┘
                     └─ IS ─┘

►──┬──────────────────────────────────────────────────────────┬──►
   └─ PADDING ──┬──────────────┬──┬──────┬──┬──────────────┬──┘
                └─ CHARACTER ─┘  └─ IS ─┘  ├── data-name-5 ─┤
                                           └── literal-2 ────┘

►──┬──────────────────────────────────────────────────────────┬──►
   └─ RECORD DELIMITER ──┬──────┬──┬──────────────────────┬──┘
                         └─ IS ─┘  ├── STANDARD-1 ────────┤
                                   └── assignment-name-2 ──┘

►──┬──────────────────────────────────────────────────────────┬──►
   └─ ACCESS ──┬──────────┬──┬──────┬── SEQUENTIAL ──────────┘
               └─ MODE ───┘  └─ IS ─┘

►──┬──────────────────────────────────────────┬──►
   └─ PASSWORD ──┬──────┬── data-name-6 ──────┘
                 └─ IS ─┘

►──┬──────────────────────────────────────────────────────────────────────┬──►
   └──┬──────────┬── STATUS ──┬──────┬── data-name-1 ──┬──────────────┬──┘
      └─ FILE ───┘            └─ IS ─┘                 ├── data-name-8 ─┤
                                                       └────────────────┘

►──┬──────────────────────────────────────────────────────────────────────────────┬── . ──►◄
   │                                                                              │
   └──┬──────────┬── LOCK ── ON ──┬──────────────┬──┬──────────┬──┬─────────┬──┘
      └─ WITH ───┘                └─ MULTIPLE ───┘  ├── RECORD ─┤  └─ RECORD ─┘
                                                    └── RECORDS ─┘
```

Format 2: indexed-file-control-entry

```
SELECT [OPTIONAL] file-name-1 ASSIGN
    [TO] assignment-name-1 [...]
    USING data-name-9
    [RESERVE integer [AREA | AREAS]]
    [ORGANIZATION [IS]
        INDEXED
            [ACCESS [MODE] [IS] SEQUENTIAL | RANDOM | DYNAMIC]
        RECORD [KEY] [IS]
            data-name-2
            record-key-name-1 SOURCE [IS] | = data-name-10 [...]
            [PASSWORD [IS] data-name-6]
            [entry 1 ...]
            [FILE] STATUS [IS] data-name-1 | data-name-8
            [WITH] LOCK ON [MULTIPLE] RECORD | RECORDS
    .
```

entry 1

```
ALTERNATE [RECORD] [KEY] [IS]
    data-name-3
    record-key-name-2 SOURCE [IS] | = data-name-11 [...]
    [WITH] DUPLICATES
    [PASSWORD [IS] data-name-7]
```

Restriction: *record-key-name* is supported for STL file system only.

Format 3: relative-file-control-entry

```
SELECT [OPTIONAL] file-name-1 ASSIGN
  [TO] assignment-name-1 [...]
  USING data-name-9
  [RESERVE integer [AREA | AREAS]]
  [ORGANIZATION [IS]]
  RELATIVE
  [ACCESS [MODE] [IS] SEQUENTIAL [RELATIVE [KEY] [IS] data-name-4]
          [RANDOM | DYNAMIC] RELATIVE [KEY] [IS] data-name-4]
  [PASSWORD [IS] data-name-6]
  [FILE] STATUS [IS] data-name-1 [data-name-8]
  [WITH] LOCK ON [MULTIPLE] RECORD [RECORDS]
  .
```

Format 4: line-sequential-file-control-entry

```
SELECT [OPTIONAL] file-name-1 ASSIGN
  [TO] assignment-name-1 [...]
  USING data-name-9
  [ORGANIZATION [IS]]
  LINE SEQUENTIAL
  [ACCESS [MODE] [IS] SEQUENTIAL]
  [FILE] STATUS [IS] data-name-1 [data-name-8]
  .
```

SELECT clause

The SELECT clause identifies a file in the COBOL program to be associated with an external file.

SELECT OPTIONAL
Can be specified only for files opened in the input, I-O, or extend mode. You must specify SELECT OPTIONAL for those input files that are not necessarily available each time the object program is executed. For more information, see "OPEN statement notes" on page 340.

file-name-1
Must be identified by an FD or SD entry in the DATA DIVISION. A file-name must conform to the rules for a COBOL user-defined name, must contain at least one alphabetic character, and must be unique within this program.

When *file-name-1* specifies a sort or a merge file, only the ASSIGN clause can follow the SELECT clause.

If the file connector referenced by *file-name-1* is an external file connector, all file-control entries in the run unit that reference this file connector must have the same specification for the OPTIONAL phrase.

ASSIGN clause

The ASSIGN clause associates an internal file-name in a COBOL program with a system file-name.

assignment-name-1

Can be specified either as a user-defined word or as an alphanumeric literal. Both forms consist of up to three components, separated by hyphens. From left to right:

1. An optional comment string
2. An optional file-system ID
3. A required external file-name if *assignment-name-1* was specified as a user-defined word; a required system file-name if *assignment-name-1* was specified as a literal

For further details about how the external file-name component of *assignment-name-1* is determined, see "Assignment name for user-defined words and literals" on page 113.

User-defined word
assignment-name-1 must follow the rules for a COBOL word, and can be up to 30 single-byte characters in length. The user-defined word cannot be the same as a reserved word, but can be the same as any other user-defined word in the program, including the name of a data item. The external file-name component is treated at run time initially as the name of an environment variable; then, if the environment variable is not set, or is set to the empty string, the component is treated directly as the system file-name:

- **External file-name:** Each time a COBOL file is opened, the external file-name is used as the name of an environment variable. If the environment variable is set to a nonempty value, the value is treated as the system file-name, or as the system file-name preceded by a file-system ID. For details, see "Assignment name for data-names and environment variables" on page 115. If a file-system ID is specified in the user-defined word and also in the environment variable, the environment variable takes precedence. For more information about file-system precedence, see *Precedence of file-system determination* in the *COBOL for Linux on x86 Programming Guide*.
- **System file-name:** If the environment variable indicated by the external file-name is not set, the user-defined word is treated as either:
  - The system file-name
  - The system file-name preceded by a file-system ID
  - The system file-name preceded by a file-system ID preceded by a comment

  For details, see "Assignment name for user-defined words and literals" on page 113.

Literal
assignment-name-1 must follow the rules for a COBOL alphanumeric literal. All characters specified within the literal delimiters are used without any mapping. No check is made at run time for the existence of an environment variable. For details, see "Assignment name for user-defined words and literals" on page 113.

USING *data-name-9*
Must be defined in the working-storage section as a data item of category alphanumeric, and must not be subordinate to the file description for *file-name-1*. The content of *data-name-9* is evaluated each time the file is opened to determine the assignment information. As for an environment variable value, the assignment information is treated as the system file-name, or as the system file-name preceded by a file-system ID. For details, see "Assignment name for data-names and environment variables" on page 115.

Assignment name for user-defined words and literals

If USING is not specified, the user-defined word or literal that is specified for the assignment name is processed as described below.

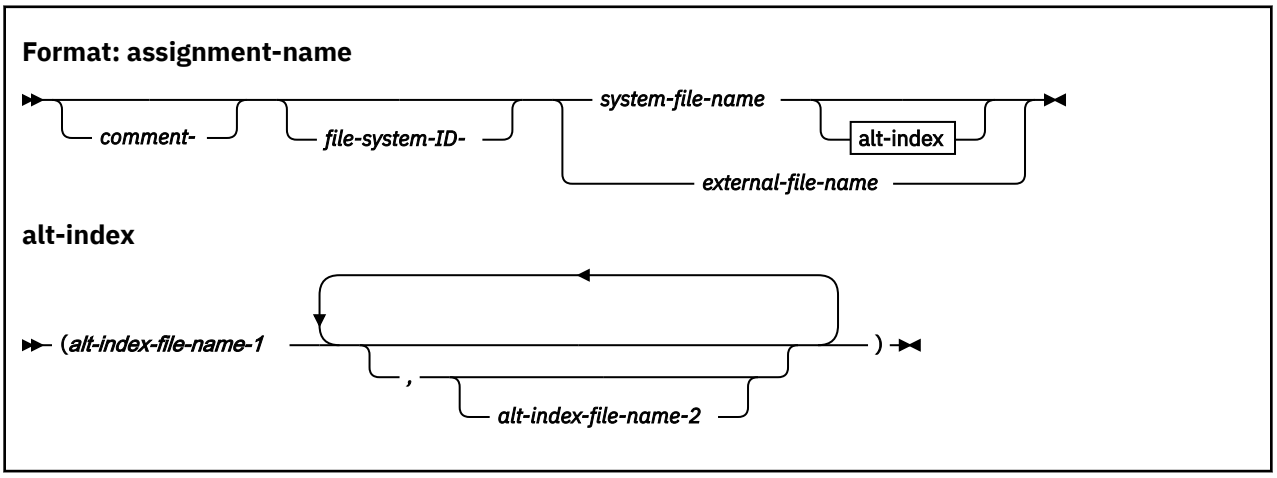

If the user-defined word does not contain any hyphens, the entire string is treated as the external file-name. If the literal does not contain any hyphens, the entire string is treated as *file name information*. File name information can be a single system file-name, or a single system file-name followed by a list of alternate index file-names, or a concatenation of system file-names that are separated by colons. For each of these alternatives, each system file-name can be qualified by a path name. Otherwise, the user-defined word or literal is partitioned into up to three components separated by hyphens:

comment
Characters to the left of the file-system ID if specified, or characters to the left of the external file-name or system file-name if there is no valid file-system ID are interpreted as a comment.

file-system-ID

A three-character string that specifies the file system in which a file is stored and through which it is accessed.

If the next-to-rightmost component meets all the following criteria, the first three characters of the string, folded to uppercase, are interpreted as the file-system ID:

- The string consists of three or more characters.
- The first (leftmost) three characters are alphanumeric (A-Z, a-z, or 0-9).
- The first character is alphabetic (A-Z or a-z).

If the string does not meet all of these criteria, it is treated as part of the comment.

***external-file-name* or file name information**
The rightmost component is the external file-name or one of the three forms of file name information.

Because the hyphen is used as the separator, an external file-name or system file-name that contains one or more hyphens cannot be specified directly with a user-defined word or a literal. To specify an external file-name or system file-name that contains one or more hyphens, use either of the following approaches:

- Set the environment variable indicated by the external file-name to an appropriate value at run time.
- Specify the USING *data-name-9* form of the ASSIGN clause, and move an appropriate value to *data-name-9* before opening the file.

If *assignment-name-1* is specified as a user-defined word, *external-file-name* is interpreted at run time as the name of an environment variable set to a nonempty value or, if there is no such environment variable, directly as the system file-name.

If *assignment-name-1* is specified as a literal, the rightmost component is always interpreted as file name information directly.

Examples:

Table 8. ***Assignment name for user-defined words***

User-defined word	Comment	File-system ID	External file-name
`Read-Only-STL-Orders`	`Read-Only`	`STL`	`ORDERS`
`This-is-my-file`	`This-is-my`	VSAM (Default = STL)	`FILE`
`Comment-STL--file`	`Comment-STL-`	VSAM (Default = STL)	`FILE`
`Watch-for-this-file`	`Watch-for`	`THI` (invalid)	`FILE`

Table 9. ***Assignment name for literals***

Literal	Comment	File-system ID	System file-name
`Read-Only-STL-Orders`	`Read-Only`	`STL`	`Orders`
`Eh?-What's this?`	`Eh?`	VSAM (Default = STL)	`What's this?`
`This-is-a-Db2-CICS.FILE`	`This-is-a`	`Db2`	`FILE` (under schema `CICS`)
`I-Like-STL!-`	`I-Like`	`STL`	(Null)
`vsa-/.:/cics/sfs/svr/W123`	(None)	SFS	`W123` (on SFS server `svr`)

Specifying alternate indexes: The compiler normally assigns appropriate alternate index file-names; however, you must provide alternate index file-names for:

- Indexed SFS files that have alternate indexes. Each index file-name is of this form:

```
/.:/cics/sfs/sfsServer/base-file-name;index-file-name
```

- Indexed SdU files that have alternate index files with names other than the COBOL compiler defaults. For example, a file that is created through a different language, such as PL/I.

Alternate index file-names, if specified, must be specified in the same order as the alternate record keys are specified in the source program. You can omit alternate index file-names, but any other alternate index file-names must correspond to the position in the file definition. The following example shows how to specify the first and third alternate index file-names:

```
base-file-name(first-index-file-name,,third-index-file-name)
```

In this example, the compiler assigns a default file-name for the second alternate index file.

Alternate index file-names are ignored for file systems other than SdU or SFS.

Assignment name for data-names and environment variables

If an environment variable or data-name is specified for the assignment name, the value of the data-name or the environment variable is processed as described below.

Format: environment variable and data-name values

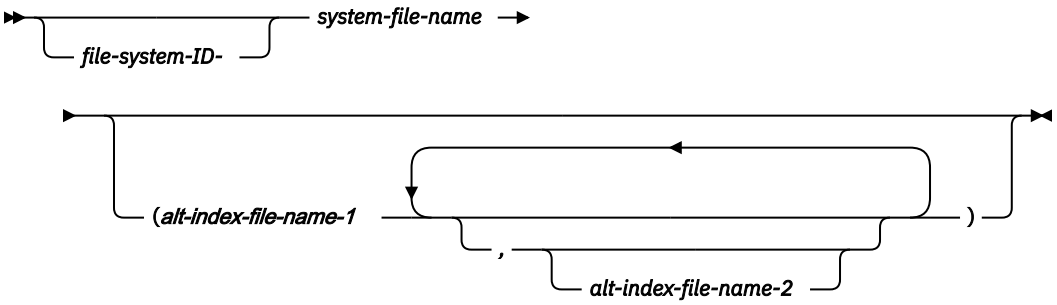

The value in *data-name-9* or the environment variable is evaluated each time that an OPEN statement for the corresponding COBOL file is executed. If the value does not contain any hyphens, the entire string is treated as *file name information*. File name information can be a single system file-name, or a single system file-name followed by a list of alternate index file-names, or a concatenation of system file-names that are separated by colons. For each of these alternatives, each system file-name can be qualified by a path name. If the value contains one or more hyphens with at least one character after the leftmost hyphen, and the string to the left of the leftmost hyphen meets all the following criteria, the value is interpreted as *file-system-ID*, followed by file name information:

- The string consists of three or more characters.
- The first (leftmost) three characters are alphanumeric (A-Z, a-z, or 0-9).
- The first character is alphabetic (A-Z or a-z).

file-system-ID
The first three characters of *file-system-ID*, folded to uppercase, are interpreted as the file-system ID, subject to validation at run time. The value of a file-system ID that is specified at run time overrides any file-system ID that is specified in the user-defined word of *assignment-name-1*.

file name information
One of the three forms of file name information. For information about specifying alternate indexes, see "Specifying alternate indexes" under “Assignment name for user-defined words and literals” on page 113.

The examples in the following table assume that runtime option FILESYS has been set to STL, and thus the file-system ID defaults to STL.

Table 10. ***Assignment name for data-names and environment variables***

Environment variable value or data-name value	File-system ID	System file-name
`my-fyle`	STL	`my-fyle`
`abc/my-fyle`	ABC (invalid)	`fyle`
`payroll-fyle`	PAY (invalid)	`fyle`
`rsd-payroll-file`	RSD	`payroll-file`
`\\Strange (...) name!`	STL	`\Strange (...) name!`
`Db2-File1`	Db2	`File1`

Table 10. ***Assignment name for data-names and environment variables*** *(continued)*		
Environment variable value or data-name value	**File-system ID**	**System file-name**
`./Db2-File2`	STL	`./Db2-File2`
`sfs-/.:/cics/sfs/svr/F1`	SFS	F1 (on SFS server `svr`)
`STL-/.:/cics/sfs/svr/F1`	SFS	(Invalid path)
`stl-file1:file2`	STL	`file1` and `file2` (concatenated)

For more information about identifying files, see *Identifying files* in the *COBOL for Linux on x86 Programming Guide*.

For more information about file concept and terminology, see *File concepts and terminology* in the *COBOL for Linux on x86 Programming Guide*.

File concatenation

COBOL for Linux supports assignment of a concatenation of files to an internal file (*file-name-1* in the SELECT clause). The file concatenation is specified by multiple file identifiers that are separated by colons (:).

Format: concatenated file identifier

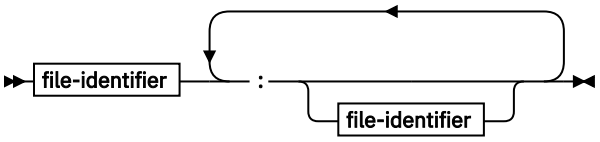

file-identifier

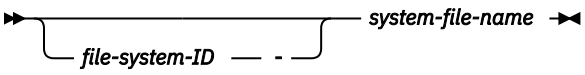

file-system-ID
The file system in which *system-file-name* exists if *file-system-ID* consists of at least three alphanumeric characters, and the first character is alphabetic. Otherwise, the entire file identifier is interpreted as the name of the file in the default file system.

system-file-name
The name of the file in the specified file system if *file-system-ID* is specified; otherwise, the entire file identifier is interpreted as the name of the file in the default file system. *system-file-name* can include the drive and path information for the file.

For example:

```
export MYFILE='STL-/home/user1/file1:STL-/home/user1/file2'
```

In this example, `MYFILE` is the result of the file concatenation of `/home/user1/file1` and `/home/user1/file2`, both in the STL file system.

A file identifier cannot contain a colon (:) because the file identifier would then be interpreted as a concatenation of two separate files.

Up to 256 file identifiers can be specified in a concatenation. File identifiers need not be unique. For example, a concatenation can consist of 256 occurrences of the same file identifier. Adjacent colons are treated as a single colon.

File concatenation is supported for the environment variable value, the ASSIGN USING data item content, and the literal form of the assignment name.

A COBOL internal file assigned to a concatenation of files must meet the following criteria:

- FILE ORGANIZATION is SEQUENTIAL or LINE SEQUENTIAL.
- ACCESS MODE is SEQUENTIAL.
- The mode of any OPEN statements is INPUT.

These criteria are checked at run time, even if the concatenation is specified in the literal form of the assignment name.

If a colon precedes or follows a single file identifier, the file becomes a member of a trivial concatenation, and is read-only in any programs that use the file, regardless of its file permissions.

Concatenation is supported for all file systems. The file-system ID can be specified on any or all of the file identifiers in a given concatenation. However, all file identifiers in a concatenation must specify or default to the same file system at run time, and the files must have consistent attributes.

A concatenation can include individual generation files or entire generation data groups (GDGs). If a GDG is specified as a member of a concatenation, the individual files in the group are read in generation order, that is, from the most current generation to the oldest generation. For more information about generation data groups or generation files, see *Generation data groups* in the *COBOL for Linux on x86 Programming Guide*.

A concatenation can also include empty files, that is, files that contain no records. When empty files are read, they immediately return end-of-file internally, and are thus invisible to the program that reads the concatenated files. If the concatenation contains only empty files, the first READ operation returns end-of-file, and the AT END condition exists.

If a COBOL file is defined with the OPTIONAL phrase in a SELECT clause, the concatenation can include unavailable files. A file is *unavailable* if it does not exist or the file permissions do not allow the requested operation. An unavailable file is treated like an empty file, thus is invisible to the program.

For more information about file availability, see Table 52 on page 340.

For more information about concatenating files, see *Concatenating files* in the *COBOL for Linux on x86 Programming Guide*.

RESERVE clause

The RESERVE clause is syntax checked, but has no effect on the execution of the program.

ORGANIZATION clause

The ORGANIZATION clause identifies the logical structure of the file. The logical structure is established at the time the file is created and cannot subsequently be changed.

You can find a discussion of the different ways in which data can be organized and of the different access methods that you can use to retrieve the data under “File organization and access modes” on page 122.

ORGANIZATION IS SEQUENTIAL (format 1)
A predecessor-successor relationship among the records in the file is established by the order in which records are placed in the file when it is created or extended.

ORGANIZATION IS INDEXED (format 2)
The position of each logical record in the file is determined by indexes created with the file and maintained by the system. The indexes are based on embedded keys within the file's records.

ORGANIZATION IS RELATIVE (format 3)
The position of each logical record in the file is determined by its relative record number.

ORGANIZATION IS LINE SEQUENTIAL (format 4)
A predecessor-successor relationship among the records in the file is established by the order in which records are placed in the file when it is created or extended. A record in a LINE SEQUENTIAL file can consist only of printable characters.

If you omit the ORGANIZATION clause, the compiler assumes ORGANIZATION IS SEQUENTIAL.

If the file connector referenced by *file-name-1* in the SELECT clause is an external file connector, the same organization must be specified for all file-control entries in the run unit that reference this file connector.

File organization

You establish the organization of the data when you create a file. Once the file has been created, you can expand the file, but you cannot change the organization.

Sequential organization

The physical order in which the records are placed in the file determines the sequence of records. The relationships among records in the file do not change, except that the file can be extended. Records can be fixed length or variable length; there are no keys.

Each record in the file except the first has a unique predecessor record; and each record except the last has a unique successor record.

Indexed organization

Each record in the file has one or more embedded keys (referred to as *key data items*); each key is associated with an index. An index provides a logical path to the data records according to the contents of the associated embedded record key data items. Indexed files must be direct-access storage files. Records can be fixed length or variable length.

Each record in an indexed file must have an embedded prime key data item. When records are inserted, updated, or deleted, they are identified solely by the values of their prime keys. Thus, the value in each prime key data item must be unique and must not be changed when the record is updated. You tell COBOL the name of the prime key data item in the RECORD KEY clause of the file-control paragraph.

In addition, each record in an indexed file can contain one or more embedded alternate key data items. Each alternate key provides another means of identifying which record to retrieve. You tell COBOL the name of any alternate key data items on the ALTERNATE RECORD KEY clause of the file-control paragraph.

The key used for any specific input-output request is known as the *key of reference*.

Relative organization

Think® of the file as a string of record areas, each of which contains a single record. Each record area is identified by a relative record number; the access method stores and retrieves a record based on its relative record number. For example, the first record area is addressed by relative record number 1 and the 10th is addressed by relative record number 10. The physical sequence in which the records were placed in the file has no bearing on the record area in which they are stored, and thus no effect on each record's relative record number. Relative files must be direct-access files. Records can be fixed length or variable length.

Line-sequential organization

In a line-sequential file, each record contains a sequence of characters that ends with a record delimiter. The delimiter is not counted in the length of the record.

When a record is written, any trailing blanks are removed prior to adding the record delimiter. The characters in the record area from the first character up to and including the added record delimiter constitute one record and are written to the file.

When a record is read, characters are read one at a time into the record area until:

- The first record delimiter is encountered. The record delimiter is discarded and the remainder of the record is filled with spaces.
- The entire record area is filled with characters. If the first unread character is the record delimiter, it is discarded. Otherwise, the first unread character becomes the first character read by the next READ statement.
- End-of-file is encountered. The remainder of the record area is filled with spaces.

The record length is determined by one of the following:

- The requested read length
- The location of the new-line character (*n*)

The only special character in a line sequential file is the new-line character (*n*). Any other character including NULL (0x00) is valid and will not cause read or write errors.

Records written to line-sequential files must consist of data items described as USAGE DISPLAY or DISPLAY-1 or a combination of DISPLAY and DISPLAY-1 items. If the CHAR(EBCDIC) compiler option is in effect, a DISPLAY or DISPLAY-1 item can be encoded in either ASCII or EBCDIC, depending on the presence or absence of the NATIVE phrase in the USAGE clause of the data item. A zoned decimal data item either must be unsigned or, if signed, must be declared with the SEPARATE CHARACTER phrase.

A line-sequential file can contain printable characters and control characters. Be aware though that if your file contains a line-feed character (X'0A'), the line-feed character will function as a record delimiter.

The following clauses are not supported for line-sequential files:

- APPLY WRITE-ONLY clause
- CODE-SET clause
- DATA RECORDS clause
- LABEL RECORDS clause
- LINAGE clause
- I-O phrase of the OPEN statement
- PADDING CHARACTER clause
- RECORD CONTAINS 0 clause
- RECORD CONTAINS clause format 2 (for example: RECORD CONTAINS 100 to 200 CHARACTERS)
- RECORD DELIMITER clause
- RECORDING MODE clause
- RERUN clause
- RESERVE clause
- REVERSED phrase of the OPEN statement
- REWRITE statement
- VALUE OF clause of file description entry
- WRITE ... AFTER ADVANCING *mnemonic-name*
- WRITE ... AT END-OF-PAGE
- WRITE ... BEFORE ADVANCING

Language elements treated as comments

For other files (sequential, relative, and indexed), the following language elements are syntax checked, but have no effect on the execution of the program:

- APPLY WRITE-ONLY clause
- CLOSE ... FOR REMOVAL
- CLOSE ... WITH NO REWIND
- CODE-SET clause
- DATA RECORDS clause
- LABEL RECORDS clause
- MULTIPLE FILE TAPE clause
- OPEN ... REVERSE
- PADDING CHARACTER clause
- PASSWORD clause
- RECORD CONTAINS 0 clause
- RECORD DELIMITER clause
- RECORDING MODE clause (for relative and indexed files)
- RERUN clause
- RESERVE clause
- SAME AREA clause
- SAME SORT AREA clause
- SAME SORT-MERGE AREA clause
- VALUE OF clause of file description entry

No error messages are generated (with the exception of the data name option for the LABEL RECORDS, USE ... AFTER ... LABEL PROCEDURE, and GO TO MORE-LABELS clauses).

PADDING CHARACTER clause

The PADDING CHARACTER clause specifies a character to be used for block padding on sequential files.

data-name-5
Must be defined in the DATA DIVISION as a one-character data item of category alphabetic, alphanumeric, or national, and must not be defined in the FILE SECTION. *data-name-5* can be qualified.

literal-2
Must be a one-character alphanumeric literal or national literal.

For external files, *data-name-5*, if specified, must reference an external data item.

The PADDING CHARACTER clause is syntax checked, but has no effect on the execution of the program.

RECORD DELIMITER clause

The RECORD DELIMITER clause indicates the method of determining the length of a variable-length record on an external medium. It can be specified only for variable-length records.

STANDARD-1
If STANDARD-1 is specified, the external medium must be a magnetic tape file.

assignment-name-2
Can be any COBOL word.

The RECORD DELIMITER clause is syntax checked, but has no effect on the execution of the program.

ACCESS MODE clause

The ACCESS MODE clause defines the manner in which the records of the file are made available for processing. If the ACCESS MODE clause is not specified, sequential access is assumed.

For sequentially accessed relative files, the ACCESS MODE clause does not have to precede the RELATIVE KEY clause.

ACCESS MODE IS SEQUENTIAL

Can be specified in all formats.

Format 1: sequential

Records in the file are accessed in the sequence established when the file is created or extended. Format 1 supports only sequential access.

Format 2: indexed

Records in the file are accessed in the sequence of ascending record key values according to the collating sequence of the file.

Format 3: relative

Records in the file are accessed in the ascending sequence of relative record numbers of existing records in the file.

Format 4: line-sequential

Records in the file are accessed in the sequence established when the file is created or extended. Format 4 supports only sequential access.

The following is the syntax of the sequential access mode:

```
ENVIRONMENT DIVISION.
INPUT-OUTPUT SECTION.
FILE-CONTROL.
   SELECT file-name ASSIGN TO dd-name
   ORGANIZATION IS SEQUENTIAL
   ACCESS MODE IS SEQUENTIAL


ENVIRONMENT DIVISION.
INPUT-OUTPUT SECTION.
   FILE-CONTROL.
   SELECT file-name ASSIGN TO dd-name
   ORGANIZATION IS INDEXED
   ACCESS MODE IS SEQUENTIAL
   RECORD KEY IS rec-key1
   ALTERNATE RECORD KEY IS rec-key2


ENVIRONMENT DIVISION.
INPUT-OUTPUT SECTION.
   FILE-CONTROL.
   SELECT file-name ASSIGN TO dd-name
   ORGANIZATION IS RELATIVE
   ACCESS MODE IS SEQUENTIAL
   RELATIVE KEY IS rec-key1
```

ACCESS MODE IS RANDOM

Can be specified in formats 2 and 3 only.

Format 2: indexed

The value placed in a record key data item specifies the record to be accessed.

Format 3: relative

The value placed in a relative key data item specifies the record to be accessed.

The following is the syntax of the random access mode:

```
ENVIRONMENT DIVISION.
INPUT-OUTPUT SECTION.
   FILE-CONTROL.
   SELECT file-name ASSIGN TO dd-name
   ORGANIZATION IS INDEXED
   ACCESS MODE IS RANDOM
   RECORD KEY IS rec-key1
```

```
   ALTERNATE RECORD KEY IS rec-key2


ENVIRONMENT DIVISION.
INPUT-OUTPUT SECTION.
   FILE-CONTROL.
   SELECT file-name ASSIGN TO dd-name
   ORGANIZATION IS RELATIVE
   ACCESS MODE IS RANDOM
   RELATIVE KEY IS rec-key1
```

ACCESS MODE IS DYNAMIC

Can be specified in formats 2 and 3 only.

Format 2: indexed

Records in the file can be accessed sequentially or randomly, depending on the form of the specific input-output statement used.

Format 3: relative

Records in the file can be accessed sequentially or randomly, depending on the form of the specific input-output request.

The following is the syntax of the dynamic access mode:

```
ENVIRONMENT DIVISION.
INPUT-OUTPUT SECTION.
   FILE-CONTROL.
   SELECT file-name ASSIGN TO dd-name
   ORGANIZATION IS SEQUENTIAL
   ACCESS MODE IS DYNAMIC
   RECORD KEY IS rec-key1
   ALTERNATE RECORD KEY IS rec-key2


ENVIRONMENT DIVISION.
INPUT-OUTPUT SECTION.
   FILE-CONTROL.
   SELECT file-name ASSIGN TO dd-name
   ORGANIZATION IS RELATIVE
   ACCESS MODE IS DYNAMIC
   RELATIVE KEY IS rec-key1
```

File organization and access modes

File organization is the permanent logical structure of the file. You tell the computer how to retrieve records from the file by specifying the *access mode* (sequential, random, or dynamic).

For details on the access methods and data organization, see Table 7 on page 108.

Sequentially organized data can be accessed only sequentially; however, data that has indexed or relative organization can be accessed in any of the three access modes.

Access modes

See the descriptions of the following types of access modes.

Sequential-access mode

Allows reading and writing records of a file in a serial manner; the order of reference is implicitly determined by the position of a record in the file.

Random-access mode

Allows reading and writing records in a programmer-specified manner; the control of successive references to the file is expressed by specifically defined keys supplied by the user.

Dynamic-access mode

Allows the specific input-output statement to determine the access mode. Therefore, records can be processed sequentially or randomly or both.

For external files, every file-control entry in the run unit that is associated with that external file must specify the same access mode. In addition, for relative file entries, *data-name-4* must reference an

external data item, and the RELATIVE KEY phrase in each associated file-control entry must reference that same external data item.

Relationship between data organizations and access modes

This section discusses which access modes are valid for each type of data organization.

Sequential files
Files with sequential organization can be accessed only sequentially. The sequence in which records are accessed is the order in which the records were originally written.

Line-sequential files
Same as for sequential files (described above).

Indexed files
All three access modes are allowed.

In the sequential access mode, the sequence in which records are accessed is the ascending order (or, optionally, descending order) of the record key value. The order of retrieval within a set of records that have duplicate alternate record key values is the order in which records were written into the set.

In the random access mode, you control the sequence in which records are accessed. A specific record is accessed by placing the value of its key or keys in the RECORD KEY data item (and the ALTERNATE RECORD KEY data item). If a set of records has duplicate alternate record key values, only the first record written is available.

In the dynamic access mode, you can change as needed from sequential access to random access by using appropriate forms of input-output statements.

Relative files
All three access modes are allowed.

In the sequential access mode, the sequence in which records are accessed is the ascending order (or, optionally, descending order) of the relative record numbers of all records that exist within the file.

In the random access mode, you control the sequence in which records are accessed. A specific record is accessed by placing its relative record number in the RELATIVE KEY data item; the RELATIVE KEY must not be defined within the record description entry for the file.

In the dynamic access mode, you can change as needed from sequential access to random access by using appropriate forms of input-output statements.

RECORD KEY clause

The RECORD KEY clause (format 2) specifies the data item within the record that is the prime RECORD KEY for an indexed file. The values contained in the prime RECORD KEY data item must be unique among records in the file.

data-name-2
The prime RECORD KEY data item.

data-name-2 must be described within a record description entry associated with the file. The key can have any of the following data categories:

- Alphanumeric
- Numeric
- Numeric-edited (with usage DISPLAY or NATIONAL)
- Alphanumeric-edited
- Alphabetic
- External floating-point (with usage DISPLAY or NATIONAL)
- Internal floating-point
- DBCS

- National
- National-edited

Regardless of the category of the key data item, the key is treated as an alphanumeric item. The collation order of the key is determined by the item's binary value order when the key is used for locating a record or for setting the file position indicator associated with the file.

data-name-2 cannot be a windowed date field.

data-name-2 must not reference a variable-length data item. *data-name-2* can be qualified.

If the indexed file contains variable-length records, *data-name-2* need not be contained within the minimum record size specified for the file. That is, *data-name-2* can exceed the minimum record size, but this is not recommended.*data-name-2* shall be contained within the first *n* bytes of the record, where *n* equals the minimum record size specified for the file. *data-name-2* can exceed the minimum record size, but this is not recommended. For more information, see "RECORD clause" on page 156.

The data description of *data-name-2* and its relative location within the record must be the same as those used when the file was defined.

If the file has more than one record description entry, *data-name-2* need be described in only one of those record description entries. The identical character positions referenced by *data-name-2* in any one record description entry are implicitly referenced as keys for all other record description entries for that file.

For files defined with the EXTERNAL clause, all file description entries in the run unit that are associated with the file must have data description entries for *data-name-2* that specify the same relative location in the record and the same length.

record-key-name-1

record-key-name-1 has the class and category of *data-name-10*.

Restriction: *record-key-name* is supported for STL file system only.

data-name-10

data-name-10 must be described within a record description entry associated with the file. The key can have any of the following data categories:

- Alphanumeric
- Numeric
- Numeric-edited (with usage DISPLAY or NATIONAL)
- Alphanumeric-edited
- Alphabetic
- External floating-point (with usage DISPLAY or NATIONAL)
- Internal floating-point
- DBCS
- National
- National-edited

Regardless of the category of the key data item, the key is treated as an alphanumeric item. The collation order of the key is determined by the item's binary value order when the key is used for locating a record or for setting the file position indicator associated with the file.

All occurrences of *data-name-10* must be of the same category.

data-name-10 cannot be a windowed date field.

data-name-10 must not reference a variable-length data item. *data-name-10* can be qualified.

If the indexed file contains variable-length records, *data-name-10* must be contained within the first *n* bytes of the record, where *n* equals the minimum record size specified for the file. For more information, see "RECORD clause" on page 156.

If the file connector referenced by *file-name-1* in the SELECT clause is an external file connector, all file-control entries in the run unit that reference this file connector must have the same data description entry for *data-name-2* and each *data-name-10* as well as their relative location within the associated record. For details about external file connector, see "EXTERNAL clause" on page 170.

ALTERNATE RECORD KEY clause

The ALTERNATE RECORD KEY clause (format 2) specifies a data item within the record that provides an alternative path to the data in an indexed file.

data-name-3

An ALTERNATE RECORD KEY data item.

data-name-3 must be described within a record description entry associated with the file. The key can have any of the following data categories:

- Alphanumeric
- Numeric
- Numeric-edited (with usage DISPLAY or NATIONAL)
- Alphanumeric-edited
- Alphabetic
- External floating-point (with usage DISPLAY or NATIONAL)
- Internal floating-point
- DBCS
- National
- National-edited

Regardless of the category of the key data item, the key is treated as an alphanumeric item. The collation order of the key is determined by the item's binary value order when the key is used for locating a record or for setting the file position indicator associated with the file.

data-name-3 cannot be a windowed date field.

data-name-3 must not reference a group item that contains a variable-occurrence data item. *data-name-3* can be qualified.

data-name-3 must not reference the following data items:

- A variable-length data item.
- An item whose leftmost byte position corresponds to the leftmost byte position of the prime record key, or of another alternate record key. This restriction does not apply if either key is specified by using the SOURCE phrase.

If the indexed file contains variable-length records, *data-name-3* need not be contained within the minimum record size specified for the file. That is, *data-name-3* can exceed the minimum record size, but this is not recommended.

If the indexed file contains variable-length records, *data-name-3* need not be contained within the minimum record size specified for the file. That is, *data-name-3* can exceed the minimum record size, but this is not recommended.

If the indexed file contains variable-length records, *data-name-3* shall be contained within the first *x* bytes of the record, where *x* equals the minimum record size specified for the file. *data-name-3* can exceed the minimum record size, but this is not recommended. For more information, see "RECORD clause" on page 156.

The data description of *data-name-3* and its relative location within the record must be the same as those used when the file was defined. The number of alternate record keys for the file must also be the same as that used when the file was created.

The leftmost character position of *data-name-3* must not be the same as the leftmost character position of the prime record key, or of another alternate record key.

record-key-name-2

record-key-name-2 has the class and category of *data-name-11*.

Restriction: *record-key-name* is supported for STL file system only.

data-name-11

data-name-11 must be described within a record description entry associated with the file. The key can have any of the following data categories:

- Alphanumeric
- Numeric
- Numeric-edited (with usage DISPLAY or NATIONAL)
- Alphanumeric-edited
- Alphabetic
- External floating-point (with usage DISPLAY or NATIONAL)
- Internal floating-point
- DBCS
- National
- National-edited

Regardless of the category of the key data item, the key is treated as an alphanumeric item. The collation order of the key is determined by the item's binary value order when the key is used for locating a record or for setting the file position indicator associated with the file.

All occurrences of *data-name-11* must be of the same category.

data-name-11 cannot be a windowed date field.

data-name-11 must not reference a variable-length data item. *data-name-11* can be qualified.

If the indexed file contains variable-length records, *data-name-11* must be contained within the first *x* bytes of the record, where *x* equals the minimum record size specified for the file. For more information, see “RECORD clause” on page 156.

If the DUPLICATES phrase is not specified, the values contained in the ALTERNATE RECORD KEY data item must be unique among records in the file.

If the DUPLICATES phrase is specified, the values contained in the ALTERNATE RECORD KEY data item can be duplicated within any records in the file. In sequential access, the records with duplicate keys are retrieved in the order in which they were placed in the file. In random access, only the first record written in a series of records with duplicate keys can be retrieved.

For files defined with the EXTERNAL clause, all file description entries in the run unit that are associated with the file must have data description entries for *data-name-3* that specify the same relative location in the record and the same length. The file description entries must specify the same number of alternate record keys and the same DUPLICATES phrase.

If the file connector referenced by *file-name-1* in the SELECT clause is an external file connector, all file-control entries in the run unit that reference this file connector must have the same data description entry for *data-name-3* and each *data-name-11* as well as their relative location within the associated record, the same number of alternate record keys, and the same DUPLICATES phrase. For details about external file connector, see “EXTERNAL clause” on page 170.

RELATIVE KEY clause

The RELATIVE KEY clause (format 3) identifies a data-name that specifies the relative record number for a specific logical record within a relative file.

data-name-4

Must be defined as an unsigned integer data item whose description does not contain the PICTURE symbol P. *data-name-4* must not be defined in a record description entry associated with this relative file. That is, the RELATIVE KEY is not part of the record. *data-name-4* can be qualified.

data-name-4 cannot be a windowed date field.

data-name-4 is required for ACCESS IS SEQUENTIAL only when the START statement is to be used. It is always required for ACCESS IS RANDOM and ACCESS IS DYNAMIC. When the START statement is executed, the system uses the contents of the RELATIVE KEY data item to determine the record at which sequential processing is to begin.

If a value is placed in *data-name-4*, and a START statement is not executed, the value is ignored and processing begins with the first record in the file.

If a relative file is to be referenced by a START statement, you must specify the RELATIVE KEY clause for that file.

For external files, *data-name-4* must reference an external data item, and the RELATIVE KEY phrase in each associated file-control entry must reference that same external data item in each case.

The ACCESS MODE IS RANDOM clause must not be specified for file-names specified in the USING or GIVING phrase of a SORT or MERGE statement.

PASSWORD clause

The PASSWORD clause is syntax checked, but has no effect on the execution of the program.

FILE STATUS clause

The FILE STATUS clause monitors the execution of each input-output operation for the file.

When the FILE STATUS clause is specified, the system moves a value into the file status key data item after each input-output operation that explicitly or implicitly refers to this file. The value indicates the status of execution of the statement. (See the file status key description under "Common processing facilities" on page 272.)

data-name-1

The file status key data item can be defined in the WORKING-STORAGE, LOCAL-STORAGE, or LINKAGE SECTION as one of the following items:

- A two-character data item of category alphanumeric
- A two-character data item of category national
- A two-digit data item of category numeric with usage DISPLAY or NATIONAL (an external decimal data item)

data-name-1 must not contain the PICTURE symbol 'P'.

data-name-1 can be qualified.

The file status key data item must not be variably located; that is, the data item cannot follow a data item that contains an OCCURS DEPENDING ON clause.

data-name-8

Represents information returned from the file system. Because the definitions are specific to the file systems and platforms, applications that depend on the specific values in *data-name-8* might not be portable across platforms.

How you define *data-name-8* is dependent on the file system you are using.

LSQ, MONGO, QSAM, RSD, SFS, and STL file systems

You must define *data-name-8* with PICTURE 9(6) and USAGE DISPLAY attributes. However, you can define an additional field with PICTURE X(*n*). The file system defines the feedback values, which are converted to the six-digit external decimal representation with leading zeros when the file systems feedback value is less than 100000. If you have defined an additional field using PICTURE X(*n*), then X(*n*) contains additional information that describes any nonzero feedback code. (For most programs, an *n* value of 100 should be adequate to show the complete message text.)

Db2 file system

You must define *data-name-8* as a group item such as the following example:

```
01 FileStatus2.
  02 FS2-SQLCODE COMP PICTURE S9(9).
  02 FS2-SQLSTATE PICTURE X(5).
```

The runtime values in FS2-SQLCODE and FS2-SQLSTATE represent SQL feedback information for the operation that is previously completed.

I-O-CONTROL paragraph

The I-O-CONTROL paragraph of the input-output section specifies when checkpoints are to be taken and the storage areas to be shared by different files. This paragraph is optional in a COBOL program.

The keyword I-O-CONTROL can appear only once, at the beginning of the paragraph. The word I-O-CONTROL must begin in Area A and must be followed by a separator period.

The order in which I-O-CONTROL paragraph clauses are written is not significant. The I-O-CONTROL paragraph ends with a separator period.

Format: sequential-i-o-control-entry

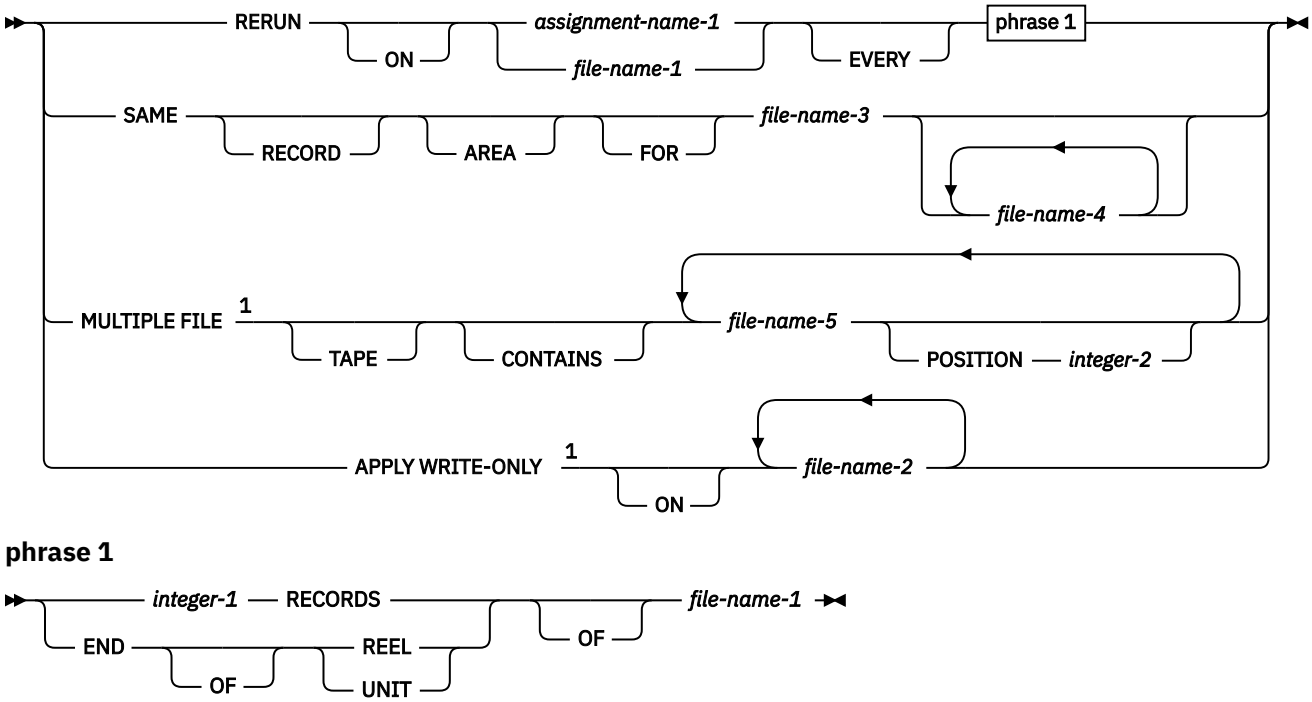

Notes:

[1] The MULTIPLE FILE clause and APPLY WRITE-ONLY clause are syntax checked, but have no effect on the execution of the program.

Format: relative-and-indexed-i-o-control-entry

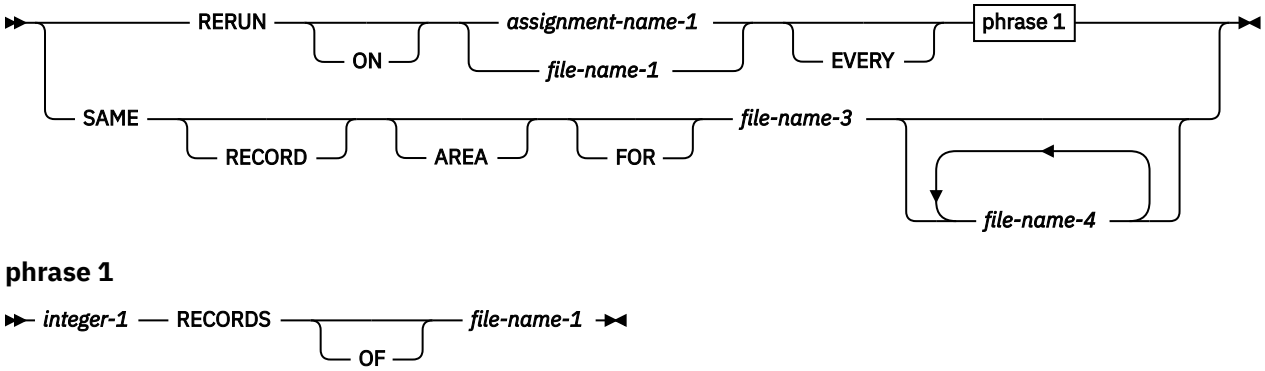

Format: line-sequential-i-o-control-entry

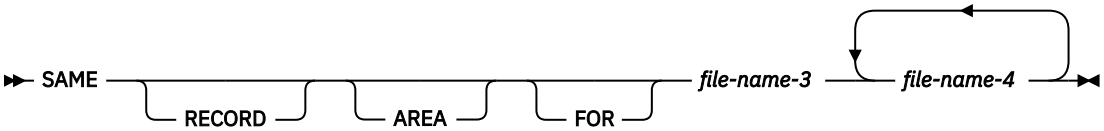

Format: sort/merge-i-o-control-entry

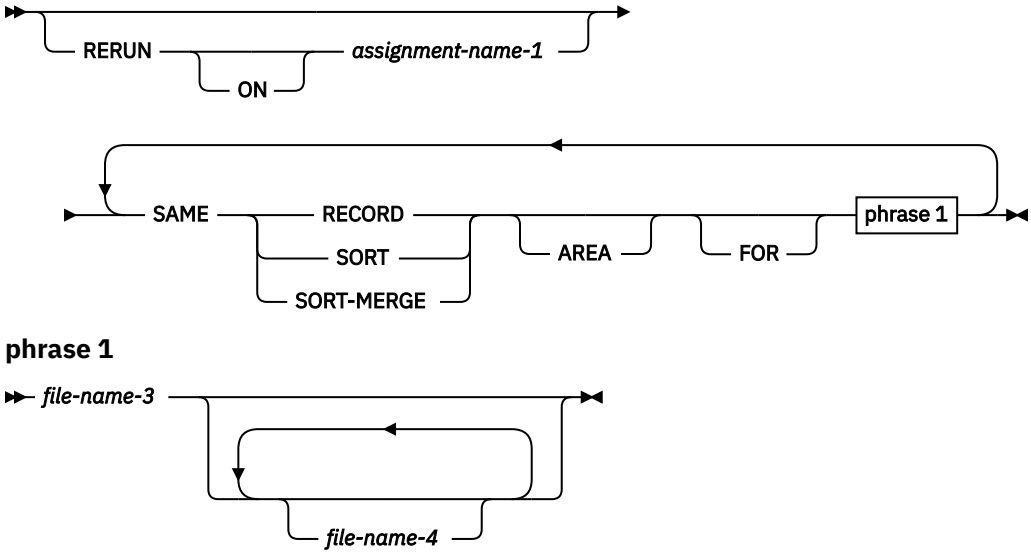

RERUN clause

The RERUN clause specifies that checkpoint records are to be taken. Subject to the restrictions given with each phrase, more than one RERUN clause can be specified.

The RERUN clause is syntax checked, but has no effect on the execution of programs.

Do not use the RERUN clause:

- For files described with the EXTERNAL clause
- In programs with the RECURSIVE clause specified

file-name-1
Must be a sequentially organized file.

assignment-name-1
The external file for the checkpoint file. It must not be the same assignment-name as that specified in any ASSIGN clause throughout the entire program, including contained and containing programs.

SORT/MERGE considerations:

When the RERUN clause is specified in the I-O-CONTROL paragraph, checkpoint records are written at logical intervals determined by the sort/merge program during execution of each SORT or MERGE statement in the program. When the RERUN clause is omitted, checkpoint records are not written.

There can be only one SORT/MERGE I-O-CONTROL paragraph in a program, and it cannot be specified in contained programs. It will have a global effect on all SORT and MERGE statements in the program unit.

EVERY *integer-1* RECORDS
A checkpoint record is to be written for every *integer-1* records in *file-name-1* that are processed.

When multiple *integer-1* RECORDS phrases are specified, no two of them can specify the same value for *file-name-1*.

If you specify the *integer-1* RECORDS phrase, you must specify *assignment-name-1*.

EVERY END OF REEL/UNIT
A checkpoint record is to be written whenever end-of-volume for *file-name-1* occurs. The terms REEL and UNIT are interchangeable.

When multiple END OF REEL/UNIT phrases are specified, no two of them can specify the same value for *file-name-1*.

The END OF REEL/UNIT phrase can be specified only if *file-name-1* is a sequentially organized file.

SAME AREA clause

The SAME AREA clause is syntax checked, but has no effect on the execution of the program.

SAME RECORD AREA clause

The SAME RECORD AREA clause specifies that two or more files are to use the same main storage area for processing the current logical record.

The files named in a SAME RECORD AREA clause need not have the same organization or access.

file-name-3 , file-name-4
Must be specified in the file-control paragraph of the same program. *file-name-3* and *file-name-4* must not reference a file that is defined with the EXTERNAL clause.

All of the files can be opened at the same time. A logical record in the shared storage area is considered to be both of the following ones:

- A logical record of each opened output file in the SAME RECORD AREA clause
- A logical record of the most recently read input file in the SAME RECORD AREA clause

More than one SAME RECORD AREA clause can be included in a program. However:

- A specific file-name must not appear in more than one SAME RECORD AREA clause.
- If one or more file-names of a SAME AREA clause appear in a SAME RECORD AREA clause, all the file-names in that SAME AREA clause must appear in that SAME RECORD AREA clause. However, the

SAME RECORD AREA clause can contain additional file-names that do not appear in the SAME AREA clause.

- The rule that in the SAME AREA clause only one file can be open at one time takes precedence over the SAME RECORD AREA rule that all the files can be open at the same time.
- If the SAME RECORD AREA clause is specified for several files, the record description entries or the file description entries for these files must not include the GLOBAL clause.
- The SAME RECORD AREA clause must not be specified when the RECORD CONTAINS 0 CHARACTERS clause is specified.

The files named in the SAME RECORD AREA clause need not have the same organization or access.

SAME SORT AREA clause

The SAME SORT AREA clause is syntax checked but has no effect on the execution of the program.

file-name-3 , file-name-4
Must be specified in the file-control paragraph of the same program. *file-name-3* and *file-name-4* must not reference a file that is defined with the EXTERNAL clause.

When the SAME SORT AREA clause is specified, at least one file-name specified must name a sort file. Files that are not sort files can also be specified. The following rules apply:

- More than one SAME SORT AREA clause can be specified. However, a given sort file must not be named in more than one such clause.
- If a file that is not a sort file is named in both a SAME AREA clause and in one or more SAME SORT AREA clauses, all the files in the SAME AREA clause must also appear in that SAME SORT AREA clause.
- Files named in a SAME SORT AREA clause need not have the same organization or access.
- Files named in a SAME SORT AREA clause that are not sort files do not share storage with each other unless they are named in a SAME AREA or SAME RECORD AREA clause.
- During the execution of a SORT or MERGE statement that refers to a sort or merge file named in this clause, any nonsort or nonmerge files associated with file-names named in this clause must not be in the open mode.

SAME SORT-MERGE AREA clause

The SAME SORT-MERGE AREA clause is equivalent to the SAME SORT AREA clause.

For more details, see “SAME SORT AREA clause” on page 131.

MULTIPLE FILE TAPE clause

The MULTIPLE FILE TAPE clause (format 1) specifies that two or more files share the same physical reel of tape.

This clause is syntax checked, but has no effect on the execution of the program.

APPLY WRITE-ONLY clause

The APPLY WRITE-ONLY clause is syntax checked, but has no effect on the execution of the program.

Part 5. Data division

© Copyright IBM Corp. 2021, 2025

Chapter 16. DATA DIVISION overview

This overview describes the structure of the DATA DIVISION for programs.

Each section in the DATA DIVISION has a specific logical function within a COBOL program and can be omitted when that logical function is not needed. If included, the sections must be written in the order shown. The DATA DIVISION is optional.

Program data division

The DATA DIVISION of a COBOL source program describes, in a structured manner, all the data to be processed by the program.

Format: program data division

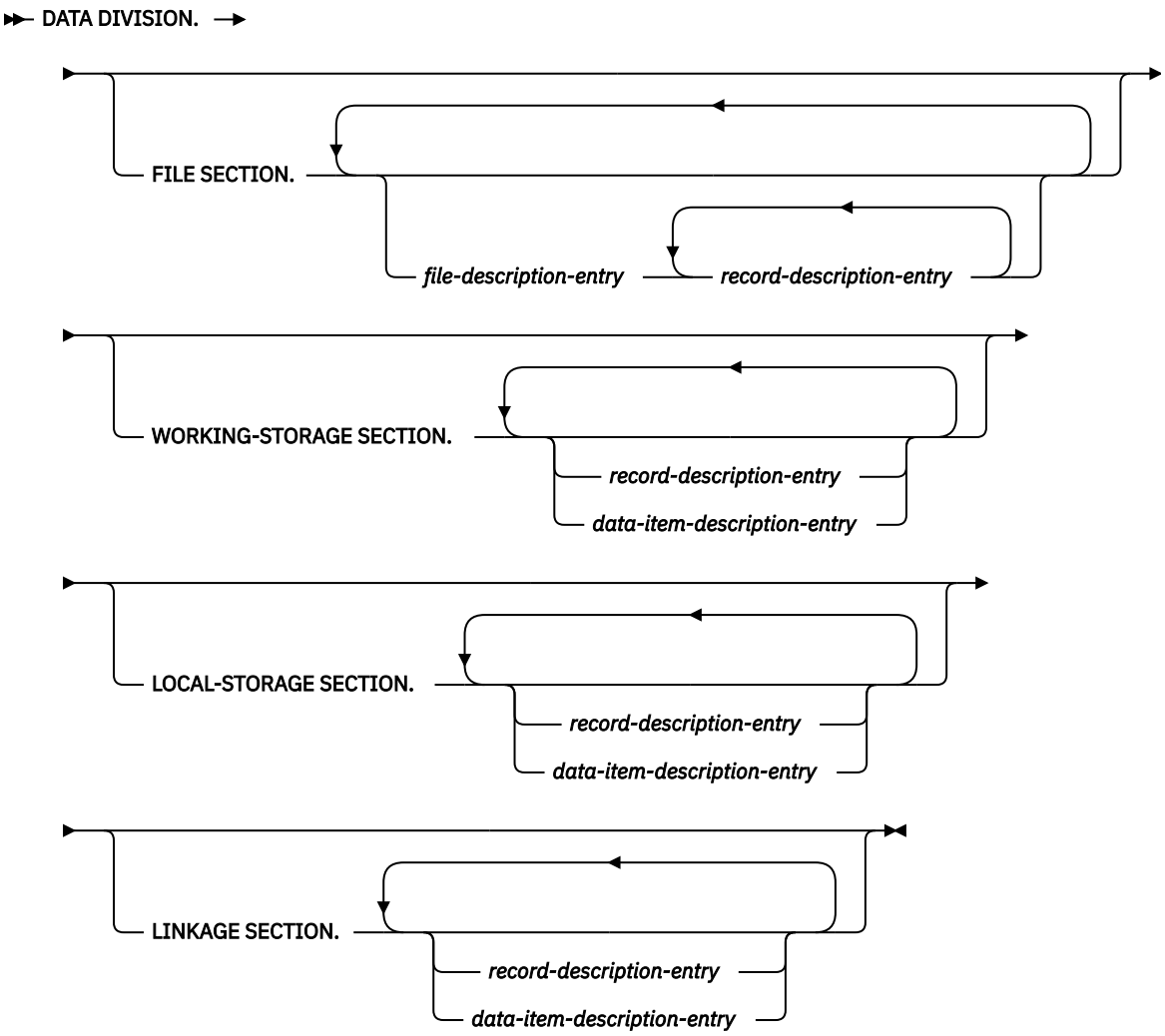

© Copyright IBM Corp. 2021, 2025

FILE SECTION

The FILE SECTION defines the structure of data files. The FILE SECTION must begin with the header FILE SECTION, followed by a separator period.

file-description-entry
Represents the highest level of organization in the FILE SECTION. It provides information about the physical structure and identification of a file, and gives the record-names associated with that file. For the format and the clauses required in a file description entry, see Chapter 17, "File description entries," on page 149.

record-description-entry
A set of data description entries (described in Chapter 18, "Data description entry," on page 161) that describe the particular records contained within a particular file, or describe a type-name (by using the TYPEDEF clause).

A record in the FILE SECTION must be described as an alphanumeric group item, a national group item, or an elementary data item of class alphabetic, alphanumeric, DBCS, national, or numeric.

More than one record description entry can be specified; each entry that does not describe a type-name is an alternative description of the same record storage area.

Data areas described in the FILE SECTION are not available for processing unless the file that contains the data area is open. Type-names defined in the FILE SECTION may be used in WORKING-STORAGE, LOCAL-STORAGE, or LINKAGE SECTION to define other data items.

WORKING-STORAGE SECTION

The WORKING-STORAGE SECTION describes data records that are not part of data files but are developed and processed by a program. The WORKING-STORAGE SECTION also describes data items whose values are assigned in the source program and do not change during execution of the object program.

The WORKING-STORAGE SECTION must begin with the section header WORKING-STORAGE SECTION, followed by a separator period. Type-names may be defined in the WORKING-STORAGE SECTION.

Program WORKING-STORAGE
The WORKING-STORAGE SECTION for programs can also describe external data records, which are shared by programs throughout the run unit. All clauses that are used in record descriptions in the FILE SECTION and also the VALUE and EXTERNAL clauses (which might not be specified in record description entries in the FILE SECTION) can be used in record descriptions in the WORKING-STORAGE SECTION.

The WORKING-STORAGE SECTION contains record description entries and data description entries for independent data items, called *data item description entries*.

record-description-entry
Data entries in the WORKING-STORAGE SECTION that bear a definite hierarchic relationship to one another must be grouped into records structured by level number. See Chapter 18, "Data description entry," on page 161 for more information.

data-item-description-entry
Independent items in the WORKING-STORAGE SECTION that bear no hierarchic relationship to one another need not be grouped into records provided that they do not need to be further subdivided. Instead, they are classified and defined as independent elementary items. Each is defined in a separate data-item description entry that begins with either the level number 77 or 01. See Chapter 18, "Data description entry," on page 161 for more information.

LOCAL-STORAGE SECTION

The LOCAL-STORAGE SECTION defines storage that is allocated and freed on a per-invocation basis. The LOCAL-STORAGE SECTION uses stack memory.

On each invocation, data items defined in the LOCAL-STORAGE SECTION are reallocated. Each data item that has a VALUE clause is initialized to the value specified in that clause.

For nested programs, data items defined in the LOCAL-STORAGE SECTION are allocated upon each invocation of the containing outermost program. However, each data item is reinitialized to the value specified in its VALUE clause each time the nested program is invoked.

Data items defined in the LOCAL-STORAGE SECTION cannot specify the EXTERNAL clause.

The LOCAL-STORAGE SECTION must begin with the header LOCAL-STORAGE SECTION, followed by a separator period.

You can specify the LOCAL-STORAGE SECTION in recursive and nonrecursive programs.

LINKAGE SECTION

The LINKAGE SECTION describes data made available from another program.

record-description-entry
See "WORKING-STORAGE SECTION" on page 136 for a description.

data-item-description-entry
See "WORKING-STORAGE SECTION" on page 136 for a description.

Record description entries and data item description entries in the LINKAGE SECTION provide names and descriptions, but storage within the program is not reserved because the data area exists elsewhere. *Type-names* may be defined in the LINKAGE SECTION.

Any data description clause can be used to describe items in the LINKAGE SECTION with the following exceptions:

- You cannot specify the VALUE clause for items other than level-88 items.
- You cannot specify the EXTERNAL clause.

You can specify the GLOBAL clause in the LINKAGE SECTION.

Data units

Data is grouped into the conceptual units as listed in the topic.

- File data
- Program data

File data

File data is contained in files. A *file* is a collection of data records that exist on some input-output device. A file can be considered as a group of physical records; it can also be considered as a group of logical records. The DATA DIVISION describes the relationship between physical and logical records.

For more information, see "FILE SECTION" on page 154.

A *physical record* is a unit of data that is treated as an entity when moved into or out of storage. The size of a physical record is determined by the particular input-output device on which it is stored. The size does not necessarily have a direct relationship to the size or content of the logical information contained in the file.

A *logical record* is a unit of data whose subdivisions have a logical relationship. A logical record can itself be a physical record (that is, be contained completely within one physical unit of data); several logical

records can be contained within one physical record, or one logical record can extend across several physical records.

File description entries specify the physical aspects of the data (such as the size relationship between physical and logical records, the size and names of the logical records, labeling information, and so forth).

Record description entries describe the logical records in the file (including the category and format of data within each field of the logical record), different values the data might be assigned, and so forth.

After the relationship between physical and logical records has been established, only logical records are made available to you. For this reason, a reference in this information to "records" means logical records, unless the term "physical records" is used.

Program data

Program data is created by a program instead of being read from a file.

The concept of logical records applies to program data as well as to file data. Program data can thus be grouped into logical records, and be defined by a series of record description entries. Items that need not be so grouped can be defined in independent data description entries (called *data item description entries*).

Data relationships

The relationships among all data to be used in a program are defined in the DATA DIVISION through a system of level indicators and level-numbers.

A *level indicator*, with its descriptive entry, identifies each file in a program. Level indicators represent the highest level of any data hierarchy with which they are associated. FD is the file description level indicator and SD is the sort-merge file description level indicator.

A *level-number*, with its descriptive entry, indicates the properties of specific data. Level-numbers can be used to describe a data hierarchy; they can indicate that this data has a special purpose. Although they can be associated with (and subordinate to) level indicators, they can also be used independently to describe internal data or data common to two or more programs. (See “Level-numbers” on page 164 for level-number rules.)

Levels of data

After a record has been defined, it can be subdivided to provide more detailed data references.

For example, in a customer file for a department store, one complete record could contain all data that pertains to one customer. Subdivisions within that record could be, for example, customer name, customer address, account number, department number of sale, unit amount of sale, dollar amount of sale, previous balance, and other pertinent information.

The basic subdivisions of a record (that is, those fields not further subdivided) are called *elementary items*. Thus a record can be made up of a series of elementary items or can itself be an elementary item.

It might be necessary to refer to a set of elementary items; thus, elementary items can be combined into *group items*. Groups can also be combined into a more inclusive group that contains one or more subgroups. Thus within one hierarchy of data items, an elementary item can belong to more than one group item.

A system of level-numbers specifies the organization of elementary and group items into records. Special level-numbers are also used to identify data items used for special purposes.

Levels of data in a record description entry

Each group and elementary item in a record requires a separate entry, and each must be assigned a level-number.

A level-number is a one-digit or two-digit integer between 01 and 49, or one of three special level-numbers: 66, 77, or 88. The following level-numbers are used to structure records:

01
This level-number specifies the record itself, and is the most inclusive level-number possible. A level-01 entry can be an alphanumeric group item, a national group item, or an elementary item. The level number must begin in Area A. Type-names (defined by using the TYPEDEF clause) must be level-01 items.

02 through 49
These level-numbers specify group and elementary items within a record. They can begin in Area A or Area B. Less inclusive data items are assigned higher (not necessarily consecutive) level-numbers in this series.

The relationship between level-numbers within a group item defines the hierarchy of data within that group.

A group item includes all group and elementary items that follow it until a level-number less than or equal to the level-number of that group is encountered.

The following figure illustrates a group wherein all groups immediately subordinate to the level-01 entry have the same level-number.

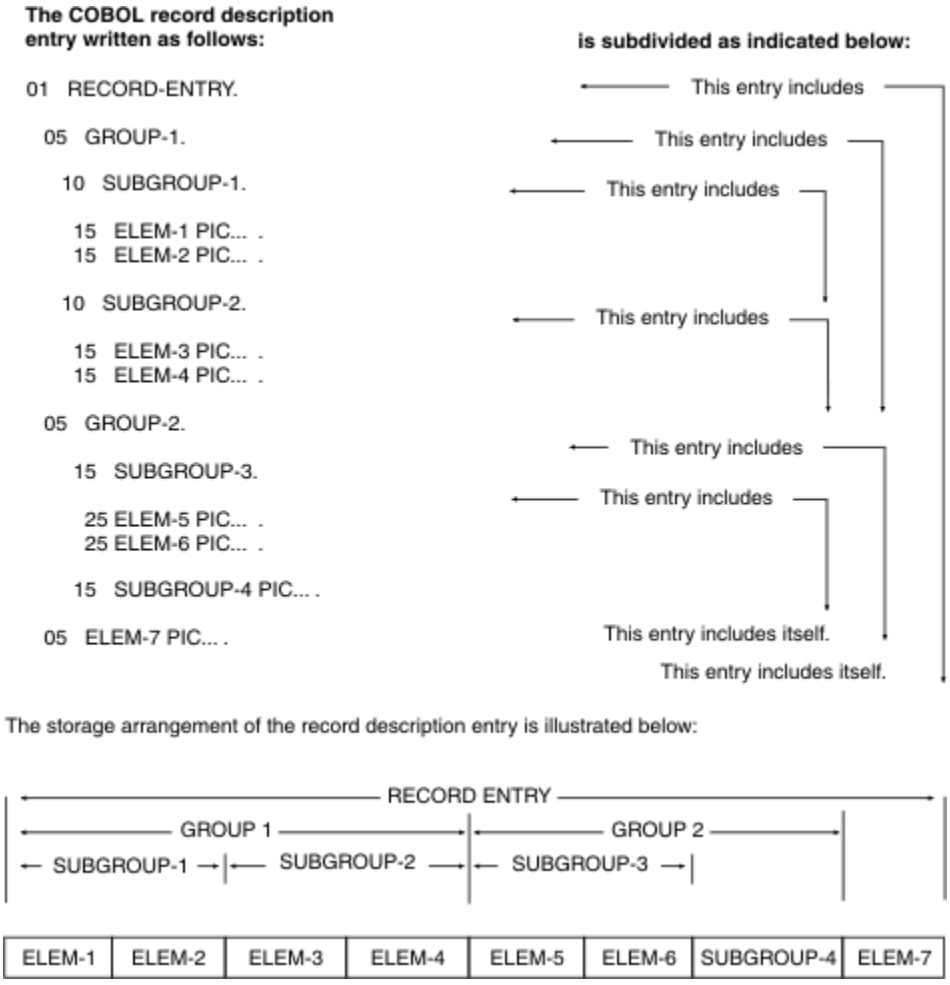

You can also define groups with subordinate items that have different level-numbers for the same level in the hierarchy. For example, `05 EMPLOYEE-NAME` and `04 EMPLOYEE-ADDRESS` in `EMPLOYEE-RECORD`

below define the same level in the hierarchy. The compiler renumbers the levels in a relative fashion, as shown in MAP output.

```
01   EMPLOYEE-RECORD.
     05  EMPLOYEE-NAME.
         10  FIRST-NAME PICTURE  X(10).
         10  LAST-NAME  PICTURE  X(10).
     04  EMPLOYEE-ADDRESS.
         08  STREET     PICTURE  X(10).
         08  CITY       PICTURE  X(10).
```

The following record description entry defines the same data hierarchy as the preceding record description entry:

```
01   EMPLOYEE-RECORD.
     02  EMPLOYEE-NAME.
         03  FIRST-NAME PICTURE  X(10).
         03  LAST-NAME  PICTURE  X(10).
     02  EMPLOYEE-ADDRESS.
         03  STREET     PICTURE  X(10).
         03  CITY       PICTURE  X(10).
```

Elementary items can be specified at any level within the hierarchy.

Special level-numbers

Special level-numbers identify items that do not structure a record.

The special level-numbers are:

66
Identifies items that must contain a RENAMES clause; such items regroup previously defined data items. (For details, see “RENAMES clause” on page 206.)

77
Identifies data item description entries that are independent WORKING-STORAGE, LOCAL-STORAGE, or LINKAGE SECTION items; they are not subdivisions of other items and are not subdivided themselves. Level-77 items must begin in Area A.

88
Identifies any condition-name entry that is associated with a particular value of a conditional variable. (For details, see “VALUE clause” on page 223.)

Level-77 and level-01 entries in the WORKING-STORAGE, LOCAL-STORAGE, or LINKAGE SECTION that are referenced in a program must be given unique data-names because level-77 and level-01 entries cannot be qualified. Subordinate data-names that are referenced in the program must be either uniquely defined, or made unique through qualification. Unreferenced data-names need not be uniquely defined.

Indentation

Successive data description entries can begin in the same column as preceding entries, or can be indented.

Indentation is useful for documentation but does not affect the action of the compiler.

Classes and categories of group items

COBOL for Linux has two types of groups: alphanumeric groups and national groups.

Groups that do not specify a GROUP-USAGE clause are alphanumeric groups. An alphanumeric group has class and category alphanumeric and is treated as though its usage were DISPLAY, regardless of the representation of the elementary data items that are contained within the group. In many operations, such as moves and compares, alphanumeric groups are treated as though they were elementary items of category alphanumeric, except that no editing or conversion of data representation takes place. In other

operations, such as MOVE CORRESPONDING and ADD CORRESPONDING, the subordinate data items are processed as separate elementary items.

The content of an alphanumeric group is treated as though it were represented in native single-byte characters when the CHAR(NATIVE) compiler option is used, and as single-byte EBCDIC characters when the CHAR(EBCDIC) compiler option is used.

National groups are defined by a GROUP-USAGE clause with the NATIONAL phrase at the group level. All subordinate data items must be explicitly or implicitly described with usage NATIONAL, and subordinate groups must be explicitly or implicitly described with GROUP-USAGE NATIONAL.

Unless stated otherwise, a national group item is processed exactly as though it were an elementary data item of usage national, class and category national, described with PICTURE N(m), where m is the length of the group in national character positions. Because national groups contain only national characters, data is converted as necessary for moves and compares. The compiler ensures proper truncation and padding. In other operations, such as MOVE CORRESPONDING and ADD CORRESPONDING, the subordinate data items are processed as separate elementary items. See "GROUP-USAGE clause" on page 173 for details.

The table below summarizes the classes and categories of group items.

Table 11. ***Classes and categories of group items***

Group description	Class of group	Category of group	USAGE of elementary items within a group	USAGE of a group
Without a GROUP-USAGE clause	Alphanumeric	Alphanumeric (even though the elementary items in the group can have any category)	Any	Treated as DISPLAY when usage is relevant
With explicit or implicit GROUP-USAGE clause	National	National	NATIONAL	NATIONAL

Classes and categories of data

Most data and all literals used in a COBOL program are divided into classes and categories. Data classes are groupings of data categories. Data categories are determined by the attributes of data description entries or function definitions.

For more information about data categories, see "Category descriptions" on page 143.

The following elementary data items do not have a class and category:

- Index data items
- Items described with USAGE POINTER, USAGE FUNCTION-POINTER, or USAGE PROCEDURE-POINTER

All other types of elementary data items have a class and category as shown in Table 12 on page 142.

A function references an elementary data item and belongs to the data class and category associated with the type of the function, as shown in Table 13 on page 143.

Literals have a class and category as shown in Table 14 on page 143. Figurative constants (except NULL) have a class and category that depends on the literal or value represented by the figurative constant in the context of its use. For details, see "Figurative constants" on page 15.

All group items have a class and category, even if the subordinate elementary items belong to another class and category. For the classification of group items, see "Classes and categories of group items" on page 140.

Table 12. ***Class, category, and usage of elementary data items***		
Class of elementary data items[2]	**Category**	**Usage**
Alphabetic	Alphabetic	DISPLAY
Alphanumeric	Alphanumeric	DISPLAY
	Alphanumeric-edited	DISPLAY
	Numeric-edited	DISPLAY
Boolean[1]	Boolean[1]	DISPLAY

Table 12. ***Class, category, and usage of elementary data items***		
Class of elementary data items[2]	**Category**	**Usage**
Date-Time[1]	Date[1] Time[1]	DISPLAY PACKED-DECIMAL
	Timestamp[1]	DISPLAY
DBCS[1]	DBCS[1]	DISPLAY-1
National[1]	National[1]	NATIONAL
	National-edited[1]	NATIONAL
	Numeric-edited[1]	NATIONAL
Numeric	Numeric	DISPLAY (type zoned decimal)
		NATIONAL (type national decimal)
		PACKED-DECIMAL (type internal decimal)
		COMP-3 (type internal decimal)
		BINARY
		COMP
		COMP-4
		COMP-5
	Internal floating-point[1]	COMP-1
		COMP-2
	External floating-point[1]	DISPLAY
		NATIONAL

1. IBM Extension
2. The class of group items is alphanumeric for all categories.

Table 13. ***Classes and categories of functions***	
Function type	**Class and category**
Alphanumeric	Alphanumeric
National	National
Integer	Numeric
Numeric	Numeric

Table 14. ***Classes and categories of literals***	
Literal	**Class and category**
Alphanumeric (including hexadecimal formats)	Alphanumeric
DBCS	DBCS
National (including hexadecimal formats)	National
Numeric (fixed-point and floating-point)	Numeric

Category descriptions

The category of a data item is established by the attributes of its data description entry (such as its PICTURE character-string or USAGE clause) or by its function definition.

The meaning of each category is given below.

Alphabetic

A data item is described as category alphabetic by its PICTURE character-string. For PICTURE character-string details, see “Alphabetic items” on page 191.

A data item of category alphabetic is referred to as an alphabetic data item.

Alphanumeric

Each of the following data items is of category alphanumeric:

- An elementary data item described as alphanumeric by its PICTURE character-string. For PICTURE character-string details, see “Alphanumeric items” on page 192.
- An alphanumeric group item.
- An alphanumeric function.
- The following special registers:
  - DEBUG-ITEM
  - SHIFT-OUT
  - SHIFT-IN
  - SORT-CONTROL
  - SORT-MESSAGE

- WHEN-COMPILED
- XML-EVENT
- XML-TEXT

Alphanumeric-edited

A data item is described as category alphanumeric-edited by its PICTURE character-string. For PICTURE character-string details, see “Alphanumeric-edited items” on page 192.

A data item of category alphanumeric-edited is referred to as an alphanumeric-edited data item.

Boolean

Boolean data is an IBM extension that provides a means of modifying and passing the values of the indicators associated with the display screen formats and externally described printer files. A boolean value of 0 is the *off* status of the indicator, and a boolean value of 1 is the *on* status of the indicator.

A boolean literal contains a single 0 or 1, is enclosed in quotation marks, and is immediately preceded by an identifying B. A boolean literal is defined as either B"0" or B"1".

A boolean character occupies one byte.

When the figurative constant ZERO is associated with a boolean data item or a boolean literal, it represents the boolean literal B"0".

The reserved word ALL is valid with a boolean literal.

For PICTURE character-string details, see “Boolean items” on page 191.

A data item of category boolean is referred to as a boolean data item.

Date, time, timestamp

A data item is described as category date, time, or timestamp by its FORMAT clause. For details about the FORMAT clause, see “FORMAT clause” on page 170.

DBCS

A data item is described as category DBCS by its PICTURE character-string and the NSYMBOL(DBCS) compiler option or by an explicit USAGE DISPLAY-1 clause. For PICTURE character-string details, see “DBCS items” on page 192.

A data item of category DBCS is referred to as a DBCS data item.

External floating-point

A data item is described as category external floating-point by its PICTURE character-string. For PICTURE character-string details, see “External floating-point items” on page 193. An external floating-point data item can be described with USAGE DISPLAY or USAGE NATIONAL.

When the usage is DISPLAY, the item is referred to as a display floating-point data item.

When the usage is NATIONAL, the item is referred to as a national floating-point data item.

An external floating-point data item is of class numeric and, unless specifically excluded, is included in a reference to a numeric data item.

Internal floating-point

A data item is described as category internal floating-point by a USAGE clause with the COMP-1 or COMP-2 phrase.

A data item of category internal floating-point is referred to as an internal floating-point data item. An internal floating-point data item is of class numeric and, unless specifically excluded, is included in a reference to a numeric data item.

National

Each of the following data items is of category national:

- A data item that is described as category national by its PICTURE character-string and the NSYMBOL(NATIONAL) compiler option or by an explicit USAGE NATIONAL clause. For PICTURE character-string details, see "National items" on page 194.
- A group item explicitly or implicitly described with a GROUP-USAGE NATIONAL clause.
- A national function.
- The special register XML-NTEXT.

National-edited

A data item is described as category national-edited by its PICTURE character-string. For PICTURE character-string details, see "National-edited items" on page 195.

A data item of category national-edited is referred to as a national-edited data item.

Numeric

Each of the following data items is of category numeric:

- An elementary data item described as numeric by its PICTURE character-string and not described with a BLANK WHEN ZERO clause. For PICTURE character-string details, see "Numeric items" on page 196.
- An elementary data item described with one of the following usages:
  - BINARY, COMPUTATIONAL, COMPUTATIONAL-4, COMPUTATIONAL-5, COMP, COMP-4, or COMP-5
  - PACKED-DECIMAL, COMPUTATIONAL-3, or COMP-3
- A special register of numeric type:
  - LENGTH OF
  - LINAGE-COUNTER
  - RETURN-CODE
  - SORT-CORE-SIZE
  - SORT-FILE-SIZE
  - SORT-MODE-SIZE
  - SORT-RETURN
  - TALLY
  - XML-CODE
- A numeric function.
- An integer function.

A data item of category numeric is referred to as a numeric data item.

Numeric-edited

Each of the following data items is of category numeric-edited:

- A data item described as numeric-edited by its PICTURE character-string. For PICTURE character-string details, see "Numeric-edited items" on page 197.
- A data item described as numeric by its PICTURE character-string and described with a BLANK WHEN ZERO clause.

Alignment rules

The standard alignment rules for positioning data in an elementary item depend on the category of a receiving item.

A receiving item is an item into which the data is moved. For more details about a receiving item, see "Elementary moves" on page 330.

Numeric
For numeric receiving items, the following rules apply:

1. The data is aligned on the assumed decimal point and, if necessary, truncated or padded with zeros. (An *assumed decimal point* is one that has logical meaning but that does not exist as an actual character in the data.)
2. If an assumed decimal point is not explicitly specified, the receiving item is treated as though an assumed decimal point is specified immediately to the right of the field. The data is then treated according to the preceding rule.

Numeric-edited
The data is aligned on the decimal point, and (if necessary) truncated or padded with zeros at either end except when editing causes replacement of leading zeros.

Internal floating-point
A decimal point is assumed immediately to the left of the field. The data is then aligned on the leftmost digit position that follows the decimal point, with the exponent adjusted accordingly.

External floating-point
The data is aligned on the leftmost digit position; the exponent is adjusted accordingly.

Alphanumeric, alphanumeric-edited, alphabetic, DBCS
For these receiving items, the following rules apply:

1. The data is aligned at the leftmost character position, and (if necessary) truncated or padded with spaces at the right.
2. If the JUSTIFIED clause is specified for this receiving item, the above rule is modified as described in "JUSTIFIED clause" on page 174.

National, national-edited
For these receiving items, the following rules apply:

1. The data is aligned at the leftmost character position, and (if necessary) truncated or padded with default Unicode spaces (NX'2000') at the right. Truncation occurs at the boundary of a national character position.
2. If the JUSTIFIED clause is specified for this receiving item, the above rule is modified as described in "JUSTIFIED clause" on page 174.

Date, time, timestamp
For these receiving items, the following rules apply:

1. For class date-time items with a USAGE of DISPLAY, data is aligned at the leftmost character position, and (if necessary) padded with spaces to the right.
2. For class date-time items with a USAGE of PACKED-DECIMAL, data is aligned at the rightmost digit position, and (if necessary) padded with zeros to the left.

Character-string and item size

For items described with a PICTURE clause, the size of an elementary item is expressed in source code by the number of character positions described in the PICTURE character-string and a SIGN clause (if applicable). Storage size, however, is determined by the actual number of bytes the item occupies as determined by the combination of its PICTURE character-string, SIGN IS SEPARATE clause (if specified), and USAGE clause.

For items described with USAGE DISPLAY (categories alphabetic, alphanumeric, alphanumeric-edited, numeric-edited, numeric, and external floating-point), 1 byte of storage is reserved for each character position described by the item's PICTURE character-string and SIGN IS SEPARATE clause (if applicable).

For items described with USAGE DISPLAY-1 (category DBCS), 2 bytes of storage are reserved for each character position described by the item's PICTURE character-string.

For items described with USAGE NATIONAL (categories national, national-edited, numeric-edited, numeric, and external floating-point), 2 bytes of storage are reserved for each character position described by the item's PICTURE character-string and SIGN IS SEPARATE clause (if specified).

For internal floating-point items, the size of the item in storage is determined by its USAGE clause. USAGE COMPUTATIONAL-1 reserves 4 bytes of storage for the item; USAGE COMPUTATIONAL-2 reserves 8 bytes of storage.

Normally, when an arithmetic item is moved from a longer field into a shorter one, the compiler truncates the data to the number of digits represented in the shorter item's PICTURE character-string by truncating leading digits. For example, if a sending field with PICTURE S99999 that contains the value +12345 is moved to a BINARY receiving field with PICTURE S99, the data is truncated to +45. For additional information, see “USAGE clause” on page 216.

The TRUNC compiler option can affect the value of a binary numeric item. For information about TRUNC, see *TRUNC* in the *COBOL for Linux on x86 Programming Guide*.

Signed data

There are two categories of algebraic signs used in COBOL: operational signs and editing signs.

Operational signs

Operational signs are associated with signed numeric items, and indicate their algebraic properties.

The internal representation of an algebraic sign depends on the item's USAGE clause, its SIGN clause (if present), and the operating environment. (For further details about the internal representation, see *Examples: numeric data and internal representation* in the *COBOL for Linux on x86 Programming Guide*.)

Editing signs

Editing signs are associated with numeric-edited items. Editing signs are PICTURE symbols that identify the sign of the item in edited output.

Chapter 17. File description entries

In a COBOL program, the *File Description (FD) Entry* (or *Sort File Description (SD) Entry* for sort/merge files) represents the highest level of organization in the FILE SECTION. The order in which the optional clauses follow the FD or SD entry is not important.

Format 1: sequential file description entry

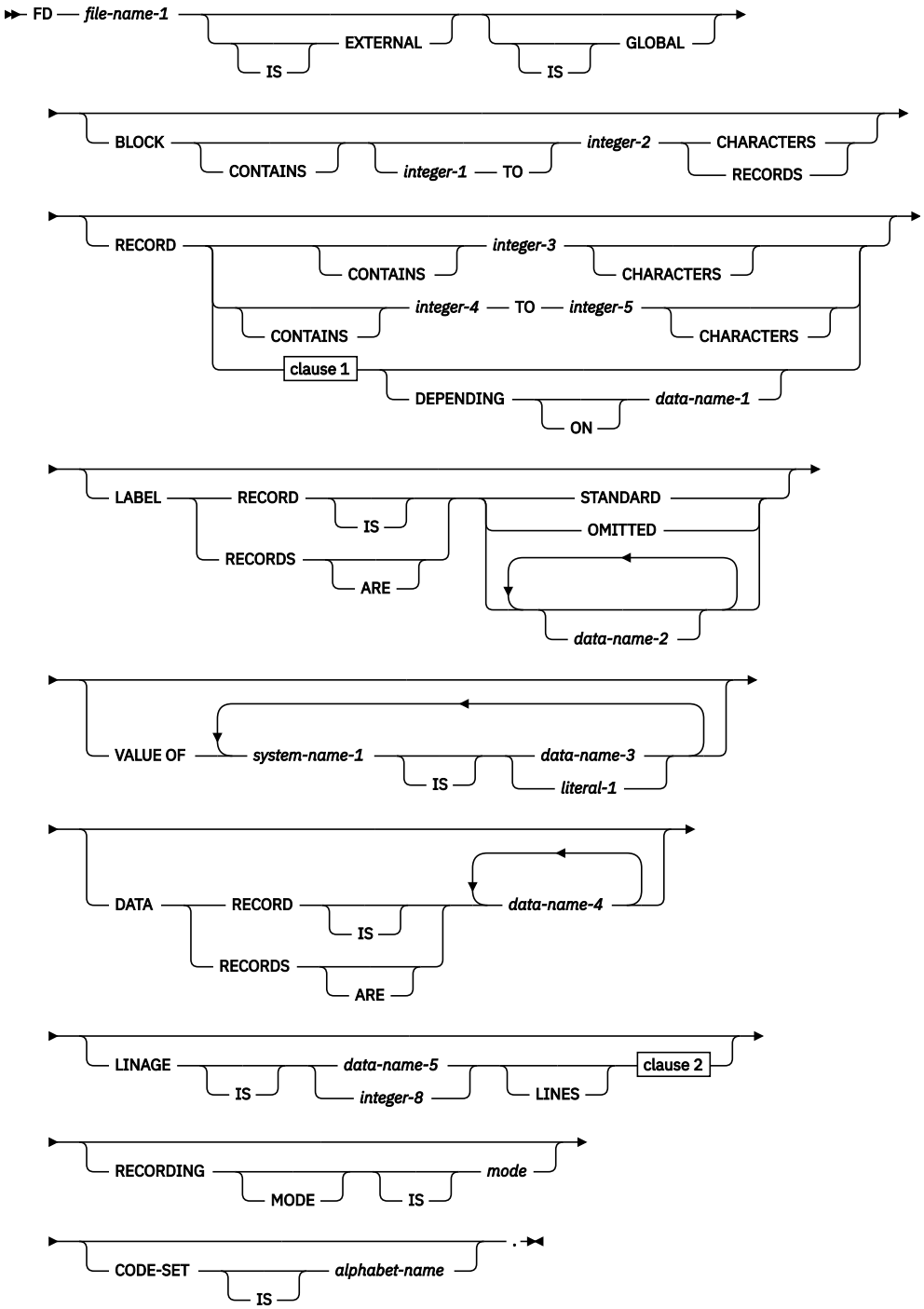

clause 1

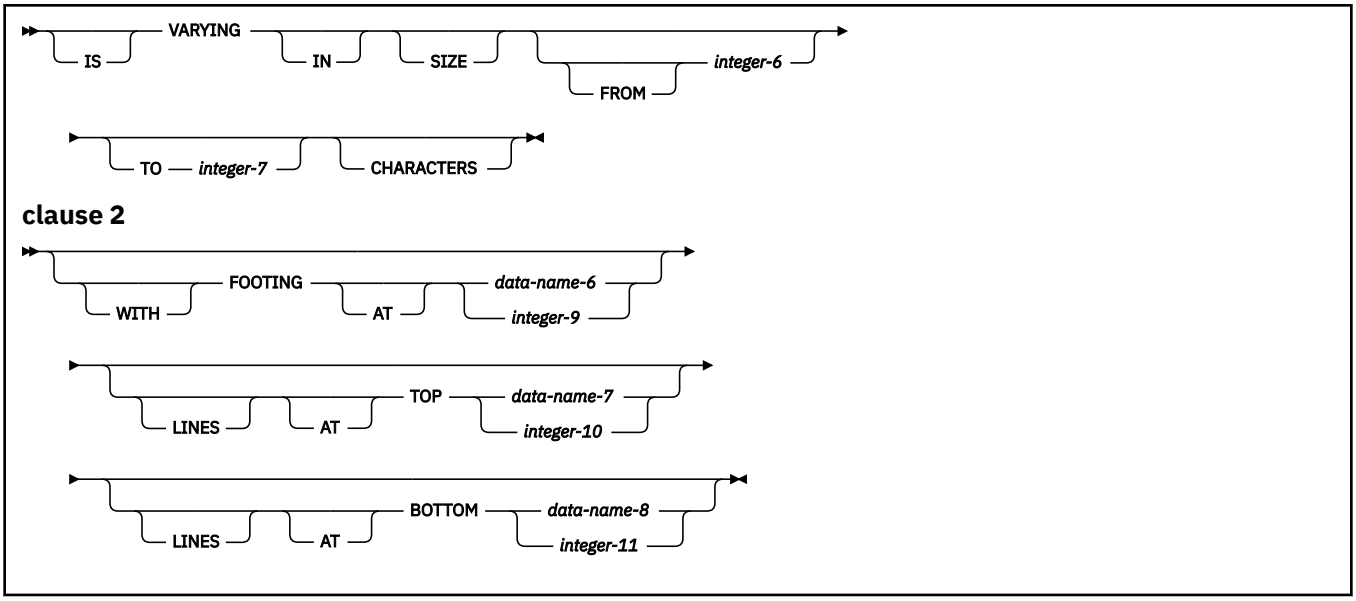
VARYING
IS
IN
SIZE
FROM
integer-6
TO
integer-7
CHARACTERS
clause 2
WITH
FOOTING
AT
data-name-6
integer-9
LINES
AT
TOP
data-name-7
integer-10
LINES
AT
BOTTOM
data-name-8
integer-11

Format 2: relative or indexed file description entry

```
FD — file-name-1 ┬─────────────────────────────────────────────────────────────────────────────┬──►
                 │   ┌─IS─┐ ┌─EXTERNAL─┐   ┌─IS─┐ ┌─GLOBAL─┐                                │
                 │   └────┘ └──────────┘   └────┘ └────────┘                                  │
                 ├─BLOCK ─┬─────────────────────────────────────────────────────────────────┬──►
                 │        │ ┌─CONTAINS─┐ ┌─integer-1 — TO─┐ integer-2 ─┬─CHARACTERS─┐         │
                 │        │ └──────────┘ └─────────────────┘            └─RECORDS────┘         │
                 ├─RECORD ─┬─────────────────────────────────────────────────────────────────┬──►
                 │         │ ┌─CONTAINS─┐ integer-3 ─┬─CHARACTERS─┐                           │
                 │         │ └──────────┘            └────────────┘                           │
                 │         │ ┌─CONTAINS─┐ integer-4 — TO — integer-5 ─┬─CHARACTERS─┐           │
                 │         │ └──────────┘                              └────────────┘           │
                 │         │ [clause 1] ─┬─────────────────────────────────────────────────┬──►
                 │         │             │ ┌─DEPENDING─┐ ┌─ON─┐ data-name-1                   │
                 │         │             │ └────────────┘ └────┘                               │
                 ├─LABEL ─┬─────────────────────────────────────────────────────────────────┬──►
                 │        │ ┌─RECORD─┐ ┌─IS─┐ ┌─STANDARD─┐                                   │
                 │        │ └────────┘ └────┘ └──────────┘                                   │
                 │        │ ┌─RECORDS─┐ ┌─ARE─┐ ┌─OMITTED─┐                                   │
                 │        │ └─────────┘ └─────┘ └─────────┘                                   │
                 ├─VALUE OF ─┬─────────────────────────────────────────────────────────────┬──►
                 │           │ ┌─system-name-1─┐ ┌─IS─┐ ┌─data-name-3─┐                     │
                 │           │ └───────────────┘ └────┘ └─literal-1────┘                     │
                 ├─DATA ─┬─────────────────────────────────────────────────────────────────┬──►
                 │       │ ┌─RECORD─┐ ┌─IS─┐ ┌─data-name-4─┐                               │
                 │       │ └────────┘ └────┘ └─────────────┘                               │
                 │       │ ┌─RECORDS─┐ ┌─ARE─┐                                              │
                 │       │ └─────────┘ └─────┘                                              │
                 └─────────────────────────────────────────────────────────────────────────┘
```

clause 1

```
┬─┬─IS─┬─VARYING ─┬─IN─┬─SIZE─┬─┬─integer-6─┬─┬──►
│ │    │          │    │      │ │ └─FROM────┘ │
│ │    │          │    │      │ │             │
├─┴────┴──────────┴────┴──────┴─┴─────────────┴──►
│ ┌─TO — integer-7─┐ ┌─CHARACTERS─┐
│ └────────────────┘ └────────────┘
└──────────────────────────────────────────────►◄
```

Format 3: line-sequential file description entry

```
FD — file-name-1 ┬──────────────────────────────────────────────────────────┬──────────────────────────────────────────────────────────┬──────────────────────────────────────────────────────────
```

Format 4: sort/merge file description entry

```
SD — file-name-1 →
  ├─ RECORD ─┬─ CONTAINS ─┘ integer-3 ─┬─ CHARACTERS ─┘
             ├─ CONTAINS ─┘ integer-4 — TO — integer-5 ─┬─ CHARACTERS ─┘
             └─ [clause 1] ─┬─ DEPENDING ─┬─ ON ─┘ data-name-1 ─┘
  ├─ DATA ─┬─ RECORD ─┬─ IS ─┘ ─┬─ data-name-4 ─┘
           └─ RECORDS ─┬─ ARE ─┘
  ├─ BLOCK ─┬─ CONTAINS ─┘ ─┬─ integer-1 — TO ─┘ integer-2 ─┬─ CHARACTERS ─┘
            └─ RECORDS ─┘
  ├─ LABEL ─┬─ RECORD ─┬─ IS ─┘ ─┬─ STANDARD ─┬
            └─ RECORDS ─┬─ ARE ─┘ ├─ OMITTED ─┤
                        ├─ data-name-2 ─┘
  ├─ VALUE OF ─┬─ system-name-1 ─┬─ IS ─┘ ─┬─ data-name-3 ─┬
               ├─ data-name-3 ─┤          ├─ literal-1 ─┤
               └─ literal-1 ─┘
  ├─ LINAGE ─┬─ IS ─┘ ─┬─ data-name-5 ─┬─ LINES ─┬─ [clause 2] ─┬
             ├─ integer-8 ─┘          ├─ LINES ─┤
             └─ LINES ─┘
  ├─ CODE-SET ─┬─ IS ─┘ ─┬─ alphabet-name ─┬
               └─ alphabet-name ─┘
  └─ . ─┤
```

clause 1

```
├─ IS ─┘ VARYING ─┬─ IN ─┘ ─┬─ SIZE ─┬─ FROM ─┬─ integer-6 ─┬
                 ├─ SIZE ─┤        ├─ integer-6 ─┤
                 └─ FROM ─┘
  ├─ TO — integer-7 ─┬─ CHARACTERS ─┬
                     └─ CHARACTERS ─┘
  └─ ─┤
```

clause 2

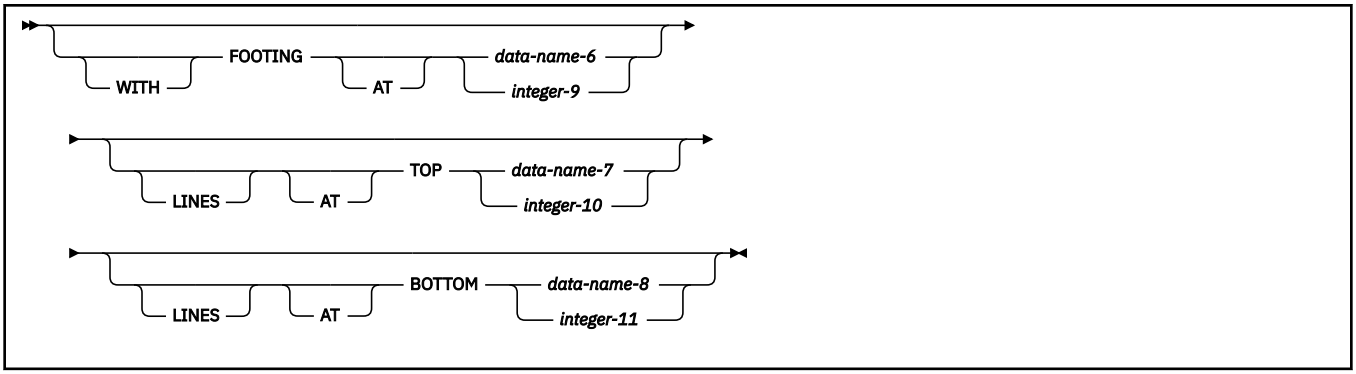

FILE SECTION

The FILE SECTION must contain a level-indicator for each input and output file. For all files except sort or merge files, the FILE SECTION must contain an FD entry. For each sort or merge file, the FILE SECTION must contain an SD entry.

file-name
Must follow the level indicator (FD or SD), and must be the same as that specified in the associated SELECT clause. *file-name* must adhere to the rules of formation for a user-defined word; at least one character must be alphabetic. *file-name* must be unique within this program.

One or more record description entries must follow *file-name*. A record description entry may describe a *type-name*. Each entry, which is not a type-name, implies a redefinition of the same storage area.

The clauses that follow *file-name* are optional, and they can appear in any order.

FD (formats 1, 2, and 3)
The last clause in the FD entry must be immediately followed by a separator period.

SD (format 4)
An SD entry must be written for each sort or merge file in the program. The last clause in the SD entry must be immediately followed by a separator period.

The following example illustrates the FILE SECTION entries needed for a sort or merge file:

```
SD  SORT-FILE.
01  SORT-RECORD  PICTURE X(80).
```

A record in the FILE SECTION must be described as an alphanumeric group item, a national group item, or an elementary item of class alphabetic, alphanumeric, DBCS, national, or numeric.

EXTERNAL clause

The EXTERNAL clause specifies that a file connector is external, and permits communication between two programs by the sharing of files.

A file connector is external if the storage associated with that file is associated with the run unit rather than with any particular program within the run unit. An external file can be referenced by any program in the run unit that describes the file. References to an external file from different programs that use separate descriptions of the file are always to the same file. In a run unit, there is only one representative of an external file.

In the FILE SECTION, the EXTERNAL clause can be specified only in file description entries.

The records appearing in the file description entry need not have the same name in corresponding external file description entries. In addition, the number of such records need not be the same in corresponding file description entries.

Use of the EXTERNAL clause does not imply that the associated file-name is a global name. See *Sharing data by using the EXTERNAL clause* in the *COBOL for Linux on x86 Programming Guide* for specific

information about the use of the EXTERNAL clause. The TYPEDEF clause cannot be specified in the same data description entry as the EXTERNAL clause; however, the TYPE clause can.

GLOBAL clause

The GLOBAL clause specifies that the file connector named by a file-name is a global name. A global file-name is available to the program that declares it and to every program that is contained directly or indirectly in that program.

The GLOBAL clause can be specified in the same data description entry as the TYPEDEF clause. The scope of the clause applies to the type-name only, and not to any data items which are defined using a global type-name with a TYPE clause.

A file-name is global if the GLOBAL clause is specified in the file description entry for that file-name. A record-name is global if the GLOBAL clause is specified in the record description entry by which the record-name is declared or, in the case of record description entries in the FILE SECTION, if the GLOBAL clause is specified in the file description entry for the file-name associated with the record description entry. Such record description entries may describe a type-name. For details on using the GLOBAL clause, see *Using data in input and output operations* and *Scope of names* in the *COBOL for Linux on x86 Programming Guide*.

Two programs in a run unit can reference global file connectors in the following circumstances:

- An external file connector can be referenced from any program that describes that file connector.
- If a program is contained within another program, both programs can refer to a global file connector by referring to an associated global file-name either in the containing program or in any program that directly or indirectly contains the containing program.

BLOCK CONTAINS clause

The BLOCK CONTAINS clause is syntax checked but has no effect on the execution of the program.

integer-1* , *integer-2

Must be nonzero unsigned integers. They specify:

CHARACTERS

Specifies the number of bytes required to store the physical record, no matter what USAGE the data items have within the data record.

If only *integer-2* is specified, it specifies the exact number of bytes in the physical record. When *integer-1* and *integer-2* are both specified, they represent the minimum and maximum number of bytes in the physical record, respectively.

integer-1 and *integer-2* must include any control bytes and padding contained in the physical record. (Logical records do not include padding.)

The CHARACTERS phrase is the default. CHARACTERS must be specified when:

- The physical record contains padding.
- Logical records are grouped so that an inaccurate physical record size could be implied. For example, suppose you describe a variable-length record of 100 bytes, yet each time you write a block of 4, one 50-byte record is written followed by three 100-byte records. If the RECORDS phrase were specified, the compiler would calculate the block size as 420 bytes instead of the actual size, 370 bytes. (This calculation includes block and record descriptors.)

RECORDS

Specifies the number of logical records contained in each physical record.

The compiler assumes that the block size must provide for *integer-2* records of maximum size, and provides any additional space needed for control bytes.

RECORD clause

When the RECORD clause is used, the record size must be specified as the number of bytes needed to store the record internally, regardless of the USAGE of the data items contained within the record.

For example, if you have a record with 10 DBCS characters, the RECORD clause should say `RECORD CONTAINS 20 CHARACTERS`. For a record with 10 national characters, the RECORD clause should say the same, `RECORD CONTAINS 20 CHARACTERS`.

The size of a record is determined according to the rules for obtaining the size of a group item. (See "USAGE clause" on page 216 and "SYNCHRONIZED clause" on page 209.)

When the RECORD clause is omitted, the compiler determines the record lengths from the record descriptions. When one of the entries within a record description contains an OCCURS DEPENDING ON clause, the compiler uses the maximum value of the variable-length item to calculate the number of bytes needed to store the record internally.

If the associated file connector is an external file connector, all file description entries in the run unit that are associated with that file connector must specify the same maximum number of bytes.

The following sections describe the formats of the RECORD clause:

Format 1

Format 1 specifies the number of bytes for fixed-length records.

Format 1

```
►► RECORD ──┬──────────┬── integer-3 ──┬──────────┬──►◄
            └─ CONTAINS ─┘               └─ CHARACTERS ─┘
```

integer-3

Must be an unsigned integer that specifies the number of bytes contained in each record in the file.

The RECORD CONTAINS 0 characters clause is syntax checked, but has no effect on the execution of the program.

Do not specify the RECORD CONTAINS 0 clause for an SD entry.

Format 2

Format 2 specifies the number of bytes for either fixed-length or variable-length records.

Fixed-length records are obtained when all 01 record description entry lengths are the same. The format-2 RECORD CONTAINS clause is never required, because the minimum and maximum record lengths are determined from the record description entries.

Format 2

```
►► RECORD ──┬──────────┬── integer-4 ── TO ── integer-5 ──┬──────────┬──►◄
            └─ CONTAINS ─┘                                  └─ CHARACTERS ─┘
```

integer-4* , *integer-5

Must be unsigned integers. *integer-4* specifies the size of the smallest data record, and *integer-5* specifies the size of the largest data record.

Format 3

Format 3 is used to specify variable-length records.

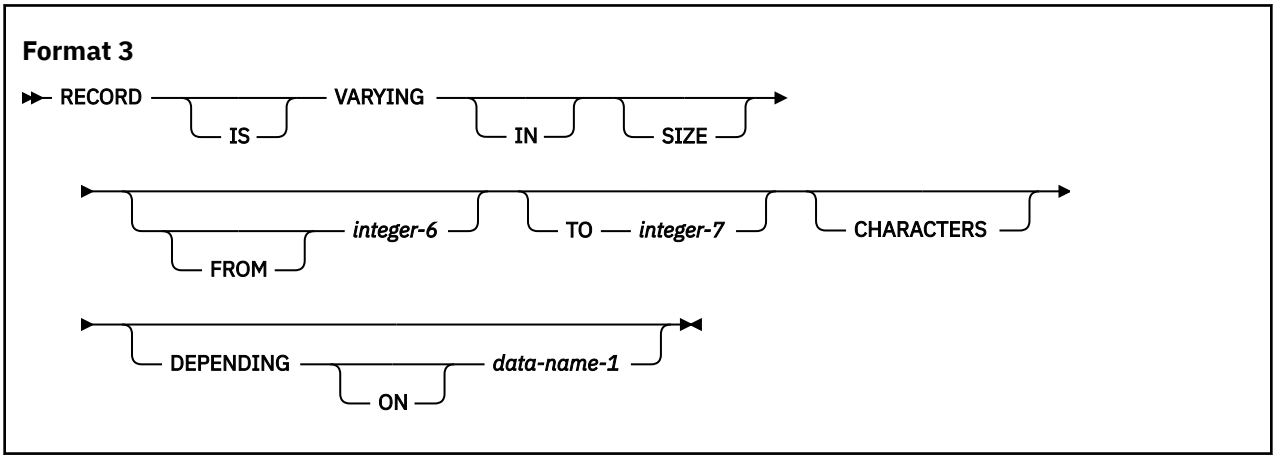

integer-6
Specifies the minimum number of bytes to be contained in any record of the file. If *integer-6* is not specified, the minimum number of bytes to be contained in any record of the file is equal to the least number of bytes described for a record in that file.

integer-7
Specifies the maximum number of bytes in any record of the file. If *integer-7* is not specified, the maximum number of bytes to be contained in any record of the file is equal to the greatest number of bytes described for a record in that file.

The number of bytes associated with a record description is determined by the sum of the number of bytes in all elementary data items (excluding redefinitions and renamings), plus any implicit FILLER due to synchronization. If a table is specified:

- The minimum number of table elements described in the record is used in the summation above to determine the minimum number of bytes associated with the record description.
- The maximum number of table elements described in the record is used in the summation above to determine the maximum number of bytes associated with the record description.

If *data-name-1* is specified:

- *data-name-1* must be an elementary unsigned integer.
- *data-name-1* cannot be a windowed date field.
- The number of bytes in the record must be placed into the data item referenced by *data-name-1* before any RELEASE, REWRITE, or WRITE statement is executed for the file.
- The execution of a DELETE, RELEASE, REWRITE, START, or WRITE statement or the unsuccessful execution of a READ or RETURN statement does not alter the content of the data item referenced by *data-name-1*.
- After the successful execution of a READ or RETURN statement for the file, the contents of the data item referenced by *data-name-1* indicate the number of bytes in the record just read.

During the execution of a RELEASE, REWRITE, or WRITE statement, the number of bytes in the record is determined by the following conditions:

- If *data-name-1* is specified, by the content of the data item referenced by *data-name-1*
- If *data-name-1* is not specified and the record does not contain a variable occurrence data item, by the number of bytes positions in the record
- If *data-name-1* is not specified and the record contains a variable occurrence data item, by the sum of the fixed position and that portion of the table described by the number of occurrences at the time of execution of the output statement

During the execution of a READ ... INTO or RETURN ... INTO statement, the number of bytes in the current record that participate as the sending data items in the implicit MOVE statement is determined by the following conditions:

- If *data-name-1* is specified, by the content of the data item referenced by *data-name-1*
- If *data-name-1* is not specified, by the value that would have been moved into the data item referenced by *data-name-1* had *data-name-1* been specified

LABEL RECORDS clause

The LABEL RECORDS clause is syntax checked, but has no effect on the execution of the program.

A warning message is issued if you use any of the following language elements:

- LABEL RECORD IS data-name
- USE ... AFTER ... LABEL PROCEDURE

The LABEL RECORDS clause indicates the presence or absence of labels. If it is not specified for a file, label records for that file must conform to the system label specifications.

STANDARD
Labels conforming to system specifications exist for this file.

STANDARD is permitted for mass storage devices and tape devices.

OMITTED
No labels exist for this file.

OMITTED is permitted for tape devices.

data-name-2
User labels are present in addition to standard labels. *data-name-2* specifies the name of a user label record. *data-name-2* must appear as the subject of a record description entry associated with the file.

VALUE OF clause

The VALUE OF clause describes an item in the label records associated with the file.

data-name-3
Should be qualified when necessary, but cannot be subscripted. It must be described in the WORKING-STORAGE SECTION. It cannot be described with the USAGE IS INDEX clause.

literal-1
Can be numeric or alphanumeric, or a figurative constant of category numeric or alphanumeric. Cannot be a floating-point literal.

The VALUE OF clause is syntax checked, but has no effect on the execution of the program.

DATA RECORDS clause

The DATA RECORDS clause is syntax checked but serves only as documentation for the names of data records associated with the file.

data-name-4
The names of record description entries associated with the file. *data-name-4* must not be a type-name.

The data-name need not have an associated 01 level number record description with the same name.

LINAGE clause

The LINAGE clause specifies the depth of a logical page in number of lines. Optionally, it also specifies the line number at which the footing area begins and the top and bottom margins of the logical page. (The logical page and the physical page cannot be the same size.)

The LINAGE clause is effective for sequential files opened as OUTPUT or EXTEND.

All integers must be unsigned. All data-names must be described as unsigned integer data items.

data-name-5 , integer-8
The number of lines that can be written or spaced on this logical page. The area of the page that these lines represent is called the *page body*. The value must be greater than zero.

WITH FOOTING AT
integer-9 or the value of the data item in *data-name-6* specifies the first line number of the footing area within the page body. The footing line number must be greater than zero, and not greater than the last line of the page body. The footing area extends between those two lines.

LINES AT TOP
integer-10 or the value of the data item in *data-name-7* specifies the number of lines in the top margin of the logical page. The value can be zero.

LINES AT BOTTOM
integer-11 or the value of the data item in *data-name-8* specifies the number of lines in the bottom margin of the logical page. The value can be zero.

The following figure illustrates the use of each phrase of the LINAGE clause.

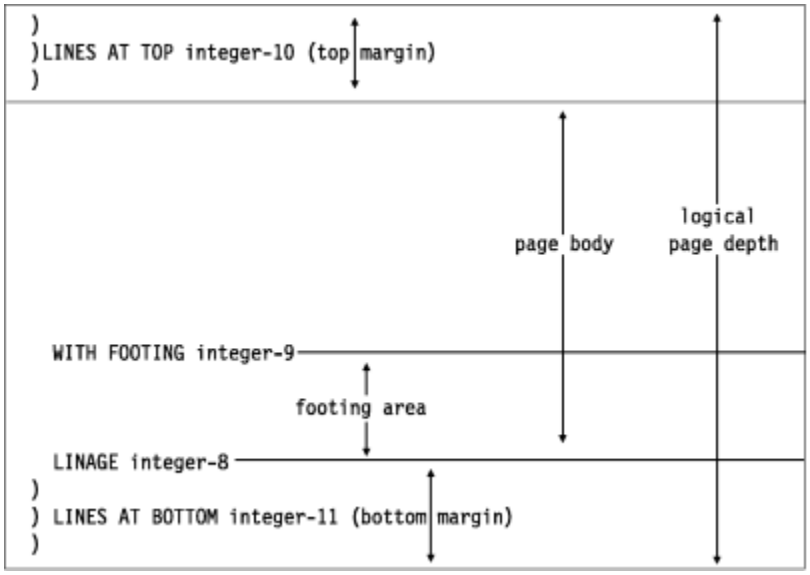

The logical page size specified in the LINAGE clause is the sum of all values specified in each phrase except the FOOTING phrase. If the LINES AT TOP phrase is omitted, the assumed value for the top margin is zero. Similarly, if the LINES AT BOTTOM phrase is omitted, the assumed value for the bottom margin is zero. Each logical page immediately follows the preceding logical page, with no additional spacing provided.

If the FOOTING phrase is omitted, its assumed value is equal to that of the page body (*integer-8* or *data-name-5*).

At the time an OPEN OUTPUT statement is executed, the values of *integer-8*, *integer-9*, *integer-10*, and *integer-11*, if specified, are used to determine the page body, first footing line, top margin, and bottom margin of the logical page for this file. (See the figure above.) These values are then used for all logical pages printed for this file during a given execution of the program.

At the time an OPEN statement with the OUTPUT phrase is executed for the file, *data-name-5*, *data-name-6*, *data-name-7*, and *data-name-8* determine the page body, first footing line, top margin, and bottom margin for the first logical page only.

At the time a WRITE statement with the ADVANCING PAGE phrase is executed or a page overflow condition occurs, the values of *data-name-5*, *data-name-6*, *data-name-7*, and *data-name-8* if specified, are used to determine the page body, first footing line, top margin, and bottom margin for the next logical page.

If an external file connector is associated with this file description entry, all file description entries in the run unit that are associated with this file connector must have:

- A LINAGE clause, if any file description entry has a LINAGE clause
- The same corresponding values for *integer-8*, *integer-9*, *integer-10*, and *integer-11*, if specified
- The same corresponding external data items referenced by *data-name-5*, *data-name-6*, *data-name-7*, and *data-name-8*

See "ADVANCING phrase" on page 403 for the behavior of carriage control characters in external files.

A LINAGE clause under an SD is syntax checked, but has no effect on the execution of the program.

LINAGE-COUNTER special register

For information about the LINAGE-COUNTER special register, see "LINAGE-COUNTER" on page 21.

RECORDING MODE clause

The RECORDING MODE clause for record sequential files is treated as follows.

F
Record descriptions are validated as fixed. Do not specify RECORDING MODE F if the record descriptions are variable.

V
Variable-length record format is assumed (even if the record descriptions are fixed).

U
Syntax checked, but has no effect on the execution of the program.

S

- For non-QSAM files, treated the same as V.
- For QSAM files, the records can be either fixed-length or variable-length, and can be larger than a block. If a record is larger than the remaining space in a block, a segment of the record is written to fill the block. The remainder of the record is stored in the next block (or blocks, if required). Only complete records are made available to you. Each segment of a record in a block, even if it is the entire record, includes a segment-descriptor field, and each block includes a block-descriptor field. These fields are not described in the DATA DIVISION; provision is automatically made for them. These fields are not available to you.

CODE-SET clause

The CODE-SET clause is syntax checked, but has no effect on the execution of the program.

Chapter 18. Data description entry

A *data description entry* specifies the characteristics of a data item. In the sections that follow, sets of data description entries are called *record description entries*. The term *data description entry* refers to data and record description entries.

Data description entries that define independent data items do not make up a record. These entries are known as *data item description entries*.

Data description entries have three general formats, and all data description entries must end with a separator period.

Format 1

Format 1 is used for data description entries in all DATA DIVISION sections.

Format 1: data description entry

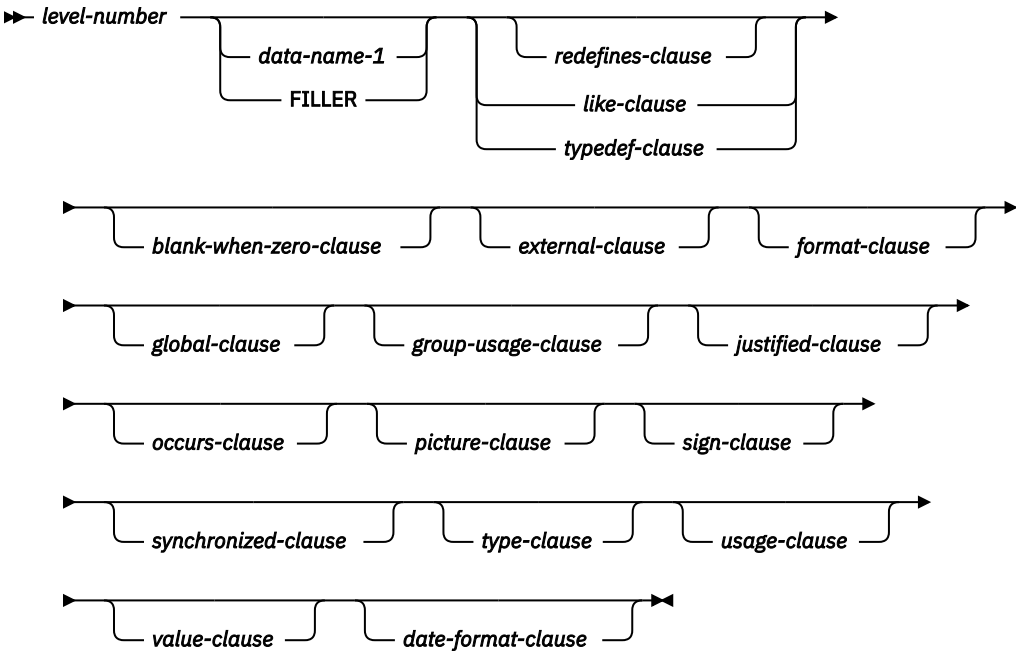

The clauses can be written in any order, with the following exceptions:

- *data-name-1* or FILLER, if specified, must immediately follow the level-number.
- When the REDEFINES clause is specified, it must immediately follow *data-name-1* or FILLER, if either is specified. If *data-name-1* or FILLER is not specified, the REDEFINES clause must immediately follow the level-number.
- When the TYPEDEF clause is specified, it must be the first entry following *data-name-1*. The TYPEDEF clause cannot be specified with FILLER. The TYPEDEF clause and the REDEFINES clause cannot both be specified for *data-name-1*.

The level-number in format 1 can be any number in the range 01–49, or 77.

A space, a comma, or a semicolon must separate clauses.

© Copyright IBM Corp. 2021, 2025

Format 2

Format 2 regroups previously defined items.

Format 2: renames

```
►► 66 ── data-name-1 ── renames-clause. ►◄
```

A level-66 entry cannot rename another level-66 entry, nor can it rename a level-01, level-77, or level-88 entry.

All level-66 entries associated with one record must immediately follow the last data description entry in that record.

See “RENAMES clause” on page 206 for further details.

Format 3

Format 3 describes condition-names.

Format 3: condition-name

```
►► 88 ── condition-name-1 ── value-clause. ►◄
```

condition-name-1

A user-specified name that associates a value, a set of values, or a range of values with a conditional variable.

Level-88 entries must immediately follow the data description entry for the conditional variable with which the condition-names are associated.

Format 3 can be used to describe elementary items, national group items, or alphanumeric group items. Additional information about condition-name entries can be found under “VALUE clause” on page 223 and “Condition-name condition” on page 242.

Format 4

This format describes boolean data. Boolean data items are items that are limited to a value of 1 or 0.

Note: When you use indicators in a COBOL program, you must describe them as boolean data items using the data description entry for boolean data.

Format 4: boolean data

```
level-number ┬─ data-name-1 ─┬─┬─ REDEFINES ── data-name-2 ─┬
             └─ FILLER [1] ──┘ │ LIKE ── data-name-3 ──────│
                               │ ┌─ IS ─┬─ TYPEDEF ─────────│
                               │ │      │                   │
                               │ │      │                   │
                               │ │      │                   │
```

Format 5

Format 5 describes constant-names. Constant-name can only be described as a level-01 entry.

Format 5: constant-name

```
►► 1 ─┬─ constant-name-1 ── CONSTANT ──┬──────────────┬─────────────►
      └─ 01 ─┘                         └─┬─────────┬─┘
                                          └─ IS ─┘  └─ GLOBAL ─┘

►── AS ──┬──────────────── literal-1 ────────────┬──►◄
         └─ LENGTH ── OF ── data-name-2 ─┘
```

The CONSTANT clause is used to associate a constant name with a literal. The constant name can then be used in place of a literal. The CONSTANT clause can only be specified for level-01 entries for elementary constant name. The CONSTANT clause can also be defined as another previously defined constant name.

A constant name needs to be defined in a CONSTANT clause before its use. It can be used in DATA DIVISION and PROCEDURE DIVISION where literal or integer is allowed, except in the compiler-directing statements, such as COPY statement and TITLE statement.

constant-name-1 may be used anywhere that a format specifies a literal of the class and category of *constant-name-1*. The class and category of *constant-name-1* is the same as that of *literal-1* or is an integer if LENGTH OF phrase is specified. If *constant-name-1* is an integer, it may also be used to specify repetition in a picture string.

Literal-1 cannot be a figurative constant.

If the LENGTH OF phrase is specified, the value of *constant-name-1* is determined as specified in the LENGTH intrinsic function with the exception that when *data-name-2* is a variable-length data item described with the OCCURS DEPENDING ON clause, the maximum size of the data item is used.

Level-numbers

The level-number specifies the hierarchy of data within a record, and identifies special-purpose data entries. A level-number begins a data description entry, a renamed or redefined item, or a condition-name entry.

A level-number has an integer value between 1 and 49, inclusive, or one of the special level-number values 66, 77, or 88.

Format

```
►► level-number ──┬──────────────┬──►◄
                  └─ data-name-1 ─┘
                  └─ FILLER ──────┘
```

level-number

01 and 77 must begin in Area A and be followed either by a separator period or by a space followed by its associated data-name, FILLER, or appropriate data description clause.

Level numbers 02 through 49 can begin in Areas A or B and must be followed by a space or a separator period.

Level numbers 66 and 88 can begin in Areas A or B and must be followed by a space.

Single-digit level-numbers 1 through 9 can be substituted for level-numbers 01 through 09.

Successive data description entries can start in the same column as the first entry or can be indented according to the level-number. Indentation does not affect the magnitude of a level-number.

When level-numbers are indented, each new level-number can begin any number of spaces to the right of Area A. The extent of indentation to the right is limited only by the width of Area B.

For more information, see "Levels of data" on page 138.

data-name-1
Explicitly identifies the data being described.

data-name-1, if specified, identifies a data item used in the program. *data-name-1* must be the first word following the level-number.

The data item can be changed during program execution.

data-name-1 must be specified for level-66 and level-88 items. It must also be specified for any entry containing the GLOBAL or EXTERNAL clause, and for record description entries associated with file description entries that have the GLOBAL or EXTERNAL clauses.

FILLER
A data item that is not explicitly referred to in a program. The keyword FILLER is optional. If specified, FILLER must be the first word following the level-number.

The keyword FILLER can be used with a conditional variable if explicit reference is never made to the conditional variable but only to values that it can assume. FILLER cannot be used with a condition-name.

In a MOVE CORRESPONDING statement or in an ADD CORRESPONDING or SUBTRACT CORRESPONDING statement, FILLER items are ignored.

In an INITIALIZE statement:

- When the FILLER phrase is not specified, elementary FILLER items are ignored.
- When the FILLER phrase is specified, the receiving elementary data items that have an explicit or implicit FILLER clause will be initialized.

If *data-name-1* or the FILLER clause is omitted, the data item being described is treated as though FILLER had been specified.

BLANK WHEN ZERO clause

The BLANK WHEN ZERO clause specifies that an item contains only spaces when its value is zero.

Format

```
►► BLANK ──┬──────────┬──┬─ ZERO  ─┬──►◄
           └─ WHEN ───┘  ├─ ZEROS ─┤
                         └─ ZEROES ─┘
```

The BLANK WHEN ZERO clause may be specified only for an elementary item described by its picture character string as category numeric-edited or numeric, without the picture symbol S or *. These items must be described, either implicitly or explicitly, as USAGE DISPLAY or USAGE NATIONAL.

A BLANK WHEN ZERO clause that is specified for an item defined as numeric by its picture character string defines the item as category numeric-edited.

The BLANK WHEN ZERO clause must not be specified for date fields.

DATE FORMAT clause

The DATE FORMAT clause specifies that a data item is a windowed or expanded date field.

Windowed date fields
Contain a windowed (two-digit) year, specified by a DATE FORMAT clause that contains YY.

Expanded date fields
Contain an expanded (four-digit) year, specified by a DATE FORMAT clause that contains YYYY.

If the NODATEPROC compiler option is in effect, the DATE FORMAT clause is syntax checked but has no effect on the execution of the program. NODATEPROC disables date processing. The rules and restrictions described in this reference for the DATE FORMAT clause and date fields apply only if the DATEPROC compiler option is in effect.

The DATE FORMAT clause must not be specified for a data item described with USAGE NATIONAL.

Format

```
►►─ DATE FORMAT ──┬──────┬── date-pattern ─►◄
                  └─ IS ─┘
```

date-pattern is a character string, such as YYXXXX, that represents a windowed or expanded year optionally followed or preceded by one to four characters representing other parts of a date such as the month and day:

Date-pattern string	Specifies that the data item contains
YY	A windowed (two-digit) year
YYYY	An expanded (four-digit) year
X	A single character; for example, a digit representing a semester or quarter (1–4)
XX	Two characters; for example, digits representing a month (01–12)
XXX	Three characters; for example, digits representing a day of the year (001–366)
XXXX	Four characters; for example, two digits representing a month (01–12) and two digits representing a day of the month (01–31)

For an introduction to date fields and related terms, see Chapter 10, “Millennium Language Extensions and date fields,” on page 73. For details on using date fields in applications, see *Millennium language extensions (MLE)* in the *COBOL for Linux on x86 Programming Guide*.

Semantics of windowed date fields

Windowed date fields undergo automatic expansion relative to the century window when they are used as operands in arithmetic expressions or arithmetic statements. However, the result of incrementing or decrementing a windowed date is still treated as a windowed date for further computation, comparison, and storing.

When used in the following situations, windowed date fields are treated as if they were converted to expanded date format:

- Operands in subtractions in which the other operand is an expanded date
- Operands in relation conditions
- Sending fields in arithmetic or MOVE statements

The details of the conversion to expanded date format depend on whether the windowed date field is numeric or alphanumeric.

Given a century window starting year of 19*nn*, the year part (*yy*) of a numeric windowed date field is treated as if it were expanded as follows:

- If *yy* is less than *nn*, then add 2000 to *yy*.
- If *yy* is equal to or greater than *nn*, then add 1900 to *yy*.

For signed numeric windowed date fields, this means that there can be two representations of some years. For instance, windowed year values 99 and -01 are both treated as 1999, since 1900 + 99 = 2000 + -01.

Alphanumeric windowed date fields are treated in a similar manner, but use a prefix of 19 or 20 instead of adding 1900 or 2000.

For example, when used as an operand of a relation condition, a windowed date field defined by:

```
01  DATE-FIELD  DATE FORMAT YYXXXX PICTURE 9(6)
                VALUE IS 450101.
```

is treated as if it were an expanded date field with a value of:

- 19450101, if the century window starting year is 1945 or earlier
- 20450101, if the century window starting year is later than 1945

Restrictions on using date fields

There are several restrictions on using date fields in different contexts.

The contexts are:

- Combining the DATE FORMAT clause with other clauses
- Group items that are date fields
- Language elements that treat date fields as nondates
- Language elements that do not accept windowed date fields as arguments
- Language elements that do not accept date fields as arguments

For restrictions on using date fields in other contexts, see:

- “Arithmetic with date fields” on page 237
- “Comparison of date fields” on page 253
- “ADD statement” on page 283
- “SUBTRACT statement” on page 392
- “MOVE statement” on page 329

Combining the DATE FORMAT clause with other clauses

There are restrictions on combining the DATE FORMAT clause with other clauses.

The following phrases are the only phrases of the USAGE clause that can be combined with the DATE FORMAT clause:

- BINARY
- COMPUTATIONAL[1]
- COMPUTATIONAL-3
- COMPUTATIONAL-4
- DISPLAY
- PACKED-DECIMAL

[1]USAGE COMPUTATIONAL cannot be combined with the DATE FORMAT clause if the TRUNC(BIN) compiler option is in effect.

The PICTURE character-string must specify the same number of characters or digits as the DATE FORMAT clause. For alphanumeric date fields, the only PICTURE character-string symbols allowed are A, 9, and X, with at least one X. For numeric date fields, the only PICTURE character-string symbols allowed are 9 and S.

The following clauses are not allowed for a data item defined with DATE FORMAT:

- BLANK WHEN ZERO
- JUSTIFIED
- SEPARATE CHARACTER phrase of the SIGN clause

The EXTERNAL clause is not allowed for a windowed date field or a group item that contains a windowed date field subordinate item.

Some restrictions apply when combining the following clauses with DATE FORMAT:

- "REDEFINES clause" on page 203
- "VALUE clause" on page 223

Group items that are date fields

If a group item is defined with a DATE FORMAT clause, certain restrictions apply.

The restrictions are:

- The elementary items in the group must all be USAGE DISPLAY.
- The length of the group item must be the same number of characters as the *date-pattern* in the DATE FORMAT clause.
- If the group consists solely of a date field with USAGE DISPLAY, and both the group and the single subordinate item have DATE FORMAT clauses, then the DATE FORMAT clauses must be identical.
- If the group item contains subordinate items that subdivide the group, then the following restrictions apply:
  - If a named (not FILLER) subordinate item consists of exactly the year part of the group item date field and has a DATE FORMAT clause, then the DATE FORMAT clause must be YY or YYYY with the same number of year characters as the group item.
  - If the group item is a Gregorian date with a DATE FORMAT clause of YYXXXX, YYYYXXXX, XXXXYY, or XXXXYYYY, and a named subordinate date data item consists of the year and month part of the Gregorian date, then its DATE FORMAT clause must be YYXX, YYYYXX, XXYY, or XXYYYY, respectively (or, for a group date format of YYYYXXXX, a subordinate date format of YYXX as described below).
  - A windowed date field can be subordinate to an expanded date field group item if the subordinate item starts two characters after the group item, neither date is in year-last format, and the date format of the subordinate item either has no Xs or has the same number of Xs following the Ys as the group item, or is YYXX under a group date format of YYYYXXXX.
  - The only subordinate items that can have a DATE FORMAT clause are those that define the year part of the group item, the windowed part of an expanded date field group item, or the year and month part of a Gregorian date group item, as discussed in the above restrictions.

  The following example defines a valid group item:

```
01  YYMMDD     DATE FORMAT YYXXXX.
    02  YYMM   DATE FORMAT YYXX.
        03  YY DATE FORMAT YY PICTURE 99.
        03                    PICTURE 99.
    02  DD                    PICTURE 99.
```

Language elements that treat date fields as nondates

If date fields are used in the following language elements, they are treated as nondates. That is, the DATE FORMAT is ignored, and the content of the date data item is used without undergoing automatic expansion.

- In the environment division file-control paragraph:
  - SELECT ... ASSIGN USING data-name
  - SELECT ... PASSWORD IS data-name
  - SELECT ... FILE STATUS IS data-name
- In data division entries:
  - LABEL RECORD IS data-name
  - LABEL RECORDS ARE data-name
  - LINAGE IS data-name FOOTING data-name TOP data-name BOTTOM data-name
- In class conditions
- In sign conditions
- In DISPLAY statements

Language elements that do not accept windowed date fields as arguments

There are restrictions on using windowed date fields as arguments.

Windowed date fields cannot be used as:

- A data-name in the following formats of the environment division file-control paragraph:
  - SELECT ... RECORD KEY IS
  - SELECT ... ALTERNATE RECORD KEY IS
  - SELECT ... RELATIVE KEY IS
- A data-name in the RECORD IS VARYING DEPENDING ON clause of a data division file description (FD) or sort description (SD) entry
- The object of an OCCURS DEPENDING ON clause of a data division data definition entry
- The key in an ASCENDING KEY or DESCENDING KEY phrase of an OCCURS clause of a data division data definition entry
- Any data-name or identifier in the following statements:
  - CANCEL
  - GO TO ... DEPENDING ON
  - INSPECT
  - SET
  - SORT
  - STRING
  - UNSTRING
- In the CALL statement, as the identifier containing the program-name
- Identifiers in the TIMES and VARYING phrases of the PERFORM statement (windowed date fields *are* allowed in the PERFORM conditions)
- An identifier in the VARYING phrase of a serial (format-1) SEARCH statement, or any identifier in a binary (format-2) SEARCH statement (windowed date fields *are* allowed in the SEARCH conditions)
- An identifier in the ADVANCING phrase of the WRITE statement
- Arguments to intrinsic functions, except the UNDATE intrinsic function

Windowed date fields cannot be used as ascending or descending keys in MERGE or SORT statements.

Language elements that do not accept date fields as arguments

There are restrictions on using windowed date fields and expanded date fields.

Neither windowed date fields nor expanded date fields can be used:

- In the DIVIDE statement, except as an identifier in the GIVING or REMAINDER clause
- In the MULTIPLY statement, except as an identifier in the GIVING clause

(Date fields cannot be used as operands in division or multiplication.)

EXTERNAL clause

The EXTERNAL clause specifies that the storage associated with a data item is associated with the run unit rather than with any particular program within the run unit.

An external data item can be referenced by any program in the run unit that describes the data item. References to an external data item from different programs using separate descriptions of the data item are always to the same data item. In a run unit, there is only one representative of an external data item.

The EXTERNAL clause can be specified only on data description entries whose level-number is 01. It can be specified only on data description entries that are in the WORKING-STORAGE SECTION of a program. It cannot be specified in LINKAGE SECTION, LOCAL-STORAGE SECTION, or FILE SECTION data description entries. Any data item described by a data description entry subordinate to an entry that describes an external record also attains the external attribute. Indexes in an external data record do not possess the external attribute.

The data contained in the record named by the data-name clause is external and can be accessed and processed by any program in the run unit that describes and, optionally, redefines it. This data is subject to the following rules:

- If two or more programs within a run unit describe the same external data record, each record-name of the associated record description entries must be the same, and the records must define the same number of bytes. However, a program that describes an external record can contain a data description entry including the REDEFINES clause that redefines the complete external record, and this complete redefinition need not occur identically in other programs in the run unit.
- Use of the EXTERNAL clause does not imply that the associated data-name is a global name.

FORMAT clause

The FORMAT clause specifies the general characteristics and editing requirements of an elementary date, time, or timestamp item.

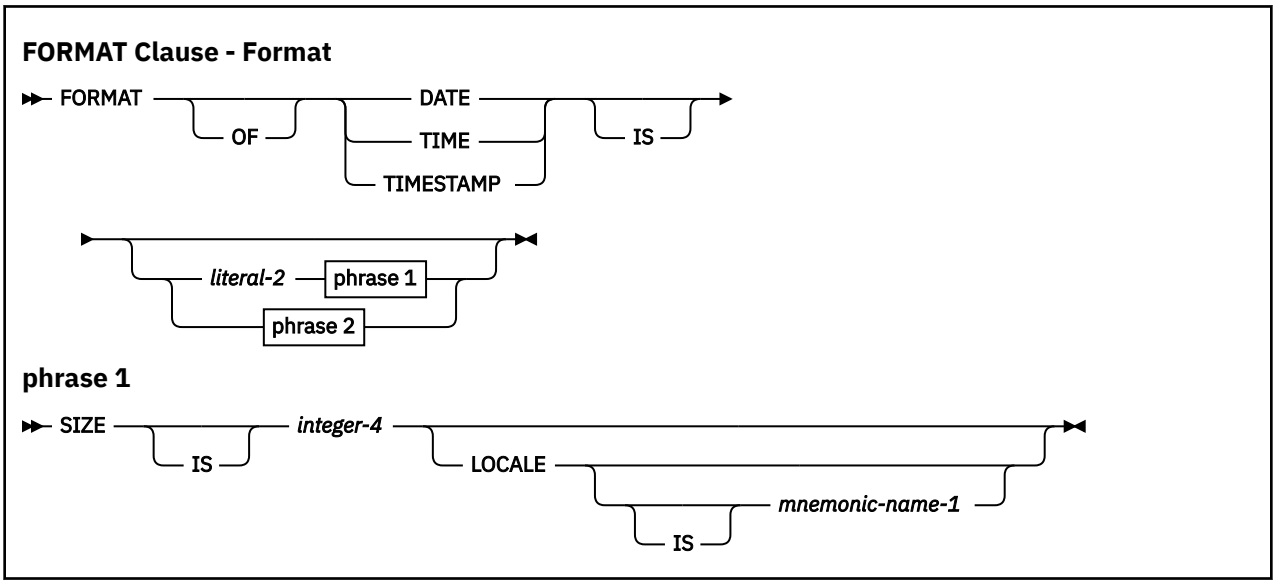

phrase 2

```
►► SIZE ──┬──────┬── integer-5 ── LOCALE ──┬──────┬──────────────┬──┬──►◄
          └─ IS ─┘                        └─ IS ─┘ mnemonic-name-2 └──┘
```

The FORMAT clause must be specified for every elementary date, time, or timestamp item, except the subject of a RENAMES clause.

If the SIZE phrase is not specified for a timestamp item, the size defaults to 26. If it is specified, it must have a value of 19, or a value between 21 and 32.

literal-2 and the LOCALE phrase cannot be specified for a timestamp item. A timestamp has a fixed format, which is dependent on the size of the timestamp item.

- When the SIZE phrase is not specified, the format is equivalent to a *literal-2* value of "@Y-%m-%d-%H.%M.%S.@Sm".
- When the SIZE phrase is specified with a value of 19, the format is equivalent to a *literal-2* value of "@Y-%m-%d-%H.%M.%S".
- When the SIZE phrase is specified as a value between 21 and 32, the format is equivalent to a *literal-2* value of "@Y-%m-%d-%H.%M.%S." followed by the fractional seconds in the timestamp. For example, a timestamp with size 25 could have the value "2014-01-23-01.02.03.12345".

If *literal-2* or the LOCALE phrase is not specified for a date or time item, the format of the item is determined from the SPECIAL-NAMES FORMAT clause.

A data item of class date-time cannot be reference modified.

When the FORMAT clause is specified, the following clauses cannot be specified:

- PICTURE clause.
- SIGN clause.
- BLANK WHEN ZERO clause.
- JUSTIFIED clause.
- LIKE clause. A LIKE clause can, however, be used to define the FORMAT of a data item. You cannot change the size of a date, time, or timestamp item with a LIKE clause. When a LIKE clause is referring to a date, time, or timestamp item, a comment is generated with the appropriate FORMAT clause information that is inherited
- TYPE clause.

The following general rules apply:

- A condition-name can be associated with a date-time item. The VALUE clause of the condition-name can be specified with a THRU phrase.
- A SYNCHRONIZED clause is treated as documentation.
- The OCCURS, REDEFINES, and RENAMES clauses can be associated with date, time, or timestamp items.
- If a LIKE clause is specified, a FORMAT clause cannot be specified.
- Any associated VALUE clause must specify a non-numeric literal. The literal is treated exactly as specified; no formatting is done.

literal-2

Specifies the format of a date or time item. *literal-2* must be a non-numeric literal, at least 2 characters long. The contents of *literal-2* is made up of separators and conversion specifiers. For a list of valid conversion specifiers, see the *Conversion specifiers that can be used in literal-8* table. For further rules on the contents of *literal-2*, see the description of the FORMAT clause used in the SPECIAL-NAMES paragraph in “FORMAT clause” on page 102.

SIZE phrase

This section describes the parameters that you specify for this SIZE phrase.

For a more detailed description of the SIZE phrase, refer to "SIZE phrase" on page 104.

integer-3*, *integer-4
integer-3 and *integer-4* determine the size of the date or time item in number of digits. *integer-3* or *integer-4* must be specified if the size of the date or time item cannot be determined at compile time. For a date or time item, the values of both *integer-3* and *integer-4* must be equal to or greater than 4.

mnemonic-name-1*, *mnemonic-name-2
For more information about *mnemonic-name-1* or *mnemonic-name-2*, refer to the description in "LOCALE phrase" on page 172 and "LOCALE phrase" on page 104.

USAGE for a class date-time item

If no USAGE clause is specified for an item of class date-time, USAGE DISPLAY is assumed.

A USAGE of DISPLAY or PACKED-DECIMAL (COMP-3) can be explicitly specified for a date-time item. A USAGE of PACKED-DECIMAL can be specified for an item of class date-time, if *literal-2* contains only conversion specifiers, and those specifiers will result in numeric digits.

FORMAT clause and PICTURE clause similarities

A FORMAT clause defines an implicit PICTURE clause.

Although there is no PICTURE character-string that can easily describe a date or time item, for some formats, an approximate definition does exist. For example, a date item with a FORMAT '%y,%m,%d' is similar to the PICTURE 99/99/99, where the '/' PICTURE symbol is replaced with a ',.

LOCALE phrase

The LOCALE phrase specifies the culturally-appropriate format of the date, time, or timestamp item.

When the LOCALE phrase is specified, without *literal-2*, the format and separator used for the date and time items is completely based on the locale.

When the LOCALE phrase is specified with *literal-2*, *literal-2* determines the format of the item, but the conversion specifications are replaced with items based on the locale.

mnemonic-name-1*, *mnemonic-name-2
If a mnemonic-name is specified, the locale used for the date or time item is one associated with the mnemonic-name in the LOCALE clause of the SPECIAL-NAMES paragraph. If a mnemonic-name is not specified, the current locale is used. For more information about how to determine the current locale, refer to *CEELOCT: get current local date or time* in the *COBOL for Linux on x86 Programming Guide*.

GLOBAL clause

The GLOBAL clause specifies that a data-name or a constant-name is available to every program contained within the program that defines it, as long as the contained program does not itself have a definition for that name. All data-names or constant-names subordinate to or condition-names or indexes associated with a global name are global names.

A data-name or a constant-name is global if the GLOBAL clause is specified either in the data description entry by which the data-name or the constant-name is defined or in another entry to which that data description entry is subordinate. The GLOBAL clause can be specified in the WORKING-STORAGE SECTION, the FILE SECTION, the LINKAGE SECTION, and the LOCAL-STORAGE SECTION, but only in data description entries whose level-number is 01.

In the same DATA DIVISION, the data description entries for any two data items for which the same data-name or constant-name is specified must not include the GLOBAL clause.

A statement in a program contained directly or indirectly within a program that describes a global name can reference that name without describing it again.

If the TYPEDEF clause is specified with the GLOBAL clause, the scope of the GLOBAL clause applies to the type-name, and to any data items subordinate to the type-name. The global attribute is not acquired by a data item that is defined by using a global type-name within a TYPE clause.

Two programs in a run unit can reference common data in the following circumstances:

- The data content of an external data record can be referenced from any program that describes the data record as external.
- If a program is contained within another program, both programs can refer to data that possesses the global attribute either in the containing program or in any program that directly or indirectly contains the containing program.

GROUP-USAGE clause

A GROUP-USAGE clause with the NATIONAL phrase specifies that the group item defined by the entry is a national group item. A national group item contains national characters in all subordinate data items and subordinate group items.

Format

```
►► GROUP-USAGE ──┬──────┬── NATIONAL ──►◄
                 └─ IS ─┘
```

When GROUP-USAGE NATIONAL is specified:

- The subject of the entry is a national group item. The class and category of a national group are national.
- A USAGE clause must not be specified for the subject of the entry. A USAGE NATIONAL clause is implied.
- A USAGE NATIONAL clause is implied for any subordinate elementary data items that are not described with a USAGE NATIONAL clause.
- All subordinate elementary data items must be explicitly or implicitly described with USAGE NATIONAL.
- Any signed numeric data items must be described with the SIGN IS SEPARATE clause.
- A GROUP-USAGE NATIONAL clause is implied for any subordinate group items that are not described with a GROUP-USAGE NATIONAL clause.
- All subordinate group items must be explicitly or implicitly described with a GROUP-USAGE NATIONAL clause.
- The JUSTIFIED clause must not be specified.

Unless stated otherwise, a national group item is processed as though it were an elementary data item of usage national, class and category national, described with PICTURE N(*m*), where *m* is the length of the group in national character positions.

Usage note: When you use national groups, the compiler can ensure proper truncation and padding of group items for statements such as MOVE and INSPECT. Groups defined without a GROUP-USAGE NATIONAL clause are alphanumeric groups. The content of alphanumeric groups, including any national characters, is treated as alphanumeric data, possibly leading to invalid truncation or mishandling of national character data.

The table below summarizes the cases where a national group item is processed as a group item.

Table 15. ***Where national group items are processed as groups***	
Language feature	**Processing of national group items**
Name qualification	The name of a national group item can be used to qualify the names of elementary data items and subordinate group items in the national group. The rules of qualification for a national group are the same as the rules of qualification for an alphanumeric group.
RENAMES clause	The rules for a national group item specified in the THROUGH phrase are the same as the rules for an alphanumeric group item specified in the THROUGH phrase. The result is an alphanumeric group item.
CORRESPONDING phrase	A national group item is processed as a group in accordance with the rules of the CORRESPONDING phrase. Elementary data items within a national group are processed the same as they would be if defined within an alphanumeric group.
INITIALIZE statement	A national group item is processed as a group in accordance with the rules of the INITIALIZE statement. Elementary items within the national group are initialized the same as they would be if defined within an alphanumeric group.
XML GENERATE statement	A national group item specified in the FROM phrase is processed as a group in accordance with the rules of the XML GENERATE statement. Elementary items within the national group are processed the same as they would be if defined within an alphanumeric group.

JUSTIFIED clause

The JUSTIFIED clause overrides standard positioning rules for receiving items of category alphabetic, alphanumeric, DBCS, or national.

Format

```
►►─┬─ JUSTIFIED ─┬──────────┬─►◄
   └─ JUST ──────┘          └─ RIGHT ─┘
```

You can specify the JUSTIFIED clause only at the elementary level. JUST is an abbreviation for JUSTIFIED, and has the same meaning.

You cannot specify the JUSTIFIED clause:

- For data items of category numeric, numeric-edited, alphanumeric-edited, or national-edited
- For edited DBCS items
- For index data items
- For items described as USAGE FUNCTION-POINTER, USAGE POINTER, or USAGE PROCEDURE-POINTER
- For external floating-point or internal floating-point items
- For date fields
- With level-66 (RENAMES) and level-88 (condition-name) entries
- For items with the TYPE clause

When the JUSTIFIED clause is specified for a receiving item, the data is aligned at the rightmost character position in the receiving item. Also:

- If the sending item is larger than the receiving item, the leftmost character positions are truncated.

- If the sending item is smaller than the receiving item, the unused character positions at the left are filled with spaces. For a DBCS item, each unused position is filled with a DBCS space; for an item described with usage NATIONAL, each unused position is filled with the default Unicode space (NX'2000'); otherwise, each unused position is filled with an alphanumeric space.

If you omit the JUSTIFIED clause, the rules for standard alignment are followed (see "Alignment rules" on page 146).

The JUSTIFIED clause does not affect initial settings as determined by the VALUE clause.

LIKE Clause

The LIKE clause allows you to define the PICTURE, USAGE, SIGN, and FORMAT characteristics of a data item by copying them from a previously defined data item. It also allows you to make the length of the data item you define different from the length of the original item.

Format

```
►► LIKE ── data-name-1 ──┬──────────────────┬──►◄
                         └─ ( ── integer ── ) ─┘
```

data-name-1
Can refer to an elementary item, a group item, an index-name, or a type-name. The item referred to by *data-name-1* is known as the *object* of the LIKE clause.

integer
Specifies the difference in length between the new and existing items.

It can be signed.

If a blank or a + precedes the integer, the new item is longer. If a - precedes the integer, the new item is shorter.

You cannot use the integer option to:

- Change the length of an edited item
- Change the length of an index, pointer, or procedure-pointer item
- Change the number of decimal places in a data item
- Change the length of an internal or external floating-point data item
- Change the length of a date, time, or timestamp item

Note: An item whose attributes include BLANK WHEN ZERO is treated as an edited item.

The LIKE clause causes the new data item to inherit specific characteristics from the existing data item. These characteristics are the PICTURE, USAGE, SIGN, BLANK WHEN ZERO, and FORMAT attributes of the existing item.

The compiler generates comments to identify the characteristics of the new item. These comments appear after the statement containing the LIKE clause.

Note that the default USAGE IS DISPLAY and SIGN IS TRAILING characteristics do not print as comments.

The FORMAT characteristics that can be inherited include:

- The category of the item: date, time, or timestamp
- A FORMAT literal
- A SIZE phrase and LOCALE phrase.

For more information about the FORMAT clause, refer to "FORMAT clause" on page 170.

Comments generated based on inherited USAGE characteristics

The different USAGE clauses that you can specify for the original item result in a limited number of comments.

Table 16. Comments Generated based on Inherited USAGE Characteristics

Inherited USAGE Clause	Generated Comment
PACKED-DECIMAL COMPUTATIONAL COMPUTATIONAL-3	* USAGE IS PACKED-DECIMAL
COMP-1 COMUTATIONAL-1	* USAGE IS COMPUTATIONAL-1
COMP-2 COMUTATIONAL-2	* USAGE IS COMPUTATIONAL-2
BINARY COMP-4 COMPUTATIONAL-4	* USAGE IS BINARY
COMP-5 COMPUTATIONAL-5	* USAGE COMP-5
INDEX	*USAGE IS INDEX
NATIONAL	*USAGE IS NATIONAL
DISPLAY	This is the default usage, so a comment is not generated.
DISPLAY-1	* USAGE IS DISPLAY-1
POINTER	* USAGE IS POINTER
PROCEDURE-POINTER	* USAGE IS PROCEDURE-POINTER

The characteristics of the data item that you define using the LIKE clause are shown in the listing of your compiled program.

Rules and restrictions

You can use the LIKE clause at level-numbers 01 through 49, and at level-number 77.

If you specify data-name or FILLER entries, you can put the LIKE clause in any position after them. Otherwise, you can put it in any position after the level-number.

You can specify one or more other clauses before or after the LIKE clause:

- JUSTIFIED
- SYNCHRONIZED
- BLANK WHEN ZERO
- VALUE
- OCCURS

Note that you can specify BLANK WHEN ZERO only if it has not previously been inherited.

You cannot use the LIKE clause with the following clauses:

- REDEFINES
- SIGN
- USAGE
- PICTURE
- FORMAT
- TYPE
- TYPEDEF

If you specify any inherited clauses in the LIKE clause, a duplication error will result.

For numeric items, the total number of numeric characters in the new item cannot be zero. But if the item contains decimals, the number of characters in the integer portion can be zero.

If a PICTURE clause specifies a mixture of alphabetic, numeric, or alphanumeric characters, and the LIKE clause has length modification, the new PICTURE clause specifies alphanumeric characters.

You cannot use the LIKE clause to define an item that is subordinate to the item that you name in the clause.

The object of a LIKE clause cannot contain the TYPE clause in its data description. If the object of a LIKE clause is a group item, then none of the items subordinate to this group can be defined using the TYPE clause. If the object of a LIKE clause is subordinate to a (level-01) group item, and an item which is subordinate to the level-01 group item contains a TYPE clause, then the type-name referenced in the TYPE clause must be fully defined at the point in the DATA DIVISION when the LIKE clause is used.

Coding Examples

To create data item DEPTH with the same attributes as data item HEIGHT, you simply write:

```
DEPTH LIKE HEIGHT
```

To create data item PROVINCE with the same attributes as data item STATE, except one byte longer, you write:

```
PROVINCE LIKE STATE (+1)
```

OCCURS clause

The DATA DIVISION language elements used for table handling are the OCCURS clause and the INDEXED BY phrase.

For the INDEXED BY phrase description, see “INDEXED BY phrase” on page 180.

The OCCURS clause specifies tables whose elements can be referred to by indexing or subscripting. It also eliminates the need for separate entries for repeated data items.

Formats for the OCCURS clause include fixed-length tables and variable-length tables.

The *subject* of an OCCURS clause is the data-name of the data item that contains the OCCURS clause. Except for the OCCURS clause itself, data description clauses used with the subject apply to each occurrence of the item described.

Whenever the subject of an OCCURS clause or any data-item subordinate to it is referenced, it must be subscripted or indexed, with the following exceptions:

- When the subject of the OCCURS clause is used as the subject of a SEARCH statement.
- When the subject of the OCCURS clause is used as the subject of a format 2 SORT statement.
- When the subject or a subordinate data item is the object of the ASCENDING/DESCENDING KEY phrase.

- When the subordinate data item is the object of the REDEFINES clause.
- When the subordinate data item is used as the subject of a LENGTH OF special register. For details, see "LENGTH OF" on page 20.

When subscripted or indexed, the subject refers to one occurrence within the table, unless the ALL subscript is used in an intrinsic function.

The OCCURS clause cannot be specified in a data description entry that:

- Has a level number of 01, 66, 77, or 88.
- Describes a redefined data item. (However, a redefined item can be subordinate to an item that contains an OCCURS clause.) See "REDEFINES clause" on page 203.

Fixed-length tables

Fixed-length tables are specified using the OCCURS clause.

Because seven subscripts or indexes are allowed, six nested levels and one outermost level of the format-1 OCCURS clause are allowed. The format-1 OCCURS clause can be specified as subordinate to the OCCURS DEPENDING ON clause. In this way, a table of up to seven dimensions can be specified.

Format 1: fixed-length tables

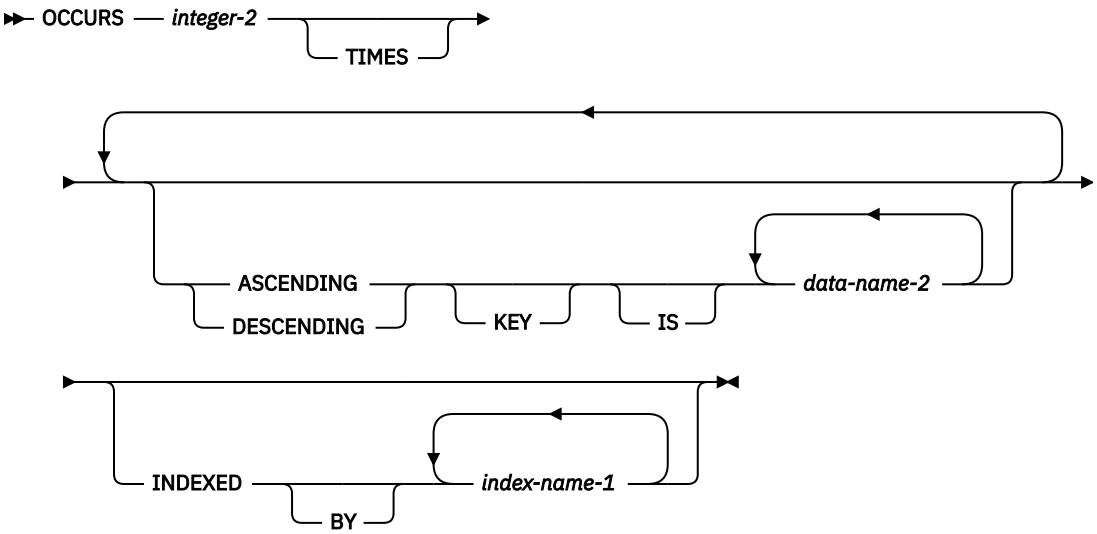

integer-2
The exact number of occurrences. *integer-2* must be greater than zero.

ASCENDING KEY and DESCENDING KEY phrases

Data is arranged in ascending or descending order, depending on the keyword specified, according to the values contained in *data-name-2*. The data-names are listed in their descending order of significance.

The order is determined by the rules for comparison of operands (see "Relation conditions" on page 244). The ASCENDING KEY and DESCENDING KEY data items are used in OCCURS clauses, the SEARCH ALL statements for a binary search of the table element, and the format 2 SORT statements. As an alternative, keys can be specified with the format 2 SORT statements.

data-name-2
Must be the name of the subject entry or the name of an entry subordinate to the subject entry. *data-name-2* cannot be a windowed date field. *data-name-2* can be qualified.

If *data-name-2* names the subject entry, that entire entry becomes the ASCENDING KEY or DESCENDING KEY and is the only key that can be specified for this table element.

If *data-name-2* does not name the subject entry, then *data-name-2*:

- Must be subordinate to the subject of the table entry itself
- Must *not* be subordinate to, or follow, any other entry that contains an OCCURS clause
- Must not contain an OCCURS clause

data-name-2 must not have subordinate items that contain OCCURS DEPENDING ON clauses.

When the ASCENDING KEY or DESCENDING KEY phrase is specified, the following rules apply:

- Keys must be listed in decreasing order of significance.
- The total number of keys for a given table element must not exceed 12.
- The data in the table must be arranged in ascending or descending sequence according to the collating sequence in use.
- The key must be described with one of the following usages:
  - BINARY
  - DISPLAY
  - DISPLAY-1
  - NATIONAL
  - PACKED-DECIMAL
  - COMPUTATIONAL
  - COMPUTATIONAL-1
  - COMPUTATIONAL-2
  - COMPUTATIONAL-3
  - COMPUTATIONAL-4
  - COMPUTATIONAL-5
- A key described with usage NATIONAL can have one of the following categories: national, national-edited, numeric-edited, numeric, or external floating-point.
- The sum of the lengths of all the keys associated with one table element must not exceed 256.
- If a key is specified without qualifiers and it is not a unique name, the key will be implicitly qualified with the subject of the OCCURS clause and all qualifiers of the OCCURS clause subject.

The following example illustrates the specification of ASCENDING KEY data items:

```
WORKING-STORAGE SECTION.
01  TABLE-RECORD.
    05  EMPLOYEE-TABLE OCCURS 100 TIMES
        ASCENDING KEY IS WAGE-RATE EMPLOYEE-NO
        INDEXED BY A, B.
      10  EMPLOYEE-NAME                     PIC X(20).
      10  EMPLOYEE-NO                       PIC 9(6).
      10  WAGE-RATE                         PIC 9999V99.
      10  WEEK-RECORD OCCURS 52 TIMES
          ASCENDING KEY IS WEEK-NO INDEXED BY C.
        15  WEEK-NO                         PIC 99.
        15  AUTHORIZED-ABSENCES             PIC  9.
        15  UNAUTHORIZED-ABSENCES           PIC  9.
        15  LATE-ARRIVALS                   PIC  9.
```

The keys for EMPLOYEE-TABLE are subordinate to that entry, and the key for WEEK-RECORD is subordinate to that subordinate entry.

In the preceding example, records in EMPLOYEE-TABLE must be arranged in ascending order of WAGE-RATE, and in ascending order of EMPLOYEE-NO within WAGE-RATE. Records in WEEK-RECORD must be arranged in ascending order of WEEK-NO. If they are not, results of any SEARCH ALL statement are unpredictable.

INDEXED BY phrase

The INDEXED BY phrase specifies the indexes that can be used with a table. A table without an INDEXED BY phrase can be referred to through indexing by using an index-name associated with another table.

For more information about using indexing, see "Subscripting using index-names (indexing)" on page 65.

Indexes normally are allocated in static memory associated with the program that contains the table. Thus indexes are in the last-used state when a program is reentered. However, in the following cases, indexes are allocated on a per-invocation basis. Thus you must set the value of the index on every entry for indexes on tables in the following sections:

- The LOCAL-STORAGE SECTION
- The LINKAGE SECTION of:
  - Programs compiled with the RECURSIVE clause

Indexes specified in an external data record do not possess the external attribute.

index-name-1

Each index-name specifies an index to be created by the compiler for use by the program. These index-names are *not* data-names and are not identified elsewhere in the COBOL program; instead, they can be regarded as private special registers for the use of this object program only. They are not data and are not part of any data hierarchy.

Unreferenced index names need not be uniquely defined.

In one table entry, up to 12 index-names can be specified.

If a data item that possesses the global attribute includes a table accessed with an index, that index also possesses the global attribute. Therefore, the scope of an index-name is the same as that of the data-name that names the table in which the index is defined.

Variable-length tables

You can specify variable-length tables by using the OCCURS DEPENDING ON clause.

Format 2: variable-length tables

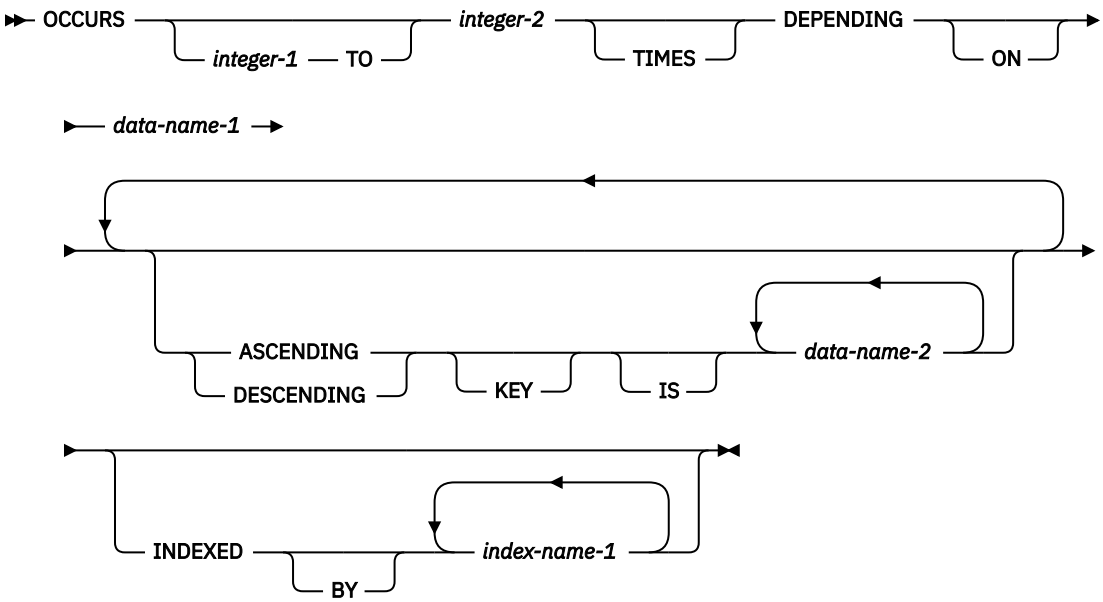

integer-1
The minimum number of occurrences.

The value of *integer-1* must be greater than or equal to zero, and it must also be less than the value of *integer-2*.

If *integer-1* is omitted, a value of 1 is assumed and the keyword TO must also be omitted.

integer-2
The maximum number of occurrences.

integer-2 must be greater than *integer-1*.

The *length* of the subject item is fixed. Only the *number of repetitions* of the subject item is variable.

OCCURS DEPENDING ON clause

The OCCURS DEPENDING ON clause specifies variable-length tables.

data-name-1
Identifies the *object* of the OCCURS DEPENDING ON clause; that is, the data item whose current value represents the current number of occurrences of the *subject* item. The contents of items whose occurrence numbers exceed the value of the object are undefined.

The object of the OCCURS DEPENDING ON clause (*data-name-1*) must describe an integer data item. The object cannot be a windowed date field.

The object of the OCCURS DEPENDING ON clause must not occupy any storage position within the range of the table (that is, any storage position from the first character position in the table through the last character position in the table).

The object of the OCCURS DEPENDING ON clause cannot be variably located; the object cannot follow an item that contains an OCCURS DEPENDING ON clause.

If the OCCURS clause is specified in a data description entry included in a record description entry that contains the EXTERNAL clause, *data-name-1*, if specified, must reference a data item that possesses the external attribute. *data-name-1* must be described in the same DATA DIVISION as the subject of the entry.

If the OCCURS clause is specified in a data description entry subordinate to one that contains the GLOBAL clause, *data-name-1*, if specified, must be a global name. *data-name-1* must be described in the same DATA DIVISION as the subject of the entry.

All data-names used in the OCCURS clause can be qualified; they cannot be subscripted or indexed.

At the time that the group item, or any data item that contains a subordinate OCCURS DEPENDING ON item or that follows but is not subordinate to the OCCURS DEPENDING ON item, is referenced, the value of the object of the OCCURS DEPENDING ON clause must fall within the range *integer-1* through *integer-2* .

The behavior is undefined if the value of the object is outside of the range *integer-1* through *integer-2*.

When a group item that contains a subordinate OCCURS DEPENDING ON item is referred to, the part of the table area used in the operation is determined as follows:

- If the object is outside the group, only that part of the table area that is specified by the object at the start of the operation is used.
- If the object is included in the same group and the group data item is referenced as a sending item, only that part of the table area that is specified by the value of the object at the start of the operation is used in the operation.
- If the object is included in the same group and the group data item is referenced as a receiving item, the maximum length of the group item is used in the operation.

The following statements are affected by the maximum length rule:

- ACCEPT *identifier* (format 1 and 2)

- CALL ... USING BY REFERENCE *identifier*
- MOVE ... TO *identifier*
- READ ... INTO *identifier*
- RELEASE *identifier* FROM ...
- RETURN ... INTO *identifier*
- REWRITE *identifier* FROM ...
- STRING ... INTO *identifier*
- UNSTRING ... INTO *identifier* DELIMITER IN *identifier*
- WRITE *identifier* FROM ...

If a variable-length group item is not followed by a nonsubordinate item, the maximum length of the group is used when it appears as the identifier in CALL ... USING BY REFERENCE *identifier*. Therefore, the object of the OCCURS DEPENDING ON clause does not need to be set unless the group is variably located.

If the group item is followed by a nonsubordinate item, the actual length, rather than the maximum length, is used. At the time the subject of entry is referenced, or any data item subordinate or superordinate to the subject of entry is referenced, the object of the OCCURS DEPENDING ON clause must fall within the range *integer-1* through *integer-2*.

Certain uses of the OCCURS DEPENDING ON clause result in *complex OCCURS DEPENDING ON* (ODO) items. The following items constitute complex ODO items:

- A data item described with an OCCURS DEPENDING ON clause that is followed by a nonsubordinate elementary data item, described with or without an OCCURS clause
- A data item described with an OCCURS DEPENDING ON clause that is followed by a nonsubordinate group item
- A group item that contains one or more subordinate items described with an OCCURS DEPENDING ON clause
- A data item described with an OCCURS clause or an OCCURS DEPENDING ON clause that contains a subordinate data item described with an OCCURS DEPENDING ON clause (a table that contains variable-length elements)
- An index-name associated with a table that contains variable-length elements

The object of an OCCURS DEPENDING ON clause cannot be a nonsubordinate item that follows a complex ODO item.

Any nonsubordinate item that follows an item described with an OCCURS DEPENDING ON clause is a *variably located item*. That is, its location is affected by the value of the OCCURS DEPENDING ON object.

When implicit redefinition is used in a File Description (FD) entry, subordinate level items can contain OCCURS DEPENDING ON clauses.

The INDEXED BY phrase can be specified for a table that has a subordinate item that contains an OCCURS DEPENDING ON clause.

For more information about complex OCCURS DEPENDING ON, see *Complex OCCURS DEPENDING ON* in the *COBOL for Linux on x86 Programming Guide*.

The ASCENDING KEY phrase, the DESCENDING KEY phrase, and the INDEXED BY clause are described under "Fixed-length tables" on page 178.

PICTURE clause

The PICTURE clause specifies the general characteristics and editing requirements of an elementary item.

Format

```
▶▶─┬─ PICTURE ─┬─┬──────┬─ character-string ─▶
   └─ PIC ─────┘ └─ IS ─┘

▶─┬──────────────
```

- If + is specified in the PICTURE character string, the way in which positive and negative numbers are represented is determined by a locale.
- The sending data is aligned on the decimal point, and (if necessary) truncated or padded with zeros at either end within the receiving character positions of the receiving data item. The data is also right-justified, with grouping and separators applied according to the locale specification. Leading zeros are replaced by blanks.

If, after formatting, the number of digit positions specified in the PICTURE character string do not fit into the receiving item, and there are excess digits in the sending item, digits are truncated on the left and an operating system escape message is issued.

Symbols used in the PICTURE clause

Any punctuation character that appears within the PICTURE character-string is not considered a punctuation character, but rather is a PICTURE character-string symbol.

When specified in the SPECIAL-NAMES paragraph, DECIMAL-POINT IS COMMA exchanges the functions of the period and the comma in PICTURE character-strings and in numeric literals.

The lowercase letters that correspond to the uppercase letters that represent the following PICTURE symbols are equivalent to their uppercase representations in a PICTURE character-string:

```
A, B, E, G, N, P, S,  V, X, Z, CR, DB
```

All other lowercase letters are not equivalent to their corresponding uppercase representations.

The meaning of each PICTURE clause symbol is defined in the following tables:

- If the LOCALE phrase is not specified, see Table 17 on page 184.
- If the LOCALE phrase is specified, see Table 18 on page 187.

The heading *Size* indicates how the item is counted in determining the number of character positions in the item. The type of the character positions depends on the USAGE clause specified for the item.

Usage	Type of character positions	Number of bytes per character
DISPLAY	Alphanumeric	1
DISPLAY-1	DBCS	2
NATIONAL	National	2
All others	Conceptual	Not applicable

Table 17. ***PICTURE clause symbol meanings when the LOCALE phrase is not specified***

Symbol	Meaning	Size
A	A character position that can contain only a letter of the Latin alphabet or a space.	Each 'A' is counted as one character position in the size of the data item.
B	For usage DISPLAY, a character position into which an alphanumeric space is inserted. For usage DISPLAY-1, a character position into which a DBCS space is inserted. For usage NATIONAL, a character position into which a national space is inserted.	Each 'B' is counted as one character position in the size of the data item.

*Table 17. **PICTURE clause symbol meanings when the LOCALE phrase is not specified** (continued)*		
Symbol	**Meaning**	**Size**
E	Marks the start of the exponent in an external floating-point item. For additional details of external floating-point items, see "Data categories and PICTURE rules" on page 190.	Each 'E' is counted as one character position in the size of the data item.
G	A DBCS character position.	Each 'G' is counted as one character position in the size of the data item.
N	A DBCS character position when specified with usage DISPLAY-1 or when usage is unspecified and the NSYMBOL(DBCS) compiler option is in effect. For category national, a national character position when specified with usage NATIONAL or when usage is unspecified and the NSYMBOL(NATIONAL) compiler option is in effect. For category national-edited, a national character position.	Each 'N' is counted as one character position in the size of the data item.
P	An assumed decimal scaling position. Used to specify the location of an assumed decimal point when the point is not within the number that appears in the data item. See "P symbol" on page 189 for further details.	Not counted in the size of the data item. Scaling position characters are counted in determining the maximum number of digit positions in numeric-edited items or in items that are used as arithmetic operands. The size of the value is the number of digit positions represented by the PICTURE character-string.
S	An indicator of the presence (but not the representation, and not necessarily the position) of an operational sign. An operational sign indicates whether the value of an item involved in an operation is positive or negative.	Not counted in the size of the elementary item, unless an associated SIGN clause specifies the SEPARATE CHARACTER phrase (which would be counted as one character position).
V	An indicator of the location of the assumed decimal point. Does not represent a character position. When the assumed decimal point is to the right of the rightmost symbol in the string, the V is redundant.	Not counted in the size of the elementary item.
X	A character position that can contain any allowable character from the alphanumeric character set of the computer.	Each 'X' is counted as one character position in the size of the data item.
Z	A leading numeric character position. When that position contains a zero, a space character replaces the zero.	Each 'Z' is counted as one character position in the size of the data item.

Table 17. ***PICTURE clause symbol meanings when the LOCALE phrase is not specified*** *(continued)*		
Symbol	**Meaning**	**Size**
9	A character position that contains a numeral.	Each nine specifies one decimal digit in the value of the item. For usages DISPLAY and NATIONAL, each nine is counted as one character position in the size of the data item.
0	A character position into which the numeral zero is inserted.	Each zero is counted as one character position in the size of the data item.
1	A character position that contains a boolean value of B"1" or B"0". Usage must be explicitly or implicitly defined as DISPLAY.	Each boolean value is counted as one character position in the size of the data item.
/	A character position into which the slash character is inserted.	Each slash character is counted as one character position in the size of the data item.
,	A character position into which a comma is inserted.	Each comma is counted as one character position in the size of the data item.
.	An editing symbol that represents the decimal point for alignment purposes. If the period insertion character is the last symbol in the PICTURE character string, the PICTURE clause must be the last clause of that data description entry and must be immediately followed by the separator period. The decimal point character used at runtime is taken from the locale. **Note:** For a given program, the functions of the period and comma are exchanged if the clause DECIMAL-POINT IS COMMA is specified in the SPECIAL-NAMES paragraph. In this exchange, the rules for the period apply to the comma and the rules for the comma apply to the period wherever they appear in a PICTURE clause.	Each period is counted as one character position in the size of the data item.
+ - CR DB	Editing sign control symbols. Each represents the character position into which the editing sign control symbol is placed.	Each character used in the editing sign symbol is counted as one character position in the size of the data item.
*	A check protect symbol: a leading numeric character position into which an asterisk is placed when that position contains a zero.	Each asterisk is counted as one character position in the size of the item.
cs	*cs* can be any valid currency symbol. A currency symbol represents a character position into which a currency sign value is placed. The default currency symbol is the character assigned the value X'24' in the code page in effect at compile time. In this document, the default currency symbol is represented by the dollar sign ($) and *cs* stands for any valid currency symbol. For details, see "Currency symbol" on page 190.	The first occurrence of a currency symbol adds the number of characters in the currency sign value to the size of the data item. Each subsequent occurrence adds one character position to the size of the data item.

Table 18. ***PICTURE clause symbol meanings when the LOCALE phrase is specified***		
Symbol	**Meaning**	**Size**
9	A character position that contains a numeral and is counted in the number of numerals that may appear in the edited item.	Each nine specifies one decimal digit in the value of the item. For usages DISPLAY and NATIONAL, each nine is counted as one character position in the size of the data item.
.	An editing symbol that represents the decimal point for alignment purposes. If the period insertion character is the last symbol in the PICTURE character string, the PICTURE clause must be the last clause of that data description entry and must be immediately followed by the separator period. The decimal point character used at runtime is taken from the locale. **Note:** For a given program, the functions of the period and comma are exchanged if the clause DECIMAL-POINT IS COMMA is specified in the SPECIAL-NAMES paragraph. In this exchange, the rules for the period apply to the comma and the rules for the comma apply to the period wherever they appear in a PICTURE clause.	Each period is counted as one character position in the size of the data item.
+	Editing sign control symbol. The + indicates that the edited item is to be signed in accordance with the specified locale. If + is not specified, the edited item will be unsigned.	Each + is counted as one character position in the size of the data item.
cs	The currency symbol in the character string indicates that the edited item is to include the currency string associated with the specified locale.	The first occurrence of a currency symbol adds the number of characters in the currency sign value to the size of the data item. Each subsequent occurrence adds one character position to the size of the data item.

Figure 1 on page 188 shows the sequence in which PICTURE clause symbols must be specified if the LOCALE phrase is not specified. See the notes at the end of the figure. Figure 2 on page 189 shows the sequence in which PICTURE clause symbols must be specified if the LOCALE phrase is specified.

Second Symbol \ First Symbol		Non-floating Insertion Symbols										Floating Insertion Symbols						Other Symbols								
		B	0	/	,	.	{+ -}	{+ -}	{CR DB}	$	E	{Z *}	{Z *}	{+ -}	{+ -}	$	$	9	A X	S	V	P	P	1	G	N
Non-floating Insertion Symbols	B	X	X	X	X	X	X			X		X	X	X	X	X	X	X	X		X		X		X	
	0	X	X	X	X	X	X			X		X	X	X	X	X	X	X	X		X		X			
	/	X	X	X	X	X	X			X		X	X	X	X	X	X	X	X		X		X			
	,	X	X	X	X	X	X			X		X	X	X	X	X	X	X			X		X			
	.	X	X	X	X		X			X		X		X		X		X								
	{+ -}																									
	{+ -}	X	X	X	X	X				X	X	X	X			X	X	X			X	X	X			
	{CR DB}	X	X	X	X	X				X		X	X			X	X	X			X	X	X			
	$						X																			
	E				X	X												X			X					
Floating Insertion Symbols	{Z *}	X	X	X	X		X			X		X														
	{Z *}	X	X	X	X	X	X			X		X	X								X		X			
	{+ -}	X	X	X	X					X				X												
	{+ -}	X	X	X	X	X				X				X	X						X		X			
	$	X	X	X	X		X									X										
	$	X	X	X	X	X	X									X	X				X		X			
Other Symbols	9	X	X	X	X	X	X			X		X		X		X		X	X	X	X		X			
	A X	X	X	X														X	X							
	S																									
	V	X	X	X	X		X			X		X		X		X		X		X		X				
	P	X	X	X	X		X			X		X		X		X		X		X		X				
	P						X			X										X	X		X			
	1																									
	G	X																							X	
	N																									X

Figure 1. PICTURE clause symbol sequence when the LOCALE phrase is not specified

Notes to Figure 1 on page 188:

1. An X at an intersection indicates that the symbol(s) at the top of the column may, in a given character-string, appear anywhere to the left of the symbol(s) at the left of the row.
2. The $ character, however it is represented in the appropriate character set, is the default value for the currency symbol.

3. At least one of the symbols A, X, Z, 9, or *, or at least two of the symbols +, -, or $ must be present in a PICTURE string.
4. The symbols G or N can appear alone in the PICTURE character-string.
5. Nonfloating insertion symbols + and -, floating insertion symbols Z, *, +, -, and $, and the symbol P appear twice in the above PICTURE character precedence table. The leftmost column and uppermost row for each symbol represents its use to the left of the decimal point position. The second appearance of the symbol in the table represents its use to the right of the decimal point position. ({ }) indicate items that are mutually exclusive.
6. Braces ({}) indicate items that are mutually exclusive.

First Symbol / Second Symbol		Symbols			
		9	CS	.	+
Symbols	9	X	X	X	X
	CS				X
	.	X	X		X
	+				

Figure 2. PICTURE clause symbol sequence when the LOCALE phrase is specified

P symbol

The symbol P specifies a scaling position and implies an assumed decimal point (to the left of the Ps if the Ps are leftmost PICTURE characters; to the right of the Ps if the Ps are rightmost PICTURE characters).

The assumed decimal point symbol V is redundant as either the leftmost or rightmost character within such a PICTURE description.

The symbol P can be specified only as a continuous string of Ps in the leftmost or rightmost digit positions within a PICTURE character-string.

In certain operations that reference a data item whose PICTURE character-string contains the symbol P, the algebraic value of the data item is used rather than the actual character representation of the data item. This algebraic value assumes the decimal point in the prescribed location and zero in place of the digit position specified by the symbol P. The size of the value is the number of digit positions represented by the PICTURE character-string. These operations are any of the following ones:

- Any operation that requires a numeric sending operand
- A MOVE statement where the sending operand is numeric and its PICTURE character-string contains the symbol P
- A MOVE statement where the sending operand is numeric-edited and its PICTURE character-string contains the symbol P, and the receiving operand is numeric or numeric-edited
- A comparison operation where both operands are numeric

In all other operations, the digit positions specified with the symbol P are ignored and are not counted in the size of the operand.

Currency symbol

The currency symbol in a picture character-string is represented by the default currency symbol $ or by a single character specified either in the CURRENCY compiler option or in the CURRENCY SIGN clause in the SPECIAL-NAMES paragraph of the ENVIRONMENT DIVISION.

If the CURRENCY SIGN clause is specified, the CURRENCY and NOCURRENCY compiler options are ignored. If the CURRENCY SIGN clause is not specified and the NOCURRENCY compiler option is in effect, the dollar sign ($) is used as the default currency sign value and currency symbol. For more information about the CURRENCY SIGN clause, see "CURRENCY SIGN clause" on page 101. For more information about the CURRENCY and NOCURRENCY compiler options, see *CURRENCY* in the *COBOL for Linux on x86 Programming Guide*.

A currency symbol can be repeated within the PICTURE character-string to specify floating insertion. Different currency symbols must not be used in the same PICTURE character-string.

Unlike all other picture symbols, currency symbols are case sensitive. For example, 'D' and 'd' specify different currency symbols.

A currency symbol can be used only to define a numeric-edited item with USAGE DISPLAY.

Character-string representation

The topic lists symbols that can appear once or more than once in the PICTURE character-string.

Symbols that can appear more than once

The following symbols can appear more than once in one PICTURE character-string:

```
A  B  G  N  P  X   Z  9  0  /  ,  +  -  *  cs
```

At least one of the symbols A, G, N, X, Z, 9, or *, or at least two of the symbols +, –, or *cs* must be present in a PICTURE string.

An unsigned nonzero integer enclosed in parentheses immediately following any of these symbols specifies the number of consecutive occurrences of that symbol.

Example: The following two PICTURE clause specifications are equivalent:

```
PICTURE IS $99999.99CR
PICTURE IS $9(5).9(2)CR
```

Symbols that can appear only once

The following symbols can appear only once in one PICTURE character-string:

```
E  S  V  .  CR  DB  1
```

Except for the PICTURE symbol V, each occurrence of any of the above symbols in a given PICTURE character-string represents an occurrence of that character or set of allowable characters in the data item.

If the LOCALE phrase is specified, only the symbol 9 can appear more than once. If the LOCALE phrase is specified, the following symbols may appear only once in one PICTURE character string:

```
.  +  cs
```

Data categories and PICTURE rules

The allowable combinations of PICTURE symbols determine the data category of the item.

The data categories are:

- Alphabetic
- Alphanumeric
- Alphanumeric-edited
- Boolean
- DBCS
- External floating-point
- National
- National-edited
- Numeric
- Numeric-edited

Note:

- Category internal floating point is defined by a USAGE clause that specifies the COMP-1 or COMP-2 phrase.
- If the LOCALE phrase is specified in a PICTURE clause, the category of data defined by that PICTURE clause is numeric-edited only.

Alphabetic items

The PICTURE character-string can contain only the symbol A.

The content of the item must consist only of letters of the Latin alphabet and the space character.

Other clauses

USAGE DISPLAY must be specified or implied.

Any associated VALUE clause must specify an alphanumeric literal containing only alphabetic characters, SPACE, or a symbolic-character as the value of a figurative constant.

The runtime locale in effect must indicate a code page that includes DBCS characters. For information about locales, see "Locale considerations" on page 635.

Do not include a single byte character in a DBCS data item.

When padding is required for a DBCS data item, the following rules apply:

- Padding is done using double-byte space characters until the data area is filled (based on the number of double-byte character positions allocated for the data item).
- Padding is done using single-byte space characters when the padding needed is not an even number of bytes (for example, when an alphanumeric group item is moved to a DBCS data item).

Boolean items

The following rules apply:

- The PICTURE character-string can contain only the symbol 1.
- Only one character 1 can be specified.
- The USAGE of an item can only be DISPLAY.
- An associated VALUE clause must specify a Boolean literal (B"1" or B"0") or zero.
- The following clauses cannot be specified for a Boolean item:
  - SIGN clause
  - BLANK WHEN ZERO clause
  - ASCENDING/DESCENDING KEY clause.

Alphanumeric items

The PICTURE character-string must consist of certain symbols.

The symbols are:

- One or more occurrences of the symbol X.
- Combinations of the symbols A, X, and 9. (A character-string containing all As or all 9s does not define an alphanumeric item.)

The item is treated as if the character-string contained only the symbol X.

The contents of the item in standard data format can be any allowable characters from the character set of the computer.

Other clauses

USAGE DISPLAY must be specified or implied.

Any associated VALUE clause must specify an alphanumeric literal or one of the following figurative constants:

- ZERO
- SPACE
- QUOTE
- HIGH-VALUE
- LOW-VALUE
- *symbolic-character*
- ALL *alphanumeric-literal*

Alphanumeric-edited items

The PICTURE character-string can contain the following symbols: `A X 9 B 0 /`.

The string must contain at least one A or X, and at least one B or 0 (zero) or /.

The contents of the item in standard data format must be two or more characters from the character set of the computer.

Other clauses

USAGE DISPLAY must be specified or implied.

Any associated VALUE clause must specify an alphanumeric literal or or one of the following figurative constants:

- ZERO
- SPACE
- QUOTE
- HIGH-VALUE
- LOW-VALUE
- *symbolic-character*
- ALL *alphanumeric-literal*

The literal is treated exactly as specified; no editing is done.

DBCS items

The PICTURE character-string can contain the symbols G, G and B, or N. Each G, B, or N represents a single DBCS character position.

Any associated VALUE clause must contain a DBCS literal, the figurative constant SPACE, or the figurative constant ALL *DBCS-literal*.

Other clauses

The runtime locale in effect must indicate a code page that includes DBCS characters. For information about locales, see "Locale considerations" on page 635.

Do not include a single byte character in a DBCS data item.

When padding is required for a DBCS data item, the following rules apply:

- Padding is done using double-byte space characters until the data area is filled (based on the number of double-byte character positions allocated for the data item).
- Padding is done using single-byte space characters when the padding needed is not an even number of bytes (for example, when an alphanumeric group item is moved to a DBCS data item).

When PICTURE symbol G is used, USAGE DISPLAY-1 must be specified. When PICTURE symbol N is used and the NSYMBOL(DBCS) compiler option is in effect, USAGE DISPLAY-1 is implied if the USAGE clause is omitted.

External floating-point items

A data item is described as category external floating-point by its PICTURE character-string.

The PICTURE character-string details are described below.

Format

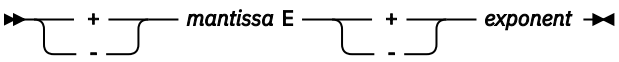

+ or -

A sign character must immediately precede both the mantissa and the exponent.

A + sign indicates that a positive sign will be used in the output to represent positive values and that a negative sign will represent negative values.

A - sign indicates that a blank will be used in the output to represent positive values and that a negative sign will represent negative values.

Each sign position occupies one byte of storage.

mantissa

The mantissa can contain the symbols:

```
9 . V
```

An actual decimal point can be represented with a period (.) while an assumed decimal point is represented by a V.

Either an actual or an assumed decimal point must be present in the mantissa; the decimal point can be leading, embedded, or trailing.

The mantissa can contain from 1 to 16 numeric characters.

E

Indicates the exponent.

exponent

The exponent must consist of the symbol 99.

Example: Pic -9v9(9)E-99

The DISPLAY phrase of the USAGE clause and a floating-point picture character-string define the item as a *display floating-point data item*.

The NATIONAL phrase of the USAGE clause and a floating-point picture character-string define the item as a *national floating-point data item.*

For items defined with usage DISPLAY, each picture symbol except V defines one alphanumeric character position in the item.

For items defined with usage NATIONAL, each picture symbol except V defines one national character position in the item.

Other clauses

The DISPLAY phrase or the NATIONAL phrase of the USAGE clause must be specified or implied.

The LIKE, OCCURS, REDEFINES, RENAMES, and TYPEDEF clauses can be associated with external floating-point items.

The SIGN clause is accepted as documentation and has no effect on the representation of the sign.

The SYNCHRONIZED clause is treated as documentation.

The following clauses are invalid with external floating-point items:

- BLANK WHEN ZERO
- JUSTIFIED
- VALUE

National items

The PICTURE character-string can contain one or more occurrences of the picture symbol N.

These rules apply when the NSYMBOL(NATIONAL) compiler option is in effect or the USAGE NATIONAL clause is specified. In the absence of a USAGE NATIONAL clause, if the NSYMBOL(DBCS) compiler option is in effect, picture symbol N represents a DBCS character and the rules of the PICTURE clause for a DBCS item apply.

Each N represents a single national character position.

Any associated VALUE clause must specify an alphanumeric literal, a national literal, or one of the following figurative constants:

- ZERO
- SPACE
- QUOTE
- HIGH-VALUE
- LOW-VALUE
- *symbolic-character*
- ALL *alphanumeric-literal*
- ALL *national-literal*

Other clauses

Only the NATIONAL phrase can be specified in the USAGE clause. When PICTURE symbol N is used and the NSYMBOL(NATIONAL) compiler option is in effect, USAGE NATIONAL is implied if the usage clause is omitted.

The following clauses can be used:

- JUSTIFIED
- EXTERNAL
- GLOBAL
- OCCURS
- REDEFINES

- RENAMES
- SYNCHRONIZED
- TYPEDEF

The following clauses cannot be used:

- BLANK WHEN ZERO
- DATE FORMAT
- FORMAT
- SIGN
- TYPE

National-edited items

The PICTURE character-string must contain at least one symbol `N`, and at least one instance of one of these symbols: `B` `0` (zero) or `/` (slash).

Each symbol represents a single national character position.

Any associated VALUE clause must specify an alphanumeric literal, a national literal, or one of the following figurative constants:

- ZERO
- SPACE
- QUOTE
- HIGH-VALUE
- LOW-VALUE
- *symbolic-character*
- ALL *alphanumeric-literal*
- ALL *national-literal*

The literal is treated exactly as specified; no editing is done.

The NSYMBOL(NATIONAL) compiler option has no effect on the definition of a data item of category national-edited.

Other clauses

USAGE NATIONAL must be specified or implied.

The following clauses can be used:

- JUSTIFIED
- EXTERNAL
- GLOBAL
- OCCURS
- REDEFINES
- RENAMES
- SYNCHRONIZED
- TYPEDEF

The following clauses cannot be used:

- BLANK WHEN ZERO
- DATE FORMAT
- FORMAT

- SIGN
- TYPE

Numeric items

There are several types of numeric items.

The types are:

- Binary
- Packed decimal (internal decimal)
- Zoned decimal (external decimal)
- National decimal (external decimal)

The type of a numeric item is defined by the usage clause as shown in the table below.

Table 19. ***Numeric types***

Type	USAGE clause
Binary	BINARY, COMP, COMP-4, or COMP-5
Internal decimal	PACKED-DECIMAL, COMP-3
Zoned decimal (external decimal)	DISPLAY
National decimal (external decimal)	NATIONAL

For numeric date fields, the PICTURE character-string can contain only the symbols 9 and S. For all other numeric fields, the PICTURE character-string can contain only the symbols 9, P, S, and V.

The symbol S can be written only as the leftmost character in the PICTURE character-string.

The symbol V can be written only once in a given PICTURE character-string.

For binary items, the number of digit positions must range from 1 through 18 inclusive. For packed decimal and zoned decimal items the number of digit positions must range from 1 through 18, inclusive, when the ARITH(COMPAT) compiler option is in effect, or from 1 through 31, inclusive, when the ARITH(EXTEND) or ARITH(FULL) compiler option is in effect.

For numeric date fields, the number of digit positions must match the number of characters specified by the DATE FORMAT clause.

If unsigned, the contents of the item in standard data format must contain a combination of the Arabic numerals 0-9. If signed, it can also contain a +, -, or other representation of the operational sign.

Examples of valid ranges

```
 PICTURE   Valid range of values
   9999     0 through 9999
    S99    -99 through +99
 S999V9    -999.9 through +999.9
 PPP999     0 through .000999
S999PPP    -1000 through -999000 and
           +1000 through +999000 or zero
```

Other clauses

The USAGE of the item can be DISPLAY, NATIONAL, BINARY, COMPUTATIONAL, PACKED-DECIMAL, COMPUTATIONAL-3, COMPUTATIONAL-4, or COMPUTATIONAL-5.

For signed numeric items described with usage NATIONAL, the SIGN IS SEPARATE clause must be specified or implied.

The TRUNC compiler option can affect the use of numeric data items. For details, see *TRUNC* in the *COBOL for Linux on x86 Programming Guide*.

Numeric-edited items

The PICTURE character-string can contain certain symbols.

The symbols are:

```
B  P  V  Z  9  0  /  ,  .  +  -  CR  DB  *  cs
```

The combinations of symbols allowed are determined from the PICTURE clause symbol order allowed (see the figure in "Symbols used in the PICTURE clause" on page 184), and the editing rules (see "PICTURE clause editing" on page 197).

The following rules apply:

- Either the BLANK WHEN ZERO clause must be specified for the item, or the string must contain at least one of the following symbols:

  ```
  B  /  Z  0  ,  .  *  +  -  CR  DB  cs
  ```

- Only one of the following symbols can be written in a given PICTURE character-string:

  ```
  +  -  CR  DB
  ```

- If the ARITH(COMPAT) compiler option is in effect, then the number of digit positions represented in the character-string must be in the range 1 through 18, inclusive. If the ARITH(EXTEND) or ARITH(FULL) compiler option is in effect, then the number of digit positions represented in the character-string must be in the range 1 through 31, inclusive.
- The total number of character positions in the string (including editing-character positions) must not exceed 127.
- The contents of those character positions representing digits in standard data format must be one of the 10 Arabic numerals.

Other clauses

USAGE DISPLAY or NATIONAL must be specified or implied.

If the usage of the item is DISPLAY, any associated VALUE clause must specify an alphanumeric literal or a figurative constant. The value is assigned without editing.

If the usage of the item is NATIONAL, any associated VALUE clause must specify an alphanumeric literal, a national literal, or a figurative constant. The value is assigned without editing.

PICTURE clause editing

There are two general methods of editing in a PICTURE clause, insertion editing, and suppression and replacement editing.

Insertion editing includes the following types of editing:

- Simple insertion
- Special insertion
- Fixed insertion
- Floating insertion

Suppression and replacement editing includes the following types of editing:

- Zero suppression and replacement with asterisks
- Zero suppression and replacement with spaces

The type of editing allowed for an item depends on its *data category*. The type of editing that is valid for each category is shown in the following table. *cs* indicates any valid currency symbol.

Table 20. ***Data categories***		
Data category	**Type of editing**	**Insertion symbol**
Alphabetic	None	None
Alphanumeric	None	None
Alphanumeric-edited	Simple insertion	B 0 /
Boolean	None	None
DBCS	Simple insertion	B
External floating-point	Special insertion	.
National	None	None
National-edited	Simple insertion	B 0 /
Numeric	None	None
Numeric-edited	Simple insertion Special insertion Fixed insertion Floating insertion Zero suppression Replacement	B 0 / , . *cs* + - CR DB *cs* + - Z * Z * + - *cs*

Types of editing are described in the following sections:

- "Simple insertion editing" on page 198
- "Special insertion editing" on page 199
- "Fixed insertion editing" on page 199
- "Floating insertion editing" on page 200
- "Zero suppression and replacement editing" on page 202

Simple insertion editing

This type of editing is valid for alphanumeric-edited, numeric-edited, and DBCS items.

Each insertion symbol is counted in the size of the item, and represents the position within the item where the equivalent character is to be inserted. For edited DBCS items, each insertion symbol (B) is counted in the size of the item and represents the position within the item where the DBCS space is to be inserted.

For example:

PICTURE	**Value of data**	**Edited result**
X(10)/XX	ALPHANUMER01	ALPHANUMER/01
X(5)BX(7)	ALPHANUMERIC	ALPHA NUMERIC
99,B999,B000	1234	01,*b*234,*b*000[1]
99,999	12345	12,345
GGBBGG	D1D2D3D4	D1D2*bbbb*D3D4[1]

PICTURE	Value of data	Edited result
Notes: 1. The symbol *b* represents a space.		

Special insertion editing

This type of editing is valid for either numeric-edited items or external floating-point items.

The period (.) is the special insertion symbol; it also represents the actual decimal point for alignment purposes.

Note: If the DECIMAL-POINT IS COMMA clause is specified, then a comma will be used in place of the period.

The period insertion symbol is counted in the size of the item, and represents the position within the item where the actual decimal point is inserted.

Either the actual decimal point or the symbol V as the assumed decimal point, but not both, must be specified in one PICTURE character-string.

For example:

PICTURE	Value of data	Edited result
`999.99`	`1.234`	`001.23`
`999.99`	`12.34`	`012.34`
`999.99`	`123.45`	`123.45`
`999.99`	`1234.5`	`234.50`
`+999.99E+99`	`12345`	`+123.45E+02`

Fixed insertion editing

Fixed insertion editing is valid only for numeric-edited items.

The following insertion symbols are used:

- *cs*
- + - CR DB (editing-sign control symbols)

In fixed insertion editing, only one currency symbol and one editing-sign control symbol can be specified in a PICTURE character-string.

Unless it is preceded by a + or - symbol, the currency symbol must be the first character in the character-string.

When either + or - is used as a symbol, it must be the first or last character in the character-string.

When CR or DB is used as a symbol, it must occupy the rightmost two character positions in the character-string. If these two character positions contain the symbols CR or DB, the uppercase letters are the insertion characters.

Editing sign control symbols produce results that depend on the value of the data item, as shown below:

Editing symbol in PICTURE character-string	Result: data item positive or zero	Result: data item negative
+	+	-
-	space	-
CR	2 spaces	CR
DB	2 spaces	DB

For example:

PICTURE	Value of data	Edited result
`999.99+`	`+6555.556`	`555.55+`
`+9999.99`	`-6555.555`	`-6555.55`
`9999.99`	`+1234.56`	`1234.56`
`$999.99`	`-123.45`	`$123.45`
`-$999.99`	`-123.456`	`-$123.45`
`-$999.99`	`+123.456`	`$123.45`
`$9999.99CR`	`+123.45`	`$0123.45`
`$9999.99CR`	`-123.45`	`$0123.45CR`

Floating insertion editing

Floating insertion editing is valid only for numeric-edited items.

The following symbols are used:

```
cs + -
```

Within one PICTURE character-string, these symbols are mutually exclusive as floating insertion characters.

Floating insertion editing is specified by using a string of at least two of the allowable floating insertion symbols to represent leftmost character positions into which the actual characters can be inserted.

The leftmost floating insertion symbol in the character-string represents the leftmost limit at which the actual character can appear in the data item. The rightmost floating insertion symbol represents the rightmost limit at which the actual character can appear.

The second leftmost floating insertion symbol in the character-string represents the leftmost limit at which numeric data can appear within the data item. Nonzero numeric data can replace all characters at or to the right of this limit.

Any simple-insertion symbols (B 0 / ,) within or to the immediate right of the string of floating insertion symbols are considered part of the floating character-string. If the period (.) special-insertion symbol is included within the floating string, it is considered to be part of the character-string.

To avoid truncation, the minimum size of the PICTURE character-string must be:

- The number of character positions in the sending item, plus
- The number of nonfloating insertion symbols in the receiving item, plus
- One character position for the floating insertion symbol

Representing floating insertion editing

In a PICTURE character-string, there are two ways to represent floating insertion editing and thus two ways in which editing is performed:

1. Any or all leading numeric character positions to the left of the decimal point are represented by the floating insertion symbol. When editing is performed, a single floating insertion character is placed to the immediate left of the first nonzero digit in the data, or of the decimal point, whichever is farther to the left. The character positions to the left of the inserted character are filled with spaces.

   If all numeric character positions in the PICTURE character-string are represented by the insertion character, then at least one of the insertion characters must be to the left of the decimal point.
2. All the numeric character positions are represented by the floating insertion symbol. When editing is performed, then:
   - If the value of the data is zero, the entire data item will contain spaces.
   - If the value of the data is nonzero, the result is the same as in rule 1.

For example:

PICTURE	Value of data	Edited result
`$$$$.99`	`.123`	`$.12`
`$$$9.99`	`.12`	`$0.12`
`$,$$$,999.99`	`-1234.56`	`$1,234.56`
`+,+++,999.99`	`-123456.789`	`-123,456.78`
`$$,$$$,$$$.99CR`	`-1234567`	`$1,234,567.00CR`
`++,+++,+++.+++`	`0000.00`	

Zero suppression and replacement editing

Zero suppression and replacement editing is valid only for numeric-edited items.

In zero suppression editing, the symbols Z and * are used. These symbols are mutually exclusive in one PICTURE character-string.

The following symbols are mutually exclusive as floating replacement symbols in one PICTURE character-string:

Z * + - *cs*

Specify zero suppression and replacement editing with a string of one or more of the allowable symbols to represent leftmost character positions in which zero suppression and replacement editing can be performed.

Any simple insertion symbols (B 0 / ,) within or to the immediate right of the string of floating editing symbols are considered part of the string. If the period (.) special insertion symbol is included within the floating editing string, it is considered to be part of the character-string.

Representing zero suppression

In a PICTURE character-string, there are two ways to represent zero suppression, and two ways in which editing is performed:

1. Any or all of the leading numeric character positions to the left of the decimal point are represented by suppression symbols. When editing is performed, the replacement character replaces any leading zero in the data that appears in the same character position as a suppression symbol. Suppression stops at the leftmost character:
   - That does not correspond to a suppression symbol
   - That contains nonzero data
   - That is the decimal point
2. All the numeric character positions in the PICTURE character-string are represented by the suppression symbols. When editing is performed and the value of the data is nonzero, the result is the same as in the preceding rule. If the value of the data is zero, then:
   - If Z has been specified, the entire data item will contain spaces.
   - If * has been specified, the entire data item except the actual decimal point will contain asterisks.

For example:

PICTURE	Value of data	Edited result
`****.**`	`0000.00`	`****.**`
`ZZZZ.ZZ`	`0000.00`	
`ZZZZ.99`	`0000.00`	`.00`
`****.99`	`0000.00`	`****.00`

PICTURE	Value of data	Edited result
ZZ99.99	0000.00	00.00
Z,ZZZ.ZZ+	+123.456	123.45+
*,***.**+	-123.45	**123.45-
,*,***.**+	+12345678.9	12,345,678.90+
$Z,ZZZ,ZZZ.ZZCR	+12345.67	$ 12,345.67
$B*,***,***.**BBDB	-12345.67	$ ***12,345.67 DB

Do not specify both the asterisk (*) as a suppression symbol and the BLANK WHEN ZERO clause for the same entry.

REDEFINES clause

The REDEFINES clause allows you to use different data description entries to describe the same computer storage area.

Format

```
►► level-number ──┬──────────────┬── REDEFINES ── data-name-2 ►◄
                  │ data-name-1  │
                  └── FILLER ────┘
```

(*level-number*, *data-name-1*, and FILLER are not part of the REDEFINES clause, and are included in the format only for clarity.)

When specified, the REDEFINES clause must be the first entry following *data-name-1* or FILLER. If *data-name-1* or FILLER is not specified, the REDEFINES clause must be the first entry following the level-number.

***data-name-1*, FILLER**

Identifies an alternate description for the data area identified by *data-name-2*; *data-name-1* is the *redefining* item or the REDEFINES *subject*.

Neither *data-name-1* nor any of its subordinate entries can contain a VALUE or a TYPE clause. *data-name-1* must not contain a TYPEDEF clause.

data-name-2

Identifies the *redefined* item or the REDEFINES *object*.

The data description entry for *data-name-2* can contain a REDEFINES clause.

The data description entry for *data-name-2* cannot contain an OCCURS clause. However, *data-name-2* can be subordinate to an item whose data description entry contains an OCCURS clause; in this case, the reference to *data-name-2* in the REDEFINES clause must not be subscripted.

The redefined entry, and any subordinate entries must not contain a TYPE clause.

Neither *data-name-1* nor *data-name-2* can contain an OCCURS DEPENDING ON clause.

data-name-1 and *data-name-2* must have the same level in the hierarchy; however, the level numbers need not be the same. Neither *data-name-1* nor *data-name-2* can be defined with level number 66 or 88.

data-name-1 and *data-name-2* can each be described with any usage.

Redefinition begins at *data-name-1* and ends when a level-number less than or equal to that of *data-name-1* is encountered. No entry that has a level-number numerically lower than those of *data-name-1* and *data-name-2* can occur between these entries. In the following example:

```
05  A PICTURE X(6).
05  B REDEFINES A.
    10 B-1          PICTURE X(2).
    10 B-2          PICTURE 9(4).
05  C               PICTURE 99V99.
```

A is the redefined item, and B is the redefining item. Redefinition begins with B and includes the two subordinate items B-1 and B-2. Redefinition ends when the level-05 item C is encountered.

If the GLOBAL clause is used in the data description entry that contains the REDEFINES clause, only *data-name-1* (the redefining item) possesses the global attribute. For example, in the following description, only item B1 possesses the GLOBAL attribute:

```
01 A1 PICTURE X(6).
01 B1 REDEFINES A1 GLOBAL PICTURE X(4).
```

The EXTERNAL clause must not be specified in the same data description entry as a REDEFINES clause.

If the redefined data item (*data-name-2*) is declared to be an external data record, the size of the redefining data item (*data-name-1*) must not be greater than the size of the redefined data item. If the redefined data item is not declared to be an external data record, there is no such constraint.

The following example shows that the redefining item, B2, can occupy more storage than the redefined item, A2. The size of storage for the REDEFINED clause is determined in number of bytes. Item A2 occupies 6 bytes of storage and item B2, a data item of category national, occupies 8 bytes of storage.

```
01 A2 PICTURE X(6).
01 B2 REDEFINES A2 GLOBAL PICTURE N(4).
```

One or more redefinitions of the same storage area are permitted. The entries that give the new descriptions of the storage area must immediately follow the description of the redefined area without intervening entries that define new character positions. Multiple redefinitions can, but need not, all use the data-name of the original entry that defined this storage area. For example:

```
05  A               PICTURE 9999.
05  B REDEFINES A   PICTURE 9V999.
05  C REDEFINES A   PICTURE 99V99.
```

Also, multiple redefinitions can use the name of the preceding definition as shown in the following example:

```
05  A               PICTURE 9999.
05  B REDEFINES A   PICTURE 9V999.
05  C REDEFINES B   PICTURE 99V99.
```

When more than one level-01 entry is written subordinate to an FD entry, a condition known as *implicit redefinition* occurs. That is, the second level-01 entry implicitly redefines the storage allotted for the first entry. In such level-01 entries, the REDEFINES clause must not be specified.

When more than one level-01 entry is written subordinate to an FD entry (and the level-01 entry is not a type-name), a condition known as *implicit redefinition* occurs. That is, the second level-01 entry implicitly redefines the storage allotted for the first entry. In such level-01 entries, neither the REDEFINES clause nor the TYPE clause can be specified. In addition, the TYPE clause must not be specified in any items subordinate to any of the level-01 entries.

When the data item implicitly redefines multiple 01-level records in a file description (FD) entry, items subordinate to the redefining or redefined item can contain an OCCURS DEPENDING ON clause.

REDEFINES clause considerations

The topic lists considerations of using the REDEFINES clause.

When an area is redefined, all descriptions of the area are always in effect; that is, redefinition does not supersede a previous description. Thus, if `B REDEFINES C` has been specified, either of the two procedural statements `MOVE X TO B` or `MOVE Y TO C` could be executed at any point in the program. In the first case, the area described as B would receive the value and format of X. In the second case, the same physical area (described now as C) would receive the value and format of Y. Note that if the second statement is executed immediately after the first, the value of Y replaces the value of X in the one storage area.

The usage of a redefining data item need not be the same as that of a redefined item. This does not, however, cause any change in the format or content of existing data. For example:

```
05  B                  PICTURE  99 USAGE DISPLAY VALUE 8.
05  C REDEFINES B      PICTURE S99 USAGE COMPUTATIONAL-4.
05  A                  PICTURE S99 USAGE COMPUTATIONAL-4.
```

Redefining B does not change the bit configuration of the data in the storage area. Therefore, the following two statements produce different results:

```
ADD B TO A
ADD C TO A
```

In the first case, the value 8 is added to A (because B has `USAGE DISPLAY`). In the second statement, the value -3848 is added to A (because C has `USAGE COMPUTATIONAL-4`), and the bit configuration of the storage area has the binary value -3848. This example demonstrates how the improper use of redefinition can give unexpected or incorrect results.

REDEFINES clause examples

The REDEFINES clause can be specified for an item within the scope of (subordinate to) an area that is redefined.

In the following example, `WEEKLY-PAY` redefines `SEMI-MONTHLY-PAY` (which is within the scope of `REGULAR-EMPLOYEE`, while `REGULAR-EMPLOYEE` is redefined by `TEMPORARY-EMPLOYEE`).

```
05  REGULAR-EMPLOYEE.
  10  LOCATION                      PICTURE A(8).
  10  GRADE                         PICTURE X(4).
  10  SEMI-MONTHLY-PAY              PICTURE 9999V99.
  10  WEEKLY-PAY REDEFINES SEMI-MONTHLY-PAY
                                    PICTURE 999V999.
05  TEMPORARY-EMPLOYEE REDEFINES REGULAR-EMPLOYEE.
  10  LOCATION                      PICTURE A(8).
  10  FILLER                        PICTURE X(6).
  10  HOURLY-PAY                    PICTURE 99V99.
```

The REDEFINES clause can also be specified for an item subordinate to a redefining item, as shown for `CODE-H REDEFINES HOURLY-PAY` in the following example:

```
05  REGULAR-EMPLOYEE.
```

```
  10  LOCATION                      PICTURE A(8).
  10  GRADE                         PICTURE X(4).
  10  SEMI-MONTHLY-PAY              PICTURE 999V999.
05  TEMPORARY-EMPLOYEE REDEFINES REGULAR-EMPLOYEE.
  10  LOCATION                      PICTURE A(8).
  10  FILLER                        PICTURE X(6).
  10  HOURLY-PAY                    PICTURE 99V99.
  10  CODE-H REDEFINES HOURLY-PAY   PICTURE 9999.
```

Data items within an area can be redefined without changing their lengths. For example:

```
05  NAME-2.
  10  SALARY              PICTURE XXX.
  10  SO-SEC-NO           PICTURE X(9).
  10  MONTH               PICTURE XX.
05  NAME-1 REDEFINES NAME-2.
  10  WAGE                PICTURE XXX.
  10  EMP-NO              PICTURE X(9).
  10  YEAR                PICTURE XX.
```

Data item lengths and types can also be respecified within an area. For example:

```
05  NAME-2.
  10  SALARY              PICTURE XXX.
  10  SO-SEC-NO           PICTURE X(9).
  10  MONTH               PICTURE XX.
05  NAME-1 REDEFINES NAME-2.
  10  WAGE                PICTURE 999V999.
  10  EMP-NO              PICTURE X(6).
  10  YEAR                PICTURE XX.
```

Data items can also be respecified with a length that is greater than the length of the redefined item. For example:

```
05  NAME-2.
  10  SALARY              PICTURE XXX.
  10  SO-SEC-NO           PICTURE X(9).
  10  MONTH               PICTURE XX.
05  NAME-1 REDEFINES NAME-2.
  10  WAGE                PICTURE 999V999.
  10  EMP-NO              PICTURE X(6).
  10  YEAR                PICTURE X(4).
```

This does not change the length of the redefined item `NAME-2`.

Undefined results

Undefined results can occur in the conditions as listed in the topic.

- A redefining item is moved to a redefined item (that is, if `B REDEFINES C` and the statement `MOVE B TO C` is executed).
- A redefined item is moved to a redefining item (that is, if `B REDEFINES C` and the statement `MOVE C TO B` is executed).

RENAMES clause

The RENAMES clause specifies alternative and possibly overlapping groupings of elementary data items.

Format

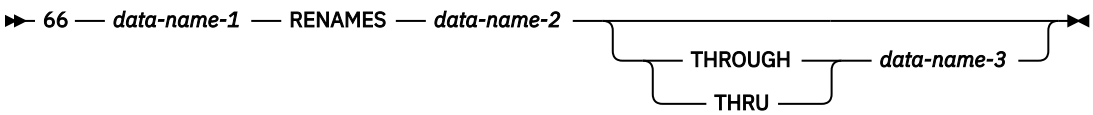

The special level-number 66 must be specified for data description entries that contain the RENAMES clause. (Level-number 66 and *data-name-1* are not part of the RENAMES clause, and are included in the format only for clarity.)

One or more RENAMES entries can be written for a logical record. All RENAMES entries associated with one logical record must immediately follow the last data description entry of that record.

data-name-1

Identifies an alternative grouping of data items.

A level-66 entry cannot rename a level-01, level-77, level-88, or another level-66 entry.

data-name-1 cannot be used as a qualifier; it can be qualified only by the names of level indicator entries or level-01 entries.

data-name-2, data-name-3

Identify the original grouping of elementary data items; that is, they must name elementary or group items within the associated level-01 entry and must not be the same data-name. Both data-names can be qualified.

data-name-2 and *data-name-3* can each reference any of the following items:

- An elementary data item
- An alphanumeric group item
- A national group item

When *data-name-2* or *data-name-3* references a national group item, the referenced item is processed as a group (not as an elementary data item of category national).

The OCCURS clause must not be specified in the data entries for *data-name-2* and *data-name-3*, or for any group entry to which they are subordinate. In addition, the OCCURS DEPENDING clause must not be specified for any item defined between *data-name-2* and *data-name-3*.

The TYPE clause must not be specified in the data descriptions of *data-name-2*, *data-name-3*, and items defined between *data-name-2*, *data-name-3*, or any subordinates of these items. If *data-name-2*, *data-name-3*, or any items defined between *data-name-2* and *data-name-3* are subordinate to a group item defined using the TYPE clause, then *data-name-1* must be subordinate to the same group item.

The keywords THROUGH and THRU are equivalent.

When the THROUGH phrase is specified:

- *data-name-1* defines an alphanumeric group item that includes all the elementary items that:
  - Start with *data-name-2* if it is an elementary item, or the first elementary item within *data-name-2* if it is a group item
  - End with *data-name-3* if it is an elementary item, or the last elementary item within *data-name-3* if it is an alphanumeric group item or national group item
- The storage area occupied by the starting item through the ending item becomes the storage area occupied by *data-name-1*.

Usage note: The group defined with the THROUGH phrase can include data items of usage NATIONAL.

The leftmost character position in *data-name-3* must not precede the leftmost character position in *data-name-2*, and the rightmost character position in *data-name-3* must not precede the rightmost character position in *data-name-2*. This means that *data-name-3* cannot be totally subordinate to *data-name-2*.

When the THROUGH phrase is not specified:

- The storage area occupied by *data-name-2* becomes the storage area occupied by *data-name-1*.
- All of the data attributes of *data-name-2* become the data attributes for *data-name-1*. That is:
  - When *data-name-2* is an alphanumeric group item, *data-name-1* is an alphanumeric group item.
  - When *data-name-2* is a national group item, *data-name-1* is a national group item.

– When *data-name-2* is an elementary item, *data-name-1* is an elementary item.

The following figure illustrates valid and invalid RENAMES clause specifications.

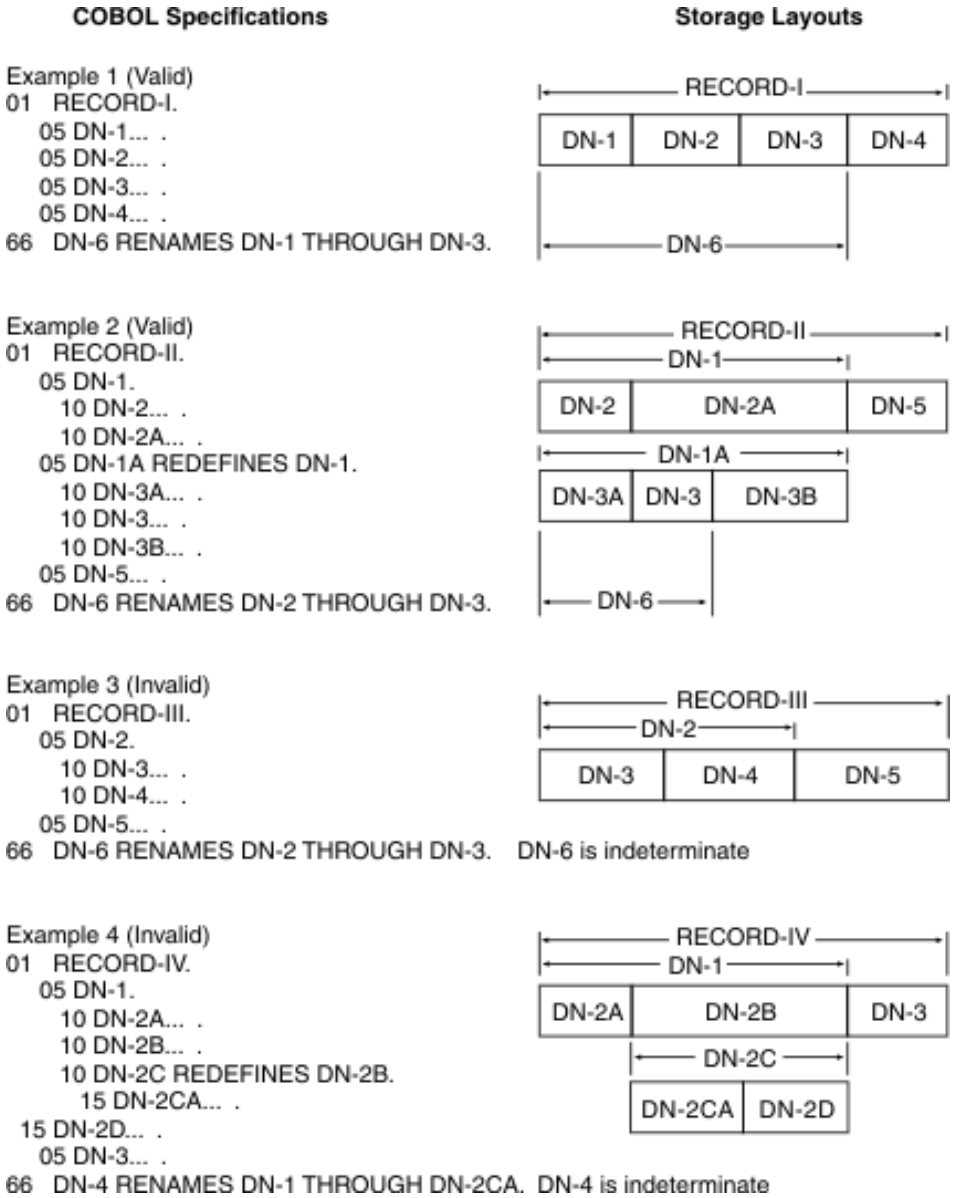

SIGN clause

The SIGN clause specifies the position and mode of representation of the operational sign for the signed numeric item to which it applies.

The SIGN clause is required only when an explicit description of the properties or position of the operational sign is necessary.

Format

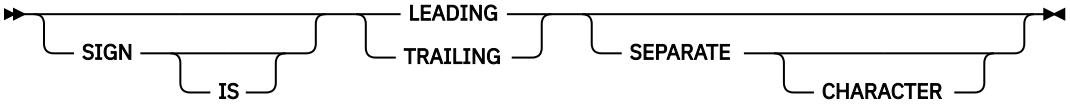

The SIGN clause can be specified only for the following items:

- An elementary numeric data item of usage DISPLAY or NATIONAL that is described with an S in its picture character string, or
- A group item that contains at least one such elementary entry as a subordinate item

When the SIGN clause is specified at the group level, that SIGN clause applies only to subordinate signed numeric elementary data items of usage DISPLAY or NATIONAL. Such a group can also contain items that are not affected by the SIGN clause. If the SIGN clause is specified for a group or elementary entry that is subordinate to a group item that has a SIGN clause, the SIGN clause for the subordinate entry takes precedence for that subordinate entry.

The SIGN clause is treated as documentation for external floating-point items.

When the SIGN clause is specified without the SEPARATE phrase, USAGE DISPLAY must be specified explicitly or implicitly. When SIGN IS SEPARATE is specified, either USAGE DISPLAY or USAGE NATIONAL can be specified.

If you specify the CODE-SET clause in an FD entry, any signed numeric data description entries associated with that file description entry must be described with the SIGN IS SEPARATE clause.

If the SEPARATE CHARACTER phrase is not specified, then:

- The operational sign is presumed to be associated with the LEADING or TRAILING digit position, whichever is specified, of the elementary numeric data item. (In this instance, specification of SIGN IS TRAILING is the equivalent of the standard action of the compiler.)
- The character S in the PICTURE character string is not counted in determining the size of the item (in terms of standard data format characters).

If the SEPARATE CHARACTER phrase is specified, then:

- The operational sign is presumed to be the LEADING or TRAILING character position, whichever is specified, of the elementary numeric data item. This character position is not a digit position.
- The character S in the PICTURE character string is counted in determining the size of the data item (in terms of standard data format characters).
- + is the character used for the positive operational sign.
- - is the character used for the negative operational sign.

The SEPARATE CHARACTER phrase cannot be specified for a date field.

The SIGN clause cannot be specified if the FORMAT clause is specified.

The TYPE clause cannot be specified in the same data description entry as the SIGN clause.

SYNCHRONIZED clause

The SYNCHRONIZED clause specifies the alignment of an elementary item on a natural boundary in storage.

Format

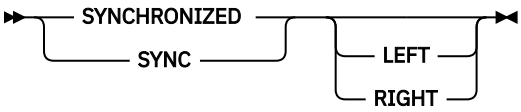

SYNC is an abbreviation for SYNCHRONIZED and has the same meaning.

The SYNCHRONIZED clause is never required, but can improve performance on some systems for binary items used in arithmetic.

The SYNCHRONIZED clause can be specified for elementary items and for level-01 group items, in which case every elementary item within the group item is synchronized.

LEFT
Specifies that the elementary item is to be positioned so that it will begin at the left character position of the natural boundary in which the elementary item is placed.

RIGHT
Specifies that the elementary item is to be positioned such that it will terminate on the right character position of the natural boundary in which it has been placed.

When specified, the LEFT and the RIGHT phrases are syntax checked but have no effect on the execution of the program.

The length of an elementary item is not affected by the SYNCHRONIZED clause.

The following table lists the effect of the SYNCHRONIZE clause on other language elements.

Table 21. ***SYNCHRONIZE clause effect on other language elements***

Language element	Comments
OCCURS clause	When specified for an item within the scope of an OCCURS clause, each occurrence of the item is synchronized.
USAGE DISPLAY or PACKED-DECIMAL	Each item is syntax checked, but the SYNCHRONIZED clause has no effect on execution.
USAGE NATIONAL	Each item is syntax checked, but the SYNCHRONIZED clause has no effect on execution.
USAGE BINARY or COMPUTATIONAL	When the item is the first elementary item subordinate to an item that contains a REDEFINES clause, the item must not require the addition of unused character positions. When the synchronized clause is not specified for a subordinate data item (one with a level number of 02 through 49): • The item is aligned at a displacement that is a multiple of 2 relative to the beginning of the record if its USAGE is BINARY and its PICTURE is in the range of S9 through S9(4). • The item is aligned at a displacement that is a multiple of 4 relative to the beginning of the record if its USAGE is BINARY and its PICTURE is in the range of S9(5) through S9(18), or its USAGE is INDEX. When SYNCHRONIZED is not specified for binary items, no space is reserved for slack bytes.
USAGE POINTER, PROCEDURE-POINTER, FUNCTION-POINTER	The data is aligned on a fullword boundary when the **ADDR(32)** compiler option is specified. The data is aligned on a doubleword boundary when the **ADDR(64)** compiler option is specified.
USAGE COMPUTATIONAL-1	The data is aligned on a fullword boundary.
USAGE COMPUTATIONAL-2	The data is aligned on a doubleword boundary.
USAGE COMPUTATIONAL-3	The data is treated the same as the SYNCHRONIZED clause for a PACKED-DECIMAL item.
USAGE COMPUTATIONAL-4	The data is treated the same as the SYNCHRONIZED clause for a COMPUTATIONAL item.
USAGE COMPUTATIONAL-5	The data is treated the same as the SYNCHRONIZED clause for a COMPUTATIONAL item.

Table 21. ***SYNCHRONIZE clause effect on other language elements*** *(continued)*	
Language element	**Comments**
DBCS and external floating-point items	Each item is syntax checked, but the SYNCHRONIZED clause has no effect on execution.

REDEFINES clause	For an item that contains a REDEFINES clause, the data item that is redefined must have the proper boundary alignment for the data item that redefines it. For example, if you write the following, be sure that data item A begins on a fullword boundary:
	`02 A PICTURE X(4).`
	`02 B REDEFINES A PICTURE S9(9) BINARY SYNC.`

FORMAT clause	Each item is syntax checked, but the SYNCHRONIZED clause has no effect on execution.

In the FILE SECTION, the compiler assumes that all level-01 records that contain SYNCHRONIZED items are aligned on doubleword boundaries in the buffer. You must provide the necessary slack bytes between records to ensure alignment when there are multiple records in a block.

In the WORKING-STORAGE SECTION, the compiler aligns all level-01 entries on a doubleword boundary.

For the purposes of aligning binary items in the LINKAGE SECTION, all level-01 items are assumed to begin on doubleword boundaries. Therefore, if you issue a CALL statement, such operands of any USING phrase within it must be aligned correspondingly.

The SYNCHRONIZED clause cannot be specified in the same data description entry as the TYPE clause.

Slack bytes

There are two types of slack bytes.

- Slack bytes *within* records: unused character positions that precede each synchronized item in the record
- Slack bytes *between* records: unused character positions added between blocked logical records

Slack bytes within records

For any data description that has binary items that are not on their natural boundaries, the compiler inserts slack bytes within a record to ensure that all SYNCHRONIZED items are on their proper boundaries.

Because it is important that you know the length of the records in a file, you need to determine whether slack bytes are required and, if so, how many bytes the compiler will add. The algorithm that the compiler uses is as follows:

- The total number of bytes occupied by all elementary data items that precede the binary item are added together, including any slack bytes that are previously added.
- This sum is divided by *m*, where:
  - *m* = 2 for binary items of four-digit length or less
  - *m* = 4 for binary items of five-digit length or more and for COMPUTATIONAL-1 data items
  - *m* = 4 or 8 for data items described with USAGE INDEX, USAGE POINTER, USAGE PROCEDURE-POINTER, or USAGE FUNCTION-POINTER
  - *m* = 8 for COMPUTATIONAL-2 data items
- If the remainder (*r*) of this division is equal to zero, no slack bytes are required. If the remainder is not equal to zero, the number of slack bytes that must be added is equal to *m* - *r*.

These slack bytes are added to each record immediately following the elementary data item that precedes the binary item. They are defined as if they constitute an item with a level-number equal to that of the elementary item that immediately precedes the SYNCHRONIZED binary item, and are included in the size of the group that contains them.

For example:

```
01  FIELD-A.
    05  FIELD-B                     PICTURE X(5).
    05  FIELD-C.
        10  FIELD-D                 PICTURE XX.
       [10  SLACK-BYTES              PICTURE X.  INSERTED BY COMPILER]
        10  FIELD-E  COMPUTATIONAL  PICTURE S9(6) SYNC.
01  FIELD-L.
    05  FIELD-M                     PICTURE X(5).
    05  FIELD-N                     PICTURE XX.
   [05  SLACK-BYTES                  PICTURE X.  INSERTED BY COMPILER]
    05  FIELD-O.
        10  FIELD-P COMPUTATIONAL   PICTURE S9(6) SYNC.
```

Slack bytes can also be added by the compiler when a group item is defined with an OCCURS clause and contains within it a SYNCHRONIZED binary data item. To determine whether slack bytes are to be added, the following action is taken:

- The compiler calculates the size of the group, including all the necessary slack bytes within a record.
- This sum is divided by the largest *m* required by any elementary item within the group.
- If *r* is equal to zero, no slack bytes are required. If *r* is not equal to zero, *m* - *r* slack bytes must be added.

The slack bytes are inserted at the end of each occurrence of the group item that contains the OCCURS clause. For example, a record defined as follows appears in storage, as shown, in the figure after the record:

```
01  WORK-RECORD.
    05  WORK-CODE                 PICTURE X.
    05  COMP-TABLE OCCURS 10 TIMES.
        10  COMP-TYPE             PICTURE X.
       [10  SLACK-BYTES            PIC XX.  INSERTED BY COMPILER]
        10  COMP-PAY              PICTURE S9(4)V99 COMP SYNC.
        10  COMP-HOURS            PICTURE S9(3) COMP SYNC.
        10  COMP-NAME             PICTURE X(5).
```

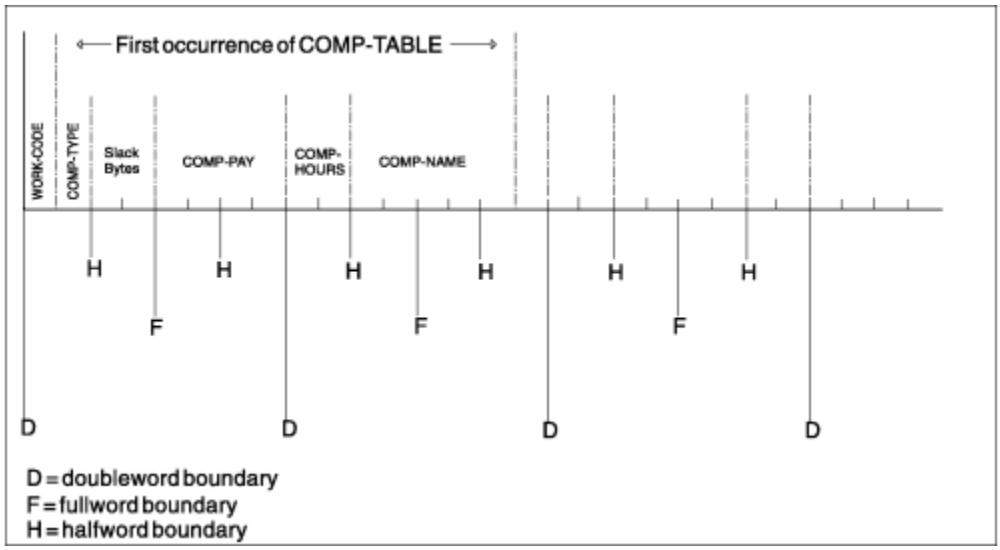

In order to align COMP-PAY and COMP-HOURS on their proper boundaries, the compiler added 2 slack bytes within the record.

In the previous example, without further adjustment, the second occurrence of COMP-TABLE would begin 1 byte before a doubleword boundary, and the alignment of COMP-PAY and COMP-HOURS would not be

valid for any occurrence of the table after the first. Therefore, the compiler must add slack bytes at the end of the group, as though the record had been written as follows:

```
01  WORK-RECORD.
    05  WORK-CODE                  PICTURE X.
    05  COMP-TABLE OCCURS 10 TIMES.
        10  COMP-TYPE              PICTURE X.
       [10  SLACK-BYTES            PIC XX.  INSERTED BY COMPILER]
        10  COMP-PAY               PICTURE S9(4)V99 COMP SYNC.
        10  COMP-HOURS             PICTURE S9(3)  COMP SYNC.
        10  COMP-NAME              PICTURE X(5).
       [10  SLACK-BYTES            PIC XX.  INSERTED BY COMPILER]
```

In this example, the second and each succeeding occurrence of COMP-TABLE begins 1 byte beyond a doubleword boundary. The storage layout for the first occurrence of COMP-TABLE now appears as shown in the following figure:

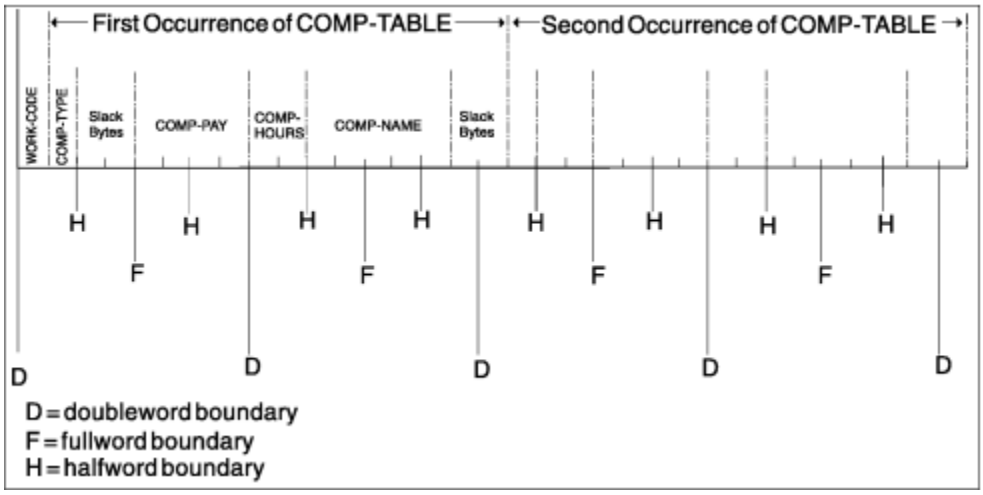

Each succeeding occurrence within the table will now begin at the same relative position as the first.

Slack bytes between records

The lengths of all the elementary data items in the record, including all slack bytes, are added. The total is then divided by the highest value of *m* for any one of the elementary items in the record.

If *r* (the remainder) is equal to zero, no slack bytes are required. If *r* is not equal to zero, *m* - *r* slack bytes are required. These slack bytes can be specified by writing a level-02 FILLER at the end of the record.

Consider the following record description:

```
01  COMP-RECORD.
    05  A-1    PICTURE X(5).
    05  A-2    PICTURE X(3).
    05  A-3    PICTURE X(3).
    05  B-1    PICTURE S9999  USAGE COMP SYNCHRONIZED.
    05  B-2    PICTURE S99999 USAGE COMP SYNCHRONIZED.
    05  B-3    PICTURE S9999  USAGE COMP SYNCHRONIZED.
```

The number of bytes in A-1, A-2, and A-3 totals 11. B-1 is a four-digit COMPUTATIONAL item and 1 slack byte must therefore be added before B-1. With this byte added, the number of bytes that precede B-2 totals 14. Because B-2 is a COMPUTATIONAL item of five digits in length, 2 slack bytes must be added before it. No slack bytes are needed before B-3.

The revised record description entry now appears as:

```
01  COMP-RECORD.
    05  A-1            PICTURE X(5).
    05  A-2            PICTURE X(3).
```

```
     05  A-3             PICTURE X(3).
    [05  SLACK-BYTE-1    PICTURE X.   INSERTED BY COMPILER]
     05  B-1             PICTURE S9999 USAGE COMP SYNCHRONIZED.
    [05  SLACK-BYTE-2    PICTURE XX.  INSERTED BY COMPILER]
     05  B-2             PICTURE S99999 USAGE COMP SYNCHRONIZED.
     05  B-3             PICTURE S9999  USAGE COMP SYNCHRONIZED.
```

There is a total of 22 bytes in COMP-RECORD, but from the rules above, it appears that *m* = 4 and *r* = 2. Therefore, to attain proper alignment for blocked records, you must add 2 slack bytes at the end of the record.

The final record description entry appears as:

```
01  COMP-RECORD.
     05  A-1              PICTURE X(5).
     05  A-2              PICTURE X(3).
     05  A-3              PICTURE X(3).
    [05  SLACK-BYTE-1     PICTURE X.   INSERTED BY COMPILER]
     05  B-1              PICTURE S9999 USAGE COMP SYNCHRONIZED.
    [05  SLACK-BYTE-2     PICTURE XX.  INSERTED BY COMPILER]
     05  B-2              PICTURE S99999 USAGE COMP SYNCHRONIZED.
     05  B-3              PICTURE S9999  USAGE COMP SYNCHRONIZED.
     05  FILLER           PICTURE XX.  [SLACK BYTES YOU ADD]
```

TYPE clause

The TYPE clause indicates that the data description of the subject of the entry is specified by a user-defined data type.

The user-defined data type is defined by using the TYPEDEF clause, which is described in the "TYPEDEF clause" on page 215.

Format

```
►►─ TYPE ── type-name-1 ─►◄
```

The following general rules apply:

- If *type-name-1* (defined using the TYPEDEF clause) describes a group item, then the subject of the TYPE clause is a group item whose subordinate elements have the same names, descriptions, and hierarchies as the subordinate elements of *type-name-1*.

  Note: Since the subject of the TYPE clause may have a level number as high as 49 and *type-name-1* may be a group item with 49 levels, the number of levels of this hierarchy may exceed 49. In fact, since descriptions of type-names may reference other type-names, there is no limit to the number of levels in this hierarchy.
- If a VALUE clause is specified in the data description of the subject of the TYPE clause, any VALUE clause specified in the description of *type-name-1* is ignored for this entry.
- The scoping rules for type names are similar to the scoping rules for data names.
- Reference modification is not allowed for an elementary item that is the subject of a TYPE clause.
- The description of *type-name-1*, including its subordinate data items, cannot contain a LIKE clause that references the subject of the TYPE clause (referencing *type-name-1*), or any group item to which the subject of the TYPE clause is subordinate.
- The description of *type-name-1*, including its subordinate data items, cannot contain a TYPE clause that references the record to which the subject of the TYPE clause (that references *type-name-1*), is subordinate

  For example, A is a group item defined using the TYPEDEF clause. B is also a group item defined using the TYPEDEF clause, but which also includes a subordinate item of TYPE A. This being the case, the type definition for A cannot include items of TYPE B.
- The subject of a TYPE clause cannot be renamed in whole, or in part.

- The subject of a TYPE clause cannot be redefined explicitly or implicitly.
- If the subject of a TYPE clause is subordinate to a group item, the data description of the group item cannot contain the USAGE clause.
- The TYPE clause cannot occur in a data description entry with the BLANK WHEN ZERO, FORMAT, JUSTIFIED, LIKE, PICTURE, REDEFINES, RENAMES, SIGN, SYNCHRONIZED, or USAGE clause.
- The TYPE clause can be specified in a data description entry with the EXTERNAL, GLOBAL, OCCURS, TYPEDEF, and VALUE clauses.

TYPEDEF clause

The TYPEDEF clause is used to create a new user-defined data type, type-name. The name of the new user-defined data type is the subject of the TYPEDEF clause.

data-name-1 must be specified with the TYPEDEF clause: FILLER cannot be used. The TYPEDEF clause must immediately follow *data-name-1*. After defining a new data type using the TYPEDEF clause, data items can be declared as this new data type using the TYPE clause. For more information about the TYPE clause, refer to "TYPE clause" on page 214.

Format

```
►►──┬──────────┬──TYPEDEF──►◄
    └──IS──────┘
```

The TYPEDEF clause can only be specified for level 01 entries, which can also be group items. If a group item is specified, all subordinate items of the group become part of the type declaration. No storage is allocated for a type declaration.

The TYPEDEF clause cannot be specified in the same data description entry as the following clauses:

- EXTERNAL
- REDEFINES
- LIKE

All of the other data description clauses, if they are specified, are assumed by any data item that is defined using the user-defined data type (within the TYPE clause).

TYPEDEF cannot be used with complex OCCURS DEPENDING ON. This means that you cannot specify an OCCURS DEPENDING ON clause within a table that is part of a TYPEDEF. For more information, see *Complex OCCURS DEPENDING ON* in the *COBOL for Linux on x86 Programming Guide*.

The TYPEDEF clause can only be specified in the WORKING-STORAGE, LOCAL-STORAGE, LINKAGE, or FILE sections of a program.

The TYPE clause can be specified in the same data description entry as the TYPEDEF clause.

USAGE clause

The USAGE clause specifies the format in which data is represented in storage.

Format 1

```
▶▶─┬─USAGE─┬─┬─BINARY──┬─NATIVE─┬──────────────
```

A USAGE clause must not be specified in a group level entry for which a GROUP-USAGE NATIONAL clause is specified.

When a GROUP-USAGE NATIONAL clause is specified or implied for a group level entry, USAGE NATIONAL must be specified or implied for every elementary item within the group. For details, see "GROUP-USAGE clause" on page 173.

When the USAGE clause is not specified at either the group or elementary level, a usage clause is implied with:

- Usage DISPLAY when the PICTURE clause contains only symbols other than G or N
- Usage NATIONAL when the PICTURE clause contains only one or more of the symbol N and the NSYMBOL(NATIONAL) compiler option is in effect
- Usage DISPLAY-1 when the PICTURE clause contains one or more of the symbol N and the NSYMBOL(DBCS) compiler option is in effect

For data items defined with the DATE FORMAT clause, only usage DISPLAY and COMP-3 (or its equivalents, COMPUTATIONAL-3 and PACKED-DECIMAL) are allowed. For details, see "Combining the DATE FORMAT clause with other clauses" on page 167.

The TYPE clause cannot be specified in the same data description entry as the USAGE clause.

Data description entries with a TYPE clause cannot be subordinate to a data description entry that contains a USAGE clause. For example, the following is illegal:

```
01 FLAGS   USAGE   DISPLAY.
   05 F-STATUS    TYPE CHAR.
   05 FLAG-ACTIVE TYPE CHAR.
```

Computational items

A computational item is a value used in arithmetic operations. It must be numeric. If a group item is described with a computational usage, the elementary items within the group have that usage.

The maximum length of a computational item is 18 decimal digits, except for a PACKED-DECIMAL item. If the ARITH(COMPAT) compiler option is in effect, then the maximum length of a PACKED-DECIMAL item is 18 decimal digits. If the ARITH(EXTEND) or ARITH(FULL) compiler option is in effect, then the maximum length of a PACKED-DECIMAL item is 31 decimal digits.

The PICTURE of a computational item can contain only:

9
: One or more numeric character positions

S
: One operational sign

V
: One implied decimal point

P
: One or more decimal scaling positions

COMPUTATIONAL-1 and COMPUTATIONAL-2 items (internal floating-point) cannot have PICTURE strings.

BINARY
: Specified for binary data items. Such items have a decimal equivalent consisting of the decimal digits 0 through 9, plus a sign. Negative numbers are represented as the two's complement of the positive number with the same absolute value.

  The amount of storage occupied by a binary item depends on the number of decimal digits defined in its PICTURE clause:

Digits in PICTURE clause	Storage occupied
1 through 4	2 bytes (halfword)
5 through 9	4 bytes (fullword)
10 through 18	8 bytes (doubleword)

By default, binary data uses the native binary representation format of the platform. On Linux systems, the native binary representation is *little-endian* format (least significant digit at the lowest address). See the BINARY compiler option if you wish to alter the endianness format for binary data items.

BINARY, COMPUTATIONAL, and COMPUTATIONAL-4 data items can be affected by the TRUNC compiler option. For information about the effect of this compiler option, see *TRUNC* in the *COBOL for Linux on x86 Programming Guide*.

PACKED-DECIMAL
Specified for internal decimal items. Such an item appears in storage in packed decimal format. There are two digits for each character position, except for the trailing character position, which is occupied by the low-order digit and the sign. Such an item can contain any of the digits 0 through 9, plus a sign, representing a value not exceeding 18 decimal digits.

The sign representation uses the same bit configuration as the 4-bit sign representation in zoned decimal fields. For details, see *Sign representation of zoned and packed-decimal data* in the *COBOL for Linux on x86 Programming Guide*.

PACKED-DECIMAL may also be specified for date and time items whose FORMAT literal contains only conversion specifiers. These conversion specifiers must only be able to contain numeric digits.

COMPUTATIONAL or COMP (binary)
This is the equivalent of BINARY. The COMPUTATIONAL phrase is synonymous with BINARY.

COMPUTATIONAL-1 or COMP-1 (floating-point)
Specified for internal floating-point items (single precision). COMP-1 items are 4 bytes long.

COMP-1 data items are affected by the FLOAT(NATIVE|BE|LE) compiler option. For details, see *FLOAT* in the *COBOL for Linux on x86 Programming Guide*.

COMPUTATIONAL-2 or COMP-2 (long floating-point)
Specified for internal floating-point items (double precision). COMP-2 items are 8 bytes long.

COMP-2 data items are affected by the FLOAT(NATIVE|BE|LE) compiler option. For details, see *FLOAT* in the *COBOL for Linux on x86 Programming Guide*.

COMPUTATIONAL-3 or COMP-3 (internal decimal)
This is the equivalent of PACKED-DECIMAL.

COMPUTATIONAL-4 or COMP-4 (binary)
This is the equivalent of BINARY.

COMPUTATIONAL-5 or COMP-5 (native binary)
These data items are represented in storage as binary data. The data items can contain values up to the capacity of the native binary representation (2, 4, or 8 bytes), rather than being limited to the value implied by the number of nines in the picture for the item (as is the case for USAGE BINARY data). When numeric data is moved or stored into a COMP-5 item, truncation occurs at the binary field size rather than at the COBOL picture size limit. When a COMP-5 item is referenced, the full binary field size is used in the operation.

The TRUNC(BIN) compiler option causes all binary data items (USAGE BINARY, COMP, COMP-4) to be handled as if they were declared USAGE COMP-5.

The following table shows several picture character strings, the resulting storage representation, and the range of values for data items described with USAGE COMP-5.

Picture	Storage representation	Numeric values
S9(1) through S9(4)	Binary halfword (2 bytes)	-32768 through +32767
S9(5) through S9(9)	Binary fullword (4 bytes)	-2,147,483,648 through +2,147,483,647
S9(10) through S9(18)	Binary doubleword (8 bytes)	-9,223,372,036,854,775,808 through +9,223,372,036,854,775,807
9(1) through 9(4)	Binary halfword (2 bytes)	0 through 65535
9(5) through 9(9)	Binary fullword (4 bytes)	0 through 4,294,967,295
9(10) through 9(18)	Binary doubleword (8 bytes)	0 through 18,446,744,073,709,551,615

The picture for a COMP-5 data item can specify a scaling factor (that is, decimal positions or implied integer positions). In this case, the maximal capacities listed in the table above must be scaled appropriately. For example, a data item described with PICTURE S99V99 COMP-5 is represented in storage as a binary halfword, and supports a range of values from -327.68 to +327.67.

USAGE NOTE: When the ON SIZE ERROR phrase is used on an arithmetic statement and a receiver is defined with USAGE COMP-5, the maximum value that the receiver can contain is the value implied by the item's decimal PICTURE character-string. Any attempt to store a value larger than this maximum will result in a size error condition.

DISPLAY phrase

The data item is stored in character form, one character for each 8-bit byte. This corresponds to the format used for printed output. DISPLAY can be explicit or implicit.

USAGE IS DISPLAY is valid for the following types of items:

- Alphabetic
- Alphanumeric
- Alphanumeric-edited
- Boolean
- Date, time, and timestamp
- Numeric-edited
- External floating-point
- External decimal

Alphabetic, alphanumeric, alphanumeric-edited, boolean, and numeric-edited items are discussed in "Data categories and PICTURE rules" on page 190.

External decimal items with USAGE DISPLAY are sometimes referred to as *zoned decimal* items. Each digit of a number is represented by a single byte. The 4 high-order bits of each byte are zone bits; the 4 high-order bits of the low-order byte represent the sign of the item. The 4 low-order bits of each byte contain the value of the digit.

If the ARITH(COMPAT) compiler option is in effect, then the maximum length of an external decimal item is 18 digits. If the ARITH(EXTEND) or ARITH(FULL) compiler option is in effect, then the maximum length of an external decimal item is 31 digits.

The PICTURE character-string of an external decimal item can contain only:

- One or more of the symbol 9
- The operational-sign, S
- The assumed decimal point, V

- One or more of the symbol P

Effect of CHAR(EBCDIC) compiler option

Data items defined with the DISPLAY or DISPLAY-1 phrase are treated as EBCDIC when the CHAR(EBCDIC) compiler option is used, unless the character data is defined with the NATIVE phrase.

DISPLAY-1 phrase

The DISPLAY-1 phrase defines an item as DBCS. The data item is stored in character form, with each character occupying 2 bytes of storage.

FUNCTION-POINTER phrase

The FUNCTION-POINTER phrase defines an item as a *function-pointer data item*. A function-pointer data item can contain the address of a descriptor for a procedure entry point.

A function-pointer is a 4-byte elementary item or an 8-byte elementary item depending on whether the **ADDR(32)** or **ADDR(64)** compiler option is in effect. Function-pointers have the same capabilities as procedure-pointers. Function-pointers are easily interoperable with C function pointers.

A function-pointer can point to a function descriptor for one of the following or can contain NULL:

- The primary entry point of a COBOL program, defined by the PROGRAM-ID paragraph of the outermost program
- An alternate entry point of a COBOL program, defined by a COBOL ENTRY statement
- An entry point in a non-COBOL program

A VALUE clause for a function-pointer data item can contain only NULL or NULLS.

A function-pointer can be used in the same contexts as a procedure-pointer, as defined in "PROCEDURE-POINTER phrase" on page 222.

INDEX phrase

A data item defined with the INDEX phrase is an *index data item*.

An *index data item* is a 4-byte elementary item or an 8-byte elementary item depending on whether the **ADDR(32)** or **ADDR(64)** compiler option is in effect, that can be used to save index-name values for future reference. An *index data item* is not necessarily connected with any specific table. Through a SET statement, an index data item can be assigned an index-name value. Such a value corresponds to the occurrence number in a table.

Direct references to an index data item can be made only in a SEARCH statement, a SET statement, a relation condition, the USING phrase of the PROCEDURE DIVISION header, or the USING phrase of the CALL or ENTRY statement.

An index data item can be part of an alphanumeric group item that is referenced in a MOVE statement or an input/output statement.

An index data item saves values that represent table occurrences, yet is not necessarily defined as part of any table. There is no conversion of values when an index data item is referenced in the following circumstances:

- directly in a SEARCH or SET statement
- indirectly in a MOVE statement
- indirectly in an input or output statement

An index data item cannot be a conditional variable.

The DATE FORMAT, JUSTIFIED, PICTURE, BLANK WHEN ZERO, VALUE, TYPE, or FORMAT clauses cannot be used to describe a group item or elementary items described with the USAGE IS INDEX clause.

SYNCHRONIZED can be used with USAGE IS INDEX to obtain efficient use of the index data item.

NATIONAL phrase

The NATIONAL phrase defines an item whose content is represented in storage in UTF-16 (CCSID 1200). The class and category of the data item depend on the picture symbols that are specified in the associated PICTURE clause.

POINTER phrase

A data item defined with USAGE IS POINTER is a *pointer data item*. A *pointer data item* is a 4-byte elementary item or an 8-byte elementary item depending on whether the **ADDR(32)** or **ADDR(64)** compiler option is in effect.

You can use pointer data items to accomplish limited base addressing. Pointer data items can be compared for equality or moved to other pointer items.

A pointer data item can be used only:

- In a SET statement (format 5 and format 8 only)
- In a relation condition
- In the USING phrase of a CALL statement, an ENTRY statement, or the PROCEDURE DIVISION header

Pointer data items can be part of an alphanumeric group that is referred to in a MOVE statement or an input/output statement. However, if a pointer data item is part of a group, there is no conversion of values when the statement is executed.

A pointer data item can be the subject or object of a REDEFINES clause.

SYNCHRONIZED can be used with USAGE IS POINTER to obtain efficient use of the pointer data item.

A VALUE clause for a pointer data item can contain only NULL or NULLS.

A pointer data item cannot be a conditional variable.

A pointer data item does not belong to any class or category.

The following table lists clauses that can or cannot be used to describe group or elementary items defined with the USAGE IS POINTER.

Table 22. Clauses that can or cannot be used with USAGE IS POINTER

Can be used with USAGE IS POINTER	Cannot be used with USAGE IS POINTER
GLOBAL clause EXTERNAL clause OCCURS clause LIKE clause	DATE FORMAT clause JUSTIFIED clause PICTURE clause BLANK WHEN ZERO clause TYPE clause FORMAT clause

Pointer data items are ignored in the processing of a CORRESPONDING phrase.

A pointer data item can be written to a file, but upon subsequent reading of the record that contains the pointer, the address contained might no longer represent a valid pointer.

USAGE IS POINTER is implicitly specified for the ADDRESS OF special register. For more information, see *Using tables (arrays) and pointers* in the *COBOL for Linux on x86 Programming Guide*.

PROCEDURE-POINTER phrase

The PROCEDURE-POINTER phrase defines an item as a *procedure-pointer data item*. A procedure-pointer data item can contain the address of a descriptor for a procedure entry point.

A procedure-pointer data item is a 4-byte elementary item or an 8-byte elementary item depending on whether the **ADDR(32)** or **ADDR(64)** compiler option is in effect.

A procedure-pointer can point to a function descriptor for one of the following or can contain NULL:

- The primary entry point of a COBOL program as defined by the program-ID paragraph of the outermost program of a compilation unit
- An alternate entry point of a COBOL program as defined by a COBOL ENTRY statement
- An entry point in a non-COBOL program

A procedure-pointer data item can be used only:

- In a SET statement (format 6 only)
- In a CALL statement
- In a relation condition
- In the USING phrase of an ENTRY statement or the PROCEDURE DIVISION header

Procedure-pointer data items can be compared for equality or moved to other procedure-pointer data items.

Procedure-pointer data items can be part of a group that is referred to in a MOVE statement or an input/output statement. However, there is no conversion of values when the statement is executed. If a procedure-pointer data item is written to a file, subsequent reading of the record that contains the procedure-pointer can result in an invalid value in the procedure-pointer.

A procedure-pointer data item can be the subject or object of a REDEFINES clause.

SYNCHRONIZED can be used with USAGE IS PROCEDURE-POINTER to obtain efficient alignment of the procedure-pointer data item.

The GLOBAL, EXTERNAL, OCCURS, and LIKE clauses can be used with USAGE IS PROCEDURE-POINTER.

A VALUE clause for a procedure-pointer data item can contain only NULL or NULLS.

The DATE FORMAT, JUSTIFIED, PICTURE, FORMAT, TYPE, and BLANK WHEN ZERO clauses cannot be used to describe group or elementary items defined with the USAGE IS PROCEDURE-POINTER clause.

A procedure-pointer data item cannot be a conditional variable.

A procedure-pointer data item does not belong to any class or category.

Procedure-pointer data items are ignored in CORRESPONDING operations.

NATIVE phrase

By using the NATIVE phrase, you can mix characters and floating-point data as represented on the z/OS® or OS/390® and Linux platforms. The NATIVE phrase overrides the CHAR(EBCDIC) and FLOAT(BE) compiler options, which indicate host data type usages.

The use of both host and native data types within a program (ASCII and EBCDIC, and IEEE floating-point) is valid only for those data items specifically defined with the NATIVE phrase.

Specifying NATIVE does not change the class or the category of the data item.

Numeric data items are processed in arithmetic operations (numeric comparisons, arithmetic expressions, assignment to numeric targets, arithmetic statements) based on their logical numeric values, regardless of their internal representations.

Characters are converted to the representation of the target item prior to an assignment.

Comparisons are done based on the collating sequence rules applicable to the operands. If native and non-native alphanumeric or DBCS characters are compared, the comparison is based on the COLLSEQ option in effect.

VALUE clause

The VALUE clause specifies the initial contents of a data item or the values associated with a condition-name. The use of the VALUE clause differs depending on the DATA DIVISION section in which it is specified.

A VALUE clause that is used in the FILE SECTION or the LINKAGE SECTION in an entry other than a condition-name entry is syntax checked, but has no effect on the execution of the program.

In the WORKING-STORAGE SECTION and the LOCAL-STORAGE SECTION, the VALUE clause can be used in condition-name entries or in specifying the initial value of any data item. The data item assumes the specified value at the beginning of program execution. If the initial value is not explicitly specified, the value is unpredictable.

Format 1

Format 1 specifies the initial value of a data item. Initialization is independent of any BLANK WHEN ZERO or JUSTIFIED clause that is specified.

Format 1: literal value

```
►► VALUE ──┬──────┬── literal ──►◄
           └─ IS ─┘
```

A format-1 VALUE clause specified in a data description entry that contains or is subordinate to an OCCURS clause causes every occurrence of the associated data item to be assigned the specified value. Each structure that contains the DEPENDING ON phrase of the OCCURS clause is assumed to contain the maximum number of occurrences for the purposes of VALUE initialization.

The VALUE clause must not be specified for a data description entry that contains or is subordinate to an entry that contains either an EXTERNAL or a REDEFINES clause. This rule does not apply to condition-name entries.

A format-1 VALUE clause can be specified for an elementary data item or for a group item. When the VALUE clause is specified at the group level, the group area is initialized without consideration for the subordinate entries within the group. In addition, a VALUE clause must not be specified for subordinate entries within the group.

For group items, the VALUE clause must not be specified if any subordinate entries contain a JUSTIFIED or SYNCHRONIZED clause.

If the VALUE clause is specified for an alphanumeric group, all subordinate items must be explicitly or implicitly described with USAGE DISPLAY.

The VALUE clause must not conflict with other clauses in the data description entry or in the data description of that entry's hierarchy.

The functions of the editing characters in a PICTURE clause are ignored in determining the initial value of the item described. However, editing characters are included in determining the size of the item. Therefore, any editing characters must be included in the literal. For example, if the item is defined as PICTURE +999.99 and the value is to be +12.34, then the VALUE clause should be specified as VALUE "+012.34".

A VALUE clause cannot be specified for external floating-point items.

A VALUE clause may be specified in the data description entry for a type-name. Such a VALUE clause is used to initialize any data name (which is not a type-name), that is defined using a TYPE clause that references such a type-name. If a VALUE clause is specified in the data description of the subject of a

TYPE clause, any VALUE clause specified in the description of the associated type-name is ignored for this entry.

A data item cannot contain a VALUE clause if the prior data item contains an OCCURS clause with the DEPENDING ON phrase.

A VALUE clause associated with a date, time, or timestamp item must be a non-numeric literal. The literal is aligned according to alignment rules. No formatting of the literal is done to match conversion specifiers or LOCALE definition, except if the USAGE of the item is PACKED-DECIMAL, in which case the non-numeric literal is converted to packed.

Rules for literal values

- Wherever a literal is specified, a figurative constant can be substituted, in accordance with the rules specified in "Figurative constants" on page 15.
- If the item is class numeric, the VALUE clause literal must be numeric. If the literal defines the value of a WORKING-STORAGE item or LOCAL-STORAGE item, the literal is aligned according to the rules for numeric moves, with one additional restriction: The literal must not have a value that requires truncation of nonzero digits. If the literal is signed, the associated PICTURE character-string must contain a sign symbol.
- With some exceptions, numeric literals in a VALUE clause must have a value within the range of values indicated by the PICTURE clause for the item. For example, for PICTURE 99PPP, the literal must be zero or within the range 1000 through 99000. For PICTURE PPP99, the literal must be within the range 0.00000 through 0.00099.

  The exceptions are the following ones:

  – Data items described with usage COMP-5 that do not have a picture symbol P in their PICTURE clause.
  – When the TRUNC(BIN) compiler option is in effect, data items described with usage BINARY, COMP, or COMP-4 that do not have a picture symbol P in their PICTURE clause.

    A VALUE clause for these items can have a value up to the capacity of the native binary representation.
- If the VALUE clause is specified for an elementary alphabetic, alphanumeric, alphanumeric-edited, or numeric-edited item described with usage DISPLAY, the VALUE clause literal must be an alphanumeric literal or a figurative constant. The literal is aligned according to the alphanumeric alignment rules, with one additional restriction: the number of characters in the literal must not exceed the size of the item.
- If the VALUE clause is specified for an elementary national, national-edited, or numeric-edited item described with usage NATIONAL, the VALUE clause literal must be a national or alphanumeric literal or a figurative constant as specified in "Figurative constants" on page 15. The value of an alphanumeric literal is converted from its source code representation to UTF-16 representation. The literal is aligned according to the national alignment rules, with one additional restriction: the number of characters in the literal must not exceed the size, in character positions, of the item.
- If the VALUE clause is specified at the group level for an alphanumeric group, the literal must be an alphanumeric literal or a figurative constant as specified in "Figurative constants" on page 15, other than ALL *national-literal* . The size of the literal must not exceed the size of the group item.
- If the VALUE clause is specified at the group level for a national group, the literal can be an alphanumeric literal, a national literal, or one of the figurative constants ZERO, SPACE, QUOTES, HIGH-VALUE, LOW-VALUE, *symbolic character*, ALL *national-literal*, or ALL *-literal*. The value of an alphanumeric literal is converted from its source code representation to UTF-16 representation. Each figurative constant represents a national character value. The size of the literal must not exceed the size of the group item.
- A VALUE clause associated with a DBCS item must contain a DBCS literal, the figurative constant SPACE, or the figurative constant ALL *DBCS-literal*. The length of the literal must not exceed the size indicated by the data item's PICTURE clause.
- A VALUE clause that specifies a national literal can be associated only with a data item of class national.

- A VALUE clause that specifies a DBCS literal can be associated only with a data item of class DBCS.
- A VALUE clause associated with a COMPUTATIONAL-1 or COMPUTATIONAL-2 (internal floating-point) item must specify a floating-point literal. In addition, the figurative constant ZERO and both integer and decimal forms of the zero literal can be specified in a floating-point VALUE clause.

  You cannot specify a floating-point format numeric literal in the VALUE clause of a fixed-point numeric item.

  For information about floating-point literal values, see “Rules for floating-point literal values” on page 34.
- If the item is boolean, the VALUE clause must be a boolean literal.

Format 2

This format associates a value, values, or ranges of values with a condition-name. Each such condition-name requires a separate level-88 entry. Level-number 88 and the condition-name are not part of the format-2 VALUE clause itself. They are included in the format only for clarity.

Format 2: condition-name value

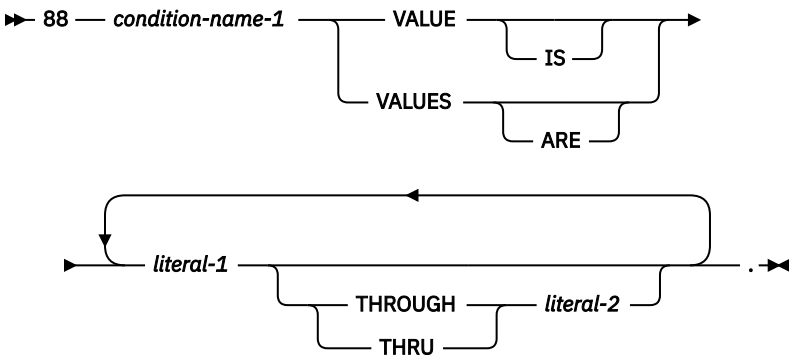

condition-name-1

A user-specified name that associates a value with a conditional variable. If the associated conditional variable requires subscripts or indexes, each procedural reference to the condition-name must be subscripted or indexed as required for the conditional variable.

Condition-names are tested procedurally in condition-name conditions (see “Conditional expressions” on page 240).

literal-1

Associates the condition-name with a single value.

The class of *literal-1* must be a valid class for assignment to the associated conditional variable.

literal-1* THROUGH *literal-2

Associates the condition-name with at least one range of values. When the THROUGH phrase is used, *literal-1* must be less than *literal-2*, unless the associated data item is a non-year-last windowed date field. For details, see “Rules for condition-name entries” on page 226.

literal-1 and *literal-2* must be of the same class. The class of *literal-1* and *literal-2* must be a valid class for assignment to the associated conditional variable.

The range of alphanumeric literals, national literals, or DBCS literals specified for the THROUGH phrase is based on the collating sequence in effect for the associated conditional variable. For more information about collating sequences, see “Locale considerations” on page 635.

If the associated conditional variable is of class DBCS, *literal-1* and *literal-2* must be DBCS literals. The figurative constant SPACE or the figurative constant ALL *DBCS-literal* can be specified.

If the associated conditional variable is of class NATIONAL, *literal-1* and *literal-2* must be either both national literals or both alphanumeric literals for a given condition-name. The figurative constants ZERO, SPACE, QUOTE, HIGH-VALUE, LOW-VALUE, *symbolic-character*, ALL *national-literal*, or ALL *literal* can be specified.

Rules for condition-name entries

There are certain rules for condition-name entries.

The rules are:

- The VALUE clause is required in a condition-name entry, and must be the only clause in the entry. Each condition-name entry is associated with a preceding conditional variable. Thus every level-88 entry must always be preceded either by the entry for the conditional variable or by another level-88 entry when several condition-names apply to one conditional variable. Each such level-88 entry implicitly has the PICTURE characteristics of the conditional variable.
- A space, a separator comma, or a separator semicolon must separate successive operands.

  Each entry must end with a separator period.
- The keywords THROUGH and THRU are equivalent.
- The condition-name entries associated with a particular conditional variable must immediately follow the conditional variable entry. The conditional variable can be any elementary data description entry except the following ones:
  - Another condition-name
  - A RENAMES clause (level-66 item)
  - An item described with USAGE IS INDEX
  - An item described with USAGE POINTER, USAGE PROCEDURE-POINTER, or USAGE FUNCTION-POINTER
- Condition-names can be specified both at the group level and at subordinate levels within an alphanumeric group, or national group.
- When the condition-name is specified for an alphanumeric group data description entry:
  - The value of *literal-1* (or *literal-1* and *literal-2*) must be specified as an alphanumeric literal or figurative constant.
  - The group can contain items of any usage.
- When the condition-name is specified for a national group data description entry:
  - The value of *literal-1* (or *literal-1* and *literal-2*) must be specified as an alphanumeric literal, a national literal, or a figurative constant.
  - The group can contain only items of usage national, as specified for the "GROUP-USAGE clause" on page 173.
- When the condition-name is associated with an alphanumeric group data description entry or a national group data description entry :
  - The size of each literal value must not exceed the sum of the sizes of all the elementary items within the group.
  - No element within the group can contain a JUSTIFIED or SYNCHRONIZED clause.
- Relation tests implied by the definition of a condition-name are performed in accordance with the rules referenced in the table below.

Table 23. ***Relation test references for condition-names***	
Type of conditional variable	**Relation condition rules**
Alphanumeric group item	“Group comparisons” on page 252
National group item (treated as elementary data item of class national)	“National comparisons” on page 250
Elementary data item of class alphanumeric	“Alphanumeric comparisons” on page 249
Elementary data item of class national	“National comparisons” on page 250
Elementary data item of class numeric	“Numeric comparisons” on page 251
Elementary data item of class DBCS	“DBCS comparisons” on page 250

- A VALUE clause that specifies a national literal can be associated with a condition-name defined only for a data item of class national.
- A VALUE clause that specifies a DBCS literal can be associated with a condition-name defined only for a data item of class DBCS.
- The literals in a condition-name entry for an elementary data item of class national or a national group item must be either national literals or alphanumeric literals, and *literal-1* and *literal-2* must be of the same class. For alphanumeric groups or elementary data items of other classes, the type of literal must be consistent with the data type of the conditional variable. In the following example:
  - CITY-COUNTY-INFO, COUNTY-NO, and CITY are conditional variables.

    The PICTURE associated with COUNTY-NO limits the condition-name value to a two-digit numeric literal.

    The PICTURE associated with CITY limits the condition-name value to a three-character alphanumeric literal.
  - The associated condition-names are level-88 entries.

    Any values for the condition-names associated with CITY-COUNTY-INFO cannot exceed five characters.

    Because this is an alphanumeric group item, the literal must be alphanumeric.

```
05  CITY-COUNTY-INFO.
    88  BRONX                   VALUE "03NYC".
    88  BROOKLYN                VALUE "24NYC".
    88  MANHATTAN               VALUE "31NYC".
    88  QUEENS                  VALUE "41NYC".
    88  STATEN-ISLAND           VALUE "43NYC".
  10  COUNTY-NO                 PICTURE 99.
      88  KINGS                 VALUE 24.
      88  NEW-YORK              VALUE 31.
      88  RICHMOND              VALUE 43.
  10  CITY                      PICTURE X(3).
      88  BUFFALO               VALUE "BUF".
      88  NEW-YORK-CITY         VALUE "NYC".
      88  POUGHKEEPSIE          VALUE "POK".
05  POPULATION...
```

- A condition-name can be associated with a date, time, or timestamp item. In this case:
  - The condition-name value must be specified as a non-numeric literal.
  - Each condition-name implicitly has the FORMAT characteristics of the conditional variable. Thus, any relation test involving this condition-name is performed in accordance with the rules for comparing items of class date-time.
  - A THROUGH phrase can be specified when a conditional variable is of class date-time. In this case, the time or date of *literal-1* must be less than *literal-2*.
- If the item is a windowed date field, the following restrictions apply:
  - For alphanumeric conditional variables:

- Both *literal-1* and *literal-2* (if specified) must be alphanumeric literals of the same length as the conditional variable.
- The literals must not be specified as figurative constants.
- If *literal-2* is specified, both literals must contain only decimal digits.

– If the YEARWINDOW compiler option is specified as a negative integer, *literal-2* must not be specified.

– If *literal-2* is specified, *literal-1* must be less than *literal-2* after applying the century window specified by the YEARWINDOW compiler option. That is, the expanded date value of *literal-1* must be less than the expanded date value of *literal-2*.

For more information about using condition-names with windowed date fields, see Condition-name conditions and windowed date field comparisons.

Format 3

This format assigns an invalid address as the initial value of an item defined as USAGE POINTER, USAGE PROCEDURE-POINTER, or USAGE FUNCTION-POINTER.

Format 3: NULL value

```
►► VALUE ──┬──────┬──┬──────┬── NULL ──┬──►◄
           └─ IS ─┘  └─ NULLS ─┘
```

VALUE IS NULL can be specified only for elementary items described implicitly or explicitly as USAGE POINTER, USAGE PROCEDURE-POINTER, or USAGE FUNCTION-POINTER.

Part 6. Procedure division

© Copyright IBM Corp. 2021, 2025

Chapter 19. Procedure division structure

The PROCEDURE DIVISION is an optional division.

Program procedure division

The program procedure division consists of optional declaratives, and procedures that contain sections, paragraphs, sentences, and statements.

Format: procedure division

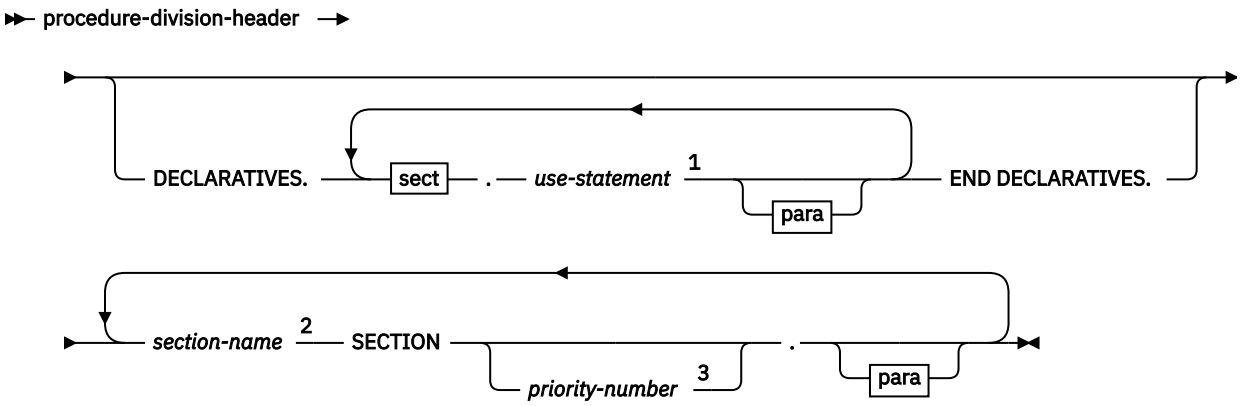

sect

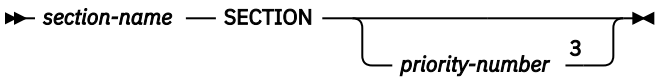

para

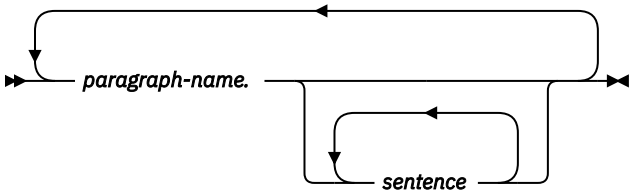

Notes:

[1] The USE statement is described under "USE statement" on page 581.

[2] *Section-name* can be omitted. If you omit *section-name*, *paragraph-name* can be omitted.

[3] Priority-numbers are not valid for recursive programs.

© Copyright IBM Corp. 2021, 2025

The PROCEDURE DIVISION header

The PROCEDURE DIVISION, if specified is identified by the following program procedure division header.

Format: program procedure division header

```
►► PROCEDURE DIVISION ►
   ►──┬──────────────
```

A given identifier can appear more than once in a USING phrase. The last value passed to it by a CALL statement is used.

The BY REFERENCE or BY VALUE phrase applies to all parameters that follow until overridden by another BY REFERENCE or BY VALUE phrase.

BY REFERENCE
When an argument is passed BY CONTENT or BY REFERENCE, BY REFERENCE must be specified or implied for the corresponding formal parameter on the PROCEDURE or ENTRY USING phrase.

BY REFERENCE is the default if neither BY REFERENCE nor BY VALUE is specified.

If the reference to the corresponding data item in the CALL statement declares the parameter to be passed BY REFERENCE (explicit or implicit), the program executes as if each reference to a USING identifier in the called subprogram is replaced by a reference to the corresponding USING identifier in the calling program.

If the reference to the corresponding data item in the CALL statement declares the parameter to be passed BY CONTENT, the value of the item is moved when the CALL statement is executed and placed into a system-defined storage item that possesses the attributes declared in the LINKAGE SECTION for *data-name-1*. The data description of each parameter in the BY CONTENT phrase of the CALL statement must be the same, meaning no conversion or extension or truncation, as the data description of the corresponding parameter in the USING phrase of the header.

BY VALUE
When an argument is passed BY VALUE, the value of the argument is passed, not a reference to the sending data item. The receiving subprogram has access only to a temporary copy of the sending data item. Any modifications made to the formal parameters that correspond to an argument passed BY VALUE do not affect the argument. See *Passing data* in the *COBOL for Linux on x86 Programming Guide* for examples that illustrate these concepts.

data-name-1
data-name-1 must be a level-01 or level-77 item in the LINKAGE SECTION.

GIVING/RETURNING phrase

The GIVING/RETURNING phrase specifies a data item that is to receive the program result. RETURNING and GIVING are equivalent.

data-name-2
data-name-2 is the RETURNING data item. *data-name-2* must be a level-01 or level-77 item in the LINKAGE SECTION.

The RETURNING data item is an output-only parameter.

Do not use the PROCEDURE DIVISION RETURNING phrase in:

- Programs that contain the ENTRY statement.
- Nested programs.
- Main programs: Results of specifying PROCEDURE DIVISION RETURNING on a main program are undefined. You should specify the PROCEDURE DIVISION RETURNING phrase only on called subprograms. For main programs, use the RETURN-CODE special register to return a value to the operating environment.

ADDRESS OF special register
For information about this register, see “ADDRESS OF” on page 18.

References to items in the LINKAGE SECTION

Data items defined in the LINKAGE SECTION of the called program can be referenced within the PROCEDURE DIVISION of that program if and only if they satisfy one of the conditions as listed in the topic.

- They are operands of the USING phrase of the PROCEDURE DIVISION header or the ENTRY statement.

- They are operands of SET ADDRESS OF, or CALL ... BY REFERENCE ADDRESS OF.
- They are defined with a REDEFINES or RENAMES clause, the object of which satisfies the above conditions.
- They are items subordinate to any item that satisfies the condition in the rules above.
- They are condition-names or index-names associated with data items that satisfy any of the above conditions.

Declaratives

Declaratives provide one or more special-purpose sections that are executed when an exceptional condition occurs.

When declarative sections are specified, they must be grouped at the beginning of the procedure division and the entire PROCEDURE DIVISION must be divided into sections.

Each declarative section starts with a USE statement that identifies the section's function. The series of procedures that follow specify the actions that are to be taken when the exceptional condition occurs. Each declarative section ends with another section-name followed by a USE statement, or with the keywords END DECLARATIVES.

The entire group of declarative sections is preceded by the keyword DECLARATIVES written on the line after the PROCEDURE DIVISION header. The group is followed by the keywords END DECLARATIVES. The keywords DECLARATIVES and END DECLARATIVES must each begin in Area A and be followed by a separator period. No other text can appear on the same line.

In the declaratives part of the PROCEDURE DIVISION, each section header must be followed by a separator period, and must be followed by a USE statement followed by a separator period. No other text can appear on the same line.

The USE statement has the following formats:

- “EXCEPTION/ERROR declarative” on page 581
- “DEBUGGING declarative” on page 583

The USE statement itself is never executed; instead, the USE statement defines the conditions that execute the succeeding procedural paragraphs, which specify the actions to be taken. After the procedure is executed, control is returned to the routine that activated it.

A declarative procedure can be performed from a nondeclarative procedure.

A nondeclarative procedure can be performed from a declarative procedure.

A declarative procedure can be referenced in a GO TO statement in a declarative procedure.

A nondeclarative procedure can be referenced in a GO TO statement in a declarative procedure.

You can include a statement that executes a previously called USE procedure that is still in control. However, to avoid an infinite loop, you must be sure there is an eventual exit at the bottom.

The declarative procedure is exited when the last statement in the procedure is executed.

Procedures

Within the PROCEDURE DIVISION, a *procedure* consists of a *section* or a group of sections, and a *paragraph* or group of paragraphs.

A *procedure-name* is a user-defined name that identifies a section or a paragraph.

Section
A *section-header* optionally followed by one or more paragraphs.

Section-header
A *section-name* followed by the keyword SECTION, followed by a separator period.

Section-headers are optional after the keywords END DECLARATIVES or if there are no declaratives.

Section-name
A user-defined word that identifies a section. A referenced section-name, because it cannot be qualified, must be unique within the program in which it is defined.

A section ends immediately before the next section header, or at the end of the PROCEDURE DIVISION, or, in the declaratives portion, at the keywords END DECLARATIVES.

Paragraph
A *paragraph-name* followed by a separator period, optionally followed by one or more sentences.

Paragraphs must be preceded by a period because paragraphs always follow either the IDENTIFICATION DIVISION header, a section, or another paragraph, all of which must end with a period.

Paragraph-name
A user-defined word that identifies a paragraph. A paragraph-name, because it can be qualified, need not be unique.

If there are no declaratives (format 2), a paragraph-name is not required in the PROCEDURE DIVISION.

A paragraph ends immediately before the next paragraph-name or section header, or at the end of the PROCEDURE DIVISION, or, in the declaratives portion, at the keywords END DECLARATIVES.

Paragraphs need not all be contained within sections, even if one or more paragraphs are so contained.

Sentence
One or more *statements* terminated by a separator period.

Statement
A syntactically valid combination of *identifiers* and symbols (literals, relational-operators, and so forth) beginning with a COBOL statement.

Identifier
The word or words necessary to make unique reference to a data item, optionally including qualification, subscripting, indexing, and reference-modification. In any PROCEDURE DIVISION reference (except the class test), the contents of an identifier must be compatible with the class specified through its PICTURE clause, otherwise results are unpredictable.

Execution begins with the first statement in the PROCEDURE DIVISION, excluding declaratives. Statements are executed in the order in which they are presented for compilation, unless the statement rules dictate some other order of execution.

The end of the PROCEDURE DIVISION is indicated by one of the following items:

- An IDENTIFICATION DIVISION header that indicates the start of a nested source program
- An END PROGRAM marker
- The physical end of a program; that is, the physical position in a source program after which no further source program lines occur

Arithmetic expressions

Arithmetic expressions are used as operands of certain conditional and arithmetic statements.

An arithmetic expression can consist of any of the following items:

1. An identifier described as a numeric elementary item (including numeric functions)
2. A numeric literal
3. The figurative constant ZERO
4. Identifiers and literals, as defined in items 1, 2, and 3, separated by arithmetic operators

5. Two arithmetic expressions, as defined in items 1, 2, 3, or 4, separated by an arithmetic operator
6. An arithmetic expression, as defined in items 1, 2, 3, 4, or 5, enclosed in parentheses

Any arithmetic expression can be preceded by a unary operator.

Identifiers and literals that appear in arithmetic expressions must represent either numeric elementary items or numeric literals on which arithmetic can be performed.

If an exponential expression is evaluated as both a positive and a negative number, the result is always the positive number. For example, the square root of 4:

```
4 ** 0.5
```

is evaluated as +2 and -2. COBOL for Linux always returns +2.

If the value of an expression to be raised to a power is zero, the exponent must have a value greater than zero. Otherwise, the size error condition exists. In any case where no real number exists as the result of an evaluation, the size error condition exists.

Arithmetic operators

Five binary arithmetic operators and two unary arithmetic operators can be used in arithmetic expressions. These operators are represented by specific characters that must be preceded and followed by a space.

These binary and unary arithmetic operators are shown in Table 24 on page 236.

Table 24. ***Binary and unary operators***

Binary operator	Meaning	Unary operator	Meaning
+	Addition	+	Multiplication by +1
-	Subtraction	-	Multiplication by -1
*	Multiplication		
/	Division		
**	Exponentiation		

Limitation: Exponents in fixed-point exponential expressions cannot contain more than nine digits. The compiler will truncate any exponent with more than nine digits. In the case of truncation, the compiler will issue a diagnostic message if the exponent is a literal or constant; if the exponent is a variable or data-name, a diagnostic message is issued at run time.

Parentheses can be used in arithmetic expressions to specify the order in which elements are to be evaluated.

Expressions within parentheses are evaluated first. When expressions are contained within nested parentheses, evaluation proceeds from the least inclusive to the most inclusive set.

When parentheses are not used, or parenthesized expressions are at the same level of inclusiveness, the following hierarchic order is implied:

1. Unary operator
2. Exponentiation
3. Multiplication and division
4. Addition and subtraction

Parentheses either eliminate ambiguities in logic where consecutive operations appear at the same hierarchic level, or modify the normal hierarchic sequence of execution when this is necessary. When the

order of consecutive operations at the same hierarchic level is not completely specified by parentheses, the order is from left to right.

An arithmetic expression can begin only with a left parenthesis, a unary operator, or an operand (that is, an identifier or a literal). It can end only with a right parenthesis or an operand. An arithmetic expression must contain at least one reference to an identifier or a literal.

There must be a one-to-one correspondence between left and right parentheses in an arithmetic expression, with each left parenthesis placed to the left of its corresponding right parenthesis.

If the first operator in an arithmetic expression is a unary operator, it must be immediately preceded by a left parenthesis if that arithmetic expression immediately follows an identifier or another arithmetic expression.

The following table shows permissible arithmetic symbol pairs. An arithmetic symbol pair is the combination of two such symbols in sequence. In the table:

Yes
Indicates a permissible pairing.

No
Indicates that the pairing is not permitted.

Table 25. ***Valid arithmetic symbol pairs***

	Identifier or literal second symbol	*** / ** + - second symbol**	**Unary + or unary - second symbol**	**(second symbol**	**) second symbol**
Identifier or literal first symbol	No	Yes	No	No	Yes
*** / ** + - first symbol**	Yes	No	Yes	Yes	No
Unary + or unary - first symbol	Yes	No	No	Yes	No
(first symbol	Yes	No	Yes	Yes	No
) first symbol	No	Yes	No	No	Yes

Arithmetic with date fields

Arithmetic operations that include a date field are restricted to adding a nondate to a date field, subtracting a nondate from a date field, and subtracting a date field from a compatible date field.

Date field operands are compatible if they have the same date format except for the year part, which can be windowed or expanded.

The following operations are not allowed:

- Any operation between incompatible dates
- Adding two date fields
- Subtracting a date field from a nondate

- Unary minus applied to a date field
- Division, exponentiation, or multiplication of or by a date field
- Arithmetic expressions that specify a year-last date field
- Arithmetic statements that specify a year-last date field, except as a receiving data item when the sending field is a nondate

The sections below describe the result of using date fields in the supported addition and subtraction operations.

For more information about using date fields in arithmetic operations, see:

- "ADD statement" on page 283
- "COMPUTE statement" on page 295
- "SUBTRACT statement" on page 392

Usage notes

- Arithmetic operations treat date fields as numeric items; they do not recognize any date-specific internal structure. For example, adding 1 to a windowed date field that contains the value 991231 (which might be used in an application to represent December 31, 1999) results in the value 991232, not 000101.
- When used as operands in arithmetic expressions or arithmetic statements, windowed date fields are automatically expanded according to the century window specified by the YEARWINDOW compiler option..

Addition that involves date fields

The following table shows the result of using a date field with a compatible operand in an addition.

Table 26. ***Results of using date fields in addition***

	Nondate second operand	**Date field second operand**
Nondate first operand	Nondate	Date field
Date field first operand	Date field	Not allowed

For details on how a result is stored in a receiving field, see "Storing arithmetic results that involve date fields" on page 239.

Subtraction that involves date fields

This section describes the results of using date fields in subtraction.

The following table shows the result of using a date field with a compatible operand in the subtraction:

first operand - *second operand*

In a SUBTRACT statement, these operands appear in the reverse order:

SUBTRACT *second operand* FROM *first operand*

Table 27. ***Results of using date fields in subtraction***

	Nondate second operand	**Date field second operand**
Nondate first operand	Nondate	Not allowed
Date field first operand	Date field	Nondate

Storing arithmetic results that involve date fields

The ADD, COMPUTE, DIVIDE, MULTIPY, and SUBTRACT statements perform arithmetic, then store the result, or sending field, into one or more receiving fields.

In a MULTIPLY statement, only GIVING identifiers can be date fields. In a DIVIDE statement, only GIVING identifiers or the REMAINDER identifier can be date fields.

Any windowed date fields that are operands of the arithmetic expression or statement are treated as if they were expanded before use, as described under "Semantics of windowed date fields" on page 166.

If the sending field is a date field, then the receiving field must be a compatible date field. That is, both fields must have the same date format, except for the year part, which can be windowed or expanded.

If the ON SIZE ERROR clause is not specified on the statement, the store operation follows the existing COBOL rules for the statement and proceeds as if the receiving and sending fields (after any automatic expansion of windowed date field operands or result) were both nondates.

Table 28 on page 239 shows how these statements store the value of a sending field in a receiving field, where either field can be a date field. The section uses the following terms to describe how the store is performed:

Nonwindowed
: The statement performs the store with no special date-sensitive size error processing, as described under "SIZE ERROR phrases" on page 269.

Windowed with nondate sending field
: The nondate sending field is treated as a windowed date field compatible with the windowed date receiving field, but with the year part representing the number of years since 1900. (This representation is similar to a windowed date field with a base year of 1900, except that the year part is not limited to a positive number of at most two digits.) The store proceeds as if this assumed year part of the sending field were expanded by adding 1900 to it.

Windowed with date sending field
: The store proceeds as if all windowed date field operands had been expanded as necessary, so that the sending field is a compatible expanded date field.

Size error processing: For both kinds of sending field, if the assumed or actual year part of the sending field falls within the century window, the sending field is stored in the receiving field after removing the century component of the year part. That is, the low-order or rightmost two digits of the expanded year part are retained and the high-order or leftmost two digits are discarded.

If the year part does not fall within the century window, then the receiving field is unmodified, and the size error imperative statement is executed when any remaining arithmetic operations are complete.

For example:

```
77  DUE-DATE PICTURE 9(5) DATE FORMAT YYXXX.
77  IN-DATE  PICTURE 9(8) DATE FORMAT YYYYXXX VALUE 1995001.
    ...
    COMPUTE DUE-DATE = IN-DATE + 10000
      ON SIZE ERROR imperative-statement
    END-COMPUTE
```

The sending field is an expanded date field representing January 1, 2005. Assuming that 2005 falls within the century window, the value stored in DUE-DATE is 05001; that is, the sending value of 2005001 without the century component 20.

Table 28. ***Storing arithmetic results that involve date fields when ON SIZE ERROR is specified***

	Nondate sending field	**Date field sending field**
Nondate receiving field	Nonwindowed	Not allowed

Table 28. ***Storing arithmetic results that involve date fields when ON SIZE ERROR is specified*** *(continued)*		
	Nondate sending field	**Date field sending field**
Windowed date field receiving field	Windowed	Windowed
Expanded date field receiving field	Nonwindowed	Nonwindowed

Conditional expressions

A conditional expression causes the object program to select alternative paths of control, depending on the truth value of a test. Conditional expressions are specified in EVALUATE, IF, PERFORM, and SEARCH statements.

A conditional expression can be specified in either simple conditions or complex conditions. Both simple and complex conditions can be enclosed within any number of paired parentheses; the parentheses do not change whether the condition is simple or complex.

Simple conditions

There are five simple conditions.

The simple conditions are:

- Class condition
- Condition-name condition
- Relation condition
- Sign condition
- Switch-status condition

A simple condition has a truth value of either true or false.

Class condition

The class condition determines whether the content of a data item is alphabetic, alphabetic-lower, alphabetic-upper, numeric, DBCS, KANJI, or contains only the characters in the set of characters specified by the CLASS clause as defined in the SPECIAL-NAMES paragraph of the ENVIRONMENT DIVISION.

Format

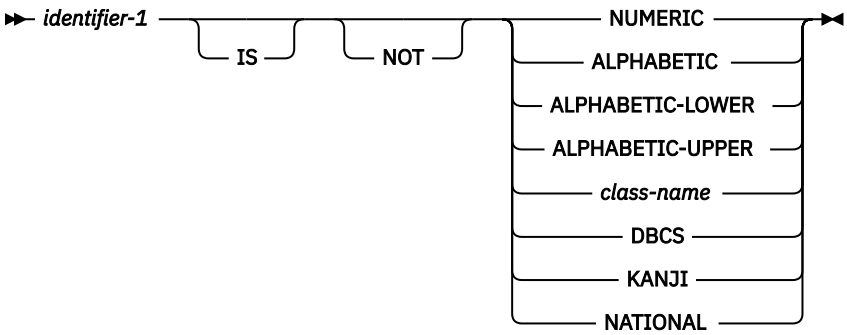

identifier-1
Must reference a data item described with one of the following usages:

- DISPLAY, NATIONAL, COMPUTATIONAL-3, or PACKED-DECIMAL when NUMERIC is specified
- DISPLAY-1 when DBCS or KANJI is specified
- DISPLAY or NATIONAL when ALPHABETIC, ALPHABETIC-UPPER, or ALPHABETIC-LOWER is specified
- DISPLAY when class-name is specified

Must not be of class alphabetic when NUMERIC is specified.

Must not be of class numeric when ALPHABETIC, ALPHABETIC-UPPER, or ALPHABETIC-LOWER is specified.

Table 29 on page 242 lists the forms of class condition that are valid for each type of identifier.

If *identifier-1* is a function-identifier, it must reference an alphanumeric, national function, or date-time function.

An alphanumeric group item can be used in a class condition where an elementary alphanumeric item can be used, *except* that the NUMERIC class condition cannot be used if the group contains one or more signed elementary items.

NATIONAL
identifier-1 consists entirely of NATIONAL characters, with the following rules:

- For NATIONAL data items, the identifier being tested must be described explicitly or implicitly as USAGE NATIONAL.
- A range check is performed on the data portion of the item for valid NATIONAL character representation.

NOT
When used, NOT and the next keyword define the class test to be executed for truth value. For example, NOT NUMERIC is a truth test for determining that the result of a NUMERIC class test is false (in other words, the item contains data that is nonnumeric).

NUMERIC
identifier-1 consists entirely of the characters 0 through 9, with or without an operational sign.

If its PICTURE does not contain an operational sign, the identifier being tested is determined to be numeric only if the contents are numeric and an operational sign is not present.

If its PICTURE does contain an operational sign, the identifier being tested is determined to be numeric only if the item is an elementary item, the contents are numeric, and a valid operational sign is present.

ALPHABETIC
identifier-1 consists entirely of any combination of the lowercase or uppercase Latin alphabetic characters A through Z and the space.

ALPHABETIC-LOWER
identifier-1 consists entirely of any combination of the lowercase Latin alphabetic characters a through z and the space.

ALPHABETIC-UPPER
identifier-1 consists entirely of any combination of the uppercase Latin alphabetic characters A through Z and the space.

class-name
identifier-1 consists entirely of the characters listed in the definition of class-name in the SPECIAL-NAMES paragraph.

DBCS
identifier-1 consists entirely of DBCS characters. *identifier-1* contains DBCS characters that correspond to valid EBCDIC DBCS characters.

A range check is performed on the item for valid character representation. The valid range is X'41' through X'FE' for both bytes of each DBCS character and X'4040' for the DBCS blank. (These ranges

are for the equivalent DBCS character representation for Enterprise COBOL for z/OS, not the actual DBCS character value ranges of the workstation DBCS characters.)

KANJI

identifier-1 contains DBCS characters that correspond to valid EBCDIC DBCS characters.

A range check is performed on the item for valid character representation. The valid range is from X'41' through X'7E' for the first byte, from X'41' through X'FE' for the second byte, and X'4040' for the DBCS blank. (These ranges are for the equivalent DBCS character representation for Enterprise COBOL for z/OS, not the actual DBCS character value ranges of the workstation DBCS characters.)

Table 29. ***Valid forms of the class condition for different types of data items***

Type of data item referenced by *identifier-1*	**Valid forms of the class condition**	
Alphabetic	ALPHABETIC ALPHABETIC-LOWER ALPHABETIC-UPPER *class-name*	NOT ALPHABETIC NOT ALPHABETIC-LOWER NOT ALPHABETIC-UPPER NOT *class-name*
Alphanumeric, alphanumeric-edited, or numeric-edited	ALPHABETIC ALPHABETIC-LOWER ALPHABETIC-UPPER NUMERIC *class-name*	NOT ALPHABETIC NOT ALPHABETIC-LOWER NOT ALPHABETIC-UPPER NOT NUMERIC NOT *class-name*
External-decimal or internal-decimal	NUMERIC	NOT NUMERIC
DBCS	DBCS KANJI	NOT DBCS NOT KANJI
National	NUMERIC ALPHABETIC ALPHABETIC-LOWER ALPHABETIC-UPPER NATIONAL	NOT NUMERIC NOT ALPHABETIC NOT ALPHABETIC-LOWER NOT ALPHABETIC-UPPER NOT NATIONAL
Numeric	NUMERIC *class-name*	NOT NUMERIC NOT *class-name*
Date-Time	NUMERIC *class-name*	NOT NUMERIC NOT *class-name*

Condition-name condition

A condition-name condition tests a conditional variable to determine whether its value is equal to any values that are associated with the condition-name.

Format

```
►►─ condition-name-1 ─►◄
```

A condition-name is used in conditions as an abbreviation for the relation condition. The rules for comparing a conditional variable with a condition-name value are the same as those specified for relation conditions.

If *condition-name-1* has been associated with a range of values (or with several ranges of values), the conditional variable is tested to determine whether its value falls within the ranges, including the end values. The result of the test is true if one of the values that corresponds to the condition-name equals the value of its associated conditional variable.

Condition-names are allowed for alphanumeric,boolean, date-time, DBCS, national, and floating-point data items, as well as others, as defined for the condition-name format of the VALUE clause.

The following example illustrates the use of conditional variables and condition-names:

```
01  AGE-GROUP         PIC  99.
    88  INFANT        VALUE 0.
    88  BABY          VALUE 1, 2.
    88  CHILD         VALUE 3 THRU 12.
    88  TEENAGER      VALUE 13 THRU 19.
```

AGE-GROUP is the conditional variable; INFANT, BABY, CHILD, and TEENAGER are condition-names. For individual records in the file, only one of the values specified in the condition-name entries can be present.

The following IF statements can be added to the above example to determine the age group of a specific record:

```
IF INFANT...         (Tests for value 0)
IF BABY...           (Tests for values 1, 2)
IF CHILD...          (Tests for values 3 through 12)
IF TEENAGER...       (Tests for values 13 through 19)
```

Depending on the evaluation of the condition-name condition, alternative paths of execution are taken by the object program.

Condition-name conditions and windowed date field comparisons

If the conditional variable is a windowed date field, the values associated with its condition-names are treated like values of the windowed date field. That is, they are treated as if they were converted to expanded date format.

For more information about the semantics of windowed date fields, see “Semantics of windowed date fields” on page 166.

For example, given YEARWINDOW(1945), a century window of 1945–2044, and the following definition:

```
05  DATE-FIELD   PIC 9(6) DATE FORMAT YYXXXX.
    88  DATE-TARGET       VALUE 051220.
```

a value of 051220 in DATE-FIELD would cause the following condition to be true:

```
IF DATE-TARGET...
```

because the value associated with DATE-TARGET and the value of DATE-FIELD would both be treated as if they were prefixed by "20" before comparison.

However, the following condition would be false:

```
IF DATE-FIELD = 051220...
```

because in a comparison with a windowed date field, literals are treated as if they were prefixed by "19" regardless of the century window. So the above condition effectively becomes:

```
IF 20051220 = 19051220...
```

For more information about using windowed date fields in conditional expressions, see “Comparison of date fields” on page 253.

Relation conditions

A relation condition specifies the comparison of two operands. The relational operator that joins the two operands specifies the type of comparison. The relation condition is true if the specified relation exists between the two operands; the relation condition is false if the specified relation does not exist.

Comparisons are defined for the following cases:

- Two operands of class alphabetic
- Two operands of class alphanumeric
- Two operands of class DBCS
- Two operands of class national
- Two operands of class numeric
- Two operands where one is a numeric integer and the other is class alphanumeric or national
- Two operands where one is class DBCS and the other is class national
- Comparisons involving indexes or index data items
- Two data pointer operands
- Two procedure pointer operands
- Two function pointer operands
- An alphanumeric group and any operand that has usage DISPLAY, DISPLAY-1, or NATIONAL
- Two date-time operands

The following relation condition formats are defined:

- A general relation condition, for comparisons that involve only data items, literals, index-names, or index data items. For details, see “General relation conditions” on page 244.
- A data pointer relation condition. For details, see “Data pointer relation conditions” on page 253.
- A program pointer relation condition, for comparison of procedure pointers or function pointers. For details, see “Procedure-pointer and function-pointer relation conditions” on page 255.

General relation conditions

A general relation condition compares two operands, either of which can be an identifier, literal, arithmetic expression, or index-name.

Format 1: general relation condition

```
►►─ operand-1 ─┬─────────┬─┬─────────┬─┬─ GREATER ─┬─────────┬─┬─
               └─ IS ────┘ └─ NOT ───┘ │           └─ THAN ──┘ │
                                       │─────── > ─────────────│
                                       │─ LESS ────┬─────────┬─│
                                       │           └─ THAN ──┘ │
                                       │─────── < ─────────────│
                                       │─ EQUAL ───┬─────────┬─│
                                       │           └─ TO ────┘ │
                                       │─────── = ─────────────│
                                       │
                                       │─ GREATER ─┬─────────┬─ OR EQUAL ─┬─────────┬─│
                                       │           └─ THAN ──┘            └─ TO ────┘ │
                                       │─────────────── >= ──────────────────────────│
                                       │─ LESS ────┬─────────┬─ OR EQUAL ─┬─────────┬─│
                                       │           └─ THAN ──┘            └─ TO ────┘ │
                                       │─────────────── <= ──────────────────────────│
►── operand-2 ─►◄
```

operand-1
The subject of the relation condition. Can be an identifier, literal, function-identifier, arithmetic expression, or index-name.

operand-2
The object of the relation condition. Can be an identifier, literal, function-identifier, arithmetic expression, or index-name.

An alphanumeric literal can be enclosed in parentheses within a relation condition.

The relation condition must contain at least one reference to an identifier.

The relational operators, shown in Table 30 on page 245, specify the type of comparison to be made. Each relational operator must be preceded and followed by a space. The two characters of the relational operators >= and <= must not have a space between them.

Table 30. ***Relational operators and their meanings***

Relational operator	Can be written	Meaning
IS GREATER THAN	IS **>**	Greater than
IS NOT GREATER THAN	IS NOT **>**	Not greater than
IS LESS THAN	IS **<**	Less than
IS NOT LESS THAN	IS NOT **<**	Not less than
IS EQUAL TO	IS **=**	Equal to
IS NOT EQUAL TO	IS NOT **=**	Not equal to
IS GREATER THAN OR EQUAL TO	IS **>=**	Is greater than or equal to
IS LESS THAN OR EQUAL TO	IS **<=**	Is less than or equal to

In a general relation condition, data items, literals, and figurative constants of class alphabetic, alphanumeric, DBCS, national, and numeric are compared using the following comparison types:

Comparison type	Meaning
Alphanumeric	Comparison of the alphanumeric character value of two operands
Boolean	Comparison of the boolean value of two operands
Date-time	Comparison of the date or time values of two operands.
DBCS	Comparison of the DBCS character value of two operands
National	Comparison of the national character value of two operands
Numeric	Comparison of the algebraic value of two operands
Group	Comparison of the alphanumeric character value of two operands, where one or both operands is an alphanumeric group item

Table 31 on page 247 and Table 32 on page 248 show the permissible pairs for comparisons with different types of operands. The comparison type is indicated at the row and column intersection for permitted comparisons, using the following key:

Alph
Comparison of alphanumeric characters (further described in "Alphanumeric comparisons" on page 249)

Boolean
Comparison of the boolean value of two operands (further described in "Boolean comparisons" on page 250)

Date-time
Comparison of the date or time values (further described in "Date-time comparisons" on page 250)

DBCS
Comparison of DBCS characters (further described in "DBCS comparisons" on page 250)

Nat
Comparison of national characters (further described in "National comparisons" on page 250)

Num
Comparison of algebraic value (further described in "Numeric comparisons" on page 251)

Group
Comparison of alphanumeric characters involving an alphanumeric group (further described in "Group comparisons" on page 252)

(Int)
Integer items only (combined with comparison type Alph, Nat, Num, or Group)

Blank
Comparison is not allowed

For rules and restrictions for comparisons involving year-last date fields, see "Comparison of date fields" on page 253.

For rules and restrictions for comparisons involving index-names and index data items, see "Comparison of index-names and index data items" on page 252.

Introduction to Table 31 on page 247: This table is organized in the following manner:

- In the first column, under "Type of data item or literal", each row identifies a type of operand. In some cases, the type of operand references a grouping of operands that have common properties for comparison. For example, the row for "Alphanumeric character items" references all the types of operands that are listed in the cell, as follows:
  - Data items of category:
    - Alphanumeric
    - Alphanumeric- edited

- Numeric-edited with usage DISPLAY
  - Alphanumeric functions
- Subsequent column headings refer to the type of an operand or a grouping of operands. For example, the column heading "Alphabetic and alphanumeric character items" refers to the types of operands identified as "Alphabetic data items" and all the types of operands that are grouped under the operand titled "Alphanumeric character items".
- Literals are listed as a type of operand only in the first column. They do not appear as column headings because literals cannot be used as both operands of a relation condition.

Table 31. ***Comparisons involving data items and literals***

Type of data item or literal	Alpha-numeric group items	Alpha-betic and alpha-numeric character items	Zoned decimal items	Native numeric items	Alpha-numeric floating-point items	National character items	National decimal items	National floating-point items	DBCS items	Boolean Items	Date-time Items
Alphanumeric group item	Group	Group	Group (Int)		Group	Group	Group (Int)	Group	Group		
Alphabetic data items	Group	Alph	Alph (Int)		Alph	Nat	Alph (Int)	Nat			
Alphanumeric character items: • Data items of category: – Alphanumeric – Alphanumeric- edited – Numeric-edited with usage DISPLAY • Alphanumeric functions	Group	Alph	Alph (Int)		Alph	Nat	Alph (Int)	Nat			
Alphanumeric literals	Group	Alph	Alph (Int)		Alph	Nat	Alph (Int)	Nat			
Numeric literals	Group (Int)	Alph (Int)	Num	Num	Num	Nat (Int)	Num	Num			
Zoned decimal data items	Group (Int)	Alph (Int)	Num	Num	Num	Nat (Int)	Num	Num			
Native numeric items: • Binary • Arithmetic expression • Internal decimal • Internal floating point **Numeric and integer intrinsic functions**			Num	Num	Num		Num	Num			
Display floating-point items	Group	Alph	Num	Num	Num	Nat	Num	Num			
Floating-point literals			Num	Num	Num		Num	Num			

Table 31. ***Comparisons involving data items and literals*** *(continued)*

Type of data item or literal	Alpha-numeric group items	Alpha-betic and alpha-numeric character items	Zoned decimal items	Native numeric items	Alpha-numeric floating-point items	National character items	National decimal items	National floating-point items	DBCS items	Boolean Items	Date-time Items
National character items: • Data items of category: – National – National- edited – Numeric- edited with usage NATIONAL • National intrinsic functions • National groups (treated as elementary item)	Group	Nat	Nat (Int)		Nat	Nat	Nat (Int)	Nat	Nat		
National literals	Group	Nat	Nat (Int)		Nat	Nat	Nat (Int)	Nat	Nat		
National decimal items	Group (Int)	Alph (Int)	Num	Num	Num	Nat (Int)	Num	Num			
National floating-point items	Group	Nat	Num	Num	Num	Nat	Num	Num			
DBCS data items	Group					Nat			DBCS		
DBCS literals	Group					Nat			DBCS		
Boolean data items										Alph	
Boolean literals										Alph	
Date-time data items	Group		Num (Int)	Num (Int)	Alph		Num (Int)				Date-Time

Table 32. ***Comparisons involving figurative constants***

Figurative constant	Alpha-numeric group items	Alpha-betic and alpha-numeric character items	Zoned decimal items	Native numeric items	Alpha-numeric floating point items	National character items	National decimal items	National floating point items	DBCS items
ZERO	Group	Alph	Num	Num	Num	Nat	Num	Num	
SPACE	Group	Alph	Alph (Int)		Alph	Nat	Nat (Int)	Nat	DBCS
HIGH-VALUE, LOW-VALUE QUOTE	Group	Alph	Alph (Int)		Alph	Nat	Nat (Int)	Nat	
Symbolic character	Group	Alph	Alph (Int)		Alph	Nat	Nat (Int)	Nat	
ALL alphanumeric literal	Group	Alph	Alph (Int)		Alph	Nat	Nat (Int)	Nat	
ALL national literal	Group	Nat	Nat (Int)		Nat	Nat	Nat (Int)	Nat	Nat
ALL DBCS literal	Group					Nat			DBCS

Alphanumeric comparisons

An alphanumeric comparison is a comparison of the single-byte character values of two operands.

When one of the operands is neither class alphanumeric nor class alphabetic, that operand is processed as follows:

- A display floating-point data item is treated as though it were a data item of category alphanumeric, rather than as a numeric value.
- A zoned decimal integer operand is treated as though it were moved to a temporary elementary data item of category alphanumeric with a length the same as the total number of digits in the number, according to the rules of the MOVE statement.

  When the ZWB compiler option is in effect, the unsigned value of the integer operand is moved to the temporary data item. When the NOZWB compiler option is specified, the signed value is moved to the temporary data item. See *ZWB* in the *COBOL for Linux on x86 Programming Guide* for more details about the ZWB (NOZWB) compiler option.

  Comparison then proceeds with the temporary data item of category alphanumeric.

Comparison of two alphanumeric operands

The collating sequence used for comparison is determined by the PROGRAM COLLATING SEQUENCE clause in the OBJECT-COMPUTER paragraph and the setting of the COLLSEQ compiler option.

If the PROGRAM COLLATING SEQUENCE clause is specified with an alphabet-name of STANDARD-1, STANDARD-2, or EBCDIC, the COLLSEQ compiler option is ignored. The collating sequence is the one associated with the specified alphabet-name. The comparison proceeds as described below for Standard comparison.

If the PROGRAM COLLATING SEQUENCE clause is not specified or is specified with an alphabet-name of NATIVE, the method of comparison is determined by the COLLSEQ compiler option:

- If the COLLSEQ(BINARY) compiler option is in effect, the collating sequence is determined by the binary values of characters. The comparison proceeds as described below for Standard comparison.
- If the COLLSEQ(EBCDIC) compiler option is in effect, the EBCDIC collating sequence is used. The comparison proceeds as described below for Standard comparison.
- If the COLLSEQ(LOCALE) compiler option is in effect, the collating sequence is determined by the runtime locale. For purposes of comparison, trailing spaces are truncated from the operands except that an operand consisting of all spaces is truncated to a single space. Locale-based comparison is not necessarily a character-by-character comparison. If the shorter operand were extended with spaces as for a nonlocale-based comparison, the result might not be the culturally-expected result. For information about locales, see “Locale considerations” on page 635.

If the PROGRAM COLLATING SEQUENCE clause is specified with an alphabet-name that references a collating sequence defined by literals, the collating sequence is determined by the order of the specified literals and the sequence indicated by the COLLSEQ compiler option, as described for the “ALPHABET clause” on page 99. The comparison proceeds as described below for Standard comparison.

Standard comparison

A standard comparison is any comparison that is not based on a locale. The standard comparison method depends on whether the operands to be compared are of equal length or unequal length.

If the operands are of unequal length, the comparison proceeds as though the shorter operand were padded on the right with appropriate space characters to make the operands of equal length. The comparison then proceeds according to the rules for the comparison of operands of equal length.

If the operands are of equal length, the comparison proceeds by comparing corresponding character positions in the two operands, starting from the leftmost position, until either unequal characters are encountered or the rightmost character position is reached, whichever comes first. The operands are determined to be equal if all corresponding characters are equal.

The first-encountered unequal character in the operands is compared to determine the relation of the operands. The operand that contains the character with the higher collating value is the greater operand.

Boolean comparisons

An alphanumeric comparison is a comparison of the single-byte character values of two operands.

Boolean operands are used only in the EQUAL TO or NOT EQUAL TO relation condition. Boolean operands cannot be compared to non-Boolean operands. Boolean data items and literals must be one position in length. Two Boolean operands are equal if they both have a value of Boolean 1 or Boolean 0.

Date-time comparisons

A date-time comparison is a comparison of the date or time values of two operands.

If an item of class date-time is compared to a nonnumeric operand (except for numeric-edited operands), the date-time item is treated as if it were nonnumeric.

During the comparison of an item of class date-time to an numeric-edited or numeric operand, the date-time item is de-edited. De-editing results in a numeric integer. This numeric integer is then numerically compared with the other operand.

During the comparison of one date-time item with another, the items are first converted to a common date, time, or timestamp format, and then compared. Characters that are part of a format literal, but which are not conversion specifiers (for example the / or - characters), have no effect on a date-time comparison.

When comparing a date item to a timestamp item, only the date portion of the timestamp is considered. When comparing a time item to a timestamp item, only the time portion of the timestamp is considered.

DBCS comparisons

A DBCS comparison is a comparison of two DBCS operands.

The following rules apply to a DBCS comparison:

- Comparisons of DBCS operands are based on a collating sequence specified by the COLLSEQ compiler option:
  - If the COLLSEQ(LOCALE) compiler option is in effect, the collating sequence is determined by the runtime locale. For information about the locale, see “Locale considerations” on page 635.
  - Otherwise, the collating sequence is determined by the binary values of the DBCS characters.

National comparisons

A national comparison is a comparison of the national character value of two operands of class national.

When the relation condition specifies an operand that is not class national, that operand is converted to a data item of category national before the comparison. The following list describes the conversion of operands to category national.

DBCS
A DBCS operand is treated as though it were moved to a temporary data item of category national of the same length as the DBCS operand. DBCS characters are converted to the corresponding national characters. The source code page used for the conversion depends on whether the DBCS operand is an EBCDIC or ASCII data item. If the DBCS operand is an EBCDIC data item (that is, the compiler option CHAR(EBCDIC) is in effect and the NATIVE phrase is not specified for the operand), the EBCDIC code page in effect for the operand is used; otherwise, the code page indicated by the locale in effect for the operand is used. For details, see “Locale considerations” on page 635.

Alphabetic, alphanumeric, alphanumeric-edited, and numeric-edited with usage DISPLAY
The operand is treated as though it were moved to a temporary data item of category national of the length needed to represent the number of character positions in that operand. Alphanumeric characters are converted to the corresponding national characters. The source code page used for the conversion depends on whether the alphanumeric operand is an EBCDIC or ASCII data item. If the alphanumeric operand is an EBCDIC data item (that is, the compiler option CHAR(EBCDIC) is in effect and the NATIVE phrase is not specified for the operand), the EBCDIC code page in effect for the operand is used; otherwise, the code page indicated by the locale in effect for the operand is used. For details, see "Locale considerations" on page 635.

Numeric integer
A numeric integer operand is treated as though it were moved to a temporary data item of category alphanumeric of a length the same as the number of digits in the integer. The unsigned value is used. The resulting temporary data item is then converted as an alphanumeric operand.

External floating-point
A display floating-point item is treated as though it were a data item of category alphanumeric, rather than as a numeric value, and then converted as an alphanumeric operand.

A national floating-point item is treated as though it were a data item of category national, rather than as a numeric value.

The implicit moves for the conversions are carried out in accordance with the rules of the MOVE statement.

The resulting category national data item is used in the comparison of two national operands.

Comparison of two national operands

The method used for comparison is determined by the setting of the NCOLLSEQ compiler option.

If the NCOLLSEQ(BINARY) compiler option is in effect, the collating sequence is determined by the binary values of national characters. The comparison proceeds as follows:

- If the operands are of unequal length, the comparison proceeds as though the shorter operand were padded on the right with the default national space character (NX'2000') to make the operands of equal length. The comparison then proceeds according to the rules for the comparison of operands of equal length.
- If the operands are of equal length, the comparison proceeds by comparing corresponding national character positions in the two operands, starting from the leftmost position, until either unequal national characters are encountered or the rightmost national character position is reached, whichever comes first. The operands are determined to be equal if all corresponding national characters are equal.
- The first-encountered unequal national character in the operands is compared to determine the relation of the operands. The operand that contains the national character with the higher collating value is the greater operand.

If the NCOLLSEQ(LOCALE) compiler option is in effect, the collating sequence is determined by the runtime locale. For purposes of comparison, trailing spaces are truncated from the operands except that an operand consisting of all spaces is truncated to a single space. Locale-based comparison is not necessarily a character-by-character comparison. If the shorter operand were extended with spaces as for a nonlocale-based comparison, the result might not be the culturally-expected result. For information about locales, see "Locale considerations" on page 635.

The PROGRAM COLLATING SEQUENCE clause has no effect on comparisons of national operands.

Numeric comparisons

A numeric comparison is a comparison of the algebraic value of two operands of class numeric.

When the algebraic values of numeric operands are compared:

- The length (number of digits) of the operands is not significant.
- The usage of the operands is not significant.

- Unsigned numeric operands are considered positive.
- All zero values compare equal; the presence or absence of a sign does not affect the result.

Group comparisons

A group comparison is a comparison of the alphanumeric character values of two operands.

For the comparison operation , each operand is treated as though it were an elementary data item of category alphanumeric of the same size as the operand, in bytes. The comparison then proceeds as for two elementary operands of category alphanumeric, as described in "Alphanumeric comparisons" on page 249.

Usage note: There is no conversion of data for group comparisons. The comparison operates on bytes of data without regard to data representation. The result of comparing an elementary item or literal operand to an alphanumeric group item is predictable when that operand and the content of the group item have the same data representation.

Comparison of index-names and index data items

Comparisons involving index-names, index data items, or both conform to rules.

The rules for comparisons are:

- The comparison of two index-names is actually the comparison of the corresponding occurrence numbers.
- In the comparison of an index-name with a data item (other than an index data item), or in the comparison of an index-name with a literal, the occurrence number that corresponds to the value of the index-name is compared with the data item or literal.
- In the comparison of an index-name with an arithmetic expression, the occurrence number that corresponds to the value of the index-name is compared with the arithmetic expression.

  Because an integer function can be used wherever an arithmetic expression can be used, you can compare an index-name to an integer or numeric function.
- In the comparison of an index data item with an index-name or another index data item, the actual values are compared without conversion. Results of any other comparison involving an index data item are undefined.

Valid comparisons for index-names and index data items are shown in the following table.

Table 33. ***Comparisons for index-names and index data items***

Operands compared	Index-name	Index data item	Data-name (numeric integer only)	Literal (numeric integer only)	Arithmetic Expression
Index-name	Compare occurrence number	Compare without conversion	Compare occurrence number with content of referenced data item	Compare occurrence number with literal	Compare occurrence number with arithmetic expression
Index data item	Compare without conversion	Compare without conversion	Invalid	Invalid	Invalid

Comparison of date fields

Date fields can be alphanumeric category, zoned decimal, or internal decimal; the existing rules for the validity and comparison type (numeric or alphanumeric) apply.

For example, an alphanumeric date field cannot be compared with an internal decimal date field. In addition to these rules, two date fields can be compared only if they are compatible; they must have the same date format except for the year part, which can be windowed or expanded.

For year-last date fields, the only comparisons that are supported are IS EQUAL TO and IS NOT EQUAL TO between two year-last date fields with identical date formats, or between a year-last date field and a nondate.

Table 34 on page 253 shows supported comparisons for nonyear-last date fields. This table uses the following terms to describe how the comparisons are performed:

Nonwindowed
The comparison is performed with no windowing, as if the operands were both nondates.

Windowed
The comparison is performed as if:

1. Any windowed date field in the relation were expanded according to the century window specified by the YEARWINDOW compiler option, as described under "Semantics of windowed date fields" on page 166.
2. Any repetitive alphanumeric figurative constant were expanded to the size of the windowed date field with which it is compared, giving an alphanumeric nondate comparand. Repetitive alphanumeric figurative constants include ZERO (in an alphanumeric context), SPACE, LOW-VALUE, HIGH-VALUE, QUOTE and ALL *literal*.
3. Any nondate operands were treated as if they had the same date format as the date field, but with a base year of 1900.

The comparison is then performed according to normal COBOL rules. Alphanumeric comparisons are not changed to numeric comparisons by the prefixing of the century value.

Table 34. Comparisons with date fields

	Nondate second operand	**Windowed date field second operand**	**Expanded date field second operand**
Nondate first operand	Nonwindowed	Windowed	Nonwindowed
Windowed date field first operand	Windowed	Windowed	Windowed
Expanded date field first operand	Nonwindowed	Windowed	Nonwindowed

Note: When compared with windowed date fields, nondates are assumed to contain a windowed year relative to 1900. For details, see item 3 under the definition of "Windowed" comparison.

Relation conditions can contain arithmetic expressions. For information about the treatment of date fields in arithmetic expressions, see "Arithmetic with date fields" on page 237.

Data pointer relation conditions

Only EQUAL and NOT EQUAL are allowed as relational operators when specifying pointer data items.

Pointer data items are items defined explicitly as USAGE POINTER, or are ADDRESS OF special registers, which are implicitly defined as USAGE POINTER.

The operands are equal if the two addresses used in the comparison would both result in the same storage location.

This relation condition is allowed in IF, PERFORM, EVALUATE, and SEARCH format-1 statements. It is not allowed in SEARCH format-2 (SEARCH ALL) statements because there is no meaningful ordering that can be applied to pointer data items.

Format 2: data-pointer relation condition

```
►►─┬─ ADDRESS OF ── identifier-1 ─┬─┬─────────┬─┬─────────┬─ EQUAL ─┬─────────┬──►
   ├──────── identifier-2 ────────┤ └─ IS ────┘ └─ NOT ────┘         └─ TO ────┘
   ├──────────── NULL ────────────┤                                   │
   └──────────── NULLS ───────────┘                                   └──────── = ────┘

   ►─┬─ ADDRESS OF ── identifier-3 ─┬──►◄
     ├──────── identifier-4 ────────┤
     ├──────────── NULL ────────────┤
     └──────────── NULLS ───────────┘
```

identifier-1 , identifier-3
Can specify any level item defined in the LINKAGE SECTION, except 66 and 88.

identifier-2 , identifier-4
Must be described as USAGE POINTER.

NULL, NULLS
Can be used only if the other operand is defined as USAGE POINTER. That is, NULL=NULL is not allowed.

The following table summarizes the permissible comparisons for USAGE POINTER, NULL, and ADDRESS OF.

Table 35. ***Permissible comparisons for USAGE POINTER, NULL, and ADDRESS OF***

Permissible comparisons	**USAGE POINTER second operand**	**ADDRESS OF second operand**	**NULL or NULLS second operand**
USAGE POINTER first operand	Yes	Yes	Yes
ADDRESS OF first operand	Yes	Yes	Yes
NULL/NULLS first operand	Yes	Yes	No

Yes
Comparison allowed only for EQUAL, NOT EQUAL

No
No comparison allowed

Procedure-pointer and function-pointer relation conditions

Only EQUAL and NOT EQUAL are allowed as relational operators when specifying procedure-pointer or function-pointer data items in a relation condition.

Procedure-pointer data items are defined explicitly as USAGE PROCEDURE-POINTER. Function-pointer data items are defined explicitly as USAGE FUNCTION-POINTER.

The operands are equal if the two addresses used in the comparison would both result in the same storage location.

This relation condition is allowed in IF, PERFORM, EVALUATE, and SEARCH format-1 statements. It is not allowed in SEARCH format-2 (SEARCH ALL) statements, because there is no meaningful ordering that can be applied to procedure-pointer data items.

Format 3: procedure-pointer and function-pointer relation condition

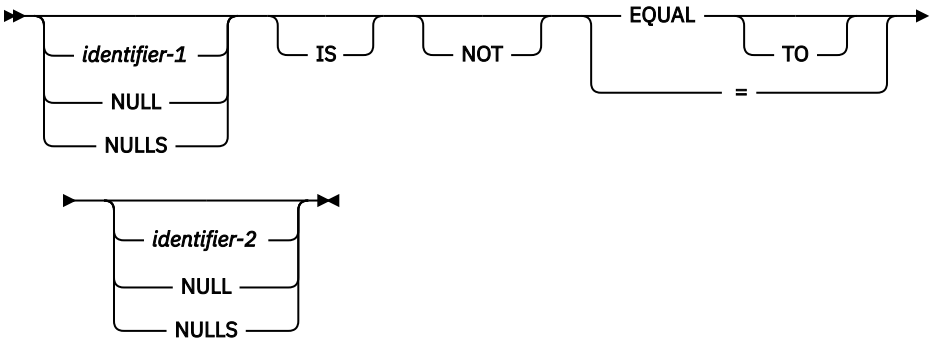

identifier-1 , identifier-2
Must be described as USAGE PROCEDURE-POINTER or USAGE FUNCTION-POINTER. *identifier-1* and *identifier-2* need not be described the same.

NULL, NULLS
Can be used only if the other operand is defined as USAGE FUNCTION-POINTER or USAGE PROCEDURE-POINTER. That is, NULL=NULL is not allowed.

Sign condition

The sign condition determines whether the algebraic value of a numeric operand is greater than, less than, or equal to zero.

Format: sign condition

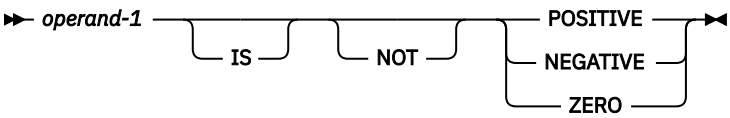

operand-1
Must be defined as a numeric identifier, or as an arithmetic expression that contains at least one reference to a variable. *operand-1* can be defined as a floating-point identifier.

The operand is:

- POSITIVE if its value is greater than zero
- NEGATIVE if its value is less than zero

- ZERO if its value is equal to zero

An unsigned operand is either POSITIVE or ZERO.

NOT
One algebraic test is executed for the truth value of the sign condition. For example, NOT ZERO is regarded as true when the operand tested is positive or negative in value.

Date fields in sign conditions

The operand in a sign condition can be a date field, but is treated as a nondate for the sign condition test. Thus if the operand is an identifier of a windowed date field, date windowing is not done, so the sign condition can be used to test a windowed date field for an all-zero value.

However, if the operand is an arithmetic expression, then any windowed date fields in the expression will be expanded during the computation of the arithmetic result prior to using the result for the sign condition test.

For example, given that:

- Identifier WIN-DATE is defined as a windowed date field and contains a value of zero
- Compiler option DATEPROC is in effect
- Compiler option YEARWINDOW (*starting-year*) is in effect, with a *starting-year* other than 1900

then this sign condition would evaluate to true:

```
WIN-DATE IS ZERO
```

whereas this sign condition would evaluate to false:

```
WIN-DATE + 0 IS ZERO
```

Switch-status condition

The switch-status condition determines the on or off status of a UPSI switch.

Format

```
►►─ condition-name ─►◄
```

condition-name
Must be defined in the special-names paragraph as associated with the on or off value of an UPSI switch. (See "SPECIAL-NAMES paragraph" on page 95.)

The switch-status condition tests the value associated with *condition-name*. (The value is considered to be alphanumeric.) The result of the test is true if the UPSI switch is set to the value (0 or 1) corresponding to *condition-name*. For details, see *UPSI* in the *COBOL for Linux on x86 Programming Guide*.

Complex conditions

A complex condition is formed by combining simple conditions, combined conditions, or complex conditions with logical operators, or negating those conditions with logical negation.

Each logical operator must be preceded and followed by a space. The following table shows the logical operators and their meanings.

Table 36. ***Logical operators and their meanings***		
Logical operator	**Name**	**Meaning**
AND	Logical conjunction	The truth value is true when both conditions are true.
OR	Logical inclusive OR	The truth value is true when either or both conditions are true.
NOT	Logical negation	Reversal of truth value (the truth value is true if the condition is false).

Unless modified by parentheses, the following list is the order of precedence (from highest to lowest):

1. Arithmetic operations
2. Simple conditions
3. NOT
4. AND
5. OR

The truth value of a complex condition (whether parenthesized or not) is the truth value that results from the interaction of all the stated logical operators on either of the following options:

- The individual truth values of simple conditions
- The intermediate truth values of conditions logically combined or logically negated

A complex condition can be either of the following options:

- A negated simple condition
- A combined condition (which can be negated)

Negated simple conditions

A simple condition is negated through the use of the logical operator NOT.

Format

```
►►─ NOT ── condition-1 ─►◄
```

The negated simple condition gives the opposite truth value of the simple condition. That is, if the truth value of the simple condition is true, then the truth value of that same negated simple condition is false, and vice versa.

Placing a negated simple condition within parentheses does not change its truth value. That is, the following two statements are equivalent:

```
NOT A IS EQUAL TO B.
NOT (A IS EQUAL TO B).
```

Combined conditions

Two or more conditions can be logically connected to form a combined condition.

Format

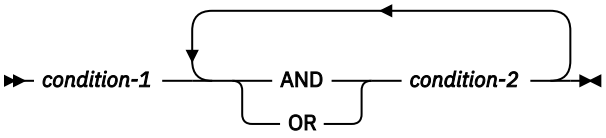

The condition to be combined can be any of the following ones:

- A simple-condition
- A negated simple-condition
- A combined condition
- A negated combined condition (that is, the NOT logical operator followed by a combined condition enclosed in parentheses)
- A combination of the preceding conditions that is specified according to the rules in the following table

Table 37. ***Combined conditions—permissible element sequences***

Combined condition element	Left most	When not leftmost, can be immediately preceded by:	Right most	When not rightmost, can be immediately followed by:
simple- condition	Yes	OR NOT AND (	Yes	OR AND)
OR AND	No	simple-condition)	No	simple-condition NOT (
NOT	Yes	OR AND (	No	simple-condition (
(	Yes	OR NOT AND (	No	simple-condition NOT (
)	No	simple-condition)	Yes	OR AND)

Parentheses are never needed when either ANDs or ORs (but not both) are used exclusively in one combined condition. However, parentheses might be needed to modify the implicit precedence rules to maintain the correct logical relation of operators and operands.

There must be a one-to-one correspondence between left and right parentheses, with each left parenthesis to the left of its corresponding right parenthesis.

The following table illustrates the relationships between logical operators and conditions C1 and C2.

Table 38. ***Logical operators and evaluation results of combined conditions***

Value for C1	Value for C2	C1 AND C2	C1 OR C2	NOT (C1 AND C2)	NOT C1 AND C2	NOT (C1 OR C2)	NOT C1 OR C2
True	True	True	True	False	False	False	True
False	True	False	True	True	True	False	True
True	False	False	True	True	False	False	False
False	False	False	False	True	False	True	True

Order of evaluation of conditions

Parentheses, both explicit and implicit, define the level of inclusiveness within a complex condition. Two or more conditions connected by only the logical operators AND or OR at the same level of inclusiveness establish a hierarchical level within a complex condition. Therefore an entire complex condition is a nested structure of hierarchical levels, with the entire complex condition being the most inclusive hierarchical level.

Within this context, the evaluation of the conditions within an entire complex condition begins at the left of the condition. The constituent connected conditions within a hierarchical level are evaluated in order from left to right, and evaluation of that hierarchical level terminates as soon as a truth value for it is determined, regardless of whether all the constituent connected conditions within that hierarchical level have been evaluated.

Values are established for arithmetic expressions and functions if and when the conditions that contain them are evaluated. Similarly, negated conditions are evaluated if and when it is necessary to evaluate the complex condition that they represent. For example:

```
NOT A IS GREATER THAN B OR A + B IS EQUAL TO C AND D IS POSITIVE
```

is evaluated as if parenthesized as follows:

```
(NOT (A IS GREATER THAN B)) OR
(((A + B) IS EQUAL TO C) AND (D IS POSITIVE))
```

Order of evaluation:

1. `(NOT (A IS GREATER THAN B))` is evaluated, giving some intermediate truth value, *t1*. If *t1* is true, the combined condition is true, and no further evaluation takes place. If *t1* is false, evaluation continues as follows.
2. `(A + B)` is evaluated, giving some intermediate result, *x*.
3. (`x IS EQUAL TO C`) is evaluated, giving some intermediate truth value, *t2*. If *t2* is false, the combined condition is false, and no further evaluation takes place. If *t2* is true, the evaluation continues as follows.
4. `(D IS POSITIVE)` is evaluated, giving some intermediate truth value, *t3*. If *t3* is false, the combined condition is false. If *t3* is true, the combined condition is true.

Example

The following example depicts an IF statement with two conditions combined with the logical AND operator.

```
IDENTIFICATION DIVISION.
PROGRAM-ID. COMBINE.

DATA DIVISION.
WORKING-STORAGE SECTION.
01 N1 PIC 9(2) VALUE 30.
01 N2 PIC 9(2) VALUE 45.
01 N3 PIC 9(2) VALUE 30.

PROCEDURE DIVISION.
A000-FIRST-PARA.

   IF N1 IS LESS THAN N2 AND N1 = N3 THEN
         DISPLAY 'BOTH CONDITIONS OK'
   ELSE
         DISPLAY 'EITHER OR BOTH CONDITIONS FAILED'
   END-IF.

   STOP RUN.
```

The example produces the following output:

```
BOTH CONDITIONS OK
```

Abbreviated combined relation conditions

When relation-conditions are written consecutively, any relation-condition after the first can be abbreviated by omission of the subject, or by omission of the subject and relational operator.

Format

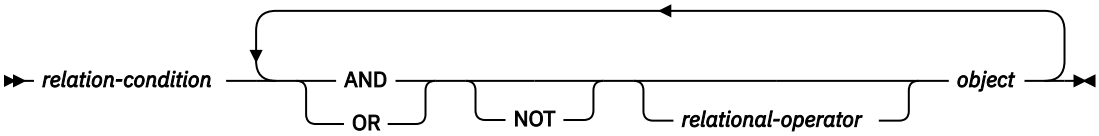

In any consecutive sequence of relation-conditions, both forms of abbreviation can be specified. The abbreviated condition is evaluated as if:

1. The last stated subject is the missing subject.
2. The last stated relational operator is the missing relational operator.

The resulting combined condition must comply with the rules for element sequences in combined conditions, as shown in “Combined conditions” on page 258.

If NOT is immediately followed by GREATER THAN, >, LESS THAN, <, EQUAL TO, or =, then the NOT participates as part of the relational operator. NOT in any other position is considered a logical operator (and thus results in a negated relation condition).

Using parentheses

You can use parentheses in combined relation conditions to specify an intended order of evaluation. Using parentheses can also help improve the readability of conditional expressions.

The following rules govern the use of parentheses in abbreviated combined relation conditions:

1. Parentheses can be used to change the order of evaluation of the logical operators AND and OR.
2. The word NOT participates as part of the relational operator when it is immediately followed by GREATER THAN, >, LESS THAN, <, EQUAL TO, or =.

3. NOT in any other position is considered a logical operator and thus results in a negated relation condition. If you use NOT as a logical operator, only the relation condition immediately following the NOT is negated; the negation is not propagated through the abbreviated combined relation condition along with the subject and relational operator.
4. The logical NOT operator can appear within a parenthetical expression that immediately follows a relational operator.
5. When a left parenthesis appears immediately after the relational operator, the relational operator is distributed to all objects enclosed in the parentheses. In the case of a "distributed" relational operator, the subject and relational operator remain current after the right parenthesis which ends the distribution. The following three restrictions apply to cases where the relational operator is distributed throughout the expression:
   a. A simple condition cannot appear within the scope of the distribution.
   b. Another relational operator cannot appear within the scope of the distribution.
   c. The logical operator NOT cannot appear immediately after the left parenthesis, which defines the scope of the distribution.
6. Evaluation proceeds from the least to the most inclusive condition.
7. There must be a one-to-one correspondence between left and right parentheses, with each left parenthesis to the left of its corresponding right parenthesis. If the parentheses are unbalanced, the compiler inserts a parenthesis and issues an E-level message. However, if the compiler-inserted parenthesis results in the truncation of the expression, you will receive an S-level diagnostic message.
8. The last stated subject is inserted in place of the missing subject.
9. The last stated relational operator is inserted in place of the missing relational operator.
10. Insertion of the omitted subject or relational operator ends when:
    a. Another simple condition is encountered.
    b. A condition-name is encountered.
    c. A right parenthesis is encountered that matches a left parenthesis that appears to the left of the subject.
11. In any consecutive sequence of relation conditions, you can use both abbreviated relation conditions that contain parentheses and those that do not.
12. Consecutive logical NOT operators cancel each other and result in an S-level message. Note, however, that an abbreviated combined relation condition can contain two consecutive NOT operators when the second NOT is part of a relational operator. For example, you can abbreviate the first condition as the second condition listed below.

```
A = B and not A not = C
A = B and not not = C
```

The following table summarizes the rules for forming an abbreviated combined relation condition.

Table 39. ***Abbreviated combined conditions: permissible element sequences***

Combined condition element	Left- most	When not leftmost, can be immediately preceded by:	Right-most	When not rightmost, can be immediately followed by:
Subject	Yes	NOT (	No	Relational operator

Table 39. ***Abbreviated combined conditions: permissible element sequences*** *(continued)*				
Combined condition element	**Left- most**	**When not leftmost, can be immediately preceded by:**	**Right-most**	**When not rightmost, can be immediately followed by:**
Object	No	Relational operator AND OR NOT (	Yes	AND OR)
Relational operator	No	Subject AND OR NOT	No	Object (
AND OR	No	Object)	No	Object Relational operator NOT (
NOT	Yes	AND OR (	No	Subject Object Relational operator (
(	Yes	Relational operator AND OR NOT (	No	Subject Object NOT (
)	No	Object)	Yes	AND OR)

The following table shows examples of abbreviated combined relation conditions, with and without parentheses, and their unabbreviated equivalents.

Table 40. ***Abbreviated combined conditions: unabbreviated equivalents***	
Abbreviated combined relation condition	**Equivalent**
A = B AND NOT < C OR D	((A = B) AND (A NOT < C)) OR (A NOT < D)
A NOT > B OR C	(A NOT > B) OR (A NOT > C)
NOT A = B OR C	(NOT (A = B)) OR (A = C)
NOT (A = B OR < C)	NOT ((A = B) OR (A < C))
NOT (A NOT = B AND C AND NOT D)	NOT ((((A NOT = B) AND (A NOT = C)) AND (NOT (A NOT = D))))

Statement categories

There are four categories of COBOL statements: imperative statements, conditional statements, delimited scope statements, and compiler-directing statements. See the following topics for more details.

Imperative statements

An *imperative statement* either specifies an unconditional action to be taken by the program, or is a conditional statement terminated by its explicit scope terminator.

A series of imperative statements can be specified wherever an imperative statement is allowed. A conditional statement that is terminated by its explicit scope terminator is also classified as an imperative statement.

For more information about explicit scope terminator, see "Delimited scope statements" on page 266.

The following lists contain the COBOL imperative statements.

Arithmetic

- ADD[1]
- COMPUTE[1]
- DIVIDE[1]
- MULTIPLY[1]
- SUBTRACT[1]

1. Without the ON SIZE ERROR or the NOT ON SIZE ERROR phrase.

Data movement

- ACCEPT (DATE, DAY, DAY-OF-WEEK, TIME)
- INITIALIZE
- INSPECT
- MOVE
- SET
- STRING[2]
- UNSTRING[2]
- XML GENERATE[3]
- XML PARSE[3]

2. Without the ON OVERFLOW or the NOT ON OVERFLOW phrase.

3. Without the ON EXCEPTION or NOT ON EXCEPTION phrase.

Ending

- STOP RUN
- EXIT PROGRAM
- GOBACK

Input-output

- ACCEPT *identifier*
- CLOSE
- DELETE[4]

- DISPLAY
- OPEN
- READ[5]
- REWRITE[4]
- START[4]
- STOP *literal*
- UNLOCK
- WRITE[6]

4. Without the INVALID KEY or the NOT INVALID KEY phrase.

5. Without the AT END or NOT AT END, and INVALID KEY or NOT INVALID KEY phrases.

6. Without the INVALID KEY or NOT INVALID KEY, and END-OF-PAGE or NOT END-OF-PAGE phrases.

Ordering

- Format 1 SORT
- MERGE
- RELEASE
- RETURN[7]

7. Without the AT END or NOT AT END phrase.

Procedure-branching

- ALTER
- CONTINUE
- Format 1 EXIT
- GO TO
- PERFORM

Program linkage

- CALL[8]
- CANCEL

8. Without the ON OVERFLOW phrase, and without the ON EXCEPTION or NOT ON EXCEPTION phrase.

Table-handling

- Format 2 SORT (table SORT)
- SET

Conditional statements

A *conditional statement* specifies that the truth value of a condition is to be determined and that the subsequent action of the object program is dependent on this truth value.

For more information about conditional expressions, see "Conditional expressions" on page 240.)

The following lists contain COBOL statements that become conditional when a *condition* (for example, ON SIZE ERROR or ON OVERFLOW) is included and when the statement is not terminated by its explicit scope terminator.

Arithmetic

- ADD ... ON SIZE ERROR
- ADD ... NOT ON SIZE ERROR
- COMPUTE ... ON SIZE ERROR
- COMPUTE ... NOT ON SIZE ERROR
- DIVIDE ... ON SIZE ERROR
- DIVIDE ... NOT ON SIZE ERROR
- MULTIPLY ... ON SIZE ERROR
- MULTIPLY ... NOT ON SIZE ERROR
- SUBTRACT ... ON SIZE ERROR
- SUBTRACT ... NOT ON SIZE ERROR

Data movement

- STRING ... ON OVERFLOW
- STRING ... NOT ON OVERFLOW
- UNSTRING ... ON OVERFLOW
- UNSTRING ... NOT ON OVERFLOW
- XML GENERATE ... ON EXCEPTION
- XML GENERATE ... NOT ON EXCEPTION
- XML PARSE ... ON EXCEPTION
- XML PARSE ... NOT ON EXCEPTION

Decision

- IF
- EVALUATE

Input-output

- DELETE ... INVALID KEY
- DELETE ... NOT INVALID KEY
- READ ... AT END
- READ ... NOT AT END
- READ ... INVALID KEY
- READ ... NOT INVALID KEY
- REWRITE ... INVALID KEY
- REWRITE ... NOT INVALID KEY
- START ... INVALID KEY
- START ... NOT INVALID KEY
- WRITE ... AT END-OF-PAGE
- WRITE ... NOT AT END-OF-PAGE
- WRITE ... INVALID KEY
- WRITE ... NOT INVALID KEY

Ordering

- RETURN ... AT END
- RETURN ... NOT AT END

Program linkage

- CALL ... ON OVERFLOW
- CALL ... ON EXCEPTION
- CALL ... NOT ON EXCEPTION

Table-handling

- SEARCH

Delimited scope statements

In general, a DELIMITED SCOPE statement uses an explicit scope terminator to turn a conditional statement into an imperative statement.

The resulting imperative statement can then be nested. Explicit scope terminators can also be used to terminate the scope of an imperative statement. Explicit scope terminators are provided for all COBOL statements that can have conditional phrases.

Unless explicitly specified otherwise, a delimited scope statement can be specified wherever an imperative statement is allowed by the rules of the language.

Explicit scope terminators

An *explicit scope terminator* marks the end of certain PROCEDURE DIVISION statements.

A conditional statement that is delimited by its explicit scope terminator is considered an imperative statement and must follow the rules for imperative statements.

These are the explicit scope terminators:

- END-ADD
- END-CALL
- END-COMPUTE
- END-DELETE
- END-DIVIDE
- END-EVALUATE
- END-IF
- END-MULTIPLY
- END-PERFORM
- END-READ
- END-RETURN
- END-REWRITE
- END-SEARCH
- END-START
- END-STRING
- END-SUBTRACT
- END-UNSTRING
- END-WRITE

- END-XML

Implicit scope terminators

At the end of any sentence, an *implicit scope terminator* is a separator period that terminates the scope of all previous statements not yet terminated.

An unterminated conditional statement cannot be contained by another statement.

Except for nesting conditional statements within IF statements, nested statements must be imperative statements and must follow the rules for imperative statements. You should not nest conditional statements.

Compiler-directing statements

A compiler-directing statement is a statement that causes the compiler to take a specific action during compilation.

For more information about statements that direct the compiler to take a specified action, see Chapter 83, “Compiler-directing statements,” on page 561.

Statement operations

The topic shows types of operations performed by COBOL statements.

COBOL statements perform the following types of operations:

- Arithmetic
- Data manipulation
- Input/output
- Procedure branching

There are several phrases common to arithmetic and data manipulation statements, such as:

- CORRESPONDING phrase
- GIVING phrase
- ROUNDED phrase
- SIZE ERROR phrases

CORRESPONDING phrase

The CORRESPONDING (CORR) phrase causes ADD, SUBTRACT, and MOVE operations to be performed on elementary data items of the same name if the alphanumeric group item or national group item to which they belong is specified.

A national group is processed as a group item when the CORRESPONDING phrase is used.

Both identifiers that follow the keyword CORRESPONDING must name group items. In this discussion, these identifiers are referred to as *identifier-1* and *identifier-2*. *identifier-1* references the sending group item. *identifier-2* references the receiving group item.

Two subordinate data items, one from *identifier-1* and one from *identifier-2*, correspond if the following conditions are true:

- In an ADD or SUBTRACT statement, both of the data items are elementary numeric data items. Other data items are ignored.
- In a MOVE statement, at least one of the data items is an elementary item, and the move is permitted by the move rules.
- The two subordinate items have the same name and the same qualifiers up to but not including *identifier-1* and *identifier-2*.

- The subordinate items are not identified by the keyword FILLER.
- Neither *identifier-1* nor *identifier-2* is described as a level 66, 77, or 88 item, and neither is described as an index data item. Neither *identifier-1* nor *identifier-2* can be reference-modified.
- Neither *identifier-1* nor *identifier-2* is described with USAGE POINTER, USAGE FUNCTION-POINTER, or USAGE PROCEDURE-POINTER.
- The subordinate items do not include a REDEFINES, RENAMES, OCCURS, USAGE INDEX, USAGE POINTER, USAGE PROCEDURE-POINTER, or USAGE FUNCTION-POINTER clause in their descriptions.

  However, *identifier-1* and *identifier-2* themselves can contain or be subordinate to items that contain a REDEFINES or OCCURS clause in their descriptions.
- The name of each subordinate data item that satisfies these conditions is unique after application of implicit qualifiers.

identifier-1, *identifier-2*, or both can be subordinate to a FILLER item.

For example, consider two data hierarchies defined as follows:

```
05 ITEM-1 OCCURS 6.
   10  ITEM-A PIC S9(3).
   10  ITEM-B PIC +99.9.
   10  ITEM-C PIC X(4).
   10  ITEM-D REDEFINES ITEM-C PIC 9(4).
   10  ITEM-E USAGE COMP-1.
   10  ITEM-F USAGE INDEX.
05 ITEM-2.
   10  ITEM-A PIC 99.
   10  ITEM-B PIC +9V9.
   10  ITEM-C PIC A(4).
   10  ITEM-D PIC 9(4).
   10  ITEM-E PIC 9(9) USAGE COMP.
   10  ITEM-F USAGE INDEX.
```

If `ADD CORR ITEM-2 TO ITEM-1(x)` is specified, `ITEM-A` and `ITEM-A(x)`, `ITEM-B` and `ITEM-B(x)`, and `ITEM-E` and `ITEM-E(x)` are considered to be corresponding and are added together. `ITEM-C` and `ITEM-C(x)` are not included because they are not numeric. `ITEM-D` and `ITEM-D(x)` are not included because `ITEM-D(x)` includes a REDEFINES clause in its data description. `ITEM-F` and `ITEM-F(x)` are not included because they are index data items. Note that `ITEM-1` is valid as either *identifier-1* or *identifier-2*.

If any of the individual operations in the ADD CORRESPONDING statement produces a size error condition, *imperative-statement-1* in the ON SIZE ERROR phrase is not executed until all of the individual additions are completed.

GIVING phrase

For arithmetic statements, the value of the identifier that follows the word GIVING is set equal to the calculated result of the arithmetic operation. Because this identifier is not involved in the computation, it can be a numeric-edited item.

ROUNDED phrase

After decimal point alignment, the number of places in the fraction of the result of an arithmetic operation is compared with the number of places provided for the fraction of the resultant identifier.

When the size of the fractional result exceeds the number of places provided for its storage, truncation occurs unless ROUNDED is specified. When ROUNDED is specified, the least significant digit of the resultant identifier is increased by 1 whenever the most significant digit of the excess is greater than or equal to 5.

When the resultant identifier is described by a PICTURE clause that contains rightmost Ps and when the number of places in the calculated result exceeds the number of integer positions specified, rounding or truncation occurs relative to the rightmost integer position for which storage is allocated.

In a floating-point arithmetic operation, the ROUNDED phrase has no effect; the result of a floating-point operation is always rounded. For more information on floating-point arithmetic expressions, see *Fixed-point contrasted with floating-point arithmetic* in the *COBOL for Linux on x86 Programming Guide*.

When the ARITH(EXTEND) or ARITH(FULL) compiler option is in effect, the ROUNDED phrase is not supported for arithmetic receivers with 31 digit positions to the right of the decimal point. For example, neither X nor Y below is valid as a receiver with the ROUNDED phrase:

```
01  X PIC V31.
01  Y PIC P(30)9(1).
    . . .
    COMPUTE X ROUNDED = A + B
    COMPUTE Y ROUNDED = A - B
```

Otherwise, the ROUNDED phrase is fully supported for extended-precision arithmetic statements.

SIZE ERROR phrases

A size error condition can occur in different ways.

- When the absolute value of the result of an arithmetic evaluation, after decimal point alignment, exceeds the largest value that can be contained in the result field.
- When division by zero occurs.
- When the result of an arithmetic statement is stored in a windowed date field and the year of the result falls outside the century window. For example, given YEARWINDOW(1940) (which specifies a century window of 1940–2039), the following SUBTRACT statement causes a size error:

  ```
  01  WINDOWED-YEAR  DATE FORMAT YY PICTURE 99
                     VALUE IS 50.
      ...
      SUBTRACT 20 FROM WINDOWED-YEAR
               ON SIZE ERROR imperative-statement
  ```

  The size error occurs because the result of the subtraction, a windowed date field, has an effective year value of 1930, which falls outside the century window. For details on how windowed date fields are treated as if they were converted to expanded date format, see “Subtraction that involves date fields” on page 238.

  For more information about how size errors can occur when using date fields, see “Storing arithmetic results that involve date fields” on page 239.
- In an exponential expression, as indicated in the following table:

Table 41. ***Exponentiation size error conditions***

Size error	Action taken when a SIZE ERROR clause is present	Action taken when a SIZE ERROR clause is not present
Zero raised to zero power	The SIZE ERROR imperative is executed.	The value returned is 1, and a message is issued.
Zero raised to a negative number	The SIZE ERROR imperative is executed.	The program is terminated abnormally.
A negative number raised to a fractional power	The SIZE ERROR imperative is executed.	The absolute value of the base is used, and a message is issued.

The size error condition applies only to final results, not to any intermediate results.

If the resultant identifier is defined with usage BINARY, COMPUTATIONAL, COMPUTATIONAL-4, or COMPUTATIONAL-5, the largest value that the resultant data item can contain is the value implied by the item's decimal PICTURE character-string, regardless of the TRUNC compiler option in effect.

If the ROUNDED phrase is specified, rounding takes place before size error checking.

When a size error occurs, the subsequent action of the program depends on whether the ON SIZE ERROR phrase is specified.

If the ON SIZE ERROR phrase is not specified and a size error condition occurs, truncation rules apply and the value of the affected resultant identifier is computed.

If the ON SIZE ERROR phrase is specified and a size error condition occurs, the value of the resultant identifier affected by the size error is not altered; that is, the error results are not placed in the receiving identifier. After completion of the execution of the arithmetic operation, the imperative statement in the ON SIZE ERROR phrase is executed, control is transferred to the end of the arithmetic statement, and the NOT ON SIZE ERROR phrase, if specified, is ignored.

For ADD CORRESPONDING and SUBTRACT CORRESPONDING statements, if an individual arithmetic operation causes a size error condition, the ON SIZE ERROR imperative statement is not executed until all the individual additions or subtractions have been completed.

If the NOT ON SIZE ERROR phrase has been specified and, after execution of an arithmetic operation, a size error condition does not exist, the NOT ON SIZE ERROR phrase is executed.

When both the ON SIZE ERROR and NOT ON SIZE ERROR phrases are specified, and the statement in the phrase that is executed does not contain any explicit transfer of control, then if necessary an implicit transfer of control is made after execution of the phrase to the end of the arithmetic statement.

Arithmetic statements

The arithmetic statements are used for computations. Individual operations are specified by the ADD, SUBTRACT, MULTIPLY, and DIVIDE statements. These individual operations can be combined symbolically in a formula that uses the COMPUTE statement.

Arithmetic statement operands

The data descriptions of operands in an arithmetic statement need not be the same. Throughout the calculation, the compiler performs any necessary data conversion and decimal point alignment.

Size of operands

If the ARITH(COMPAT) compiler option is in effect, the maximum size of each operand is 18 decimal digits. If the ARITH(EXTEND) or ARITH(FULL) compiler option is in effect, the maximum size of each operand is 31 decimal digits.

The *composite of operands* is a hypothetical data item resulting from aligning the operands at the decimal point and then superimposing them on one another.

If the ARITH(COMPAT) compiler option is in effect, the composite of operands can be a maximum of 30 digits. If the ARITH(EXTEND) or ARITH(FULL) compiler option is in effect, the composite of operands can be a maximum of 31 digits.

The following table shows how the composite of operands is determined for arithmetic statements:

Table 42. ***How the composite of operands is determined***

Statement	Determination of the composite of operands
SUBTRACT ADD	Superimposing all operands in a given statement except those following the word GIVING
MULTIPLY	Superimposing all receiving data items

*Table 42. **How the composite of operands is determined** (continued)*	
Statement	**Determination of the composite of operands**
DIVIDE	Superimposing all receiving data items except the REMAINDER data item
COMPUTE	Restriction does not apply

For example, assume that each item is defined as follows in the DATA DIVISION:

```
A  PICTURE 9(7)V9(5).
B  PICTURE 9(11)V99.
C  PICTURE 9(12)V9(3).
```

If the following statement is executed, the composite of operands consists of 17 decimal digits:

```
ADD A B TO C
```

It has the following implicit description:

```
COMPOSITE-OF-OPERANDS PICTURE 9(12)V9(5).
```

In the ADD and SUBTRACT statements, if the composite of operands is 30 digits or less with the ARITH(COMPAT) compiler option, or 31 digits or less with the ARITH(EXTEND) or ARITH(FULL) compiler option, the compiler ensures that enough places are carried so that no significant digits are lost during execution.

In all arithmetic statements, it is important to define data with enough digits and decimal places to ensure the required accuracy in the final result. For more information, see *Appendix A. Intermediate results and arithmetic precision* in the *COBOL for Linux on x86 Programming Guide*.

Overlapping operands

When operands in an arithmetic statement share part of their storage (that is, when the operands overlap), the result of the execution of such a statement is unpredictable.

Multiple results

When an arithmetic statement has multiple results, execution conceptually proceeds as follows:

1. The statement performs all arithmetic operations to find the result to be placed in the receiving items, and stores that result in a temporary location.
2. A sequence of statements transfers or combines the value of this temporary result with each single receiving field. The statements are considered to be written in the same left-to-right order in which the multiple results are listed.

For example, executing the following statement:

```
ADD A, B, C, TO C, D(C), E.
```

is equivalent to executing the following series of statements:

```
ADD A, B, C GIVING TEMP.
ADD TEMP TO C.
ADD TEMP TO D(C).
ADD TEMP TO E.
```

In the above example, TEMP is a compiler-supplied temporary result field. When the addition operation for D(C) is performed, the subscript C contains the new value of C.

Data manipulation statements

The following COBOL statements move and inspect data: ACCEPT, INITIALIZE, INSPECT, MOVE, READ, RELEASE, RETURN, REWRITE, SET, STRING, UNSTRING, WRITE, XML PARSE, and XML GENERATE.

Overlapping operands

When the sending and receiving fields of a data manipulation statement share a part of their storage (that is, when the operands overlap), the result of the execution of such a statement is unpredictable.

Input-output statements

COBOL input-output statements transfer data to and from files stored on external media, and also control low-volume data that is obtained from or sent to an input/output device.

In COBOL, the unit of file data made available to the program is a record. You need only be concerned with such records. Provision is automatically made for such operations as the movement of data into buffers, internal storage, validity checking, error correction (where feasible), blocking and deblocking, and volume-switching procedures.

The description of the file in the ENVIRONMENT DIVISION and the DATA DIVISION governs which input-output statements are allowed in the PROCEDURE DIVISION. Permissible statements for sequential files are shown in Table 53 on page 341 , and permissible statements for indexed files and relative files are shown in Table 54 on page 341. Permissible statements for line sequential files are shown in Table 55 on page 341.

Common processing facilities

Several common processing facilities apply to more than one input-output statement.

The common processing facilities provided are:

- "File status key" on page 272
- "Invalid key condition" on page 277
- "INTO and FROM phrases" on page 277
- "File position indicator" on page 278

Discussions in the following sections use the terms *volume* and *reel*. The term *volume* refers to all non-unit-record input-output devices. The term *reel* applies only to tape devices. Treatment of direct-access devices in the sequential access mode is logically equivalent to the treatment of tape devices.

File status key

If the FILE STATUS clause is specified in the file-control entry, a value is placed in the specified file status key (the two-character data item named in the FILE STATUS clause) during execution of any request on that file; the value indicates the status of that request.

The value is placed in the file status key before execution of any EXCEPTION/ERROR declarative, INVALID KEY phrase, or AT END phrase associated with the request.

There are two file status key data-names. One is described by *data-name-1* in the FILE STATUS clause of the file-control entry. This is a two-character data item with the first character known as file status key 1 and the second character known as file status key 2. The combinations of possible values and their meanings are shown in Table 43 on page 273.

The other file status key is described by *data-name-8* in the FILE STATUS clause of the file-control entry. *data-name-8* does not apply to line-sequential files. For more information about *data-name-8*, see "FILE STATUS clause" on page 127.

Table 43. ***File status key values and meanings***			
High-order digit	**Meaning**	**Low-order digit**	**Meaning**
0	Successful completion	0	No further information
		2	This file status value applies only to indexed files with alternate keys that allow duplicates. The input-output statement was successfully executed, but a duplicate key was detected. For a READ statement, the key value for the current key of reference was equal to the value of the same key in the next record within the current key of reference. For a REWRITE or WRITE statement, the record just written created a duplicate key value for at least one alternate record key for which duplicates are allowed.
		4	A READ statement was successfully executed, but the length of the record being processed did not conform to the fixed file attributes for that file.
		5	An OPEN statement was successfully executed, but the referenced optional file was unavailable at the time the OPEN statement was executed. The file had been created if the open mode was I-O or EXTEND.
		7	For a CLOSE statement with the NO REWIND, REEL/UNIT, or FOR REMOVAL phrase or for an OPEN statement with the NO REWIND phrase, the referenced file was on a non-reel/unit medium.
1	At-end condition	0	A sequential READ statement was attempted and no next logical record existed in the file because the end of the file had been reached. Or the first READ was attempted on an optional input file that was unavailable.
		4	A sequential READ statement was attempted for a relative file, and the number of significant digits in the relative record number was larger than the size of the relative key data item described for the file.

*Table 43. **File status key values and meanings** (continued)*			
High-order digit	**Meaning**	**Low-order digit**	**Meaning**
2	Invalid key condition	1	A sequence error exists for a sequentially accessed indexed file. The prime record key value was changed by the program between the successful execution of a READ statement and the execution of the next REWRITE statement for that file. Or the ascending requirements for successive record key values were violated.
		2	An attempt was made to write a record that would create a duplicate key in a relative file. Or an attempt was made to write or rewrite a record that would create a duplicate prime record key or a duplicate alternate record key without the DUPLICATES phrase in an indexed file.
		3	An attempt was made to randomly access a record that does not exist in the file. Or a START or random READ statement was attempted on an optional input file that was unavailable.
		4	An attempt was made to write beyond the externally defined boundaries of a relative or indexed file. Or a sequential WRITE statement was attempted for a relative file and the number of significant digits in the relative record number was larger than the size of the relative key data item described for the file.

Table 43. ***File status key values and meanings*** *(continued)*			
High-order digit	**Meaning**	**Low-order digit**	**Meaning**
3	Permanent error condition	3	An OPEN statement was unsuccessful because concatenated files were specified, but one or more of the requirements for concatenation were not satisfied. Possible violations are: • The file ORGANIZATION was not SEQUENTIAL or LINE SEQUENTIAL. • The ACCESS MODE was not SEQUENTIAL. • The OPEN mode was not INPUT. • Too many file identifiers were specified in the concatenation, or memory could not be obtained to record the file identifiers that were specified. An OPEN or READ statement was unsuccessful because a nonoptional file in a concatenation was not available. For example, the file did not exist or you did not have sufficient access permissions. *Data-name-8*, if specified, contains the original file status value, the failing file identifier, and any additional information that would have been supplied in *data-name-8* for a nonconcatenated file specification.
		4	A permanent error exists because of a boundary violation; an attempt was made to write beyond the externally defined boundaries of a sequential file.
		5	An OPEN statement with the INPUT, I-O, or EXTEND phrase was attempted on a nonoptional file that was unavailable.
		7	An OPEN statement was attempted on a file that would not support the open mode specified in the OPEN statement. Possible violations are: • The EXTEND or OUTPUT phrase was specified but the file would not support write operations. • The I-O phrase was specified but the file would not support the input and output operations permitted. • The INPUT phrase was specified but the file would not support read operations.
		8	An OPEN statement was attempted on a file previously closed with lock.
		9	The OPEN statement was unsuccessful because a conflict was detected between the fixed file attributes and the attributes specified for that file in the program. These attributes include the organization of the file (sequential, relative, or indexed), the prime record key, the alternate record keys, the code set, the maximum record size, the record type (fixed or variable), and the blocking factor.

*Table 43. **File status key values and meanings** (continued)*			
High-order digit	**Meaning**	**Low-order digit**	**Meaning**
4	Logic error condition	1	An OPEN statement was attempted for a file in the open mode.
		2	A CLOSE statement was attempted for a file not in the open mode.
		3	For a mass storage file in the sequential access mode, the last input-output statement executed for the associated file prior to the execution of a REWRITE statement was not a successfully executed READ statement. For relative and indexed files in the sequential access mode, the last input-output statement executed for the file prior to the execution of a DELETE or REWRITE statement was not a successfully executed READ statement.
		4	A boundary violation exists because an attempt was made to rewrite a record to a file and the record was not the same size as the record being replaced. Or an attempt was made to write or rewrite a record that was larger than the largest or smaller than the smallest record allowed by the RECORD IS VARYING clause of the associated file-name.
		6	A sequential READ statement was attempted on a file open in the input or I-O mode and no valid next record had been established because: • The preceding READ statement was unsuccessful but did not cause an at-end condition. • The preceding READ statement caused an at-end condition.
		7	The execution of a READ statement was attempted on a file not open in the input or I-O mode.
		8	The execution of a WRITE statement was attempted on a file not open in the I-O, output, or extend mode.
		9	The execution of a DELETE or REWRITE statement was attempted on a file not open in the I-O mode.
9	Implementor-defined condition	0	No further information.
		1	Authorization failure
		2	Logic error
		3	Resource unavailable
		4	Concurrent open error
		5	Invalid or incomplete file information
		6	File system unavailable
		8	Open failed due to locked file
		9	Record access failed due to locked record

Invalid key condition

The invalid key condition can occur during execution of a START, READ, WRITE, REWRITE, or DELETE statement. When an invalid key condition occurs, the input-output statement that caused the condition is unsuccessful.

When the invalid key condition is recognized, actions are taken in the following order:

1. If the FILE STATUS clause is specified in the file-control entry, a value is placed into the file status key to indicate an invalid key condition, as shown in Table 43 on page 273.
2. If the INVALID KEY phrase is specified in the statement that caused the condition, control is transferred to the INVALID KEY imperative statement. Any EXCEPTION/ERROR declarative procedure specified for this file is not executed. Execution then continues according to the rules for each statement specified in the imperative statement.
3. If the INVALID KEY phrase is not specified in the input-output statement for a file and an applicable EXCEPTION/ERROR procedure exists, that procedure is executed. The NOT INVALID KEY phrase, if specified, is ignored.

Both the INVALID KEY phrase and the EXCEPTION/ERROR procedure can be omitted.

If the invalid key condition does not exist after execution of the input-output operation, the INVALID KEY phrase is ignored, if specified, and the following actions are taken:

- If an exception condition that is not an invalid key condition exists, control is transferred according to the rules of the USE statement following the execution of any USE AFTER EXCEPTION procedure.
- If no exception condition exists, control is transferred to the end of the input-output statement or the imperative statement specified in the NOT INVALID KEY phrase, if it is specified.

INTO and FROM phrases

The INTO and FROM phrases are valid for READ, RETURN, RELEASE, REWRITE, and WRITE statements.

You must specify an identifier that is the name of an entry in the WORKING-STORAGE SECTION or the LINKAGE SECTION, or of a record description for another previously opened file.

Format: INTO and FROM phrases of input-output statements

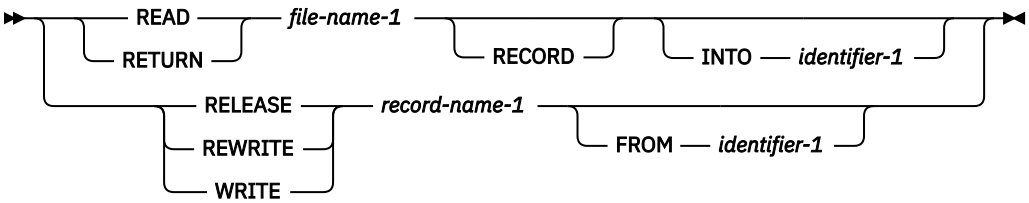

- *record-name-1* and *identifier-1* must not refer to the same storage area.
- If *record-name-1* or *identifier-1* refers to a national group item, the item is processed as an elementary data item of category national.
- The INTO phrase can be specified in a READ or RETURN statement.

  The result of the execution of a READ or RETURN statement with the INTO phrase is equivalent to the application of the following rules in the order specified:

  – The execution of the same READ or RETURN statement without the INTO phrase.
  – The current record is moved from the record area to the area specified by *identifier-1* according to the rules for the MOVE statement without the CORRESPONDING phrase. The size of the current record is determined by rules specified in the RECORD clause. If the file description entry contains a RECORD IS VARYING clause, the implied move is a group move. The implied MOVE statement does not occur if the execution of the READ or RETURN statement was unsuccessful. Any subscripting or reference-modification associated with *identifier-1* is evaluated after the record has been read or

returned and immediately before it is moved to the data item. The record is available in both the record area and the data item referenced by *identifier-1*.

- The FROM phrase can be specified in a RELEASE, REWRITE, or WRITE statement.

  The result of the execution of a RELEASE, REWRITE, or WRITE statement with the FROM phrase is equivalent to the execution of the following statements in the order specified:

  1. MOVE *identifier-1* TO *record-name-1*
  2. The same RELEASE, REWRITE, or WRITE statement without the FROM phrase

  After the execution of the RELEASE, REWRITE or WRITE statement is complete, the information in the area referenced by *identifier-1* is available even though the information in the area referenced by *record-name-1* is unavailable, except as specified by the SAME RECORD AREA clause.

File position indicator

The file position indicator is a conceptual entity used in this document to facilitate exact specification of the next record (or, alternatively, the previous record) to be accessed within a given file during certain sequences of input-output operations.

The setting of the file position indicator is affected only by the OPEN, CLOSE, READ and START statements. The concept of a file position indicator has no meaning for a file opened in the output or extend mode.

Chapter 20. PROCEDURE DIVISION statements

Statements, sentences, and paragraphs in the PROCEDURE DIVISION are executed sequentially except when a procedure branching statement such as EXIT, GO TO, PERFORM, GOBACK, or STOP is used.

ACCEPT statement

The ACCEPT statement transfers data or system date-related information into the data area referenced by the specified identifier. There is no editing or error checking of the incoming data.

Data transfer

Format 1 transfers data from an input source into the data item referenced by *identifier-1* (the receiving area). When the FROM phrase is omitted, the system input device is assumed.

Format 1: data transfer

```
►► ACCEPT ── identifier-1 ──┬──────────────────────────────┬──┬──────────────┬──►◄
                            └─ FROM ─┬─ mnemonic-name-1 ─┘  └─ END-ACCEPT ─┘
                                     └─ environment-name ─┘
```

Format 1 is useful for exceptional situations in a program when operator intervention (to supply a given message, code, or exception indicator) is required. The operator must of course be supplied with the appropriate messages with which to reply.

The input file must be a byte stream file (for example, a file consisting of text data with records delimited by a record terminator). You can create a byte stream file in your COBOL program using line-sequential file I-O or with the DISPLAY statement. (Most text editors can be used to create a byte stream file also.)

The input file cannot be a SdU, SFS, or STL file (including sequential, relative, or indexed files).

If the source of the ACCEPT statement is a file, and the receiving area is filled without using the full record delimited by the record terminator, the remainder of the input record is used in the next ACCEPT statement for the file. The record delimiter characters are removed from the input data before the input records are moved into the receiving area.

If the source for the ACCEPT statement is a keyboard, the data entered at the keyboard followed by the Enter key is treated as the input data. If the input data is shorter than the receiving area, the area is padded with spaces of the appropriate representation for the receiving area.

identifier-1

The receiving area. Can be:

- An alphanumeric group item
- A national group item
- An elementary data item of usage DISPLAY, DISPLAY-1, or NATIONAL

A national group item is processed as an elementary data item of category national.

If the description of *identifier-1* contains a TYPE clause, the type-name referenced in that clause must be elementary.

© Copyright IBM Corp. 2021, 2025

If identifier-1 is of usage NATIONAL and the source of the input data is a keyboard, the input is converted from the native code page (the code page indicated by the runtime locale) to national character representation.

mnemonic-name-1
Specifies the input device. *mnemonic-name-1* must be associated in the SPECIAL-NAMES paragraph with an environment-name. See "SPECIAL-NAMES paragraph" on page 95.

environment-name
Identifies the source of input data. An environment-name from the names given in Table 5 on page 98 can be specified.

ACCEPT with an environment-name uses the source associated with that environment-name by environment variable assignment in the operating environment. If the environment variable that corresponds to the COBOL environment name is not set, ACCEPT from SYSIN or SYSIPT is from the system logical input device; ACCEPT from CONSOLE is from the user's keyboard. For more information about environment variables, see *Example: Setting and accessing environment variables* in the *COBOL for Linux on x86 Programming Guide*.

If the device is the same as that used for READ statements for a LINE SEQUENTIAL file, results are unpredictable.

System date-related information transfer

System information contained in the specified conceptual data items DATE, DATE YYYYMMDD, DAY, DAY YYYYDDD, DAY-OF-WEEK, or TIME, can be transferred into the data item referenced by *identifier-2*. The transfer must follow the rules for the MOVE statement without the CORRESPONDING phrase.

For more information, see "MOVE statement" on page 329.

Format 2: system information transfer

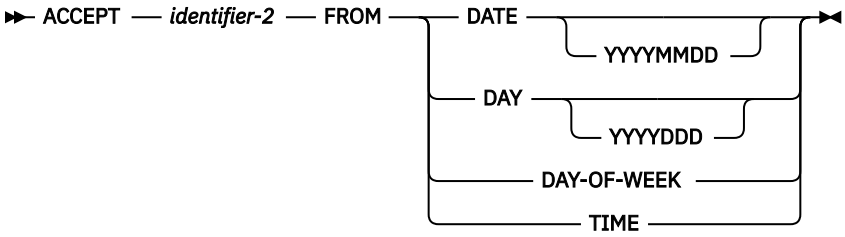

identifier-2
The receiving area. Can be:

- An alphanumeric group item
- A national group item
- An elementary data item of one of the following categories:
  - alphanumeric
  - alphanumeric-edited
  - numeric-edited (with usage DISPLAY or NATIONAL)
  - national
  - national-edited
  - numeric
  - internal floating-point
  - external floating-point (with usage DISPLAY or NATIONAL)

A national group item is processed as an elementary data item of category national.

Format 2 accesses the current date in two formats: the day of the week or the time of day as carried by the system (which can be useful in identifying when a particular run of an object program was executed). You can also use format 2 to supply the date in headings and footings.

The current date and time can also be accessed with the intrinsic function CURRENT-DATE, which also supports four-digit year values and provides additional information (see Chapter 31, “CURRENT-DATE,” on page 455).

DATE, DATE YYYYMMDD, DAY, DAY YYYYDDD, DAY-OF-WEEK, and TIME

The conceptual data items DATE, DATE YYYYMMDD, DAY, DAY YYYYDDD, DAY-OF-WEEK, and TIME implicitly have USAGE DISPLAY. Because these are conceptual data items, they cannot be described in the COBOL program.

The content of the conceptual data items is moved to the receiving area using the rules of the MOVE statement. If the receiving area is of usage NATIONAL, the data is converted to national character representation.

DATE

Has the implicit PICTURE 9(6). If the DATEPROC compiler option is in effect, then the returned value has implicit DATE FORMAT YYXXXX, and *identifier-2* must be defined with this date format.

The sequence of data elements (from left to right) is:

```
Two digits for the year
Two digits for the month
Two digits for the day
```

Thus 27 April 2003 is expressed as `030427`.

DATE YYYYMMDD

Has the implicit PICTURE 9(8). If the DATEPROC compiler option is in effect, then the returned value has implicit DATE FORMAT YYYYXXXX, and *identifier-2* must be defined with this date format.

The sequence of data elements (from left to right) is:

```
Four digits for the year
Two digits for the month
Two digits for the day
```

Thus 27 April 2003 is expressed as `20030427`.

DAY

Has the implicit PICTURE 9(5). If the DATEPROC compiler option is in effect, then the returned value has implicit DATE FORMAT YYXXX, and *identifier-2* must be defined with this date format.

The sequence of data elements (from left to right) is:

```
Two digits for the year
Three digits for the day
```

Thus 27 April 2003 is expressed as `03117`.

DAY YYYYDDD

Has the implicit PICTURE 9(7). If the DATEPROC compiler option is in effect, then the returned value has implicit DATE FORMAT YYYYXXX, and *identifier-2* must be defined with this date format.

The sequence of data elements (from left to right) is:

```
Four digits for the year
Three digits for the day
```

Thus 27 April 2003 is expressed as `2003117`.

DAY-OF-WEEK

Has the implicit PICTURE 9(1).

The single data element represents the day of the week according to the following values:

```
1 represents Monday           5 represents Friday
2 represents Tuesday          6 represents Saturday
3 represents Wednesday        7 represents Sunday
4 represents Thursday
```

Thus Wednesday is expressed as 3.

TIME

Has the implicit PICTURE 9(8).

The sequence of data elements (from left to right) is:

```
Two digits for hour of day
Two digits for minute of hour
Two digits for second of minute
Two digits for hundredths of second
```

Thus 2:41 PM is expressed as `14410000`.

Example of the ACCEPT statement

This topic lists an example for the ACCEPT statement.

```
       IDENTIFICATION DIVISION.
        PROGRAM-ID. ACCPTST.
        ENVIRONMENT DIVISION.
        DATA DIVISION.
        WORKING-STORAGE SECTION.
        01 AGE                      PIC 9(3).
        01 GENDER                   PIC X(1).
        PROCEDURE DIVISION.
            ACCEPT AGE.
            ACCEPT GENDER.
            EVALUATE TRUE ALSO TRUE
               WHEN AGE > 60 ALSO GENDER = 'M'
                    DISPLAY 'THE MAN IS RETIRED   '
               WHEN AGE > 60 ALSO GENDER = 'F'
                    DISPLAY 'THE WOMAN IS RETIRED  '
               WHEN AGE <= 60 ALSO GENDER = 'M'
                    DISPLAY 'THE MAN IS NOT RETIRED   '
               WHEN AGE <= 60 ALSO GENDER = 'F'
                    DISPLAY 'THE WOMAN IS NOT RETIRED  '
               WHEN OTHER
                    DISPLAY 'INVALID INPUT      '
                    DISPLAY 'AGE =' AGE ' and GENDER =' GENDER
            END-EVALUATE.
            STOP RUN.
```

Put your data in `file1.dat`:

```
  64
 M
```

and export using SYSIN:

```
export SYSIN=file1.dat
```

ADD statement

The ADD statement sums two or more numeric operands and stores the result.

Format 1: ADD statement

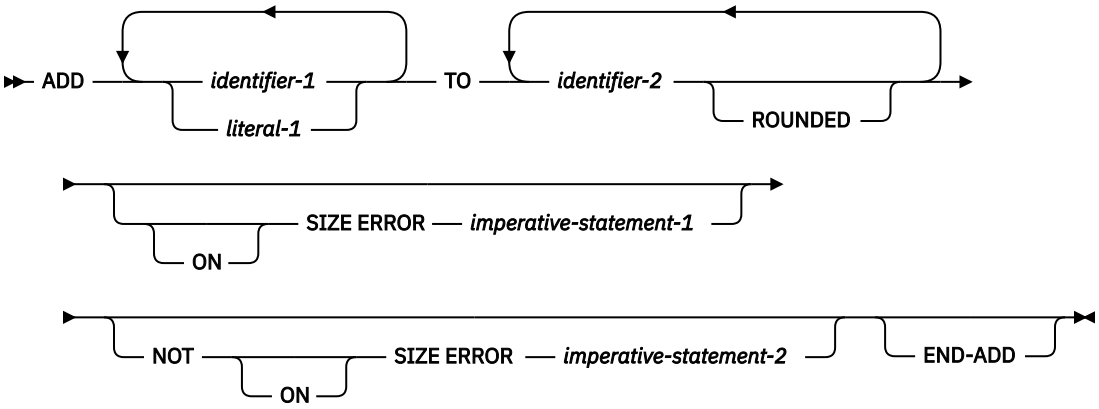

All identifiers or literals that precede the keyword TO are added together, and this sum is added to and stored in *identifier-2*. This process is repeated for each successive occurrence of *identifier-2* in the left-to-right order in which *identifier-2* is specified.

Format 2: ADD statement with GIVING phrase

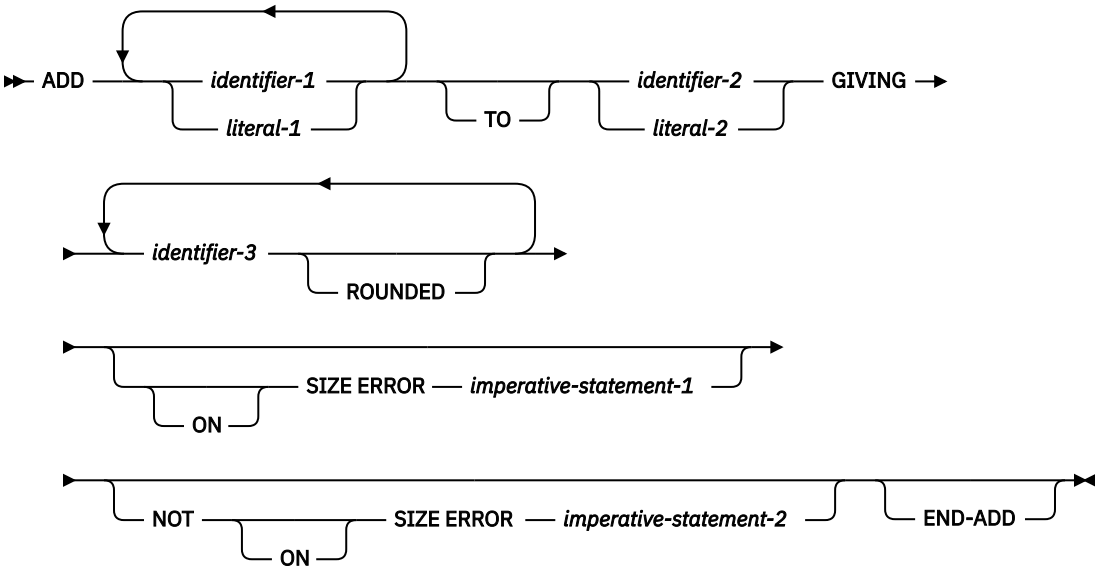

The values of the operands that precede the word GIVING are added together, and the sum is stored as the new value of each data item referenced by *identifier-3*.

Format 3: ADD statement with CORRESPONDING phrase

```
►► ADD ──┬─ CORRESPONDING ─┬─ identifier-1 ── TO ── identifier-2 ──┬──────────────►
         └──────── CORR ───┘                                      └─ ROUNDED ─────┘

►┬──────────────────────────────────────────────────────────────────►
 │ ┌──────────────────────────────────────────────────────────────┐
 └─┼──────────────────────────────────────────────────────────────┼
   │ ┌──────────────────────────────────────────────────────────┐ │
   └─┼──────────────────────────────────────────────────────────┼─┘
     │ ┌──────────────────────────────────────────────────────┐ │
     └─┼──────────────────────────────────────────────────────┼─┘
       │ ┌──────────────────────────────────────────────────┐ │
       └─┼──────────────────────────────────────────────────┼─┘
         │ ┌──────────────────────────────────────────────┐ │
         └─┼──────────────────────────────────────────────┼─┘
           │ ┌──────────────────────────────────────────┐ │
           └─┼──────────────────────────────────────────┼─┘
             │ ┌──────────────────────────────────────┐ │
             └─┼──────────────────────────────────────┼─┘
               │ ┌──────────────────────────────────┐ │
               └─┼──────────────────────────────────┼─┘
                 │ ┌──────────────────────────────┐ │
                 └─┼──────────────────────────────┼─┘
                   │ ┌──────────────────────────┐ │
                   └─┼──────────────────────────┼─┘
                     │ ┌──────────────────────┐ │
                     └─┼──────────────────────┼─┘
                       │ ┌──────────────────┐ │
                       └─┼──────────────────┼─┘
                         │ ┌──────────────┐ │
                         └─┼──────────────┼─┘
                           │ ┌──────────┐ │
                           └─┼──────────┼─┘
                             │ ┌──────┐ │
                             └─┼──────┼─┘
                               │ ┌────┐ │
                               └─┼────┼─┘
                                 │ ┌──┐ │
                                 └─┼──┼─┘
                                   │  │
   ┌─────────────────────────────────┐
   │ ┌─────────────────────────────┐ │
   │ │ ┌─────────────────────────┐ │ │
   │ │ │ ┌─────────────────────┐ │ │ │
   │ │ │ │ ┌─────────────────┐ │ │ │ │
   │ │ │ │ │ ┌─────────────┐ │ │ │ │ │
   │ │ │ │ │ │ ┌─────────┐ │ │ │ │ │ │
   │ │ │ │ │ │ │ ┌─────┐ │ │ │ │ │ │ │
   │ │ │ │ │ │ │ │ ┌───┐ │ │ │ │ │ │ │
   │ │ │ │ │ │ │ │ │   │
```

statement operands" on page 270 and the details on arithmetic intermediate results in *Appendix A. Intermediate results and arithmetic precision* in the *COBOL for Linux on x86 Programming Guide*.

ROUNDED phrase

For formats 1, 2, and 3, see "ROUNDED phrase" on page 268.

SIZE ERROR phrases

For formats 1, 2, and 3, see "SIZE ERROR phrases" on page 269.

CORRESPONDING phrase (format 3)

See "CORRESPONDING phrase" on page 267.

END-ADD phrase

This explicit scope terminator serves to delimit the scope of the ADD statement. END-ADD permits a conditional ADD statement to be nested in another conditional statement. END-ADD can also be used with an imperative ADD statement.

For more information, see "Delimited scope statements" on page 266.

ALTER statement

The ALTER statement changes the transfer point specified in a GO TO statement.

The ALTER statement encourages the use of unstructured programming practices; the EVALUATE statement provides the same function as the ALTER statement but helps to ensure that a program is well-structured.

Format

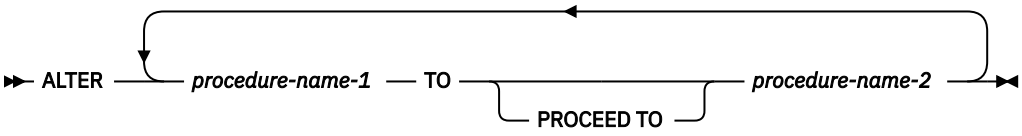

The ALTER statement modifies the GO TO statement in the paragraph named by *procedure-name-1*. Subsequent executions of the modified GO TO statement transfer control to *procedure-name-2*.

procedure-name-1
Must name a PROCEDURE DIVISION paragraph that contains only one sentence: a GO TO statement without the DEPENDING ON phrase.

procedure-name-2
Must name a PROCEDURE DIVISION section or paragraph.

Before the ALTER statement is executed, when control reaches the paragraph specified in *procedure-name-1*, the GO TO statement transfers control to the paragraph specified in the GO TO statement. After execution of the ALTER statement however, the next time control reaches the paragraph specified in *procedure-name-1*, the GO TO statement transfers control to the paragraph specified in *procedure-name-2*.

The ALTER statement acts as a program switch, allowing, for example, one sequence of execution during initialization and another sequence during the bulk of file processing.

Altered GO TO statements in programs with the INITIAL attribute are returned to their initial states each time the program is entered.

Do not use the ALTER statement in programs that have the RECURSIVE attribute.

CALL statement

The CALL statement transfers control from one object program to another within the run unit.

The program containing the CALL statement is the calling program; the program identified in the CALL statement is the called subprogram. Called programs can contain CALL statements; however, only programs defined with the RECURSIVE clause can execute a CALL statement that directly or indirectly calls itself.

Format

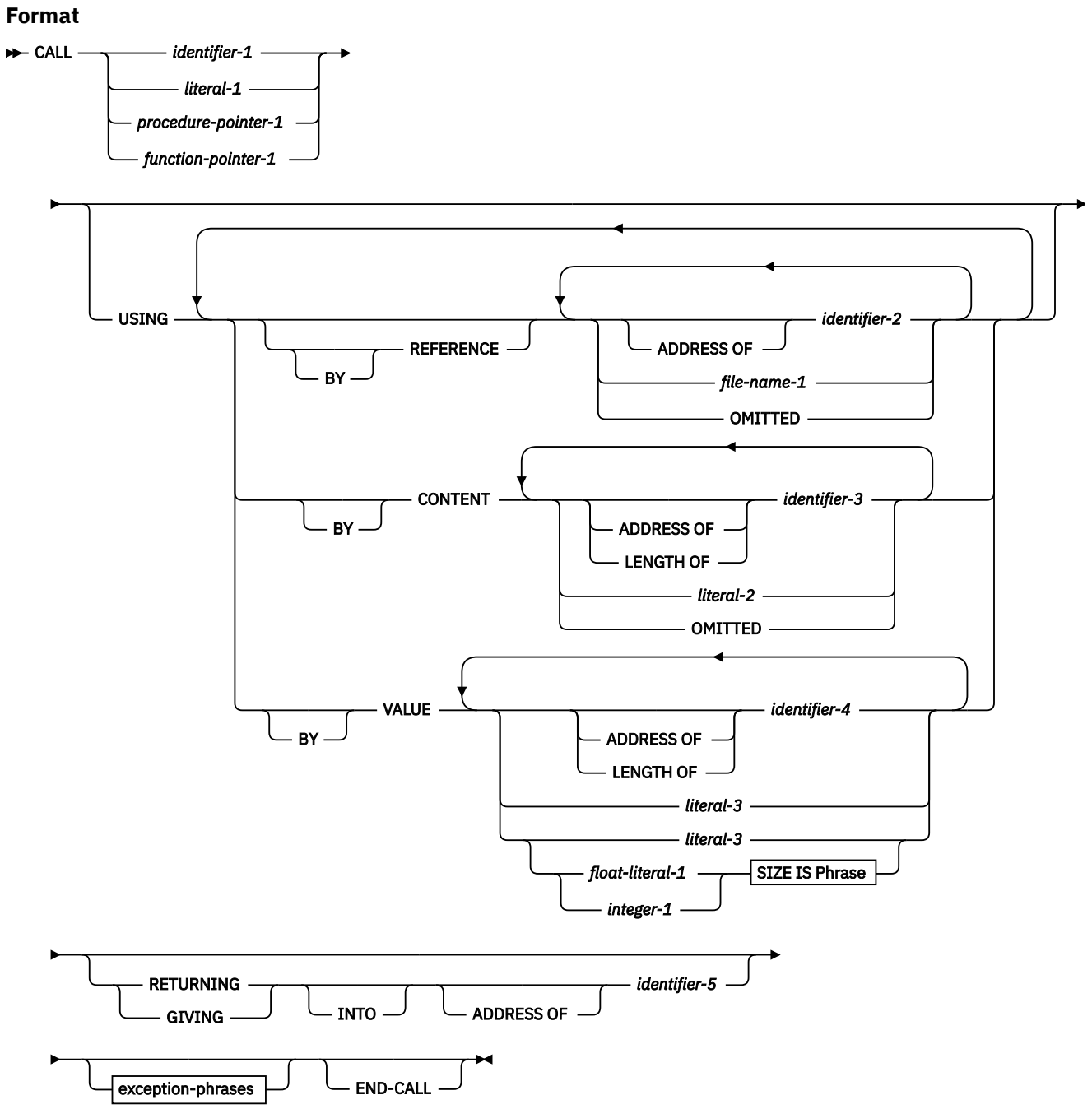

SIZE IS Phrase

```
SIZE [IS] integer-2

exception-phrases
[[ON] EXCEPTION imperative-statement-1 [not-exception-phrase]]
[[ON] OVERFLOW imperative-statement-3]

not-exception-phrase
NOT [ON] EXCEPTION imperative-statement-2
```

identifier-1, literal-1

literal-1 must be an alphanumeric literal. *identifier-1* must be an alphanumeric, alphabetic, or numeric data item described with USAGE DISPLAY such that its value can be a program-name.

The rules of formation for program-names are dependent on the PGMNAME compiler option. For details, see the discussion of program-names in Chapter 12, "PROGRAM-ID paragraph," on page 87 and also the description of *PGMNAME* in the *COBOL for Linux on x86 Programming Guide*.

identifier-1 cannot be a windowed date field.

Usage note: Do not specify the name of a class in the CALL statement.

procedure-pointer-1

Must be defined with USAGE IS PROCEDURE-POINTER and must be set to a valid program entry point; otherwise, the results of the CALL statement are undefined.

After a program has been canceled by COBOL, released by PL/I or C, or deleted by assembler, any procedure-pointers that had been set to that program's entry point are no longer valid.

function-pointer-1

Must be defined with USAGE IS FUNCTION-POINTER and must be set to a valid function or program entry point; otherwise, the results of the CALL statement are undefined.

After a program has been canceled by COBOL, released by PL/I or C, or deleted by the assembler, any function-pointers that had been set to that function or program's entry point are no longer valid.

When the called subprogram is to be entered at the beginning of the PROCEDURE DIVISION, *literal-1* or the contents of *identifier-1* must specify the program-name of the called subprogram.

When the called subprogram is entered through an ENTRY statement, *literal-1* or the contents of *identifier-1* must be the same as the name specified in the called subprogram's ENTRY statement.

USING phrase

The USING phrase specifies arguments that are passed to the target program.

Include the USING phrase in the CALL statement only if there is a USING phrase in the PROCEDURE DIVISION header or the ENTRY statement through which the called program is run. The number of operands in each USING phrase must be identical.

For more information about the USING phrase, see "The PROCEDURE DIVISION header" on page 232.

The sequence of the operands in the USING phrase of the CALL statement and in the corresponding USING phrase in the called subprogram's PROCEDURE DIVISION header or ENTRY statement determines

the correspondence between the operands used by the calling and called programs. This correspondence is positional.

The values of the parameters referenced in the USING phrase of the CALL statement are made available to the called subprogram at the time the CALL statement is executed. The description of the data items in the called program must describe the same number of character positions as the description of the corresponding data items in the calling program.

The BY CONTENT, BY REFERENCE, and BY VALUE phrases apply to parameters that follow them until another BY CONTENT, BY REFERENCE, or BY VALUE phrase is encountered. BY REFERENCE is assumed if you do not specify a BY CONTENT, BY REFERENCE, or BY VALUE phrase prior to the first parameter.

BY REFERENCE phrase

If the BY REFERENCE phrase is either specified or implied for a parameter, the corresponding data item in the calling program occupies the same storage area as the data item in the called program.

identifier-2
Can be any data item of any level in the DATA DIVISION. *identifier-2* cannot be a function-identifier.

If it is defined in the LINKAGE SECTION or FILE SECTION, you must have already provided addressability for *identifier-2* prior to invocation of the CALL statement. You can do this by coding either one of the following: `SET ADDRESS OF identifier-2 TO pointer` or `PROCEDURE/ENTRY USING`.

file-name-1
A file-name for a sequentially organized file. See *Passing data* in the *COBOL for Linux on x86 Programming Guide* for details on using file-name with the CALL statement.

ADDRESS OF *identifier-2*
identifier-2 must be a level-01 or level-77 item defined in the LINKAGE SECTION.

OMITTED
Indicates that no argument is passed.

BY CONTENT phrase

If the BY CONTENT phrase is specified or implied for a parameter, the called program cannot change the value of this parameter as referenced in the CALL statement's USING phrase, though the called program can change the value of the data item referenced by the corresponding data-name in the called program's PROCEDURE DIVISION header. Changes to the parameter in the called program do not affect the corresponding argument in the calling program.

identifier-3
Can be any data item of any level in the DATA DIVISION. *identifier-3* cannot be a function identifier.

If defined in the LINKAGE SECTION or FILE SECTION, you must have already provided addressability for *identifier-3* prior to invocation of the CALL statement. You can do this by coding one of the following phrases:

- `SET ADDRESS OF identifier-3 TO pointer`
- `PROCEDURE DIVISION USING`
- `ENTRY USING`

literal-2
Can be:

- An alphanumeric literal
- A boolean literal
- A figurative constant (except ALL *literal* or NULL/NULLS)
- A DBCS literal

- A national literal

LENGTH OF special register
For information about the LENGTH OF special register, see "LENGTH OF" on page 20.

ADDRESS OF *identifier-3*
identifier-3 must be a data item of any level except 66 or 88 defined in the LINKAGE SECTION, the WORKING-STORAGE SECTION, or the LOCAL-STORAGE SECTION.

OMITTED
Indicates that no argument is passed.

For alphanumeric literals, the called subprogram should describe the parameter as `PIC X(n) USAGE DISPLAY`, where *n* is the number of characters in the literal.

For DBCS literals, the called subprogram should describe the parameter as `PIC G(n) USAGE DISPLAY-1`, or `PIC N(n)` with implicit or explicit USAGE DISPLAY-1, where *n* is the length of the literal.

For national literals, the called subprogram should describe the parameter as `PIC N(n)` with implicit or explicit USAGE NATIONAL, where *n* is the length of the literal.

BY VALUE phrase

The BY VALUE phrase applies to all arguments that follow until overridden by another BY REFERENCE or BY CONTENT phrase.

If the BY VALUE phrase is specified or implied for an argument, the value of the argument is passed, not a reference to the sending data item. The called program can modify the formal parameter that corresponds to the BY VALUE argument, but any such changes do not affect the argument because the called program has access to a temporary copy of the sending data item.

Although BY VALUE arguments are primarily intended for communication with non-COBOL programs (such as C), they can also be used for COBOL-to-COBOL invocations. In this case, BY VALUE must be specified or implied for both the argument in the CALL USING phrase and the corresponding formal parameter in the PROCEDURE DIVISION USING phrase.

identifier-4
Must be an elementary data item in the DATA DIVISION. It must be one of the following items:

- Binary (USAGE BINARY, COMP, COMP-4, or COMP-5)
- Floating point (USAGE COMP-1 or COMP-2)
- Function-pointer (USAGE FUNCTION-POINTER)
- Pointer (USAGE POINTER)
- Procedure-pointer (USAGE PROCEDURE-POINTER)
- One single-byte alphanumeric character (such as PIC X or PIC A)
- One national character (PIC N), described as an elementary data item of category national.

The following items can also be passed BY VALUE:

- Reference-modified item of USAGE DISPLAY and length 1
- Reference-modified item of USAGE NATIONAL and length 1
- SHIFT-IN and SHIFT-OUT special registers
- LINAGE-COUNTER special register when it is USAGE BINARY

ADDRESS OF *identifier-4*
identifier-4 must be a data item of any level except 66 or 88 defined in the LINKAGE SECTION, the WORKING-STORAGE SECTION, or the LOCAL-STORAGE SECTION.

LENGTH OF special register
A LENGTH OF special register passed BY VALUE is treated as a PIC 9(9) binary when the **ADDR(32)** compiler option is specified, or as a PIC 9(18) binary when the **ADDR(64)** compiler option is specified. For information about the LENGTH OF special register, see "LENGTH OF" on page 20.

literal-3

Must be of one of the following types:

- A boolean literal
- A numeric literal
- A figurative constant ZERO
- A one-character alphanumeric literal
- A one-character national literal
- A symbolic character
- A single-byte figurative constant
  - SPACE
  - QUOTE
  - HIGH-VALUE
  - LOW-VALUE

ZERO is treated as a numeric value; a fullword binary zero is passed.

If *literal-3* is a fixed-point numeric literal, it must have a precision of nine or fewer digits. In this case, a fullword binary representation of the literal value is passed.

If *literal-3* is a floating-point numeric literal, an 8-byte internal floating-point (COMP-2) representation of the value is passed.

literal-3 must not be a DBCS literal.

float-literal-1

A floating-point literal is passed as an 8 byte internal float (COMP-2), unless the SIZE phrase is specified. For floating-point items the size phrase can be 4 or 8.

integer-1

Can be a signed or unsigned integer.

integer-1 is passed as a binary value. If *integer-2* is not specified then *integer-1* will be passed as a 4-byte binary value. *integer-2* specifies the size of *integer-1*. This can be one of 1, 2, 4 or 8.

RETURNING phrase

RETURNING and GIVING are equivalent.

ADDRESS OF *identifier-5*

identifier-5 must be a level-01 or level-77 item defined in the LINKAGE SECTION.

identifier-5

The RETURNING data item, which can be any data item defined in the DATA DIVISION. The return value of the called program is implicitly stored into *identifier-5*.

You can specify the RETURNING phrase for calls to functions written in COBOL, C, or in other programming languages that use C linkage conventions. If you specify the RETURNING phrase on a CALL to a COBOL subprogram:

- The called subprogram must specify the RETURNING phrase on its PROCEDURE DIVISION header.
- *identifier-5* and the corresponding PROCEDURE DIVISION RETURNING identifier in the target program must have the same PICTURE, USAGE, SIGN, SYNCHRONIZE, JUSTIFIED, and BLANK WHEN ZERO clauses (except that PICTURE clause currency symbols can differ, and periods and commas can be interchanged due to the DECIMAL POINT IS COMMA clause).

  When the target returns, its return value is assigned to *identifier-5* using the rules for the SET statement if *identifier-6* is of usage INDEX, POINTER, FUNCTION-POINTER or PROCEDURE-POINTER. When *identifier-5* is of any other usage, the rules for the MOVE statement are used.

The CALL ... RETURNING data item is an output-only parameter. On entry to the called program, the initial state of the PROCEDURE DIVISION RETURNING data item has an undefined and unpredictable value. You must initialize the PROCEDURE DIVISION RETURNING data item in the called program before you reference its value. The value that is passed back to the calling program is the final value of the PROCEDURE DIVISION RETURNING data item when the called program returns.

If an EXCEPTION or OVERFLOW occurs, *identifier-5* is not changed. *identifier-5* must not be reference-modified.

The RETURN-CODE special register is not set by execution of CALL statements that include the RETURNING phrase.

Items referenced in the RETURNING phrase of the CALL statement cannot contain the TYPE phrase.

ON EXCEPTION phrase

An exception condition occurs when the called subprogram cannot be made available. At that time, one of the following two actions will occur:

1. If the ON EXCEPTION phrase is specified, control is transferred to *imperative-statement-1*. Execution then continues according to the rules for each statement specified in *imperative-statement-1*. If a procedure branching or conditional statement that causes explicit transfer of control is executed, control is transferred in accordance with the rules for that statement. Otherwise, upon completion of the execution of *imperative-statement-1*, control is transferred to the end of the CALL statement and the NOT ON EXCEPTION phrase, if specified, is ignored.
2. If the ON EXCEPTION phrase is not specified in the CALL statement, the NOT ON EXCEPTION phrase, if specified, is ignored.

NOT ON EXCEPTION phrase

If an exception condition does not occur (that is, the called subprogram can be made available), control is transferred to the called program. After control is returned from the called program, control is transferred to:

- *imperative-statement-2*, if the NOT ON EXCEPTION phrase is specified.
- The end of the CALL statement in any other case. (If the ON EXCEPTION phrase is specified, it is ignored.)

If control is transferred to *imperative-statement-2*, execution continues according to the rules for each statement specified in *imperative-statement-2*. If a procedure branching or conditional statement that causes explicit transfer of control is executed, control is transferred in accordance with the rules for that statement. Otherwise, upon completion of the execution of *imperative-statement-2*, control is transferred to the end of the CALL statement.

ON OVERFLOW phrase

The ON OVERFLOW phrase has the same effect as the ON EXCEPTION phrase.

END-CALL phrase

This explicit scope terminator serves to delimit the scope of the CALL statement. END-CALL permits a conditional CALL statement to be nested in another conditional statement. END-CALL can also be used with an imperative CALL statement.

For more information, see “Delimited scope statements” on page 266.

CANCEL statement

The CANCEL statement ensures that the referenced subprogram is entered in initial state the next time that it is called.

Format

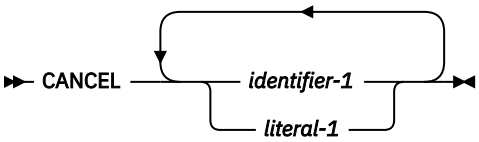

identifier-1, literal-1

literal-1 must be an alphanumeric literal. *identifier-1* must be an alphanumeric, alphabetic, or zoned decimal data item such that its value can be a program-name. The rules of formation for program-names are dependent on the PGMNAME compiler option. For details, see the discussion of program-names in Chapter 12, "PROGRAM-ID paragraph," on page 87 and the description of *PGMNAME* in the *COBOL for Linux on x86 Programming Guide*.

identifier-1 cannot be a windowed date field.

literal-1 or the contents of *identifier-1* must be the same as a literal or the contents of an identifier specified in an associated CALL statement.

Do not specify the name of a class or a method in the CANCEL statement.

After a CANCEL statement for a called subprogram has been executed, that subprogram no longer has a logical connection to the program. The contents of data items in external data records described by the subprogram are not changed when that subprogram is canceled. If a CALL statement is executed later by any program in the run unit naming the same subprogram, that subprogram is entered in its initial state.

When a CANCEL statement is executed, all programs contained within the program referenced in the CANCEL statement are also canceled. The result is the same as if a valid CANCEL were executed for each contained program in the reverse order in which the programs appear in the separately compiled program.

A CANCEL statement closes all open files that are associated with an internal file connector in the program named in an explicit CANCEL statement. USE procedures associated with those files are not executed.

You can cancel a called subprogram in any of the following ways:

- By referencing it as the operand of a CANCEL statement
- By terminating the run unit of which the subprogram is a member
- By executing an EXIT PROGRAM statement or a GOBACK statement in the called subprogram if that subprogram possesses the initial attribute

No action is taken when a CANCEL statement is executed if the specified program:

- Has not been dynamically called in this run unit by another IBM COBOL program.
- Has been called and subsequently canceled

In a multithreaded environment, a program cannot execute a CANCEL statement naming a program that is active on any thread. The named program must be completely inactive.

Called subprograms can contain CANCEL statements. However, a called subprogram must not execute a CANCEL statement that directly or indirectly cancels the calling program itself or that cancels any program higher than itself in the calling hierarchy. In such a case, the run unit is terminated.

A program named in a CANCEL statement must be a program that has been called and has executed an EXIT PROGRAM statement or a GOBACK statement.

A program can cancel a program that it did not call, provided that, in the calling hierarchy, the program that executes the CANCEL statement is higher than or equal to the program it is canceling. For example:

```
A calls B and B calls C    (When A receives control, it can cancel C.)
A calls B and A calls C    (When C receives control, it can cancel B.)
```

CLOSE statement

The CLOSE statement terminates the processing of volumes and files.

Format 1: CLOSE statement for sequential files

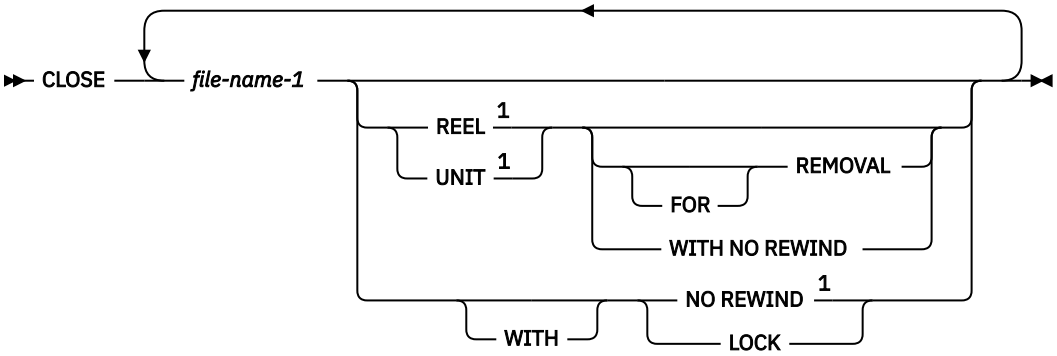

Notes:

[1] The UNIT, REEL, and NO REWIND phrases are treated as a comment, although the file status will be set to 07, indicating a successful completion of a CLOSE for a non-reel/unit medium.

Format 2: CLOSE statement for indexed and relative files

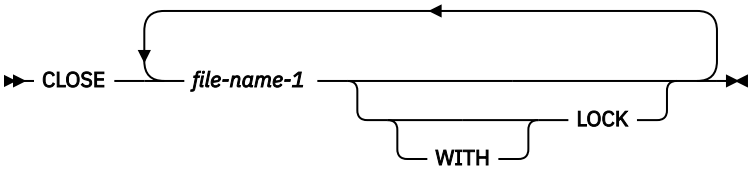

Format 3: CLOSE statement for line-sequential files

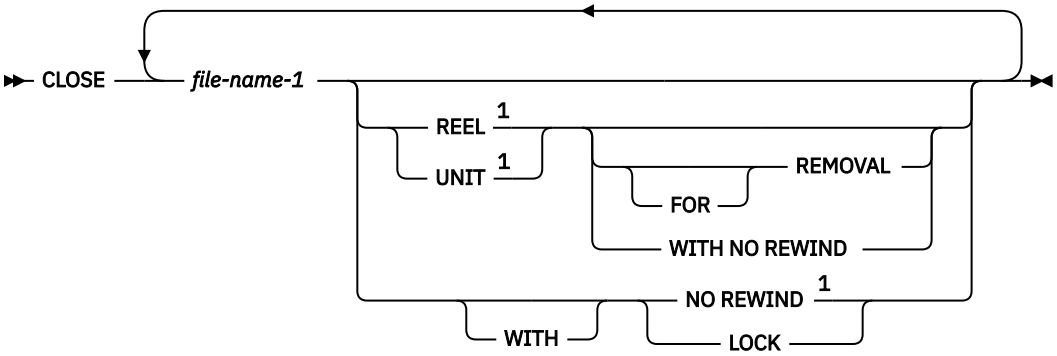

Notes:

[1] The UNIT, REEL, and NO REWIND phrases are treated as a comment, although the file status will be set to 07, indicating a successful completion of a CLOSE for a non-reel/unit medium.

file-name-1
Designates the file upon which the CLOSE statement is to operate. If more than one file-name is specified, the files need not have the same organization or access. *file-name-1* must not be a sort or merge file.

REEL and UNIT
REEL and UNIT are syntax checked, but have no effect on the execution of the program.

WITH NO REWIND and FOR REMOVAL
WITH NO REWIND and FOR REMOVAL are syntax checked, but have no effect on the execution of the program.

A CLOSE statement can be executed only for a file in an open mode. After successful execution of a CLOSE statement (without the REEL/UNIT phrase if using format 1):

- The record area associated with the file-name is no longer available. Unsuccessful execution of a CLOSE statement leaves availability of the record data undefined.
- An OPEN statement for the file must be executed before any other input/output statement can be executed for the file and before data is moved to a record description entry associated with the file.
- Any record locks and file locks held by the file connector on the closed file are released.

If the FILE STATUS clause is specified in the file-control entry, the associated file status key is updated when the CLOSE statement is executed.

If the file is in an open status and the execution of a CLOSE statement is unsuccessful, the EXCEPTION/ERROR procedure (if specified) for this file is executed.

Effect of CLOSE statement on file types

If the SELECT OPTIONAL clause is specified in the file-control entry for a file, and the file is not available at run time, standard end-of-file processing is not performed.

Files are divided into the following types:

Non-reel/unit
A file whose input or output medium is such that rewinding, reels, and units have no meaning. All files are of non-reel/unit file types.

Sequential single volume
A sequential file that is contained entirely on one volume. More than one file can be contained on this volume. All files are single volume.

Sequential multivolume
A sequential file that is contained on more than one volume. The concept of volume has no meaning.

The permissible combinations of CLOSE statement phrases are shown in the following tables:

- For sequential files: Sequential files and CLOSE statement phrases
- For indexed and relative files: Table 45 on page 295
- For line-sequential files: Table 46 on page 295

The meaning of each key letter is shown in Table 47 on page 295.

Table 44. ***Sequential files and CLOSE statement phrases***

CLOSE statement phrases	Non-reel/ unit	Sequential single-volume	Sequential multivolume
CLOSE	C	C, G	A, C, G
CLOSE WITH LOCK	C, E	C, E, G	A, C, E, G

Table 45. ***Indexed and relative file types and CLOSE statement phrases***	
CLOSE statement phrases	**Action**
CLOSE	C
CLOSE WITH LOCK	C,E

Table 46. ***Line-sequential file types and CLOSE statement phrases***	
CLOSE statement phrases	**Action**
CLOSE	C
CLOSE WITH LOCK	C,E

Table 47. ***Meanings of key letters for sequential file types***	
Key	**Actions taken**
A	**Previous volumes unaffected** **Input and input-output files**: Standard volume-switch processing is performed for all previous volumes (except those controlled by a previous CLOSE REEL/UNIT statement). Any subsequent volumes are not processed. **Output files**: Standard volume-switch processing is performed for all previous volumes (except those controlled by a previous CLOSE REEL/UNIT statement).
C	**Close file** **Input and input-output files**: If the file is at its end, and label records are specified, the standard ending label procedure is performed. Standard system closing procedures are then performed. If the file is at its end, and label records are not specified, label processing does not take place, but standard system closing procedures are performed. If the file is not at its end, standard system closing procedures are performed, but there is no ending label processing. **Output files**: If label records are specified, standard ending label procedures are performed. Standard system closing procedures are then performed. If label records are not specified, ending label procedures are not performed, but standard system closing procedures are performed.
E	**File lock**: The compiler ensures that this file cannot be opened again during this execution of the object program. If the file is a tape unit, it will be rewound and unloaded.
G	**Rewind**: The current volume is positioned at its physical beginning.

COMPUTE statement

The COMPUTE statement assigns the value of an arithmetic expression to one or more data items.

With the COMPUTE statement, arithmetic operations can be combined without the restrictions on receiving data items imposed by the rules for the ADD, SUBTRACT, MULTIPLY, and DIVIDE statements.

When arithmetic operations are combined, the COMPUTE statement can be more efficient than the separate arithmetic statements written in a series.

Format

```
▶▶─ COMPUTE ─┬─ identifier-1 ─┬─────────────┬─┬─────────┬─┬─ = ─┬─┬─────────┬─ arithmetic-expression ─▶
             ◀                └─ ROUNDED ───┘ └─ EQUAL ─┘     └─ EQUAL ─┘

  ┬──────────────────────────────────────────────────────────────────────────────────────────────────▶
  │                                  ┬─────────────────────────────────────────────────────────────┬
  └──────────────────────────────────┴─┬──────────┬─ SIZE ERROR ── imperative-statement-1 ─┬─┴
                                        └─ ON ─────┘                                        │
                                                                                            │

  ┬──────────────────────────────────────────────────────────────────────────────────────────────────▶
  │                                  ┬─────────────────────────────────────────────────────────────┬
  └──────────────────────────────────┴─ NOT ─┬──────────┬─ SIZE ERROR ── imperative-statement-2 ─┬─┴
                                             └─ ON ─────┘                                        │
                                                                                                 │

  ┬──────────────────────────────────────────────────────────────────────────────────────────────────▶◀
  │                                  ┬─────────────────┬─┴
  └──────────────────────────────────┴─ END-COMPUTE ───┘
```

identifier-1

Must name an elementary numeric item or an elementary numeric-edited item.

Can name an elementary floating-point data item.

If *identifier-1* or the result of *arithmetic expression* (or both) are date fields, see "Storing arithmetic results that involve date fields" on page 239 for details on how the result is stored in *identifier-1*. If a year-last date field is specified as *identifier-1*, the result of *arithmetic expression* must be a nondate.

arithmetic-expression

Can be any arithmetic expression, as defined in "Arithmetic expressions" on page 235.

When the COMPUTE statement is executed, the value of *arithmetic expression* is calculated and stored as the new value of each data item referenced by *identifier-1*.

An arithmetic expression consisting of a single identifier, numeric function, or literal allows the user to set the value of the data items that are referenced by *identifier-1* equal to the value of that identifier, function, or literal.

A year-last date field must not be specified in the arithmetic expression.

ROUNDED phrase

For a discussion of the ROUNDED phrase, see "ROUNDED phrase" on page 268.

SIZE ERROR phrases

For a discussion of the SIZE ERROR phrases, see "SIZE ERROR phrases" on page 269.

END-COMPUTE phrase

This explicit scope terminator serves to delimit the scope of the COMPUTE statement. END-COMPUTE permits a conditional COMPUTE statement to be nested in another conditional statement. END-COMPUTE can also be used with an imperative COMPUTE statement.

For more information, see "Delimited scope statements" on page 266.

CONTINUE statement

The CONTINUE statement is a no operation statement. CONTINUE indicates that no executable instruction is present.

Format

```
▶▶─ CONTINUE ─▶◀
```

DELETE statement

The DELETE statement removes a record from an indexed or relative file. For indexed files, the key can then be reused for record addition. For relative files, the space is then available for a new record with the same RELATIVE KEY value.

When the DELETE statement is executed, the associated file must be open in I-O mode.

Format

```
▶▶─ DELETE ─ file-name-1 ─┬──────────┬─▶
                          └─ RECORD ─┘

▶─┬──────────────
```

Sequential access mode

For a file in sequential access mode, the previous input/output statement must be a successfully executed READ statement. When the DELETE statement is executed, the system removes the record that was retrieved by that READ statement.

For a file in sequential access mode, the INVALID KEY and NOT INVALID KEY phrases must not be specified. An EXCEPTION/ERROR procedure can be specified.

Random or dynamic access mode

In random or dynamic access mode, DELETE statement execution results depend on the file organization: indexed or relative.

When the DELETE statement is executed, the system removes the record identified by the contents of the prime RECORD KEY data item for indexed files, or the RELATIVE KEY data item for relative files. If the file does not contain such a record, an INVALID KEY condition exists. (See "Invalid key condition" on page 277.)

INVALID KEY phrase

Both the INVALID KEY phrase and an applicable EXCEPTION/ERROR procedure can be omitted.

Transfer of control after the successful execution of a DELETE statement, with the NOT INVALID KEY phrase specified, is to the imperative statement associated with the phrase.

END-DELETE phrase

This explicit scope terminator serves to delimit the scope of the DELETE statement. END-DELETE permits a conditional DELETE statement to be nested in another conditional statement. END-DELETE can also be used with an imperative DELETE statement.

For more information, see "Delimited scope statements" on page 266.

DISPLAY statement

The DISPLAY statement transfers the contents of each operand to the output device. The contents are displayed on the output device in the order, left to right, in which the operands are listed.

The target file is determined by checking the COBOL environment-name (CONSOLE, SYSIN, SYSIPT, SYSOUT, SYSLIST, SYSLST, SYSPUNCH, and SYSPCH). If an environment variable is defined corresponding to the COBOL environment-name, the value of the environment-variable is used as the system file identifier. If the environment variable that corresponds to the COBOL environment name is not set, DISPLAY on SYSOUT, SYSLIST, or SYSLST is to the system logical output device (stdout).

For SYSPUNCH and SYSPCH, the DISPLAY statement fails unless the corresponding environment variable is set to point to a valid target. For more information about environment variables, see *Example: Setting and accessing environment variables* in the *COBOL for Linux on x86 Programming Guide*.

Format

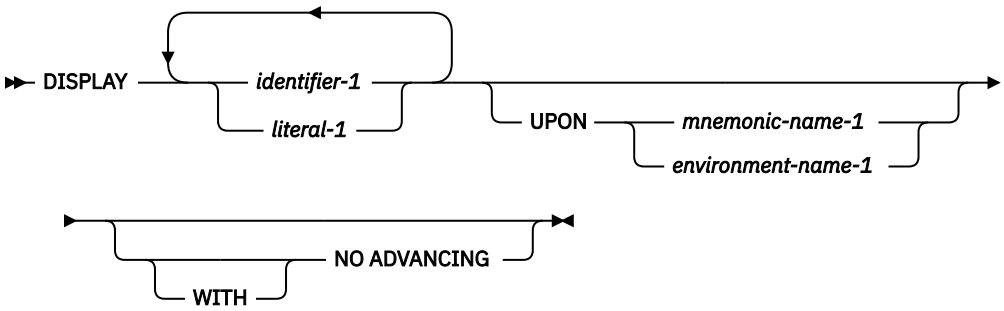

identifier-1

Identifier-1 references the data that is to be displayed. *Identifier-1* can reference any data item except an item of usage PROCEDURE-POINTER, FUNCTION-POINTER, or INDEX. *Identifier-1* cannot be an index-name.

If *identifier-1* is a binary, internal decimal, or internal floating-point data item, *identifier-1* is converted automatically to external format as follows:

- Binary and internal decimal items are converted to zoned decimal. Negative signed values cause a low-order sign overpunch.
- Internal floating-point numbers are converted to external floating-point numbers for display such that:
  - A COMP-1 item will display as if it had an external floating-point PICTURE clause of -.9(8)E-99.
  - A COMP-2 item will display as if it had an external floating-point PICTURE clause of -.9(17)E-99.

Data items defined with USAGE POINTER are converted to a zoned decimal number that has an implicit PICTURE clause of PIC 9(10).

Data items described with usage NATIONAL are converted to the code page associated with the current locale.

No other categories of data require conversion.

Date fields are treated as nondates when specified in a DISPLAY statement. That is, the DATE FORMAT is ignored and the content of the data item is transferred to the output device as is.

DBCS data items, explicitly or implicitly defined as USAGE DISPLAY-1, are transferred to the sending field of the output device.

Both DBCS and non-DBCS operands can be specified in a single DISPLAY statement.

literal-1

Can be any literal or any figurative constant as specified in "Figurative constants" on page 15. When a figurative constant is specified, only a single occurrence of that figurative constant is displayed.

UPON

environment-name-1 or the environment name associated with *mnemonic-name-1* must be associated with an output device. See "SPECIAL-NAMES paragraph" on page 95.

When the UPON phrase is omitted, the system's logical output device is assumed. The list of valid environment-names in a DISPLAY statement is shown in Table 5 on page 98.

WITH NO ADVANCING

When specified, the positioning of the output device will not be changed in any way following the display of the last operand. If the output device is capable of positioning to a specific character position, it will remain positioned at the character position immediately following the last character of

the last operand displayed. If the output device is not capable of positioning to a specific character position, only the vertical position, if applicable, is affected. This can cause overprinting.

If the WITH NO ADVANCING phrase is not specified, after the last operand has been transferred to the output device, the positioning of the output device will be reset to the leftmost position of the next line of the device.

The DISPLAY statement transfers the data in the sending field to the output device. The size of the sending field is the total byte count of all operands listed. If the output device is capable of receiving data of the same size as the data item being transferred, then the data item is transferred. If the output device is not capable of receiving data of the same size as the data item being transferred, then one of the following applies:

- If the total count is less than the device maximum, the remaining rightmost positions are padded with spaces.
- If the total count exceeds the maximum, as many records are written as are needed to display all operands. Any operand being printed or displayed when the end of a record is reached is continued in the next record.

If a DBCS operand must be split across multiple records, it will be split only on a double-byte boundary.

DIVIDE statement

The DIVIDE statement divides one numeric data item into or by others and sets the values of data items equal to the quotient and remainder.

Format 1: DIVIDE statement

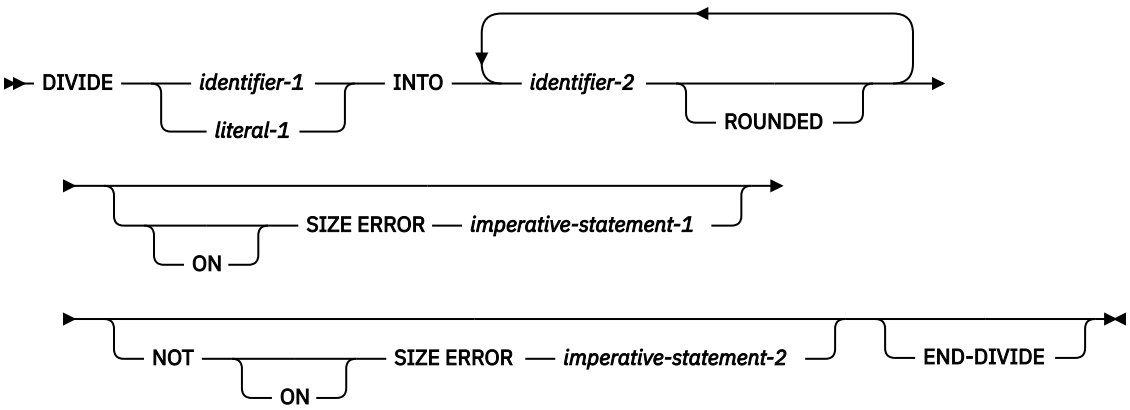

In format 1, the value of *identifier-1* or *literal-1* is divided into the value of *identifier-2*, and the quotient is then stored in *identifier-2*. For each successive occurrence of *identifier-2*, the division takes place in the left-to-right order in which *identifier-2* is specified.

Format 1 example:

The value in A is divided into the value in B and the result is stored in B. The value in A is unchanged.

```
DIVIDE A INTO B
```

The value in C is divided into the value in D, storing the answer in D. The value of C is also divided into E, storing the value in E. The value in C is unchanged.

```
DIVIDE C INTO D E
```

Format 2: DIVIDE statement with INTO and GIVING phrases

```
►► DIVIDE ─┬─ identifier-1 ─┬─ INTO ─┬─ identifier-2 ─┬─ GIVING ─►
           └─ literal-1 ────┘        └─ literal-2 ────┘

►─┬─ identifier-3 ─┬─►
  │◄───────────────┘
  └─ ROUNDED ──────┘

►─┬──────────────
```

Format 4: DIVIDE statement with INTO and REMAINDER phrases

```
►► DIVIDE ─┬─ identifier-1 ─┬─ INTO ─┬─ identifier-2 ─┬─ GIVING ── identifier-3 ──►
           └─ literal-1 ────┘        └─ literal-2 ────┘

►─┬──────────────── REMAINDER ── identifier-4 ──►
  └─ ROUNDED ───────┘

►─┬──────────────────────────────────────────────────────────────────────────┬──►
  │                                                                          │
  │                   ┌──────────────────────────────────────────────────────┐
  │                   │                                                      │
  │                   │                   ┌──────────────────────────────────┐
  │                   │                   │                                  │
  │                   │                   │                   ┌──────────────┐
  │                   │                   │                   │              │
  │                   │                   │                   │              │
  │                   │                   │                   │              │
```

identifier-3*, *identifier-4
Must name an elementary numeric or numeric-edited item.

If *identifier-3* or *identifier-4* is a date field, see "Storing arithmetic results that involve date fields" on page 239 for details on how the quotient or remainder is stored in *identifier-3*.

literal-1*, *literal-2
Must be a numeric literal.

In formats 1, 2, and 3, floating-point data items and literals can be used anywhere that a numeric data item or literal can be specified.

In formats 4 and 5, floating-point data items or literals cannot be used.

ROUNDED phrase

For formats 1, 2, and 3, see "ROUNDED phrase" on page 268.

For formats 4 and 5, the quotient used to calculate the remainder is in an intermediate field. The value of the intermediate field is truncated rather than rounded.

REMAINDER phrase

The result of subtracting the product of the quotient and the divisor from the dividend is stored in *identifier-4*. If *identifier-3*, the quotient, is a numeric-edited item, the quotient used to calculate the remainder is an intermediate field that contains the unedited quotient.

The REMAINDER phrase is invalid if the receiver or any of the operands is a floating-point item.

Any subscripts for *identifier-4* in the REMAINDER phrase are evaluated after the result of the divide operation is stored in *identifier-3* of the GIVING phrase.

SIZE ERROR phrases

For formats 1, 2, and 3, see "SIZE ERROR phrases" on page 269.

For formats 4 and 5, if a size error occurs in the quotient, no remainder calculation is meaningful. Therefore, the contents of the quotient field (*identifier-3*) and the remainder field (*identifier-4*) are unchanged.

If size error occurs in the remainder, the contents of the remainder field (*identifier-4*) are unchanged.

In either of these cases, you must analyze the results to determine which situation has actually occurred.

For information about the NOT ON SIZE ERROR phrase, see "SIZE ERROR phrases" on page 269.

END-DIVIDE phrase

This explicit scope terminator serves to delimit the scope of the DIVIDE statement. END-DIVIDE turns a conditional DIVIDE statement into an imperative statement that can be nested in another conditional statement. END-DIVIDE can also be used with an imperative DIVIDE statement.

For more information, see "Delimited scope statements" on page 266.

ENTRY statement

The ENTRY statement establishes an alternate entry point into a COBOL called subprogram.

The ENTRY statement cannot be used in:

- Programs that specify a return value using the PROCEDURE DIVISION RETURNING phrase. For details, see the discussion of the RETURNING phrase under "The PROCEDURE DIVISION header" on page 232.
- Nested program. See Chapter 11, "Nested programs," on page 81 for a description of nested programs.

When a CALL statement that specifies the alternate entry point is executed in a calling program, control is transferred to the next executable statement following the ENTRY statement.

Format

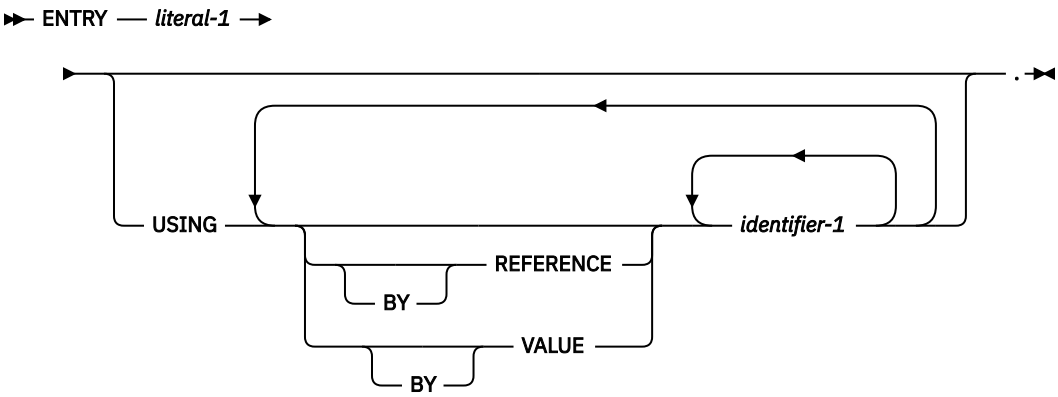

literal-1

Must be an alphanumeric literal that conform to the rules for the formation of a program-name in an outermost program (see Chapter 12, “PROGRAM-ID paragraph,” on page 87).

Must not match the program-ID or any other ENTRY literal in this program.

Must not be a figurative constant.

Execution of the called program begins at the first executable statement following the ENTRY statement whose literal corresponds to the literal or identifier specified in the CALL statement.

The entry point name on the ENTRY statement can be affected by the PGMNAME compiler option. For details, see *PGMNAME* in the *COBOL for Linux on x86 Programming Guide*.

USING phrase

For a discussion of the USING phrase, see “The PROCEDURE DIVISION header” on page 232.

EVALUATE statement

The EVALUATE statement provides a shorthand notation for a series of nested IF statements. The EVALUATE statement can evaluate multiple conditions. The subsequent action depends on the results of these evaluations.

Format

```
EVALUATE ─┬─ identifier-1 ─┬──────────────────────────────────────────────────►
          ├─ literal-1 ────┤   ┌──────────────────────────────────────────┐
          ├─ expression-1 ─┤   │                                          │
          ├─ TRUE ─────────┤   ├─ ALSO ─┬─ identifier-2 ─┬──────────────────┤
          └─ FALSE ────────┘   │          ├─ literal-2 ────┤                  │
                               │          ├─ expression-2 ─┤                  │
                               │          ├─ TRUE ─────────┤                  │
                               │          └─ FALSE ────────┘                  │
                               └──────────────────────────────────────────┘

►─┬─┬─┬─ WHEN ─ phrase 1 ─┬──────────────────────────────────────────────────┬─ imperative-statement-1 ─►
  │ │ │                  │   ┌──────────────────────────────────────────┐   │
  │ │ │                  │   │                                          │   │
  │ │ │                  ├─ ALSO ─ phrase 2 ─┬──────────────────────────┤   │
  │ │ │                  │                   │                          │   │
  │ │ │                  │                   │                          │   │
  │ │ │                  │                   │                          │
```

THROUGH and THRU
Are equivalent.

Two operands connected by a THRU phrase must be of the same class. The two operands thus connected constitute a single selection object.

The number of selection objects within each set of selection objects must be equal to the number of selection subjects.

Each selection object within a set of selection objects must correspond to the selection subject having the same ordinal position within the set of selection subjects, according to the following rules:

- Identifiers, literals, or arithmetic expressions appearing within a selection object must be valid operands for comparison to the corresponding operand in the set of selection subjects. For comparisons involving date fields, see "Comparison of date fields" on page 253.
- *condition-1*, *condition-2*, or the word TRUE or FALSE appearing as a selection object must correspond to a conditional expression or the word TRUE or FALSE in the set of selection subjects.
- The word ANY can correspond to a selection subject of any type.

END-EVALUATE phrase

This explicit scope terminator serves to delimit the scope of the EVALUATE statement. END-EVALUATE permits a conditional EVALUATE statement to be nested in another conditional statement.

For more information, see "Delimited scope statements" on page 266.

Determining values

The execution of the EVALUATE statement operates as if each selection subject and selection object were evaluated and assigned a numeric, alphanumeric, DBCS, or national character value; a range of numeric, alphanumeric, DBCS, or national character values; or a truth value.

These values are determined as follows:

- Any selection subject specified by *identifier-1*, *identifier-2*, ... and any selection object specified by *identifier-3* or *identifier-5* without the NOT or THRU phrase are assigned the value and class of the data item that they reference.
- Any selection subject specified by *literal-1*, *literal-2*, ... and any selection object specified by *literal-3* or *literal-5* without the NOT or THRU phrase are assigned the value and class of the specified literal. If *literal-3* or *literal-5* is the figurative constant ZERO, QUOTE, or SPACE, the figurative constant is assigned the class of the corresponding selection subject.
- Any selection subject in which *expression-1*, *expression-2*, ... is specified as an *arithmetic* expression, and any selection object without the NOT or THRU phrase in which *arithmetic-expression-1* or *arithmetic-expression-3* is specified, are assigned numeric values according to the rules for evaluating an arithmetic expression. (See "Arithmetic expressions" on page 235.)
- Any selection subject in which *expression-1*, *expression-2*, ... is specified as a *conditional* expression, and any selection object in which *condition-1* or *condition-2* is specified, are assigned a truth value according to the rules for evaluating conditional expressions. (See "Conditional expressions" on page 240.)
- Any selection subject or any selection object specified by the words TRUE or FALSE is assigned a truth value. The truth value "true" is assigned to those items specified with the word TRUE, and the truth value "false" is assigned to those items specified with the word FALSE.
- Any selection object specified by the word ANY is not further evaluated.
- If the THRU phrase is specified for a selection object without the NOT phrase, the range of values includes all values that, when compared to the selection subject, are greater than or equal to the first operand and less than or equal to the second operand according to the rules for comparison. If the first operand is greater than the second operand, there are no values in the range.

- If the NOT phrase is specified for a selection object, the values assigned to that item are all values not equal to the value, or range of values, that would have been assigned to the item had the NOT phrase been omitted.

Comparing selection subjects and objects

The execution of the EVALUATE statement then proceeds as if the values assigned to the selection subjects and selection objects were compared to determine whether any WHEN phrase satisfies the set of selection subjects.

This comparison proceeds as follows:

1. Each selection object within the set of selection objects for the first WHEN phrase is compared to the selection subject having the same ordinal position within the set of selection subjects. One of the following conditions must be satisfied if the comparison is to be satisfied:
   a. If the items being compared are assigned numeric, alphanumeric, DBCS, or national character values, or a range of numeric, alphanumeric, DBCS, or national character values, the comparison is satisfied if the value, or one value in the range of values, assigned to the selection object is equal to the value assigned to the selection subject according to the rules for comparison.
   b. If the items being compared are assigned truth values, the comparison is satisfied if the items are assigned identical truth values.
   c. If the selection object being compared is specified by the word ANY, the comparison is always satisfied, regardless of the value of the selection subject.
2. If the above comparison is satisfied for every selection object within the set of selection objects being compared, the WHEN phrase containing that set of selection objects is selected as the one satisfying the set of selection subjects.
3. If the above comparison is not satisfied for every selection object within the set of selection objects being compared, that set of selection objects does not satisfy the set of selection subjects.
4. This procedure is repeated for subsequent sets of selection objects in the order of their appearance in the source text, until either a WHEN phrase satisfying the set of selection subjects is selected or until all sets of selection objects are exhausted.

Executing the EVALUATE statement

After the comparison operation is completed, execution of the EVALUATE statement proceeds.

- If a WHEN phrase is selected, execution continues with the first *imperative-statement-1* following the selected WHEN phrase. Note that multiple WHEN statements are allowed for a single *imperative-statement-1*.
- If no WHEN phrase is selected and a WHEN OTHER phrase is specified, execution continues with *imperative-statement-2*.
- If no WHEN phrase is selected and no WHEN OTHER phrase is specified, execution continues with the next executable statement following the scope delimiter.
- The scope of execution of the EVALUATE statement is terminated when execution reaches the end of the scope of the selected WHEN phrase or WHEN OTHER phrase, or when no WHEN phrase is selected and no WHEN OTHER phrase is specified.

EXIT statement

The EXIT statement provides a common end point for a series of procedures. It also provides a way to exit from a section, a paragraph, or an inline PERFORM statement.

Note: The format 4 EXIT statement, EXIT FUNCTION, is not yet supported.

Format 1 (simple)

The format 1 EXIT statement provides a common end point for a series of procedures.

Format 1

```
►► paragraph-name ── . ── EXIT ──►◄
```

The format 1 EXIT statement enables you to assign a procedure-name to a given point in a program.

The format 1 EXIT statement is treated as a CONTINUE statement. Any statements following the EXIT statement are executed.

Format 2 (program)

The EXIT PROGRAM statement specifies the end of a called program and returns control to the calling program.

You can specify EXIT PROGRAM only in the PROCEDURE DIVISION of a program. EXIT PROGRAM must not be used in a declarative procedure in which the GLOBAL phrase is specified.

Format 2

```
►► EXIT PROGRAM ──►◄
```

If control reaches an EXIT PROGRAM statement in a program that does not possess the INITIAL attribute while operating under the control of a CALL statement (that is, the CALL statement is active), control returns to the point in the calling routine (program) immediately following the CALL statement. The state of the calling routine is identical to that which existed at the time it executed the CALL statement. The contents of data items and the contents of data files shared between the calling and called routine could have been changed. The state of the called program is not altered except that the ends of the ranges of all executed PERFORM statements are considered to have been reached.

The execution of an EXIT PROGRAM statement in a called program that possesses the INITIAL attribute is equivalent also to executing a CANCEL statement referencing that program.

If control reaches an EXIT PROGRAM statement, and no CALL statement is active, control passes through the exit point to the next executable statement.

If a subprogram specifies the PROCEDURE DIVISION RETURNING phrase, the value in the data item referred to by the RETURNING phrase becomes the result of the subprogram invocation.

The EXIT PROGRAM statement should be the last statement in a sequence of imperative statements. When it is not, statements following the EXIT PROGRAM will not be executed if a CALL statement is active.

When there is no next executable statement in a called program, an implicit EXIT PROGRAM statement is executed.

Format 5 (inline-perform)

The EXIT PERFORM statement controls the exit from an inline PERFORM without using a GO TO statement or a PERFORM ... THROUGH statement.

Format 5

```
►► EXIT PERFORM ──┬──────────┬──►◄
                  └─ CYCLE ──┘
```

If you specify an EXIT PERFORM statement outside of an inline PERFORM statement, the EXIT PERFORM is ignored.

When an EXIT PERFORM statement without the CYCLE phrase is executed, control is passed to an implicit CONTINUE statement. This implicit CONTINUE statement immediately follows the END-PERFORM phrase that matches the most closely preceding and unterminated inline PERFORM statement.

When an EXIT PERFORM statement with the CYCLE phrase is executed, control is passed to an implicit CONTINUE statement. This implicit CONTINUE statement immediately precedes the END-PERFORM phrase that matches the most closely preceding and unterminated inline PERFORM statement.

Format 6 (procedure)

The EXIT PARAGRAPH statement controls the exit from the middle of a paragraph without executing any following statements within the paragraph. The EXIT SECTION statement controls the exit from a section without executing any following statements within the section.

Format 6

```
►► EXIT ──┬─ PARAGRAPH ─┬──►◄
          └─ SECTION ───┘
```

EXIT PARAGRAPH

When an EXIT PARAGRAPH statement is executed, control is passed to an implicit CONTINUE statement that immediately follows the last explicit statement of the current paragraph. This return mechanism supersedes any other return mechanisms that are associated with language elements, such as PERFORM, SORT, and USE for that paragraph.

EXIT SECTION

The EXIT SECTION statement can be specified only in a section.

When an EXIT SECTION statement is executed, control is passed to an unnamed empty paragraph that immediately follows the last paragraph of the current section. This return mechanism supersedes any other return mechanisms that are associated with language elements, such as PERFORM, SORT, and USE for that section.

GOBACK statement

The GOBACK statement functions like the EXIT PROGRAM statement when it is coded as part of a called program and like the STOP RUN statement when coded in a main program.

The GOBACK statement specifies the logical end of a called program.

Format

```
►► GOBACK ──►◄
```

A GOBACK statement should appear as the only statement or as the last of a series of imperative statements in a sentence because any statements following the GOBACK are not executed. GOBACK must not be used in a declarative procedure in which the GLOBAL phrase is specified.

If control reaches a GOBACK statement while a CALL statement is active, control returns to the point in the calling program immediately following the CALL statement, as in the EXIT PROGRAM statement.

In addition, the execution of a GOBACK statement in a called program that possesses the INITIAL attribute is equivalent to executing a CANCEL statement referencing that program.

The table below shows the action taken for the GOBACK statement in a main program or a subprogram.

Termination statement	Main program	Subprogram
GOBACK	Returns to the calling program. (Can be the system, which causes the application to end.)	Returns to the calling program.

GO TO statement

The GO TO statement transfers control from one part of the PROCEDURE DIVISION to another.

The types of GO TO statements are:

- Unconditional
- Conditional
- Altered

Unconditional GO TO

The unconditional GO TO statement transfers control to the first statement in the paragraph or section identified by procedure-name, unless the GO TO statement has been modified by an ALTER statement.

For more information, see “ALTER statement” on page 285.

Format 1: unconditional GO TO statement

```
►► GO ──┬──────┬── procedure-name-1 ──►◄
        └── TO ─┘
```

procedure-name-1
Must name a procedure or a section in the same PROCEDURE DIVISION as the GO TO statement.

When the unconditional GO TO statement is not the last statement in a sequence of imperative statements, the statements following the GO TO are not executed.

When a paragraph is referred to by an ALTER statement, the paragraph must consist of a paragraph-name followed by an unconditional or altered GO TO statement.

Conditional GO TO

The conditional GO TO statement transfers control to one of a series of procedures, depending on the value of the data item referenced by *identifier-1*.

Format 2: conditional GO TO statement

```
                  ┌──────────────────┐
                  ◄──────────────────┘
►► GO ──┬──────┬── procedure-name-1 ── DEPENDING ──┬──────┬── identifier-1 ──►◄
        └── TO ─┘                                  └── ON ─┘
```

procedure-name-1
Must be a procedure or a section in the same PROCEDURE DIVISION as the GO TO statement. The number of procedure-names must not exceed 255.

identifier-1
Must be a numeric elementary data item that is an integer. *identifier-1* cannot be a windowed date field.

If 1, control is transferred to the first statement in the procedure named by the first occurrence of *procedure-name-1*.

If 2, control is transferred to the first statement in the procedure named by the second occurrence of *procedure-name-1*, and so forth.

If the value of identifier is anything other than a value within the range of 1 through n (where n is the number of procedure-names specified in this GO TO statement), no control transfer occurs. Instead, control passes to the next statement in the normal sequence of execution.

Altered GO TO

The altered GO TO statement transfers control to the first statement of the paragraph named in the ALTER statement.

You cannot specify the altered GO TO statement in the following cases:

- A program that has the RECURSIVE attribute

An ALTER statement referring to the paragraph that contains the altered GO TO statement should be executed before the GO TO statement is executed. Otherwise, the GO TO statement acts like a CONTINUE statement.

Format 3: altered GO TO statement

```
>>─ paragraph-name ─ . ─ GO ─┬──────┬─ . ─><
                             └─ TO ─┘
```

When an ALTER statement refers to a paragraph, the paragraph can consist only of the paragraph-name followed by an unconditional or altered GO TO statement.

IF statement

The IF statement evaluates a condition and provides for alternative actions in the object program, depending on the evaluation.

Format

```
>>─ IF ─ condition-1 ─┬──────┬─┬──────────────┬─┬──────────────┬─┬──────────┬─┬──────────┬─><
                      └─ THEN ─┘ │ statement-1 │ └─ NEXT SENTENCE ─┘ │ END-IF [1] │ │ ELSE │
                                 └─────◄───────┘                     └────────────┘ │      │ │      │
                                                                                    │      │ │      │
                                                                                    │      │ │      │
                                                                                    
```

condition-1
Can be any simple or complex condition, as described in "Conditional expressions" on page 240.

statement-1*, *statement-2
Can be any one of the following options:

- An imperative statement
- A conditional statement
- An imperative statement followed by a conditional statement

NEXT SENTENCE
The NEXT SENTENCE phrase transfers control to an implicit CONTINUE statement immediately following the next *separator period*.

When NEXT SENTENCE is specified with END-IF, control does not pass to the statement following the END-IF. Instead, control passes to the statement after the closest following period.

END-IF phrase

This explicit scope terminator serves to delimit the scope of the IF statement. END-IF permits a conditional IF statement to be nested in another conditional statement. For more information about explicit scope terminators, see "Delimited scope statements" on page 266.

The scope of an IF statement can be terminated by any of the following options:

- An END-IF phrase at the same level of nesting
- A separator period
- If nested, by an ELSE phrase associated with an IF statement at a higher level of nesting

Transferring control

The topic describes the actions to take when conditions tested is true or false.

If the condition tested is true, one of the following actions takes place:

- If *statement-1* is specified, *statement-1* is executed. If *statement-1* contains a procedure branching or conditional statement, control is transferred according to the rules for that statement. If *statement-1* does not contain a procedure-branching statement, the ELSE phrase, if specified, is ignored, and control passes to the next executable statement after the corresponding END-IF or separator period.
- If NEXT SENTENCE is specified, control passes to an implicit CONTINUE statement immediately following the next separator period.

If the condition tested is false, one of the following actions takes place:

- If ELSE *statement-2* is specified, *statement-2* is executed. If *statement-2* contains a procedure-branching or conditional statement, control is transferred, according to the rules for that statement. If *statement-2* does not contain a procedure-branching or conditional statement, control is passed to the next executable statement after the corresponding END-IF or separator period.
- If ELSE NEXT SENTENCE is specified, control passes to an implicit CONTINUE STATEMENT immediately following the next separator period.
- If neither ELSE *statement-2* nor ELSE NEXT SENTENCE is specified, control passes to the next executable statement after the corresponding END-IF or separator period.

When the ELSE phrase is omitted, all statements following the condition and preceding the corresponding END-IF or the separator period for the sentence are considered to be part of *statement-1*.

Nested IF statements

When an IF statement appears as *statement-1* or *statement-2*, or as part of *statement-1* or *statement-2*, that IF statement is *nested*.

When an IF statement appears as *statement-1* or *statement-2*, or as part of *statement-1* or *statement-2*, that IF statement is *nested*.

Nested IF statements are considered to be matched IF, ELSE, and END-IF combinations proceeding from left to right. Thus, any ELSE encountered is matched with the nearest preceding IF that either has not been already matched with an ELSE or has not been implicitly or explicitly terminated. Any END-IF encountered is matched with the nearest preceding IF that has not been implicitly or explicitly terminated.

INITIALIZE statement

The INITIALIZE statement sets selected categories of data fields to predetermined values. The INITIALIZE statement is functionally equivalent to one or more MOVE statements.

Format

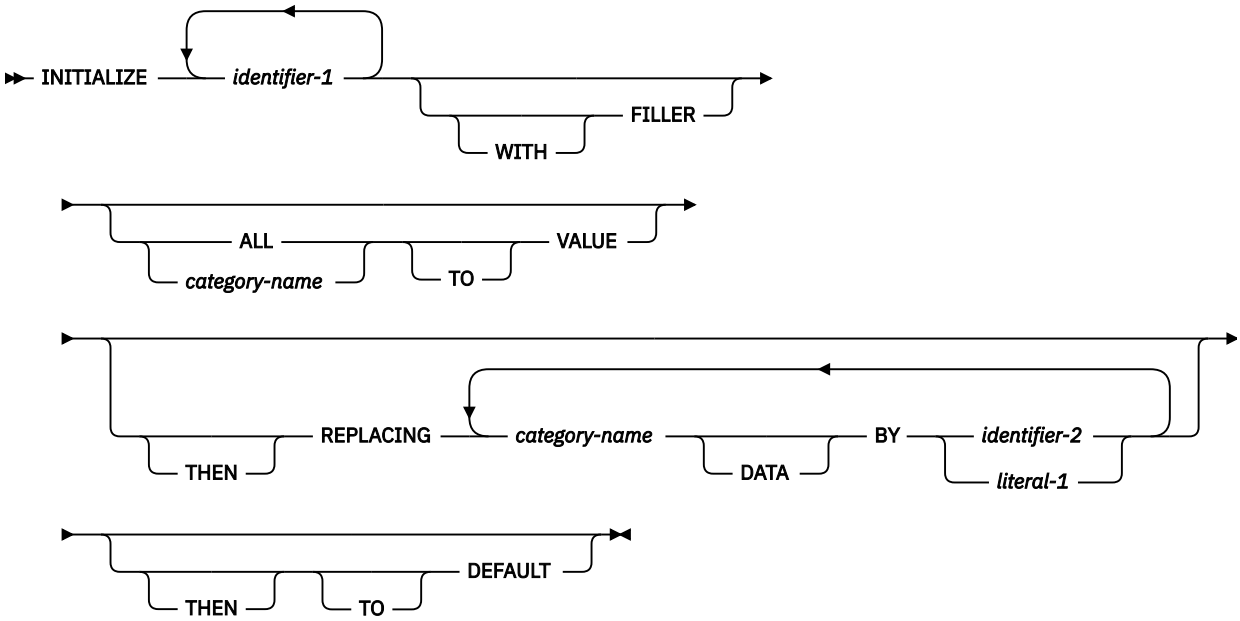

Where *category-name* is:

- ALPHABETIC
- ALPHANUMERIC
- ALPHANUMERIC-EDITED
- DBCS
- EGCS
- NATIONAL
- NATIONAL-EDITED
- NUMERIC
- NUMERIC-EDITED

identifier-1
Receiving areas.

identifier-1 must reference one of the following items:

- An alphanumeric group item
- A national group item
- An elementary data item of one of the following categories:
  - Alphabetic
  - Alphanumeric
  - Alphanumeric-edited
  - DBCS
  - External floating-point
  - Internal floating-point
  - National
  - National-edited
  - Numeric
  - Numeric-edited
- A special register that is valid as a receiving operand in a MOVE statement with *identifer-2* or *literal-1* as the sending operand.

identifier-1 references an elementary item or a group item. The effect of the execution of an INITIALIZE statement is as if a series of implicit MOVE statements, each of which has an elementary data item as its receiving operand, were executed.

When *identifier-1* references a national group item, *identifier-1* is processed as a group item.

identifier-2*, *literal-1
Sending areas.

When *identifier-2* references a national group item, *identifier-2* is processed as an elementary data item of category national.

identifier-2 must reference an elementary data item (or a national group item treated as elementary) that is valid as a sending operand in a MOVE statement with *identifier-1* as the receiving operand.

literal-1 must be a literal that is valid as a sending operand in a MOVE statement with *identifier-1* as the receiving operand.

A subscripted item can be specified for *identifier-1*. A complete table can be initialized only by specifying *identifier-1* as a group that contains the complete table.

Usage note: The data description entry for *identifier-1* can contain the DEPENDING phrase of the OCCURS clause. However, you cannot use the INITIALIZE statement to initialize a variably-located item or a variable-length item.

The data description entry for *identifier-1* must not contain a RENAMES clause.

Special registers can be specified for *identifier-1* and *identifier-2* only if they are valid receiving fields or sending fields, respectively, for the implied MOVE statements.

FILLER phrase

When the FILLER phrase is specified, the receiving elementary data items that have an explicit or implicit FILLER clause will be initialized.

VALUE phrase

When the VALUE phrase is specified:

- If ALL is specified in the VALUE phrase, it is as if all of the categories listed in *category-name* were specified.

- The same category cannot be repeated in a VALUE phrase.

REPLACING phrase

When the REPLACING phrase is specified:

- *identifier-2* must reference an item of a category that is valid as a sending operand in a MOVE statement to an item of the corresponding category specified in the REPLACING phrase.
- *literal-1* must be of a category that is valid as a sending operand in a MOVE statement to an item of the corresponding category specified in the REPLACING phrase.
- A floating-point literal, a data item of category internal floating-point, or a data item of category external floating point is treated as if it were in the NUMERIC category.
- The same category cannot be repeated in a REPLACING phrase.

With the exception of EGCS, the keyword after the word REPLACING corresponds to a category of data shown in "Classes and categories of data" on page 141.

EGCS in the REPLACING phrase is synonymous with DBCS.

INITIALIZE statement rules

The effect of the execution of an INITIALIZE statement is as if a series of implicit MOVE statements, each of which has an elementary data item as its receiving operand, were executed. The receiving operands of these implicit statements are defined in rule 1 and the sending operands are defined in rule 2.

1. The receiving operand in each implicit MOVE statement is determined by applying the rules a, b, and c in the order they appear below. Note that if a data item is not excluded as a receiver by a particular rule, it may be excluded as a receiver when a subsequent rule is applied. For example, if a data item is not excluded by rule a, that data item may still be excluded by rule b or rule c.

   a. First, the following data items are excluded as receiving operands:

      - Any identifiers that are not valid receiving operands of a MOVE statement.
      - Elementary data items that have an explicit or implicit FILLER clause if the FILLER phrase is not specified.
      - Any elementary data item subordinate to *identifier-1* whose data description entry contains a REDEFINES or RENAMES clause or is subordinate to a data item whose data description entry contains a REDEFINES clause. However, *identifier-1* might itself have a REDEFINES clause or be subordinate to a data item with a REDEFINES clause.

   b. Second, an elementary data item is a possible receiving item in either of the following cases:

      - It is explicitly referenced by *identifier-1*.
      - It is contained within the group data item referenced by *identifier-1*. If the elementary data item is a table element, each occurrence of the elementary data item is a possible receiving operand.

   c. Finally, each possible receiving operand is a receiving operand if at least one of the following conditions is true:

      - The VALUE phrase is specified, the category of the elementary data item is one of the categories specified or implied in the VALUE phrase, and either of the following conditions is true:
        - A data-item format VALUE clause is specified in the data description entry of the elementary data item.
        - A table format VALUE clause is specified in the data description entry of the elementary item and that VALUE clause specifies a value for the particular occurrence of the elementary data item.
      - The REPLACING phrase is specified and the category of the elementary data item is one of the categories specified in the REPLACING phrase.
      - The DEFAULT phrase is specified.

- Neither the REPLACING phrase nor the VALUE phrase is specified.

2. The sending operand in each implicit MOVE statement is determined as follows:
   - If the data item qualifies as a receiving operand because of the VALUE phrase, the sending operand is determined by the literal in the VALUE clause specified in the data description entry of the data item. If the data item is a table element, the literal in the VALUE clause that corresponds to the occurrence being initialized determines the sending operand. The actual sending operand is a literal that, when moved to the receiving operand with a MOVE statement, produces the same result as the initial value of the data item as produced by the application of the VALUE clause.
   - If the data item does not qualify as a receiving operand because of the VALUE phrase, but does qualify because of the REPLACING phrase, the sending operand is the *literal-1* or *identifier-2* associated with the category specified in the REPLACING phrase.
   - If the data item does not qualify in accordance with the preceding two rules, the sending operand used depends on the category of the receiving operand as follows:
     - SPACE is the implied sending item for receiving items of category alphabetic, alphanumeric, alphanumeric-edited, DBCS, EGCS, national, or national-edited.
     - ZERO is the implied sending item for receiving items of category numeric or numeric-edited.

INSPECT statement

The INSPECT statement examines characters or groups of characters in a data item.

The INSPECT statement does the following tasks:

- Counts the occurrences of a specific character (alphanumeric, DBCS, or national) in a data item (formats 1 and 3).
- Counts the occurrences of specific characters and fills all or portions of a data item with specified characters, such as spaces or zeros (formats 2 and 3).
- Converts all occurrences of specific characters in a data item to user-supplied replacement characters (format 4).

Format 1: INSPECT statement with TALLYING phrase

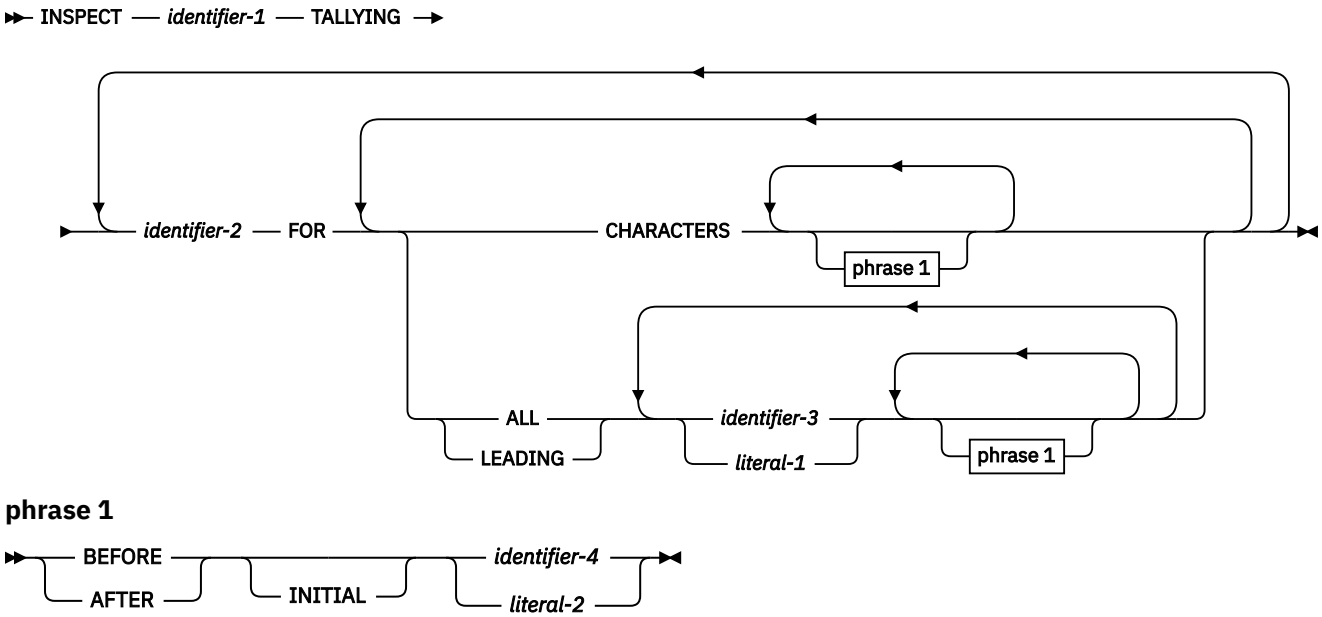

Format 2: INSPECT statement with REPLACING phrase

```
>>- INSPECT -- identifier-1 -- REPLACING -->
   |  CHARACTERS BY --+- identifier-5 -+-- [phrase 1] --|
   |                  |- literal-3 ----|
   |  ALL     --+-- identifier-3 -- BY -- identifier-5 --+-- [phrase 1] --|
   |  LEADING -|    |- literal-1 ----|    |- literal-3 ----|
   |  FIRST   -|
```

phrase 1

```
>>-+- BEFORE -+-+-------+-- identifier-4 --><
   |- AFTER  -| |INITIAL|   |- literal-2 ----|
```

Format 3: INSPECT statement with TALLYING and REPLACING phrases

```
>>- INSPECT -- identifier-1 -- TALLYING -->
   |  identifier-2 -- FOR --+-- CHARACTERS --+-- [phrase 1] --|
   |                        |  ALL     --+-- identifier-3 --+-- [phrase 1] --|
   |                        |  LEADING -|    |- literal-1 ----|
   |
   |- REPLACING -->
   |  CHARACTERS BY --+- identifier-5 -+-- [phrase 1] --|
   |                  |- literal-3 ----|
   |  ALL     --+-- identifier-3 -- BY -- identifier-5 --+-- [phrase 1] --|
   |  LEADING -|    |- literal-1 ----|    |- literal-3 ----|
   |  FIRST   -|
```

phrase 1

```
►► ┬─ BEFORE ─┬─────────────┬─ identifier-4 ─┬─►◄
   └─ AFTER ──┘  └─ INITIAL ─┘  └─ literal-2 ──┘
```

Format 4: INSPECT statement with CONVERTING phrase

```
►► INSPECT ── identifier-1 ── CONVERTING ─┬─ identifier-6 ─┬── TO ─┬─ identifier-7 ─┬──►
                                          └─ literal-4 ────┘       └─ literal-5 ────┘

   ┌──────────────────────────────────────────────────────────────────────────────┐
   ►─┬─ BEFORE ─┬─────────────┬─ identifier-4 ─┬─►◄
     └─ AFTER ──┘  └─ INITIAL ─┘  └─ literal-2 ──┘
```

identifier-1
Is the *inspected item* and can be any of the following items:

- An alphanumeric group item or a national group item
- An elementary data item described explicitly or implicitly with usage DISPLAY, DISPLAY-1, or NATIONAL. The item can have any category that is valid for the selected usage.

identifier-3 , identifier-4 , identifier-5 , identifier-6 , identifier-7
Must reference an elementary data item described explicitly or implicitly with usage DISPLAY, DISPLAY-1, or NATIONAL.

literal-1 , literal-2 , literal-3 , literal-4
Must be of category alphanumeric, DBCS, or national.

When *identifier-1* is of usage NATIONAL, literals must be of category national.

When *identifier-1* is of usage DISPLAY-1, literals must be of category DBCS.

When *identifier-1* is of usage DISPLAY, literals must be of category alphanumeric.

When *identifier-1* is of usage DISPLAY-1 (DBCS) literals may be the figurative constant SPACE.

When *identifier-1* is of usage DISPLAY or NATIONAL, literals can be any figurative constant that does not begin with the word ALL, as specified in "Figurative constants" on page 15. The figurative constant is treated as a one-character alphanumeric literal when *identifier-1* is of usage DISPLAY, and as a one-character national literal when *identifier-1* is of usage NATIONAL.

All identifiers (except *identifier-2*) must have the same usage as *identifier-1*. All literals must have category alphanumeric, DBCS, or national when *identifier-1* has usage DISPLAY, DISPLAY-1, or NATIONAL, respectively.

None of the identifiers in an INSPECT statement can be windowed date fields.

TALLYING phrase (formats 1 and 3)

This phrase counts the occurrences of a specific character or special character in a data item.

When *identifier-1* is a DBCS data item, DBCS characters are counted; when *identifier-1* is a data item of usage national, national characters (encoding units) are counted; otherwise, alphanumeric characters (bytes) are counted.

identifier-2
Is the *count field*, and must be an elementary integer item defined without the symbol P in its PICTURE character-string.

identifier-2 cannot be of category external floating-point.

You must initialize *identifier-2* before execution of the INSPECT statement begins.

Usage note: The count field can be an integer data item defined with usage NATIONAL.

identifier-3* or *literal-1
Is the *tallying field* (the item whose occurrences will be tallied).

CHARACTERS
When CHARACTERS is specified and neither the BEFORE nor AFTER phrase is specified, the count field (*identifier-2*) is increased by 1 for each character (including the space character) in the inspected item (*identifier-1*). Thus, execution of an INSPECT statement with the TALLYING phrase increases the value in the count field by the number of character positions in the inspected item.

ALL
When ALL is specified and neither the BEFORE nor AFTER phrase is specified, the count field (*identifier-2*) is increased by 1 for each nonoverlapping occurrence of the tallying comparand (*identifier-3* or *literal-1*) in the inspected item (*identifier-1*), beginning at the leftmost character position and continuing to the rightmost.

LEADING
When LEADING is specified and neither the BEFORE nor AFTER phrase is specified, the count field (*identifier-2*) is increased by 1 for each contiguous nonoverlapping occurrence of the tallying comparand in the inspected item (*identifier-1*), provided that the leftmost such occurrence is at the point where comparison began in the first comparison cycle for which the tallying comparand is eligible to participate.

FIRST (format 3 only)
When FIRST is specified and neither the BEFORE nor AFTER phrase is specified, the substitution field replaces the leftmost occurrence of the subject field in the inspected item (*identifier-1*).

TALLYING phrase example

```
WORKING-STORAGE SECTION.
77 CNTR PIC 9(3) COMP.
77 CHARS PIC X(18).
PROCEDURE DIVISION.
...........
     MOVE 'In order to form a' To CHARS
     MOVE 0 To CNTR
     INSPECT CHARS TALLYING CNTR FOR ALL SPACES
     DISPLAY 'Number of spaces = ' CNTR
```

The example output:

```
Number of spaces = 004
```

REPLACING phrase (formats 2 and 3)

This phrase fills all or portions of a data item with specified characters, such as spaces or zeros.

identifier-3* or *literal-1
Is the *subject field*, which identifies the characters to be replaced.

identifier-5* or *literal-3
Is the *substitution field* (the item that replaces the subject field).

The subject field and the substitution field must be the same length.

CHARACTERS BY
When the CHARACTERS BY phrase is used, the substitution field must be one character position in length.

When CHARACTERS BY is specified and neither the BEFORE nor AFTER phrase is specified, the substitution field replaces each character in the inspected item (*identifier-1*), beginning at the leftmost character position and continuing to the rightmost.

ALL
When ALL is specified and neither the BEFORE nor AFTER phrase is specified, the substitution field replaces each nonoverlapping occurrence of the subject field in the inspected item (*identifier-1*), beginning at the leftmost character position and continuing to the rightmost.

LEADING
When LEADING is specified and neither the BEFORE nor AFTER phrase is specified, the substitution field replaces each contiguous nonoverlapping occurrence of the subject field in the inspected item (*identifier-1*), provided that the leftmost such occurrence is at the point where comparison began in the first comparison cycle for which this substitution field is eligible to participate.

FIRST
When FIRST is specified and neither the BEFORE nor AFTER phrase is specified, the substitution field replaces the leftmost occurrence of the subject field in the inspected item (*identifier-1*).

When both the TALLYING and REPLACING phrases are specified (format 3), the INSPECT statement is executed as if an INSPECT TALLYING statement (format 1) were specified, immediately followed by an INSPECT REPLACING statement (format 2).

The following replacement rules apply:

- When the subject field is a figurative constant, the one-character substitution field replaces each character in the inspected item that is equivalent to the figurative constant.
- When the substitution field is a figurative constant, the substitution field replaces each nonoverlapping occurrence of the subject field in the inspected item.
- When the subject and substitution fields are character-strings, the character-string specified in the substitution field replaces each nonoverlapping occurrence of the subject field in the inspected item.
- After replacement has occurred in a given character position in the inspected item, no further replacement for that character position is made in this execution of the INSPECT statement.

REPLACING phrase example

```
WORKING-STORAGE SECTION.
77 CNTR PIC 9(3) COMP.
77 CHARS PIC X(18).
PROCEDURE DIVISION.
  . . .
      MOVE 'more,perfect,union' To CHARS
      MOVE 0 To CNTR

      INSPECT CHARS TALLYING CNTR FOR ALL ','
        REPLACING ALL ',' BY SPACES

      DISPLAY 'Number of commas replaced = ' CNTR
      DISPLAY 'CHARS is now = ' CHARS
```

The example result:

```
Number of commas replaced = 002
CHARS is now = more perfect union
```

BEFORE and AFTER phrases (all formats)

This phrase narrows the set of items being tallied or replaced.

No more than one BEFORE phrase and one AFTER phrase can be specified for any one ALL, LEADING, CHARACTERS, FIRST or CONVERTING phrase.

identifier-4* or *literal-2
Is the *delimiter*.

Delimiters are not counted or replaced.

INITIAL
The first occurrence of a specified item.

The BEFORE and AFTER phrases change how counting and replacing are done:

- When BEFORE is specified, counting or replacing of the inspected item (*identifier-1*) begins at the leftmost character position and continues until the first occurrence of the delimiter is encountered. If no delimiter is present in the inspected item, counting or replacing continues toward the rightmost character position.
- When AFTER is specified, counting or replacing of the inspected item (*identifier-1*) begins with the first character position to the right of the delimiter and continues toward the rightmost character position in the inspected item. If no delimiter is present in the inspected item, no counting or replacement takes place.

BEFORE and AFTER phrases example

```
WORKING-STORAGE SECTION.
77 CNTR1 PIC 9(3) COMP.
77 CNTR2 PIC 9(3) COMP.
77 CNTR3 PIC 9(3) COMP.
77 CHARS PIC X(50).

PROCEDURE DIVISION.

     MOVE '$some.confusing_text with.hyphens-periods.spaces'
         To CHARS
     MOVE 0 To CNTR1 CNTR2 CNTR3
     INSPECT CHARS
        TALLYING CNTR1 FOR CHARACTERS AFTER '$' BEFORE '_'
                 CNTR2 FOR ALL '.' AFTER  'h'
                 CNTR3 FOR ALL '.' BEFORE INITIAL 'a'
        REPLACING ALL '.' BY SPACES BEFORE 'h'
                   ALL '"' BY SPACES AFTER  's'
                   ALL '_' BY SPACES
     DISPLAY 'Number of characters after $ and before _  =' CNTR1
     DISPLAY 'Number of periods after h =' CNTR2
     DISPLAY 'Number of periods before initial a =' CNTR3
     DISPLAY 'CHARS is now = ' CHARS
```

The example result:

Note: For each BEFORE and AFTER phrase, the scanning continues after the previous phrase is done rather than starting at the beginning of CHARS.

```
Number of characters after $ and before _  =014
Number of periods after h =002
Number of periods before initial a =000
CHARS is now = $some confusing text with.hyphens-periods.spaces
```

CONVERTING phrase (format 4)

This phrase converts all occurrences of a specific character or string of characters in a data item (*identifier-1*) to user-supplied replacement characters.

identifier-6* or *literal-4
Specifies the character string to be *replaced*.

The same character must not appear more than once in either *literal-4* or *identifier-6*.

identifier-7* or *literal-5
Specifies the *replacing* character string.

The replacing character string (*identifier-7* or *literal-5*) must be the same size as the replaced character string (*identifier-6* or *literal-4*).

A format-4 INSPECT statement is interpreted and executed as if a format-2 INSPECT statement had been written with a series of ALL phrases (one for each character of *literal-4*), specifying the same *identifier-1*. The effect is as if each single character of *literal-4* were referenced as *literal-1*, and the corresponding single character of *literal-5* referenced as *literal-3*. Correspondence between the characters of *literal-4* and the characters of *literal-5* is by ordinal position within the data item.

If *identifier-4*, *identifier-6*, or *identifier-7* occupies the same storage area as *identifier-1*, the result of the execution of this statement is undefined, even if they are defined by the same data description entry.

The following table describes the treatment of data items that can be used as an operand in the INSPECT statement:

Table 48. ***Treatment of the content of data items***

When referenced by any identifier except *identifier-2*, the content of each item of category ...	**Is treated ...**
Alphanumeric or alphabetic	As an alphanumeric character string
DBCS	As a DBCS character string
National	As a national character string
Alphanumeric-edited, numeric-edited with usage DISPLAY, or numeric with usage DISPLAY (unsigned, external decimal)	As if redefined as category alphanumeric, with the INSPECT statement referring to an alphanumeric character string
National-edited, numeric-edited with usage NATIONAL or numeric with usage NATIONAL (unsigned, external decimal)	As if redefined as category national, with the INSPECT statement referring to a national character string
Numeric with usage DISPLAY (signed, external decimal)	As if moved to an unsigned external decimal item of usage DISPLAY with the same length as the identifier and then redefined as category alphanumeric, with the INSPECT statement referring to an alphanumeric character string If the sign is a separate character, the byte containing the sign is not examined and, therefore, not replaced. If the referenced item is *identifier-1*, the string that results from any replacing or converting action is copied back to *identifier-1*.
Numeric with usage NATIONAL (signed, external decimal)	As if moved to an unsigned external decimal item of usage NATIONAL with the same length as the identifier and then redefined as category national, with the INSPECT statement referring to a national character string If the sign is a separate character, the byte containing the sign is not examined and, therefore, not replaced. If the referenced item is *identifier-1*, the string that results from any replacing or converting action is copied back to *identifier-1*.
External floating-point with usage DISPLAY	As if redefined as category alphanumeric, with the INSPECT statement referring to an alphanumeric character-string
External floating-point with usage NATIONAL	As if redefined as category national, with the INSPECT statement referring to a national character-string

CONVERTING phrase example

The following example shows the use of INSPECT CONVERTING with AFTER and BEFORE phrases to examine and replace characters in data item DATA-4. All characters that follow the first instance of the character / but that precede the first instance of the character ? (if any) are translated from lowercase to uppercase.

```
01  DATA-4            PIC X(11).
. . .
    INSPECT DATA-4
      CONVERTING
         "abcdefghijklmnopqrstuvwxyz" TO
         "ABCDEFGHIJKLMNOPQRSTUVWXYZ"
      AFTER INITIAL "/"
      BEFORE INITIAL "?"
```

Table 49. CONVERTING example result

DATA-4 before converting	DATA-4 after converting
a/five/?six	a/FIVE/?six
r/Rexx/RRRr	r/REXX/RRRR
zfour?inspe	zfour?inspe

Data flow

Except when the BEFORE or AFTER phrase is specified, inspection begins at the leftmost character position of the inspected item (*identifier-1*) and proceeds character-by-character to the rightmost position.

The comparands of the following phrases are compared in the left-to-right order in which they are specified in the INSPECT statement:

- TALLYING (*literal-1* or *identifier-3*, ...)
- REPLACING (*literal-3* or *identifier-5*, ...)

If any identifier is subscripted or reference modified, or is a function-identifier, the subscript, reference-modifier, or function is evaluated only once as the first operation in the execution of the INSPECT statement.

For examples of TALLYING and REPLACING, see *Tallying and replacing data items (INSPECT)* in the *COBOL for Linux on x86 Programming Guide*.

Comparison cycle

The comparison cycle consists of the actions as described in this topic.

1. The first comparand is compared with an equal number of leftmost contiguous character positions in the inspected item. The comparand matches the inspected characters only if both are equal, character-for-character.

   If the CHARACTERS phrase is specified, an implied one-character comparand is used. The implied character is always considered to match the inspected character in the inspected item.
2. If no match occurs for the first comparand and there are more comparands, the comparison is repeated for each successive comparand until either a match is found or all comparands have been acted upon.
3. Depending on whether a match is found, these actions are taken:
   - If a match is found, tallying or replacing takes place as described in the TALLYING and REPLACING phrase descriptions.

     If there are more character positions in the inspected item, the first character position following the rightmost matching character is now considered to be in the leftmost character position. The process described in actions 1 and 2 is then repeated.

- If no match is found and there are more character positions in the inspected item, the first character position following the leftmost inspected character is now considered to be in the leftmost character position. The process described in actions 1 and 2 is then repeated.

4. Actions 1 through 3 are repeated until the rightmost character position in the inspected item either has been matched or has been considered as being in the leftmost character position.

When the BEFORE or AFTER phrase is specified, the comparison cycle is modified, as described in "BEFORE and AFTER phrases (all formats)" on page 320.

Example of the INSPECT statement

The topic shows an example of INSPECT statement results.

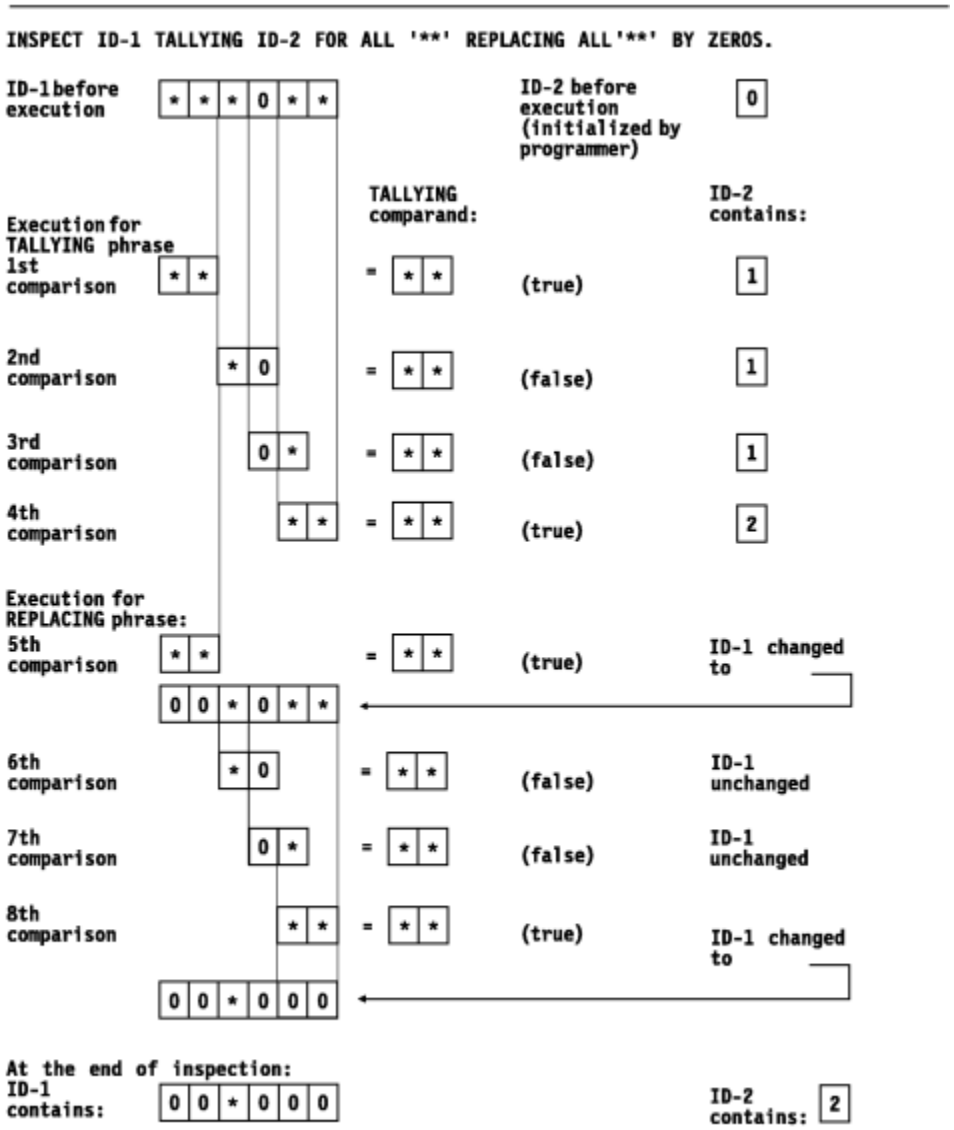

MERGE statement

The MERGE statement combines two or more identically sequenced files (that is, files that have already been sorted according to an identical set of ascending or descending keys) on one or more keys and makes records available in merged order to an output procedure or output file.

A MERGE statement can appear anywhere in the PROCEDURE DIVISION except in a declarative section.

Format

```
MERGE file-name-1 ──►
   ┌──────────────────────────────────────────────────────────────┐
   ►──┬──────────────────────────────────────────────────────────┬──►
      │                                                          │
      │                                                          │
      │                                                          │
```

- A specific key data item must be physically located in the same position and have the same data format in each input file. However, it need not have the same data-name.
- If *file-name-1* has more than one record description, the KEY data items need be described in only one of the record descriptions.
- If *file-name-1* contains variable-length records, all of the KEY data-items must be contained within the first *n* character positions of the record, where *n* equals the minimum records size specified for *file-name-1*.
- KEY data items must not contain an OCCURS clause or be subordinate to an item that contains an OCCURS clause.
- KEY data items cannot be:
  - Variably located
  - Group items that contain variable-occurrence data items
  - Windowed date fields
  - Category numeric described with usage NATIONAL (national decimal type)
  - Category external floating-point described with usage NATIONAL (national floating-point)
  - Category DBCS
- KEY data items can be qualified.
- KEY data items can be any of the following data categories:
  - Alphabetic, alphanumeric, alphanumeric-edited
  - Numeric (except numeric with usage NATIONAL)
  - Numeric-edited (with usage DISPLAY or NATIONAL)
  - Internal floating-point or display floating-point
  - National or national-edited when the NCOLLSEQ(BINARY) compiler option is in effect. Binary collating sequence is applied to national keys.

If *file-name-4* references an indexed file whose prime record key is not a *record-key-name*, the first specification of *data-name-1* must be associated with an ASCENDING phrase and the data item referenced by that *data-name-1* must occupy the same character positions in this record as the data item associated with the prime record key for that file.

If *file-name-4* references an indexed file whose prime record key is a *record-key-name*, you must specify a corresponding *data-name-1* for each data name in the SOURCE phrase of the*record-key-name*. Each *data-name-1* must be associated with an ASCENDING phrase, and each *data-name-1* must occupy the same character positions as the corresponding data name in the SOURCE phrase.

For more information about *record-key-name*, see "FILE-CONTROL paragraph" on page 107.

The direction of the merge operation depends on the specification of the ASCENDING or DESCENDING keywords as follows:

- When ASCENDING is specified, the sequence is from the lowest key value to the highest key value.
- When DESCENDING is specified, the sequence is from the highest key value to the lowest key value.

If the KEY data item is alphabetic, alphanumeric, alphanumeric-edited, or numeric-edited, the sequence of key values depends on the collating sequence used (see "COLLATING SEQUENCE phrase" on page 327 below).

If the KEY data item is described with usage NATIONAL, the sequence of the KEY values is based on the binary values of the national characters.

If the KEY is an external floating-point item with usage DISPLAY, the key is treated as category alphanumeric. The sequence in which the records are merged depends on the collating sequence used.

If the KEY is an external floating-point item with usage NATIONAL, the key is treated as category national.

If the KEY is an internal floating-point item, the sequence of key values is numeric order.

When the COLLATING SEQUENCE phrase is not specified, the key comparisons are performed according to the rules for comparison of operands in a relation condition. For details, see "General relation conditions" on page 244.

When the COLLATING SEQUENCE phrase is specified, the indicated collating sequence is used for key data items of alphabetic, alphanumeric, alphanumeric-edited, external floating-point, and numeric-edited categories. For all other key data items, the comparisons are performed according to the rules for comparison of operands in a relation condition.

COLLATING SEQUENCE phrase

This phrase specifies the collating sequence to be used in alphanumeric comparisons for the KEY data items in this merge operation.

The COLLATING SEQUENCE phrase has no effect for keys that are not alphabetic or alphanumeric.

The COLLATING SEQUENCE phrase is valid only when a single-byte ASCII code page is in effect.

alphabet-name-1
Must be specified in the ALPHABET clause of the SPECIAL-NAMES paragraph. Any one of the alphabet-name clause phrases can be specified, with the following results:

STANDARD-1
The collating sequence is based on the character's hex value order.

STANDARD-2
The collating sequence is based on the character's hex value order.

NATIVE
The collating sequence indicated by the runtime locale is selected.

EBCDIC
The EBCDIC collating sequence is used for all alphanumeric comparisons. (The EBCDIC collating sequence is shown in "EBCDIC collating sequence" on page 611.)

literal
The collating sequence established by the specification of literals in the ALPHABET-NAME clause is used for all alphanumeric comparisons.

When the COLLATING SEQUENCE phrase is omitted, the PROGRAM COLLATING SEQUENCE clause (if specified) in the OBJECT-COMPUTER paragraph identifies the collating sequence to be used. When both the COLLATING SEQUENCE phrase of the MERGE statement and the PROGRAM COLLATING SEQUENCE clause of the OBJECT-COMPUTER paragraph are omitted, the COLLSEQ compiler option indicates the collating sequence used. If COLLSEQ(EBCDIC) is specified, the EBCDIC collating sequence is used. If COLLSEQ(LOCALE) is specified, the collating sequence as indicated by the locale is used. For more information about locales, see "Locale considerations" on page 635.

USING phrase

file-name-2 , file-name-3 , ...
Specifies the input files.

During the MERGE operation, all the records on *file-name-2*, *file-name-3*, ... (that is, the input files) are transferred to *file-name-1*. At the time the MERGE statement is executed, these files must not be open. The input files are automatically opened, read, and closed. If DECLARATIVE procedures are specified for these files for input operations, the declaratives will be driven for errors if errors occur.

All input files must specify sequential or dynamic access mode and be described in FD entries in the DATA DIVISION.

If *file-name-1* contains variable-length records, the size of the records contained in the input files (*file-name-2*, *file-name-3*, ...) must be neither less than the smallest record nor greater than the largest record described for *file-name-1*. If *file-name-1* contains fixed-length records, the size of the records contained in the input files must not be greater than the largest record described for *file-name-1*. For more information, see *Sorting and merging files* in the *COBOL for Linux on x86 Programming Guide*.

GIVING phrase

***file-name-4* , ...**
Specifies the output files.

When the GIVING phrase is specified, all the merged records in *file-name-1* are automatically transferred to the output files (*file-name-4*, ...).

All output files must specify sequential or dynamic access mode and be described in FD entries in the DATA DIVISION.

If the output files (*file-name-4*, ...) contain variable-length records, the size of the records contained in *file-name-1* must be neither less than the smallest record nor greater than the largest record described for the output files. If the output files contain fixed-length records, the size of the records contained in *file-name-1* must not be greater than the largest record described for the output files. For more information, see *Sorting and merging files* in the *COBOL for Linux on x86 Programming Guide*.

At the time the MERGE statement is executed, the output files (*file-name-4*, ...) must not be open. The output files are automatically opened, written to, and closed. If DECLARATIVE procedures are specified for these files for output operations, the declaratives will be driven for errors if errors occur.

OUTPUT PROCEDURE phrase

This phrase specifies the name of a procedure that is to select or modify output records from the merge operation.

procedure-name-1
Specifies the first (or only) section or paragraph in the OUTPUT PROCEDURE.

procedure-name-2
Identifies the last section or paragraph of the OUTPUT PROCEDURE.

The OUTPUT PROCEDURE can consist of any procedure needed to select, modify, or copy the records that are made available one at time by the RETURN statement in merged order from the file referenced by *file-name-1*. The range includes all statements that are executed as the result of a transfer of control by CALL, EXIT, GO TO, PERFORM, and XML PARSE statements in the range of the output procedure. The range also includes all statements in declarative procedures that are executed as a result of the execution of statements in the range of the output procedure. The range of the output procedure must not cause the execution of any MERGE, RELEASE, or SORT statement.

If an output procedure is specified, control passes to it after the file referenced by *file-name-1* has been sequenced by the MERGE statement. The compiler inserts a return mechanism at the end of the last statement in the output procedure and when control passes the last statement in the output procedure, the return mechanism provides the termination of the merge and then passes control to the next executable statement after the MERGE statement. Before entering the output procedure, the merge procedure reaches a point at which it can select the next record in merged order when requested. The RETURN statements in the output procedure are the requests for the next record.

The OUTPUT PROCEDURE phrase is similar to a basic PERFORM statement. For example, if you name a procedure in an OUTPUT PROCEDURE, that procedure is executed during the merging operation just as if it were named in a PERFORM statement. As with the PERFORM statement, execution of the procedure is terminated after the last statement completes execution. The last statement in an OUTPUT PROCEDURE can be the EXIT statement (see “EXIT statement” on page 307).

MERGE special registers

The topic describes special registers of the MERGE statement.

SORT-CONTROL special register
You identify the sort control file (through which you can specify additional options to the sort/merge function) with the SORT-CONTROL special register.

If you use a sort control file to specify control statements, the values specified in the sort control file take precedence over those in the other SORT special registers.

For information, see "SORT-CONTROL" on page 23.

SORT-MESSAGE special register
For information, see "SORT-MESSAGE" on page 24. The special register SORT-MESSAGE is equivalent to an option control statement keyword in the sort control file.

SORT-RETURN special register
For information, see "SORT-RETURN" on page 24.

MOVE statement

The MOVE statement transfers data from one area of storage to one or more other areas.

Format 1: MOVE statement

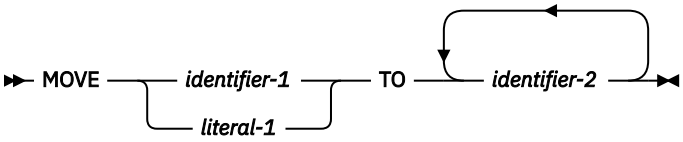

Format 2: MOVE statement with CORRESPONDING phrase

CORR is an abbreviation for, and is equivalent to, CORRESPONDING.

identifier-1* , *literal-1
The sending area.

identifier-2
The receiving areas. *identifier-2* must not reference an intrinsic function.

When format 1 is specified:

- When one of *identifier-1* or *identifier-2* references a national group item and the other operand references an alphanumeric group item, the national group is processed as a group item; in all other cases, the national group item is processed as an elementary data item of category national.
- The data in the sending area is moved into the data item referenced by each *identifier-2* in the order in which the *identifier-2* data items are specified in the MOVE statement. See "Elementary moves" on page 330 and "Group moves" on page 335 below.

When format 2 is specified:

- Both identifiers must be group items.
- A national group item is processed as a group item (and not as an elementary data item of category national).

- Selected items in *identifier-1* are moved to *identifier-2* according to the rules for the "CORRESPONDING phrase" on page 267. The results are the same as if each pair of CORRESPONDING identifiers were referenced in a separate MOVE statement.

Data items described with the following types of usage cannot be specified in a MOVE statement:

- INDEX
- POINTER
- FUNCTION-POINTER
- PROCEDURE-POINTER

A data item defined with a usage of INDEX, POINTER, FUNCTION-POINTER, or PROCEDURE-POINTER can be part of an alphanumeric group item that is referenced in a MOVE CORRESPONDING statement; however, no movement of data from those data items takes place.

The evaluation of the length of the sending or receiving area can be affected by the DEPENDING ON phrase of the OCCURS clause (see "OCCURS clause" on page 177).

If the sending field (*identifier-1*) is reference-modified or subscripted, or is an alphanumeric, numeric, integer, or national function-identifier, the reference-modifier, subscript, or function is evaluated only once, immediately before data is moved to the first of the receiving operands.

Any length evaluation, subscripting, or reference-modification associated with a receiving field (*identifier-2*) is evaluated immediately before the data is moved into that receiving field.

For example, the result of the statement:

```
MOVE A(B) TO B, C(B).
```

is equivalent to:

```
MOVE A(B) TO TEMP.
MOVE TEMP TO B.
MOVE TEMP TO C(B).
```

where TEMP is defined as an intermediate result item. The subscript B has changed in value between the time that the first move took place and the time that the final move to `C(B)` is executed.

For further information about intermediate results, see *Appendix A. Intermediate results and arithmetic precision* in the *COBOL for Linux on x86 Programming Guide*.

After execution of a MOVE statement, the sending fields contain the same data as before execution.

Usage note: Overlapping operands in a MOVE statement can cause unpredictable results.

Elementary moves

An elementary move is one in which the receiving item is an elementary data item and the sending item is an elementary data item or a literal.

Valid operands belong to one of the following categories:

- **Alphabetic**: includes data items of category alphabetic and the figurative constant SPACE
- **Alphanumeric**: includes the following items:
  - Data items of category alphanumeric
  - Alphanumeric functions
  - Alphanumeric literals
  - The figurative constant ALL *alphanumeric-literal* and all other figurative constants (except NULL) when used in a context that requires an alphanumeric sending item
- **Alphanumeric-edited**: includes data items of category alphanumeric-edited

- **Boolean**: includes Boolean data items and Boolean literals.
- **Date-Time**: includes date, time, and timestamp data items of class date-time. Date-time data items are defined as USAGE DISPLAY or PACKED-DECIMAL.
- **DBCS**: includes data items of category DBCS, DBCS literals, and the figurative constant ALL DBCS-literal.
- **External floating-point**: includes data items of category external floating point (described with USAGE DISPLAY or USAGE NATIONAL) and floating-point literals.
- **Internal floating-point**: includes data items of category internal floating-point (defined as USAGE COMP-1 or USAGE COMP-2)
- **National**: includes the following items:
  - National group items (treated as elementary item of category national)
  - Data items of category national
  - National literals
  - National functions
  - Figurative constants ZERO, SPACE, QUOTE, and ALL *national-literal* when used in a context that requires a national sending item
- **National-edited**: includes data items of category national-edited
- **Numeric**: includes the following items:
  - Data items of category numeric
  - Numeric literals
  - The figurative constant ZERO (when ZERO is moved to a numeric or numeric-edited item).
- **Numeric-edited**: includes data items of category numeric-edited.

Elementary move rules

Any necessary conversion of data from one form of internal representation to another takes place during the move, along with any specified editing in, or de-editing implied by, the receiving item. The code page used for conversion to or from alphanumeric characters is the code page applicable to the specific data item at run time.

The following rules outline the execution of valid elementary moves. When the receiving field is:

Alphabetic:

- Alignment and any necessary space filling or truncation occur as described under "Alignment rules" on page 146.
- If the size of the sending item is greater than the size of the receiving item, excess characters on the right are truncated after the receiving item is filled.

Alphanumeric or **alphanumeric-edited**:

- If the sending item is a national decimal integer item, the sending data is converted to usage DISPLAY and treated as though it were moved to a temporary data item of category alphanumeric with the same number of character positions as the sending item. The resulting alphanumeric data item is treated as the sending item.
- Alignment and any necessary space filling or truncation take place, as described under "Alignment rules" on page 146.
- If the size of the sending item is greater than the size of the receiving item, excess characters on the right are truncated after the receiving item is filled.
- If the initial sending item has an operational sign, the unsigned value is used. If the operational sign occupies a separate character, that character is not moved, and the size of the sending item is considered to be one less character than the actual size.

- If the sending item is boolean, the data is moved as if the sending item were described as an alphanumeric item of length 1.
- If the sending item is date-time, the date-time item is treated like an alphanumeric item, and moved to the receiver following the rules for an alphanumeric to alphanumeric move. If the sending date-time item has a USAGE of PACKED-DECIMAL, it is first converted to a USAGE of DISPLAY.

Boolean:

- For a Boolean receiving item, only the first byte of the sending item is moved.
- If the sending item is alphanumeric, the first character of the sending item is moved. The characters "0" and "1" are equivalent to the Boolean values B"0" and B"1", respectively.
- If the sending item is ZERO, it is treated as the Boolean literal B"0".

DBCS:

- If the sending and receiving items are not the same size, the sending data is either truncated on the right or padded with DBCS spaces on the right. If the padding required is not in a multiple consistent with double-byte characters, single-byte characters are used (for example, a DBCS data item moved to an alphanumeric group item).

Date-Time:

- If the sending item is date-time, then the format of the sending date-time item is first converted to the receiver's format, and then moved. If the sending item is a timestamp, and the receiving item is a date or time item, then only the date or time portion of the timestamp item is moved to the receiving item. If the sending item is a date or time item and the receiving item is a timestamp, only the date or time portion of the timestamp is replaced.
- If the sending item is numeric, each of the receiving items numeric conversion specifiers are replaced with the digits from the sending item, beginning at the rightmost conversion specifier, and at the rightmost digit of that conversion specifier. All alphanumeric conversion specifiers take on default values.
- If the sending item is numeric-edited, the numeric-edited item is de-edited. The resulting numeric value is then moved to the date-time item.
- If the sending item is alphanumeric or alphanumeric-edited, the receiving date-time item is treated as an alphanumeric item, and the move takes place according to the rules for an alphanumeric to alphanumeric move.

External floating-point:

- For a floating-point sending item, the floating-point value is converted to the usage of the receiving external floating-point item (if different from the sending item's representation).
- For other sending items, the numeric value is treated as though that value were converted to internal floating-point and then converted to the usage of the receiving external floating-point item.

Internal floating-point:

- When the category of the sending operand is not internal floating-point, the numeric value of the sending item is converted to internal floating-point format.

National or **national-edited**:

- If the representation of the sending item is not national characters, the sending data is converted to national characters and treated as though it were moved to a temporary data item of category national of a length not to cause truncation or padding. The resulting category national data item is treated as the sending data item.
- If the representation of the sending item is national characters, the sending data is used without conversion.
- Alignment and any necessary space filling or truncation take place as described under “Alignment rules” on page 146. The programmer is responsible for ensuring that multiple encoding units that together form a graphic character are not split by truncation.

- If the sending item has an operational sign, the unsigned value is used. If the operational sign occupies a separate character, that character is not moved, and the size of the sending item is considered to be one less character than the actual size.

Numeric or **numeric-edited**:

- Except when zeros are replaced because of editing requirements, alignment by decimal point and any necessary zero filling take place, as described under "Alignment rules" on page 146.
- If the receiving item is signed, the sign of the sending item is placed in the receiving item, with any necessary sign conversion. If the sending item is unsigned, a positive operational sign is generated for the receiving item.
- If the receiving item is unsigned, no operational sign is generated for the receiving item and the absolute value of the sending item is used in the move.
- When the category of the sending item is alphanumeric, alphanumeric-edited, national, or national-edited, the data is moved as if the sending item were described as an unsigned integer.
- When the sending item is floating-point, the data is first converted to either a binary or internal decimal representation and is then moved.
- When the receiving item is numeric-edited, editing takes place as defined by the picture character string or BLANK WHEN ZERO clause associated with the receiving item.
- When the sending item is numeric-edited, the compiler de-edits the sending data to establish the unedited value of the numeric-edited item (this value can be signed). The unedited numeric value is used in the move to the receiving numeric or numeric-edited data item.

Usage notes:

1. If the receiving item is of category alphanumeric, alphanumeric-edited, numeric-edited, national, or national-edited and the sending field is numeric, any digit positions described with picture symbol P in the sending item are considered to have the value zero. Each P is counted in the size of the sending item.
2. If the receiving item is numeric and the sending field is an alphanumeric literal, a national literal, or an ALL literal, all characters of the literal must be numeric characters.

Valid and invalid elementary moves

The table shows valid and invalid elementary moves for each category.

In the table:

- YES = Move is valid.
- NO = Move is invalid.
- Column headings indicate receiving item categories; row headings indicate sending item categories.

Table 50. ***Valid and invalid elementary moves***

Sending Item Category	Receiving Item Category												
	Alpha-betic	**Alpha-numeric**	**Alpha-numeric edited**	**Boolean**	**Date**	**Time**	**Time-stamp**	**Numeric**	**Numeric-edited**	**External floating-point**	**Internal floating-point**	**DBCS[1]**	**National, national-edited**
Alphabetic and SPACE	Yes	Yes	Yes	NO	NO	NO	NO	No	No	No	No	No	Yes
Alphanumeric[2]	Yes	Yes	Yes	YES[10]	YES	YES	YES	Yes[3]	Yes[3]	Yes[8]	Yes[8]	No	Yes
Alphanumeric-edited	Yes	Yes	Yes	NO	YES	YES	YES	No	No	No	No	No	Yes
Boolean[11]	NO	YES	YES	YES	NO	NO	NO	NO	NO	NO	NO	NO	NO
Date	NO	YES	YES	NO	YES	NO	YES	YES	YES	NO	NO	NO	NO
Time	NO	YES	YES	NO	NO	YES	YES	YES	YES	NO	NO	NO	NO
Timestamp	NO	YES	YES	NO	YES	YES	YES	YES	YES	NO	NO	NO	NO
Numeric integer[4]	No	Yes	Yes	NO	YES	YES	YES	Yes	Yes	Yes	Yes	No	Yes

Table 50. ***Valid and invalid elementary moves*** *(continued)*

Sending Item Category	Receiving Item Category												
	Alpha-betic	**Alpha-numeric**	**Alpha-numeric edited**	**Boolean**	**Date**	**Time**	**Time-stamp**	**Numeric**	**Numeric - edited**	**External floating-point**	**Internal floating-point**	**DBCS 1**	**National, national-edited**
ZERO[4]	No	Yes	Yes	YES	NO	NO	NO	Yes	Yes	Yes	Yes	No	Yes
Numeric noninteger[5]	No	No	No	NO	NO	NO	NO	Yes	Yes	Yes	Yes	No	No
Numeric-edited	No	Yes	Yes	NO	YES	YES	YES	Yes	Yes	Yes	Yes	No	Yes
Floating-point[6]	No	No	No	NO	NO	NO	NO	Yes	Yes	Yes	Yes	No	No
DBCS[7]	No	No	No	NO	NO	NO	NO	No	No	No	No	Yes	Yes
National[9]	No	No	No	NO	NO	NO	NO	Yes	Yes	Yes	Yes	No	Yes
National-edited	No	No	No	NO	NO	NO	NO	No	No	No	No	No	Yes

1. Includes DBCS data items.
2. Includes alphanumeric literals.
3. Figurative constants and alphanumeric literals must consist only of numeric characters and will be treated as numeric integer fields.
4. Includes integer numeric literals.
5. Includes noninteger numeric literals.
6. Includes floating-point literals, external floating-point data items (USAGE DISPLAY or USAGE NATIONAL), and internal floating-point data items (USAGE COMP-1 or USAGE COMP-2).
7. Includes DBCS data-items, DBCS literals, and figurative constant SPACE.
8. Figurative constants and alphanumeric literals must consist only of numeric characters and will be treated as numeric integer fields. The ALL literal cannot be used as a sending item.
9. Includes national data items, national literals, national functions, and figurative constants ZERO, SPACE, QUOTE, and ALL national literal.
10. First character of sending item is moved, regardless of its value
11. Includes boolean literals

Moves involving date fields

If the sending item is specified as a year-last date field, then all receiving fields must also be year-last date fields with the same date format as the sending item. If a year-last date field is specified as a receiving item, then the sending item must be either a nondate or a year-last date field with the same date format as the receiving item. In both cases, the move is then performed as if all items were nondates.

Table 51 on page 334 describes the behavior of moves involving non-year-last date fields. If the sending item is a date field, then the receiving item must be a compatible date field. If the sending and receiving items are both date fields, then they must be compatible; that is, they must have the same date format, except for the year part, which can be windowed or expanded.

This table uses the following terms to describe the moves:

Normal
The move is performed with no date-sensitive behavior, as if the sending and receiving items were both nondates.

Expanded
The windowed date field sending item is treated as if it were first converted to expanded form, as described under "Semantics of windowed date fields" on page 166.

Invalid
The move is not allowed.

Table 51. ***Moves involving date fields***

	Nondate receiving item	**Windowed date field receiving item**	**Expanded date field receiving item**
Nondate sending item	Normal	Normal	Normal

*Table 51. **Moves involving date fields** (continued)*			
	Nondate receiving item	**Windowed date field receiving item**	**Expanded date field receiving item**
Windowed date field sending item	Invalid	Normal	Expanded
Expanded date field sending item	Invalid	Normal[1]	Normal

1. A move from an expanded date field to a windowed date field is, in effect, a "windowed" move, because it truncates the century component of the expanded date field. If the move is alphanumeric, it treats the receiving windowed date field as if its data description specified JUSTIFIED RIGHT. This is true even if the receiving windowed date field is a group item, for which the JUSTIFIED clause cannot be specified.

Moves involving file record areas

The successful execution of an OPEN statement for a given file makes the record area for that file available. You can move data to or from the record description entries associated with a file only when the file is in the open status.

Execution of an implicit or explicit CLOSE statement removes a file from open status and makes the record area unavailable.

Group moves

A group move can be any move in which an alphanumeric group item is a sending item or a receiving item, or both.

The group moves are:

- A move to an alphanumeric group item from one of the following items:
  - any elementary data item that is valid as a sending item in the MOVE statement
  - a national group item
  - a literal
  - a figurative constant
- A move from an alphanumeric group item to the following items:
  - any elementary data item that is valid as a receiving item in the MOVE statement
  - a national group item
  - an alphanumeric group item

A group move is treated as though it were an alphanumeric-to-alphanumeric elementary move, except that there is no conversion of data from one form of internal representation to another. In a group move, the receiving area is filled without consideration for the individual elementary items contained within either the sending area or the receiving area, except as noted in the OCCURS clause. (See “OCCURS clause” on page 177.)

MULTIPLY statement

The MULTIPLY statement multiplies numeric items and sets the values of data items equal to the results.

Format 1: MULTIPLY statement

```
►► MULTIPLY ─┬─ identifier-1 ─┬─ BY ─┬─ identifier-2 ─┬─►
             └─ literal-1 ────┘      │                │
                                     └◄───────────────┘
                                                      └─ ROUNDED ─┘

►┬──────────────────────────────────────────────────────────────►
 │ ┌──────────────────────────────────────────────────────────┐
 │ │ ┌──────────────────────────────────────────────────────┐ │
 │ │ │ ┌──────────────────────────────────────────────────┐ │ │
 │ │ │ │ ┌──────────────────────────────────────────────┐ │ │ │
 │ │ │ │ │ ┌──────────────────────────────────────────┐ │ │ │ │
 │ │ │ │ │ │ ┌──────────────────────────────────────┐ │ │ │ │ │
 │ │ │ │ │ │ │ ┌──────────────────────────────────┐ │ │ │ │ │ │
 │ │ │ │ │ │ │ │ ┌──────────────────────────────┐ │ │ │ │ │ │ │
 │ │ │ │ │ │ │ │ │ ┌──────────────────────────┐ │ │ │ │ │ │ │ │
 │ │ │ │ │ │ │ │ │ │ ┌──────────────────────┐ │ │ │ │ │ │ │ │ │
 │ │ │ │ │ │ │ │ │ │ │ ┌──────────────────┐ │ │ │ │ │ │ │ │ │ │
 │ │ │ │ │ │ │ │ │ │ │ │ ┌──────────────┐ │ │ │ │ │ │ │ │ │ │ │
 │ │ │ │ │ │ │ │ │ │ │ │ │ ┌──────────┐ │ │ │ │ │ │ │ │ │ │ │ │
 │ │ │ │ │ │ │ │ │ │ │ │ │ │ ┌────────┐ │ │ │ │ │ │ │ │ │ │ │ │
 │ │ │ │ │ │ │ │ │ │ │ │ │ │ │ │      │
```

literal-1* , *literal-2
Must be a numeric literal.

For format-2:

identifier-3
Must name an elementary numeric or numeric-edited item.

identifier-3, the GIVING phrase identifier, is the only identifier in the MULTIPLY statement that can be a date field.

If *identifier-3* names a date field, see "Storing arithmetic results that involve date fields" on page 239 for details on how the product is stored in *identifier-3*.

Floating-point data items and literals can be used anywhere a numeric data item or literal can be specified.

When the ARITH(COMPAT) compiler option is in effect, the composite of operands can contain a maximum of 30 digits. When the ARITH(EXTEND) or ARITH(FULL) compiler option is in effect, the composite of operands can contain a maximum of 31 digits. For more information, see "Arithmetic statement operands" on page 270 and the details on arithmetic intermediate results, *Appendix A. Intermediate results and arithmetic precision* in the *COBOL for Linux on x86 Programming Guide*.

ROUNDED phrase

For formats 1 and 2, see "ROUNDED phrase" on page 268.

SIZE ERROR phrases

For formats 1 and 2, see "SIZE ERROR phrases" on page 269.

END-MULTIPLY phrase

This explicit scope terminator serves to delimit the scope of the MULTIPLY statement. END-MULTIPLY permits a conditional MULTIPLY statement to be nested in another conditional statement. END-MULTIPLY can also be used with an imperative MULTIPLY statement.

For more information, see "Delimited scope statements" on page 266.

OPEN statement

The OPEN statement initiates the processing of files. It also checks or writes labels, or both.

Format 1: OPEN statement for sequential files

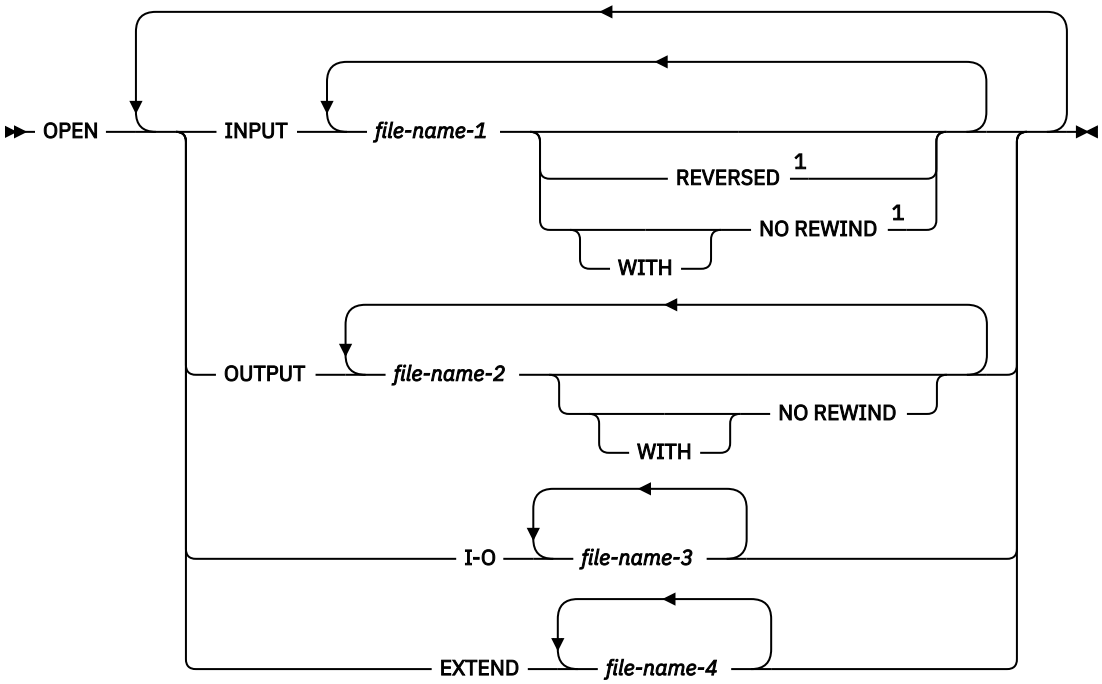

Notes:

[1] The REVERSED and WITH NO REWIND phrases are syntax checked, but have no effect on the execution of the program.

Format 2: OPEN statement for indexed and relative files

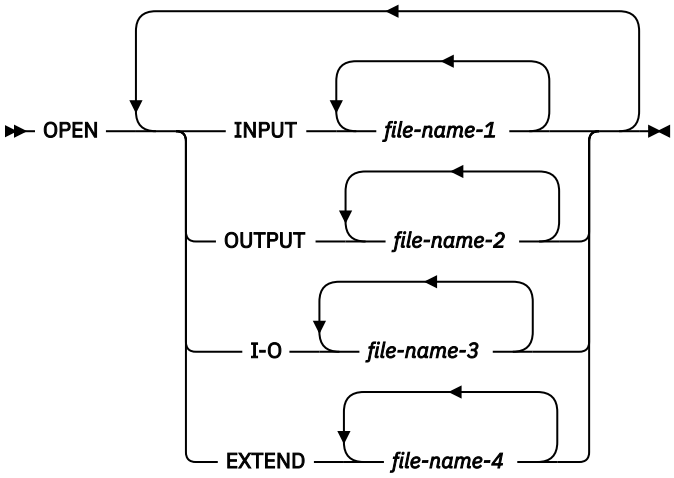

Format 3: OPEN statement for line-sequential files

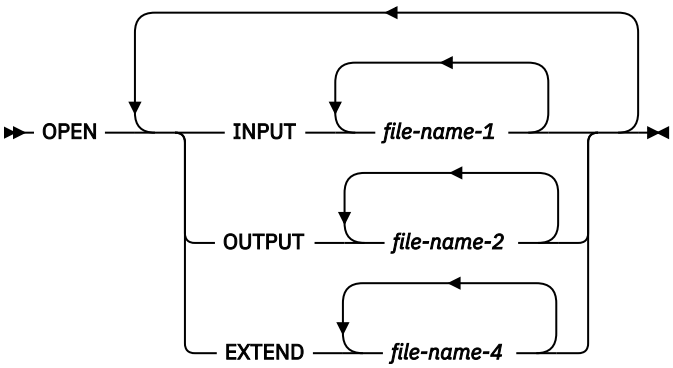

The phrases INPUT, OUTPUT, I-O, and EXTEND specify the mode to be used for opening the file. At least one of the phrases INPUT, OUTPUT, I-O, or EXTEND must be specified with the OPEN keyword. The INPUT, OUTPUT, I-O, and EXTEND phrases can appear in any order.

INPUT
Permits input operations.

OUTPUT
Permits output operations. This phrase can be specified when the file is being created.

Do not specify OUTPUT for files that contain records. The file will be replaced by new data.

I-O
Permits both input and output operations. The I-O phrase can be specified only for files assigned to direct access devices.

The I-O phrase is not valid for line-sequential files.

EXTEND
Permits output operations that append to or create a file.

The EXTEND phrase is allowed for sequential access files only if the new data is written in ascending sequence. The EXTEND phrase is allowed for files that specify the LINAGE clause.

file-name-1*, *file-name-2*, *file-name-3*, *file-name-4
Designate a file upon which the OPEN statement is to operate. If more than one file is specified, the files need not have the same organization or access mode. Each file-name must be defined in an FD entry in the DATA DIVISION and must not name a sort or merge file. The FD entry must be equivalent to the information supplied when the file was defined.

REVERSED
The REVERSED phrase is syntax checked, but has no effect on the execution of the program.

NO REWIND
The NO REWIND phrase is syntax checked, but has no effect on the execution of the program.

General rules

The topic shows general rules of the OPEN statement.

- If a file opened with the INPUT phrase is an optional file that is not available, the OPEN statement sets the file position indicator to indicate that an optional input file is not available.
- Execution of an OPEN INPUT or OPEN I-O statement sets the file position indicator:
  - For indexed files, to the characters with the lowest ordinal position in the collating sequence associated with the file.
  - For sequential and relative files, to 1.

- When the EXTEND phrase is specified, the OPEN statement positions the file immediately after the last record written in the file. (The record with the highest prime record key value for indexed files or relative key value for relative files is considered the last record.) Subsequent WRITE statements add records as if the file were opened OUTPUT. The EXTEND phrase can be specified when a file is being created; it can also be specified for a file that contains records, or that has contained records that have been deleted. For more information, see note 1 in the "OPEN statement notes" on page 340 and SELECT OPTIONAL in the "SELECT clause" on page 112.
- When the EXTEND phrase is not specified, the OPEN statement positions the file at its beginning.

If more than one file-name is specified in an OPEN statement, the result of executing this OPEN statement is the same as if a separate OPEN statement had been written for each file-name in the same order as specified in the OPEN statement. These separate OPEN statements would each have the same open mode specification, and REWIND phrase as specified in the OPEN statement. If an implicit OPEN statement results in the execution of a declarative procedure that executes a RESUME statement with the NEXT STATEMENT phrase, processing resumes at the next implicit OPEN statement, if any.

Label records

Label processing is not supported.

A warning message is issued if any of the following language elements are encountered:

- LABEL RECORDS IS data-name
- USE...AFTER...LABEL PROCEDURE

OPEN statement notes

The topic provides notes for the OPEN statement.

The notes are:

1. The successful execution of an OPEN statement determines the availability of the file and results in that file being in open mode. A file is *available* if it is physically present and recognized by the input-output control system. The following table shows the results of opening available and unavailable files.

   Table 52. ***Availability of a file***

Opened as	File is available	File is unavailable
INPUT	Normal open	Open is unsuccessful. (file status 35)
INPUT (optional file)	Normal open	Normal open; the first read causes the at end condition or the invalid key condition. (file status 05)
I-O	Normal open	Open is unsuccessful. (file status 35)
I-O (optional file)	Normal open	Open causes the file to be created. (file status 05)
OUTPUT	Normal open; the file contains no records	Open causes the file to be created.
EXTEND	Normal open	Open is unsuccessful. (file status 35)
EXTEND (optional file)	Normal open	Open causes the file to be created. (file status 05)

2. The successful execution of the OPEN statement places the file in open status and makes the associated record area available to the program.
3. The OPEN statement does not obtain or release the first data record.
4. You can move data to or from the record area only when the file is in open status.
5. An OPEN statement must be successfully executed prior to the execution of any of the permissible input-output statements, except a SORT or MERGE statement with the USING or GIVING phrase. In

the following table, an 'X' indicates that the specified statement can be used with the open mode given at the top of the column.

Table 53. ***Permissible statements for sequential files***

Statement	Input open mode	Output open mode	I-O open mode	Extend open mode
READ	X		X	
WRITE		X		X
REWRITE			X	

In the following table, an 'X' indicates that the specified statement, used in the access mode given for that row, can be used with the open mode given at the top of the column.

Table 54. ***Permissible statements for indexed and relative files***

File access mode	Statement	Input open mode	Output open mode	I-O open mode	Extend open mode
Sequential	READ	X		X	
	WRITE		X		X
	REWRITE			X	
	START	X		X	
	DELETE			X	
Random	READ	X		X	
	WRITE		X	X	
	REWRITE			X	
	START				
	DELETE			X	
Dynamic	READ	X		X	
	WRITE		X	X	
	REWRITE			X	
	START	X		X	
	DELETE			X	

In the following table, an 'X' indicates that the specified statement can be used with the open mode given at the top of the column.

Table 55. ***Permissible statements for line-sequential files***

Statement	Input open mode	Output open mode	I-O open mode	Extend open mode
READ	X			
WRITE		X		X
REWRITE				

1. A file can be opened for INPUT, OUTPUT, I-O, or EXTEND (sequential and line-sequential files only) in the same program. After the first OPEN statement execution for a given file, each subsequent OPEN statement execution must be preceded by a successful CLOSE file statement execution without the LOCK phrase.
2. If the FILE STATUS clause is specified in the file-control entry, the associated file status key is updated when the OPEN statement is executed.
3. If an OPEN statement is executed for a file that is already open, the EXCEPTION/ERROR procedure (if specified) for this file is run.

PERFORM statement

The PERFORM statement transfers control explicitly to one or more procedures and implicitly returns control to the next executable statement after execution of the specified procedures is completed.

Format 1: Basic PERFORM statement

```
►► PERFORM ┬─ procedure-name-1 ─┬─────────────────────────────┬──────────────────────────────┬──►◄
           │                    │                             │                              │
           │                    └─ THROUGH ─┬─ procedure-name-2 ─┘                              │
           │                                │                                                  │
           │                                └─ THRU ─┘                                          │
           │                                                                                    │
           └──────────────────────────────────────────────────────────────────────────────────┬─ END-PERFORM ─┘
                                                                                              │
                                                                                              └─ imperative-statement-1 ─┘
```

procedure-name-1 , procedure-name-2

Must name a section or paragraph in the procedure division.

When both *procedure-name-1* and *procedure-name-2* are specified, if either is a procedure-name in a declarative procedure, both must be procedure-names in the same declarative procedure.

If *procedure-name-1* is specified, *imperative-statement-1* and the END-PERFORM phrase must not be specified.

If *procedure-name-1* is omitted, *imperative-statement-1* and the END-PERFORM phrase must be specified.

imperative-statement-1

The statements to be executed for an in-line PERFORM

Inline and out-of-line PERFORM statements

The PERFORM statement is an inline PERFORM statement, when *procedure-name-1* is omitted.

The PERFORM statement is an out-of-line PERFORM statement, when *procedure-name-1* is specified.

An inline PERFORM must be delimited by the END-PERFORM phrase.

The inline and out-of-line formats cannot be combined. For example, if *procedure-name-1* is specified, imperative statements and the END-PERFORM phrase must not be specified.

You can use the EXIT PERFORM statement to exit from an inline PERFORM without using a GO TO statement or a PERFORM ... THROUGH statement. For details, see “Format 5 (inline-perform)” on page 308.

END-PERFORM

Delimits the scope of the in-line PERFORM statement. Execution of an in-line PERFORM is completed after the last statement contained within it has been executed.

Basic PERFORM statement

The procedures referenced in the basic PERFORM statement are executed once, and control then passes to the next executable statement following the PERFORM statement.

Attention: A PERFORM statement must not cause itself to be executed. This constitutes a recursive PERFORM, which can cause unpredictable results. Therefore, you must not specify recursive PERFORM statements.

An in-line PERFORM statement functions according to the same general rules as an otherwise identical out-of-line PERFORM statement, except that statements contained within the in-line PERFORM are executed in place of the statements contained within the range of *procedure-name-1* (through *procedure-name-2*, if specified). Unless specifically qualified by the word *in-line* or the word *out-of-line*, all the rules that apply to the out-of-line PERFORM statement also apply to the in-line PERFORM.

Whenever an out-of-line PERFORM statement is executed, control is transferred to the first statement of the procedure named *procedure-name-1*. Control is always returned to the statement following the PERFORM statement. The point from which this control is returned is determined as follows:

- If *procedure-name-1* is a paragraph name and *procedure-name-2* is not specified, the return is made after the execution of the last statement of the *procedure-name-1* paragraph.
- If *procedure-name-1* is a section name and *procedure-name-2* is not specified, the return is made after the execution of the last statement of the last paragraph in the *procedure-name-1* section.
- If *procedure-name-2* is specified and it is a paragraph name, the return is made after the execution of the last statement of the *procedure-name-2* paragraph.
- If *procedure-name-2* is specified and it is a section name, the return is made after the execution of the last statement of the last paragraph in the *procedure-name-2* section.

The only necessary relationship between *procedure-name-1* and *procedure-name-2* is that a consecutive sequence of operations is executed, beginning at the procedure named by *procedure-name-1* and ending with the execution of the procedure named by *procedure-name-2*.

PERFORM statements can be specified within the performed procedure. If there are two or more logical paths to the return point, then *procedure-name-2* can name a paragraph that consists only of an EXIT statement; all the paths to the return point must then lead to this paragraph.

When the performed procedures include another PERFORM statement, the sequence of procedures associated with the embedded PERFORM statement must be totally included in or totally excluded from the performed procedures of the first PERFORM statement. That is, an active PERFORM statement whose execution point begins within the range of performed procedures of another active PERFORM statement must not allow control to pass through the exit point of the other active PERFORM statement. However, two or more active PERFORM statements can have a common exit.

When control passes to the sequence of procedures by means other than a PERFORM statement, control passes through the exit point to the next executable statement, as if no PERFORM statement referred to these procedures.

The following figures illustrate valid sequences of execution for PERFORM statements.

Example 1

```
     Display 'Start PERFORM example1'.

X.   PERFORM a THRU m
     Display 'End PERFORM example1'
     Goback.

a.   Display 'a'.
d.   Display 'd'
     PERFORM f THRU j.
f.   Display 'f'.
j.   Display 'j'.
m.   Display 'm'.
```

The output for example 1 looks like this:

```
OUTPUT:
Start PERFORM example1
a
d
f
j
f
j
m
End   PERFORM example1
```

Example 2

```
     Display 'Start PERFORM example2'.

X.   PERFORM a THRU m
     Display 'End PERFORM example2'
     Goback.

a.   Display 'a'.
d.   Display 'd'
     PERFORM f THRU j.
h.   Display ‘h’.
m.   Display ‘m’.
f.   Display ‘f’.
j.   Display ‘j’.
```

The output for example 2 looks like this:

```
OUTPUT:
Start PERFORM example2
a
d
```

```
f
j
h
m
End   PERFORM example2
```

Example 3

```
     Display 'Start PERFORM example3'.

X.   PERFORM a THRU m
     Display 'End PERFORM example3'
     Goback.

a.   Display 'a'.
f.   Display 'f'.
m.   Display 'm'.
j.   Display 'j'.
d.   Display 'd'
     PERFORM f THRU j.
```

The output of example 3 looks like this:

```
OUTPUT:
Start PERFORM example3
a
f
m
End   PERFORM example3
```

Example 4

```
     Display 'Start PERFORM example4'.

X.   PERFORM a THRU m
     Display 'End PERFORM example4'
     Goback.

a.   Display 'a'.
d.   Display 'd'
     PERFORM j THRU m.
f.   Display 'f'.
j.   Display 'j'.
m.   Display 'm'.
```

The output for example 4 looks like this:

```
OUTPUT:
Start PERFORM example4
a
d
j
m
f
j
m
End   PERFORM example4
```

PERFORM with TIMES phrase

The procedures referred to in the TIMES phrase of the PERFORM statement are executed the number of times specified by the value in *identifier-1* or *integer-1*, up to a maximum of 999,999,999 times. Control then passes to the next executable statement following the PERFORM statement.

Format 2: PERFORM statement with TIMES phrase

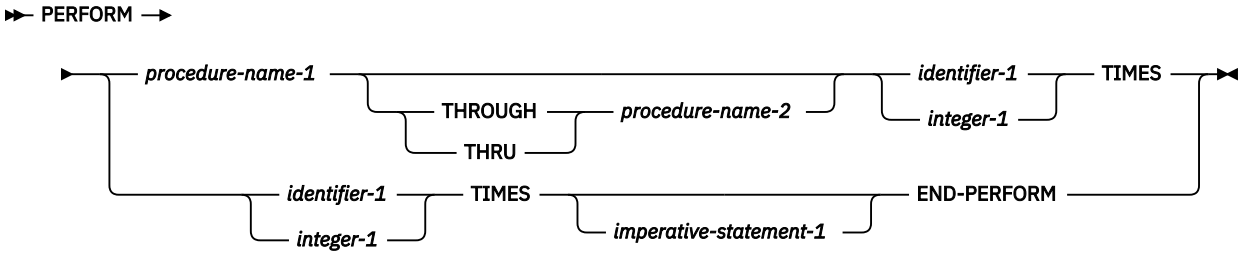

If *procedure-name-1* is specified, *imperative-statement-1* and the END-PERFORM phrase must not be specified.

identifier-1

Must name an integer item. *identifier-1* cannot be a windowed date field.

If *identifier-1* is zero or a negative number at the time the PERFORM statement is initiated, control passes to the statement following the PERFORM statement.

After the PERFORM statement has been initiated, any change to *identifier-1* has no effect in varying the number of times the procedures are initiated.

integer-1

Can be a positive signed integer.

PERFORM with UNTIL phrase

In the UNTIL phrase format, the procedures referred to are performed *until* the condition specified by the UNTIL phrase is true. Control is then passed to the next executable statement following the PERFORM statement.

Format 3: PERFORM statement with UNTIL phrase

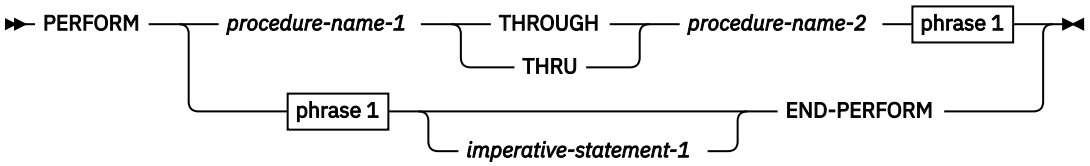

phrase 1

```
▶▶──┬──────────────────────────────────┬──UNTIL──condition-1──▶◀
    │                                  │
    │                  ┌─BEFORE─┐      │
    └──┬──────────┬─TEST─┼────────┼──┘
       │          │      │        │
       └─WITH─┘          └─AFTER──┘
```

If *procedure-name-1* is specified, *imperative-statement-1* and the END-PERFORM phrase must not be specified.

condition-1

Can be any condition described under "Conditional expressions" on page 240. If the condition is true at the time the PERFORM statement is initiated, the specified procedures are not executed.

Any subscripting associated with the operands specified in *condition-1* is evaluated each time the condition is tested.

If the TEST BEFORE phrase is specified or assumed, the condition is tested before any statements are executed (corresponds to DO WHILE).

If the TEST AFTER phrase is specified, the statements to be performed are executed at least once before the condition is tested (corresponds to DO UNTIL).

In either case, if the condition is true, control is transferred to the next executable statement following the end of the PERFORM statement. If neither the TEST BEFORE nor the TEST AFTER phrase is specified, the TEST BEFORE phrase is assumed.

PERFORM with VARYING phrase

The VARYING phrase increases or decreases the value of one or more identifiers or index-names, according to certain rules.

For more information, see "Varying phrase rules" on page 351.

The format-4 VARYING phrase PERFORM statement can serially search an entire seven-dimensional table.

Format 4: PERFORM statement with VARYING phrase

```
▶▶─PERFORM─▶

▶──┬──procedure-name-1──┬──────────────────────────────┬──┬──────────┬──┬──────────┬──▶◀
   │                    │                              │  │ phrase 1 │  │ phrase 2 │
   │                    │          ┌─procedure-name-2─┐  │          │  │          │
   │                    └──┬─THROUGH─┼─────────────────┼──┘          │  │          │
   │                       └─THRU────┘                 │             │  │          │
   │                                                   │             │  │          │
   └──┬──────────┬──┬──────────┬──┬──────────────────┬──┬──END-PERFORM──────────┘
      │ phrase 1 │  │          │  │                  │
      │          │  │          │  │ imperative-statement-1
      │          │  │          │  │
      │          │  │          │  │
```

phrase 1

```
▶▶──┬──────────────────────────────────┬──VARYING──┬──identifier-2──┬──FROM──▶
    │                                  │           │                │
    │                  ┌─BEFORE─┐      │           └─index-name-1───┘
    └──┬──────────┬─TEST─┼────────┼──┘
       │          │      │        │
       └─WITH─┘          └─AFTER──┘

▶──┬──identifier-3──┬──BY──┬──identifier-4──┬──UNTIL──condition-1──▶◀
   │                │      │                │
   │ index-name-2   │      │ literal-2      │
   │                │      │                │
   └─literal-1──────┘      └────────────────┘
```

phrase 2

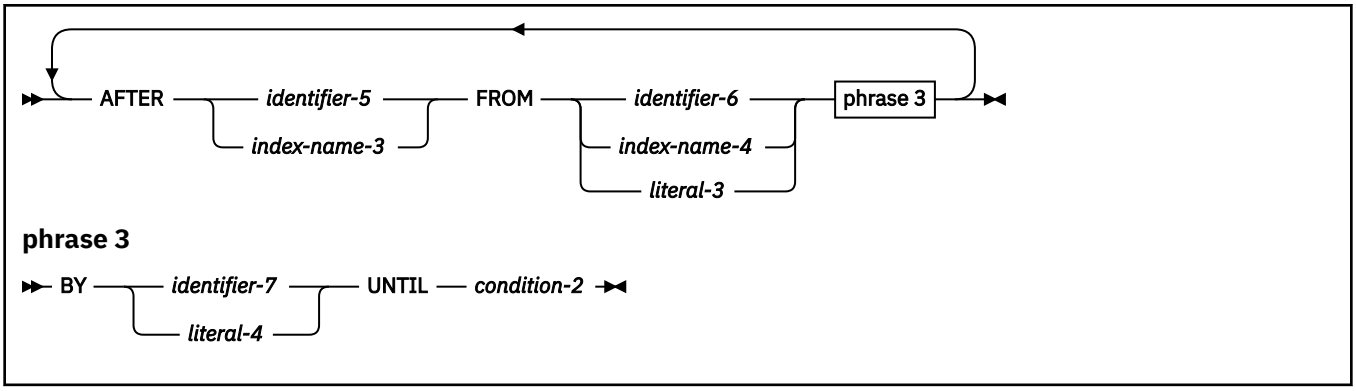

If *procedure-name-1* is specified, *imperative-statement-1* and the END-PERFORM phrase must not be specified. If *procedure-name-1* is omitted, the AFTER phrase must not be specified.

identifier-2* through *identifier-7
Must name a numeric elementary item. These identifiers cannot be windowed date fields.

literal-1* through *literal-4
Must represent a numeric literal.

condition-1*, *condition-2
Can be any condition described under "Conditional expressions" on page 240. If the condition is true at the time the PERFORM statement is initiated, the specified procedures are not executed.

After the conditions specified in the UNTIL phrase are satisfied, control is passed to the next executable statement following the PERFORM statement.

If any of the operands specified in *condition-1* or *condition-2* is subscripted, reference modified, or is a function-identifier, the subscript, reference-modifier, or function is evaluated each time the condition is tested.

Floating-point data items and literals can be used anywhere a numeric data item or literal can be specified.

When TEST BEFORE is indicated, all specified conditions are tested before the first execution, and the statements to be performed are executed, if at all, only when *all* specified tests fail. When TEST AFTER is indicated, the statements to be performed are executed at least once, before any condition is tested.

If neither the TEST BEFORE nor the TEST AFTER phrase is specified, the TEST BEFORE phrase is assumed.

Varying identifiers

The way in which operands are increased or decreased depends on the number of variables specified. In the discussion, every reference to *identifier-n* refers equally to *index-name-n* (except when *identifier-n* is the object of the BY phrase).

If *identifier-2* or *identifier-5* is subscripted, the subscripts are evaluated each time the content of the data item referenced by the identifier is set or augmented. If *identifier-3*, *identifier-4*, *identifier-6*, or *identifier-7* is subscripted, the subscripts are evaluated each time the content of the data item referenced by the identifier is used in a setting or an augmenting operation.

The following figure illustrates the logic of the PERFORM statement when an identifier is varied with TEST BEFORE.

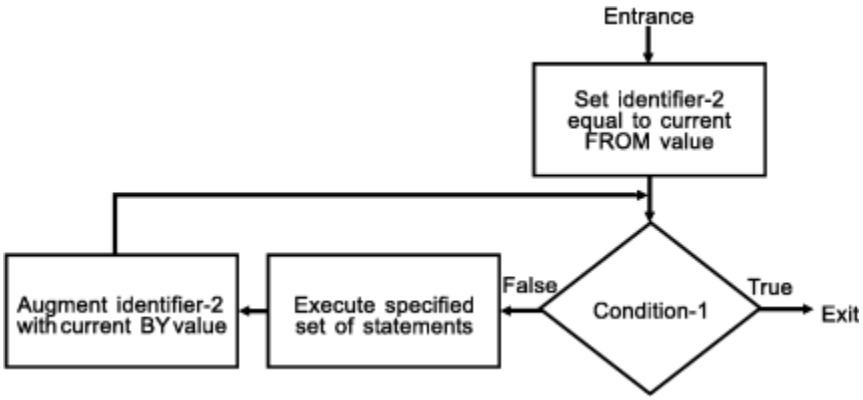

The following figure illustrates the logic of the PERFORM statement when an identifier is varied with TEST AFTER.

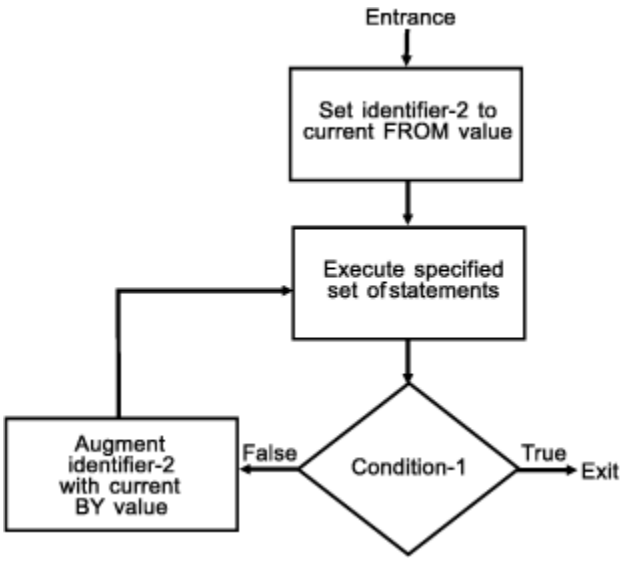

Varying two identifiers

The topic lists steps of varying two identifiers.

```
PERFORM PROCEDURE-NAME-1 THROUGH PROCEDURE-NAME-2
      VARYING IDENTIFIER-2 FROM IDENTIFIER-3
            BY IDENTIFIER-4 UNTIL CONDITION-1
         AFTER IDENTIFIER-5 FROM IDENTIFIER-6
            BY IDENTIFIER-7 UNTIL CONDITION-2
```

1. *identifier-2* and *identifier-5* are set to their initial values, *identifier-3* and *identifier-6*, respectively.
2. *condition-1* is evaluated as follows:
   a. If it is false, steps 3 through 7 are executed.
   b. If it is true, control passes directly to the statement following the PERFORM statement.
3. *condition-2* is evaluated as follows:
   a. If it is false, steps 4 through 6 are executed.
   b. If it is true, *identifier-2* is augmented by *identifier-4*, *identifier-5* is set to the current value of *identifier-6*, and step 2 is repeated.
4. *procedure-name-1* and *procedure-name-2* are executed once (if specified).
5. *identifier-5* is augmented by *identifier-7*.
6. Steps 3 through 5 are repeated until *condition-2* is true.

7. Steps 2 through 6 are repeated until *condition-1* is true.

At the end of PERFORM statement execution:

- *identifier-5* contains the current value of *identifier-6*.
- *identifier-2* has a value that exceeds the last-used setting by the increment or decrement value (unless *condition-1* was true at the beginning of PERFORM statement execution, in which case, *identifier-2* contains the current value of *identifier-3*).

The following figure illustrates the logic of the PERFORM statement when two identifiers are varied with TEST BEFORE.

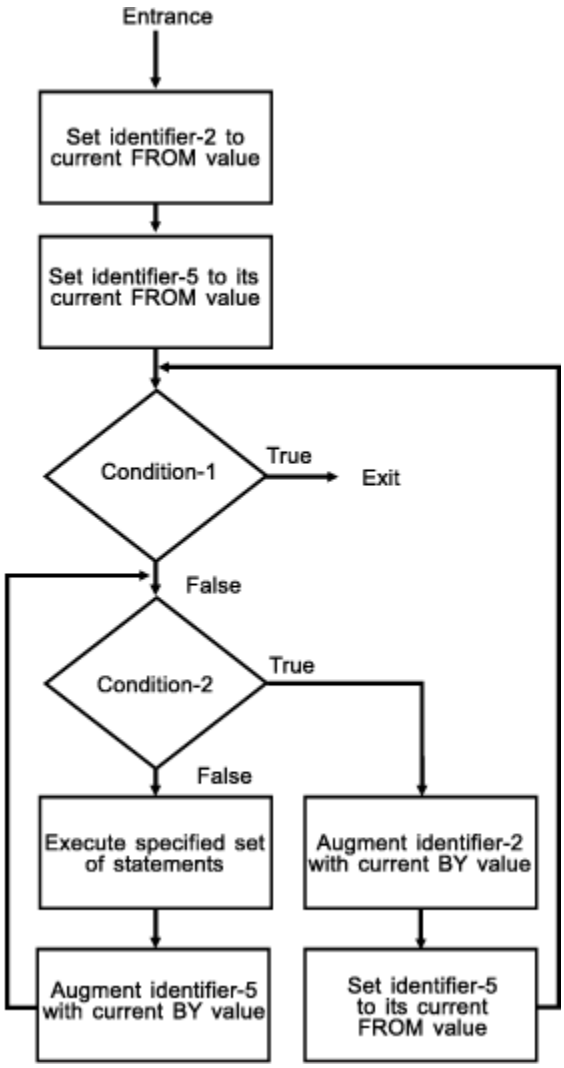

The following figure illustrates the logic of the PERFORM statement when two identifiers are varied with TEST AFTER.

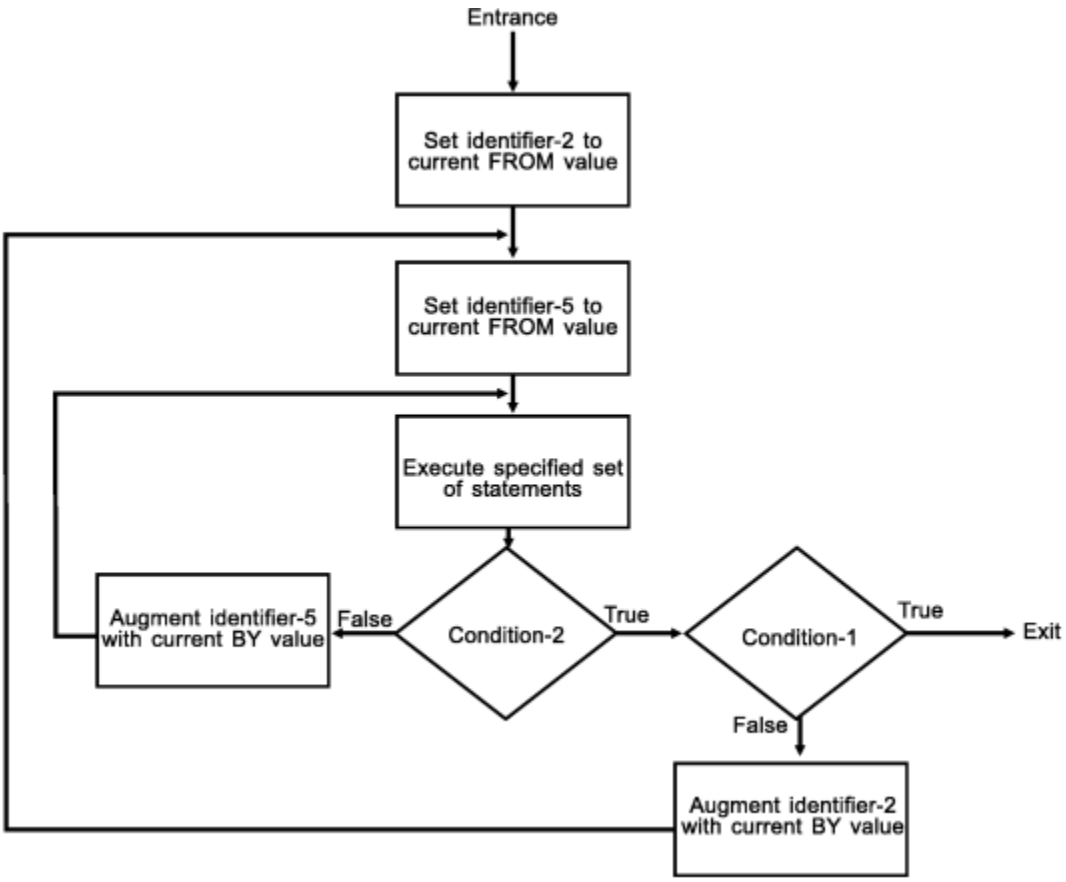

Varying three identifiers

The topic lists steps of varying three identifiers.

```
PERFORM PROCEDURE-NAME-1 THROUGH PROCEDURE-NAME-2
      VARYING IDENTIFIER-2 FROM IDENTIFIER-3
            BY IDENTIFIER-4 UNTIL CONDITION-1
          AFTER IDENTIFIER-5 FROM IDENTIFIER-6
            BY IDENTIFIER-7 UNTIL CONDITION-2
          AFTER IDENTIFIER-8 FROM IDENTIFIER-9
            BY IDENTIFIER-10 UNTIL CONDITION-3
```

The actions are the same as those for two identifiers, except that *identifier-8* goes through the complete cycle each time that *identifier-5* is augmented by *identifier-7*, which, in turn, goes through a complete cycle each time that *identifier-2* is varied.

At the end of PERFORM statement execution:

- *identifier-5* and *identifier-8* contain the current values of *identifier-6* and *identifier-9*, respectively.
- *identifier-2* has a value exceeding its last-used setting by one increment/decrement value (unless *condition-1* was true at the beginning of PERFORM statement execution, in which case *identifier-2* contains the current value of *identifier-3*).

Varying more than three identifiers

You can produce analogous PERFORM statement actions to the previous example with the addition of up to four AFTER phrases.

Varying phrase rules

There are certain rules that apply to this phrase, no matter how many variables are specified.

The rules are:

- In the VARYING or AFTER phrases, when an index-name is specified:

- The index-name is initialized and incremented or decremented according to the rules under "INDEX phrase" on page 220. (See also "SET statement" on page 369.)
- In the associated FROM phrase, an identifier must be described as an integer and have a positive value; a literal must be a positive integer.
- In the associated BY phrase, an identifier must be described as an integer; a literal must be a nonzero integer.

- In the FROM phrase, when an index-name is specified:
  - In the associated VARYING or AFTER phrase, an identifier must be described as an integer. It is initialized as described in the SET statement.
  - In the associated BY phrase, an identifier must be described as an integer and have a nonzero value; a literal must be a nonzero integer.
- In the BY phrase, identifiers and literals must have nonzero values.
- Changing the values of identifiers or index-names in the VARYING, FROM, and BY phrases during execution changes the number of times the procedures are executed.

READ statement

For sequential access, the READ statement makes the next logical record from a file available to the object program. For random access, the READ statement makes a specified record from a direct-access file available to the object program.

When the READ statement is executed, the associated file must be open in INPUT or I-O mode.

Format 1: READ statement for sequential retrieval

```
READ — file-name-1 ┬─────────┬─┬──────────┬─┬──────────────────┬─┬──────────────────────────┬─┬──────────────────────────┬─┬──────────────────────────┬─┬──────────┬─
                   ├─ NEXT ──┤ │ RECORD ──┤ │ INTO — identifier-1 ─┤ │                          │ │                          │ │                          │ │          │
                   └─ PREVIOUS─┘ └──────────┘ └──────────────────┘ │ ┌─────────────────────┐  │ │ ┌─────────────────────┐  │ │ ┌─────────────────────┐  │ │ ┌────────┐  │
                                                                   ├─┤ AT ─┬─ END — imperative-statement-1 ─┤  ├─┤ NOT ─┬─ END — imperative-statement-2 ─┤  ├─┤ END-READ ─┤  ├─
                                                                   │ │     │                                │  │ │     │                                │  │ │           │  │
                                                                   └─┘     └────────────────────────────────┘  └─┘     └────────────────────────────────┘  └─┘           └──┘
```

Format 2: READ statement for random retrieval

```
READ — file-name-1 ┬──────────┬ ┬──────────────────────────┬
                   └ RECORD ──┘ └ INTO — identifier-1 ──────┘

┬──────────────────────────────────────────────────────────────┬
└ KEY ┬──────┬ data-name-1 ┬──────────┬ data-name-1 ──────────┘
      └ IS ──┘             └ record-key-name-1 ──┘

┬──────────────────────────────────────────────┬
└ INVALID ┬──────┬ imperative-statement-3 ──────┘
          └ KEY ─┘

┬──────────────────────────────────────────────────────────┬
└ NOT INVALID ┬──────┬ imperative-statement-4 ┬ END-READ ──┘
              └ KEY ─┘                        └
```

Restriction: *record-key-name* is supported for STL file system only.

file-name-1
Must be defined in a DATA DIVISION FD entry.

NEXT RECORD
Reads the next record in the logical sequence of records. NEXT is optional when the access mode is sequential, and has no effect on READ statement execution.

You must specify either the NEXT phrase or the PREVIOUS phrase to retrieve records sequentially from files in dynamic access mode.

PREVIOUS RECORD
Reads the previous record in the logical sequence of records. PREVIOUS applies to indexed and relative files with DYNAMIC access mode.

To retrieve records sequentially, you must specify either the NEXT phrase or the PREVIOUS phrase for files in dynamic access mode.

If you specify READ...PREVIOUS and no previous logical record exists, the AT END condition occurs and the READ statement is unsuccessful.

When you specify READ...PREVIOUS, the setting of the file position indicator is used to determine which record to make available according to the following rules:

- If the file position indicator indicates that no valid previous record has been established, the READ is unsuccessful.
- If the file position indicator is positioned by the execution of an OPEN statement, the AT END condition occurs.
- If the file position indicator is established by a previous START statement, the first existing record in the file whose relative record number (if a relative file) or whose key value (if an indexed file) is less than or equal to the file position indicator is selected.
- If the file position indicator is established by a previous READ statement, the first existing record in the file whose relative record number (if a relative file) or whose key value (if an indexed file) is less than the file position indicator is selected.

INTO *identifier-1*
identifier-1 is the receiving field.

identifier-1 must be a valid receiving field for the selected sending record description entry in accordance with the rules of the MOVE statement.

The record areas associated with *file-name-1* and *identifier-1* must not be the same storage area.

When there is only one record description associated with *file-name-1* or all the records and the data item referenced by *identifier-1* describe an elementary alphanumeric item or an alphanumeric group item, the result of the execution of a READ statement with the INTO phrase is equivalent to the application of the following rules in the order specified:

- The execution of the same READ statement without the INTO phrase.
- The current record is moved from the record area to the area specified by *identifier-1* according to the rules for the MOVE statement without the CORRESPONDING phrase. The size of the current record is determined by rules specified for the RECORD clause. If the file description entry contains a RECORD IS VARYING clause, the implied move is a group move. The implied MOVE statement does not occur if the execution of the READ statement was unsuccessful. Any subscripting or reference modification associated with *identifier-1* is evaluated after the record has been read and immediately before it is moved to the data item. The record is available in both the record area and the data item referenced by *identifier-1*.

  If *identifier-1* is a date field, then the implied MOVE statement is performed according to the behavior described under "Moves involving date fields" on page 334.

When there are multiple record descriptions associated with *file-name-1* and they do not all describe an alphanumeric group item or elementary alphanumeric item, the following rules apply:

1. If the file referenced by *file-name-1* is described as containing variable-length records, a group move will take place.
2. If the file referenced by *file-name-1* is described as containing fixed-length records, a move will take place according to the rules for a MOVE statement using, as a sending field description, the record that specifies the largest number of character positions. If more than one such record exists, the sending field record selected will be the one among those records that appears first under the description of *file-name-1*.

KEY IS phrase

The KEY IS phrase can be specified only for indexed files.

data-name-1 or *record-key-name-1* must be specified in the RECORD KEY clause or an ALTERNATE RECORD KEY clause associated with *file-name-1*. *data-name-1* or *record-key-name-1* can be qualified.

AT END phrases

For sequential access, both the AT END phrase and an applicable EXCEPTION/ERROR procedure can be omitted.

For information about at-end condition processing, see AT END condition.

INVALID KEY phrases

Both the INVALID KEY phrase and an applicable EXCEPTION/ERROR procedure can be omitted.

For information about INVALID KEY phrase processing, see "Invalid key condition" on page 277.

END-READ phrase

This explicit scope terminator serves to delimit the scope of the READ statement. END-READ permits a conditional READ statement to be nested in another conditional statement. END-READ can also be used with an imperative READ statement. For more information, see "Delimited scope statements" on page 266.

Multiple record processing

If more than one record description entry is associated with *file-name-1*, those records automatically share the same storage area; that is, they are implicitly redefined. After a READ statement is executed, only those data items within the range of the current record are replaced; data items stored beyond that range are undefined. The following example illustrates this concept.

If the range of the current record exceeds the record description entries for *file-name-1*, the record is truncated on the right to the maximum size.

In either of the previous cases, the READ statement is successful and the I-O status is set to 04 indicating that a record length conflict has occurred.

The following example shows two record areas of different sizes in an FD. When a shorter record is read, the content of the remaining record area is undefined.

```
FD INPUT-FILE LABEL RECORD OMITTED.
01    RECORD-1 PICTURE X(30).
01    RECORD-2 PICTURE X(20).
```

Content of input area when READ statement is executed:

```
ABCDEFGHIJKLMNOPQRSTUVWXYZ1234
```

Content of record being read in (RECORD-2):

```
01234567890123456789
```

Content of input area after READ statement is executed:

```
0123456789012345678?????????
```

The "?" characters are undefined characters in input area.

Sequential access mode

Format 1 must be used for all files in sequential access mode.

Execution of a format-1 READ statement retrieves the next logical record from the file. The next record accessed is determined by the file organization.

Sequential files

The NEXT RECORD is the next record in a logical sequence of records. The NEXT phrase need not be specified; it has no effect on READ statement execution.

If SELECT OPTIONAL is specified in the file-control entry for this file, and the file is unavailable during this execution of the object program, execution of the first READ statement causes an at-end condition; however, since no file is available, the system-defined end-of-file processing is not performed.

AT END condition

If the file position indicator indicates that no next logical record exists, or that an optional input file is not available, at-end condition processing occurs in a specific order.

The order is:

1. A value derived from the setting of the file position indicator is placed into the I-O status associated with *file-name-1* to indicate the at-end condition.

2. If the AT END phrase is specified in the statement causing the condition, control is transferred to *imperative-statement-1* in the AT END phrase. Any USE AFTER STANDARD EXCEPTION procedure associated with *file-name-1* is not executed.
3. If the AT END phrase is not specified and an applicable USE AFTER STANDARD EXCEPTION procedure exists, the procedure is executed. Return from that procedure is to the next executable statement following the end of the READ statement.

   Both the AT END phrase and an applicable EXCEPTION/ERROR procedure can be omitted.

   When the at-end condition occurs, execution of the READ statement is unsuccessful. The contents of the associated record area are undefined and the file position indicator is set to indicate that no valid next record has been established.

If an at-end condition does not occur during the execution of a READ statement, the AT END phrase is ignored, if specified, and the following actions occur:

1. The file position indicator is set and the I-O status associated with *file-name-1* is updated.
2. If an exception condition that is not an at-end condition exists, control is transferred to the end of the READ statement after the execution of any USE AFTER STANDARD EXCEPTION procedure applicable to *file-name-1*.

   If no USE AFTER STANDARD EXCEPTION procedure is specified, control is transferred to the end of the READ statement or to *imperative-statement-2*, if specified.
3. If no exception condition exists, the record is made available in the record area and any implicit move resulting from the presence of an INTO phrase is executed. Control is transferred to the end of the READ statement or to *imperative-statement-2*, if specified. In the latter case, execution continues according to the rules for each statement specified in *imperative-statement-2*. If a procedure branching or conditional statement which causes explicit transfer of control is executed, control is transferred in accordance with the rules for that statement; otherwise, upon completion of the execution of *imperative-statement-2*, control is transferred to the end of the READ statement.

After the unsuccessful execution of a READ statement, the contents of the associated record area are undefined and the file position indicator is set to indicate that no valid next record has been established. Attempts to access or move data into the record area after an unsuccessful read can result in a segmentation violation.

Indexed or relative files

The NEXT RECORD is the next logical record in the key sequence.

The PREVIOUS RECORD is the preceding logical record in the key sequence.

For indexed files, the key sequence is the sequence of ascending values of the current key of reference. For relative files, the key sequence is the sequence of ascending values of relative record numbers for records that exist in the file.

Before the READ statement is executed, the file position indicator must have been set by a successful OPEN, START, or READ statement. When the READ statement is executed, the record indicated by the file position indicator is made available if it is still accessible through the path indicated by the file position indicator.

If the record is no longer accessible (because it has been deleted, for example), the file position indicator is updated to point to the next (or previous) existing record in the file, and that record is made available.

For files in sequential access mode, the NEXT phrase need not be specified.

For files in dynamic access mode, the NEXT phrase (or the PREVIOUS phrase) must be specified for sequential record retrieval.

AT END condition

This condition exists when the file position indicator indicates that no next logical record exists (or no previous record exists) or that an optional input file is not available. See the discussion of PREVIOUS RECORD above.

If neither an at-end nor an invalid key condition occurs during the execution of a READ statement, the AT END or the INVALID KEY phrase is ignored, if specified. The same actions occur as when the at-end condition does not occur with sequential files (see AT END condition).

Sequentially accessed indexed files

When an ALTERNATE RECORD KEY with DUPLICATES is the key of reference, file records with duplicate key values are made available in the order in which they were placed in the file.

Sequentially accessed relative files

If the RELATIVE KEY clause is specified for this file, READ statement execution updates the RELATIVE KEY data item to indicate the relative record number of the record being made available.

Random access mode

Format 2 must be specified for indexed and relative files in random access mode, and also for files in the dynamic access mode when record retrieval is random.

Execution of the READ statement depends on the file organization, as explained in the following sections.

Indexed files

Execution of a format-2 READ statement causes the value of the key of reference to be compared with the value of the corresponding key data item in the file records, until the first record having an equal value is found. The file position indicator is positioned to this record, which is then made available. If no record can be so identified, an INVALID KEY condition exists, and READ statement execution is unsuccessful. (See “Invalid key condition” on page 277 for details of the invalid key condition.)

If the KEY phrase is not specified, the prime RECORD KEY becomes the key of reference for this request. When dynamic access is specified, the prime RECORD KEY is also used as the key of reference for subsequent executions of sequential READ statements, until a different key of reference is established.

When the KEY phrase is specified, *data-name-1* becomes the key of reference for this request. When dynamic access is specified, this key of reference is used for subsequent executions of sequential READ statements, until a different key of reference is established.

For an indexed file accessed through a certain file connector, if the KEY phrase is specified, *data-name-1* or *record-key-name-1* becomes the key of reference for this retrieval. When dynamic access is specified, this key of reference is also used for subsequent executions of sequential READ statements for the file through the file connector, until a different key of reference is established for the file through that file connector.

Relative files

Execution of a format-2 READ statement sets the file position indicator pointer to the record whose relative record number is contained in the RELATIVE KEY data item, and makes that record available.

If the file does not contain such a record, the INVALID KEY condition exists, and READ statement execution is unsuccessful. (See “Invalid key condition” on page 277 for details of the invalid key condition).

The KEY phrase must not be specified for relative files.

Dynamic access mode

For files with indexed or relative organization, dynamic access mode can be specified in the file-control entry. In dynamic access mode, either sequential or random record retrieval can be used, depending on the format used.

Format 1 with the NEXT phrase must be specified for sequential retrieval. All other rules for sequential access apply.

READ statement notes

This topic provides notes on the READ statement.

- If the FILE-STATUS clause is specified in the file-control entry, the associated file status key is updated when the READ statement is executed.
- After unsuccessful READ statement execution, the contents of the associated record area and the value of the file position indicator are undefined. Attempts to access or move data into the record area after an unsuccessful read can result in a segmentation violation.

RELEASE statement

The RELEASE statement transfers records from an input/output area to the initial phase of a sorting operation.

The RELEASE statement can be used only within the range of an INPUT PROCEDURE associated with a SORT statement.

Format: RELEASE

```
►► RELEASE ── record-name-1 ──┬──────────────────────┬──►◄
                              └── FROM ── identifier-1 ──┘
```

Within an INPUT PROCEDURE, at least one RELEASE statement must be specified.

When the RELEASE statement is executed, the current contents of *record-name-1* are placed in the sort file. This makes the record available to the initial phase of the sorting operation.

record-name-1
Must specify the name of a logical record in a sort-merge file description entry (SD). *record-name-1* can be qualified.

FROM phrase
The result of the execution of the RELEASE statement with the FROM *identifier-1* phrase is equivalent to the execution of the following statements in the order specified.

```
MOVE identifier-1 to record-name-1.
RELEASE record-name-1.
```

The MOVE is performed according to the rules for the MOVE statement without the CORRESPONDING phrase.

identifier-1
identifier-1 must reference one of the following items:

- An entry in the WORKING-STORAGE SECTION, the LOCAL-STORAGE SECTION, or the LINKAGE SECTION
- A record description for another previously opened file
- An alphanumeric or national function.

identifier-1 must be a valid sending item with *record-name-1* as the receiving item in accordance with the rules of the MOVE statement.

identifier-1 and *record-name-1* must not refer to the same storage area.

After the RELEASE statement is executed, the information is still available in *identifier-1*. (See “INTO and FROM phrases” on page 277 under "Common processing facilities".)

If the RELEASE statement is executed without specifying the SD entry for *file-name-1* in a SAME RECORD AREA clause, the information in *record-name-1* is no longer available.

If the SD entry is specified in a SAME RECORD AREA clause, *record-name-1* is still available as a record of the other files named in that clause.

When FROM *identifier-1* is specified, the information is still available in *identifier-1*.

When control passes from the INPUT PROCEDURE, the sort file consists of all those records placed in it by execution of RELEASE statements.

RETURN statement

The RETURN statement transfers records from the final phase of a sorting or merging operation to an OUTPUT PROCEDURE.

The RETURN statement can be used only within the range of an OUTPUT PROCEDURE associated with a SORT or MERGE statement.

Format: RETURN statement

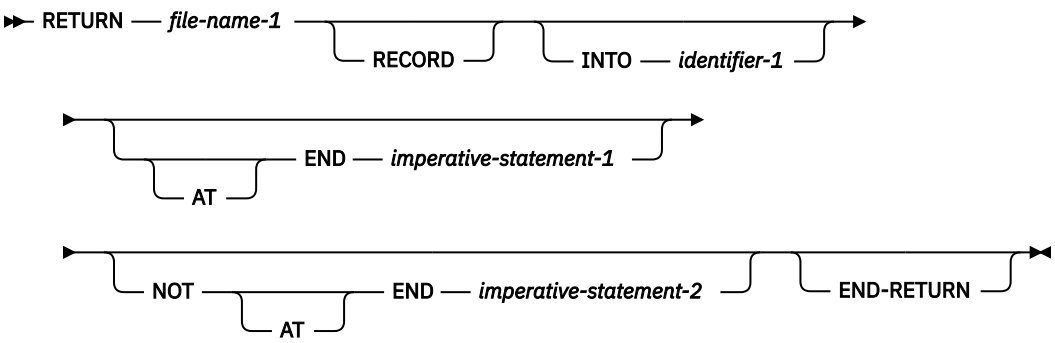

Within an OUTPUT PROCEDURE, at least one RETURN statement must be specified.

When the RETURN statement is executed, the next record from *file-name-1* is made available for processing by the OUTPUT PROCEDURE.

file-name-1

Must be described in a DATA DIVISION SD entry.

If more than one record description is associated with *file-name-1*, those records automatically share the same storage; that is, the area is implicitly redefined. After RETURN statement execution, only the contents of the current record are available. If any data items lie beyond the length of the current record, their contents are undefined.

INTO phrase

When there is only one record description associated with *file-name-1* or all the records and the data item referenced by *identifier-1* describe an elementary alphanumeric item or an alphanumeric group item, the result of the execution of a RETURN statement with the INTO phrase is equivalent to the application of the following rules in the order specified:

- The execution of the same RETURN statement without the INTO phrase.

- The current record is moved from the record area to the area specified by *identifier-1* according to the rules for the MOVE statement without the CORRESPONDING phrase. The size of the current record is determined by rules specified for the RECORD clause. If the file description entry contains a RECORD IS VARYING clause, the implied move is a group move. The implied MOVE statement does not occur if the execution of the RETURN statement was unsuccessful. Any subscripting or reference modification associated with *identifier-1* is evaluated after the record has been read and immediately before it is moved to the data item. The record is available in both the record area and the data item referenced by *identifier-1*.

When there are multiple record descriptions associated with *file-name-1* and they do not all describe an alphanumeric group item or elementary alphanumeric item, the following rules apply:

1. If the file referenced by *file-name-1* contains variable-length records, a group move takes place.
2. If the file referenced by *file-name-1* contains fixed-length records, a move takes place according to the rules for a MOVE statement using, as a sending field description, the record that specifies the largest number of character positions. If more than one such record exists, the sending field record selected will be the one among those records that appears first under the description of *file-name-1*.

identifier-1 must be a valid receiving field for the selected sending record description entry in accordance with the rules of the MOVE statement.

The record areas associated with *file-name-1* and *identifier-1* must not be the same storage area.

AT END phrases

The imperative-statement specified on the AT END phrase executes after all records have been returned from *file-name-1*. No more RETURN statements can be executed as part of the current output procedure.

If an at-end condition does not occur during the execution of a RETURN statement, then after the record is made available and after executing any implicit move resulting from the presence of an INTO phrase, control is transferred to the imperative statement specified by the NOT AT END phrase. If an at-end condition does occur, control is transferred to the end of the RETURN statement.

END-RETURN phrase

This explicit scope terminator serves to delimit the scope of the RETURN statement. END-RETURN permits a conditional RETURN statement to be nested in another conditional statement. END-RETURN can also be used with an imperative RETURN statement.

For more information, see “Delimited scope statements” on page 266.

REWRITE statement

The REWRITE statement logically replaces an existing record in a direct-access file. When the REWRITE statement is executed, the associated direct-access file must be open in I-O mode.

The REWRITE statement is not supported for line-sequential files.

Format: REWRITE statement

```
REWRITE ── record-name-1 ┬──────────────────────┬──►
                         └─ FROM ── identifier-1 ─┘

►┬──────────────────────────────────────────────────────────────────────────►
 └─ INVALID ┬──────────────┬── imperative-statement-1 ─┬
            └─ KEY ────────┘                           │
►┬──────────────────────────────────────────────────────────────────────────►
 └─ NOT INVALID ┬──────────────┬── imperative-statement-2 ─┬─ END-REWRITE ─┬──►◄
                └─ KEY ────────┘                           │               │
```

record-name-1

Must be the name of a logical record in a DATA DIVISION FD entry. The record-name can be qualified.

FROM phrase

The result of the execution of the REWRITE statement with the FROM *identifier-1* phrase is equivalent to the execution of the following statements in the order specified.

```
MOVE identifier-1 TO record-name-1.
REWRITE record-name-1
```

The MOVE is performed according to the rules for the MOVE statement without the CORRESPONDING phrase.

identifier-1

identifier-1 can reference one of the following items:

- A record description for another previously opened file
- An alphanumeric or national function
- A data item defined in the WORKING-STORAGE SECTION, the LOCAL-STORAGE SECTION, or the LINKAGE SECTION

identifier-1 must be a valid sending item with *record-name-1* as the receiving item in accordance with the rules of the MOVE statement.

identifier-1 and *record-name-1* must not refer to the same storage area.

After the REWRITE statement is executed, the information is still available in *identifier-1* (“INTO and FROM phrases” on page 277 under "Common processing facilities").

INVALID KEY phrases

An INVALID KEY condition exists when:

- The access mode is sequential, and the value contained in the prime RECORD KEY of the record to be replaced does not equal the value of the prime RECORD KEY data item of the last-retrieved record from the file
- The value contained in the prime RECORD KEY does not equal that of any record in the file
- The value of an ALTERNATE RECORD KEY data item for which DUPLICATES is not specified is equal to that of a record already in the file

For details of invalid key processing, see Invalid key condition.

END-REWRITE phrase

This explicit scope terminator serves to delimit the scope of the REWRITE statement. END-REWRITE permits a conditional REWRITE statement to be nested in another conditional statement. END-REWRITE can also be used with an imperative REWRITE statement.

For more information, see "Delimited scope statements" on page 266.

Reusing a logical record

After successful execution of a REWRITE statement, the logical record is no longer available in *record-name-1* unless the associated file is named in a SAME RECORD AREA clause (in which case, the record is also available as a record of the other files named in the SAME RECORD AREA clause).

The file position indicator is not affected by execution of the REWRITE statement.

If the FILE STATUS clause is specified in the file-control entry, the associated file status key is updated when the REWRITE statement is executed.

Sequential files

For files in the sequential access mode, the last prior input/output statement executed for this file must be a successfully executed READ statement. When the REWRITE statement is executed, the record retrieved by that READ statement is logically replaced.

The number of character positions in *record-name-1* must equal the number of character positions in the record being replaced.

The INVALID KEY phrase must not be specified for a file with sequential organization. An EXCEPTION/ERROR procedure can be specified.

Indexed files

The number of character positions in *record-name-1* can be different from the number of character positions in the record being replaced.

When the access mode is sequential, the record to be replaced is specified by the value contained in the prime RECORD KEY. When the REWRITE statement is executed, this value must equal the value of the prime record key data item in the last record read from this file.

Both the INVALID KEY phrase and an applicable EXCEPTION/ERROR procedure can be omitted.

When the access mode is random or dynamic, the record to be replaced is specified by the value contained in the prime RECORD KEY.

Values of ALTERNATE RECORD KEY data items in the rewritten record can differ from those in the record being replaced. The system ensures that later access to the record can be based upon any of the record keys.

If an invalid key condition exists, the execution of the REWRITE statement is unsuccessful, the updating operation does not take place, and the data in *record-name-1* is unaffected. (See Invalid key condition under "Common processing facilities".)

Relative files

The number of character positions in *record-name-1* can be different from the number of character positions in the record being replaced.

For relative files in sequential access mode, the INVALID KEY phrase must not be specified. An EXCEPTION/ERROR procedure can be specified.

For relative files in random or dynamic access mode, the INVALID KEY phrase or an applicable EXCEPTION/ERROR procedure can be specified. Both can be omitted.

When the access mode is random or dynamic, the record to be replaced is specified in the RELATIVE KEY data item. If the file does not contain the record specified, an invalid key condition exists, and, if specified, the INVALID KEY imperative-statement is executed. (See Invalid key condition under "Common processing facilities".) The updating operation does not take place, and the data in record-name is unaffected.

SEARCH statement

The SEARCH statement searches a table for an element that satisfies the specified condition and adjusts the associated index to indicate that element.

Format 1: SEARCH statement for serial search

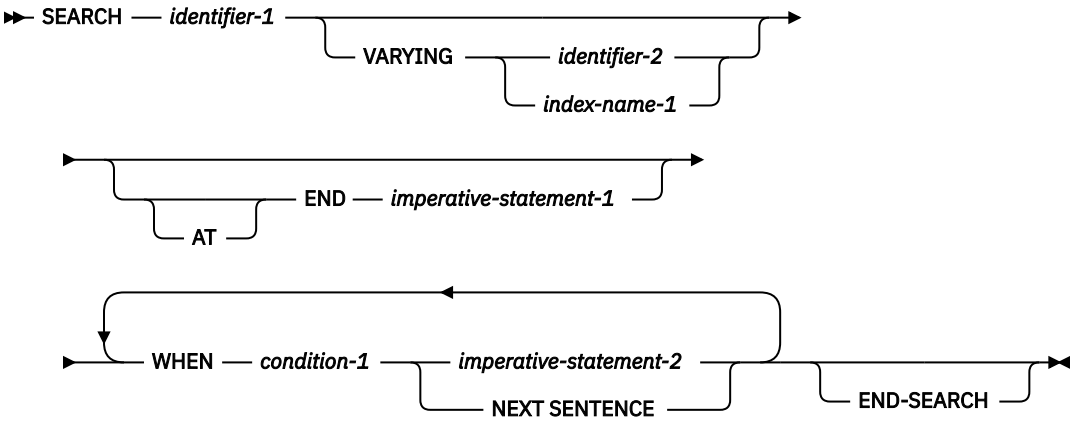

Format 2: SEARCH statement for binary search

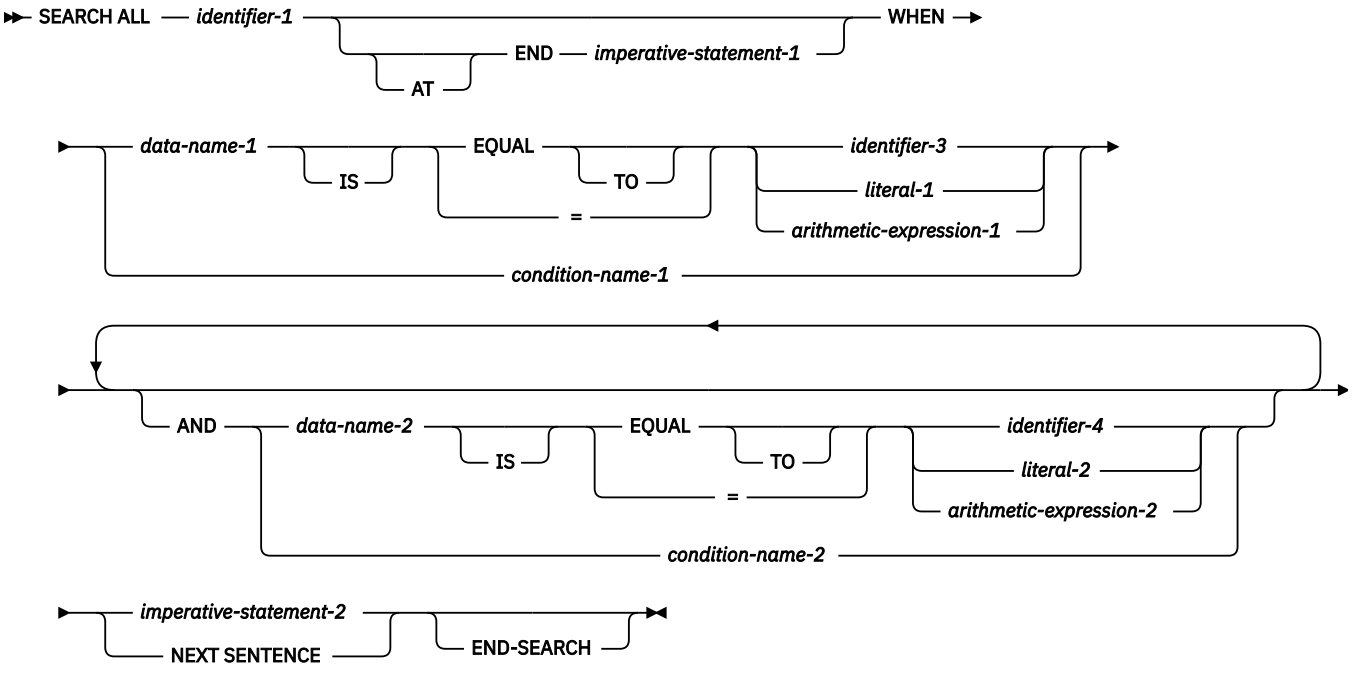

Use format 1 (serial search) when the table that you want to search has not been sorted. Use format 1 to search a sorted table when you want to search serially through the table or you want to control subscripts or indexes.

Use format 2 (binary search) when you want to efficiently search across all occurrences in a table. The table must previously have been sorted, and you can sort the table with the format 2 SORT statement.

AT END and WHEN phrases

After *imperative-statement-1* or *imperative-statement-2* is executed, control passes to the end of the SEARCH statement, unless *imperative-statement-1* or *imperative-statement-2* ends with a GO TO statement.

The function of the AT END phrase is the same for a serial search and a binary search.

NEXT SENTENCE

NEXT SENTENCE transfers control to the first statement following the closest separator period.

When NEXT SENTENCE is specified with END-SEARCH, control does not pass to the statement following the END-SEARCH. Instead, control passes to the statement after the closest following period.

For the format-2 SEARCH ALL statement, neither *imperative-statement-2* nor NEXT SENTENCE is required. Without them, the SEARCH statement sets the index to the value in the table that matched the condition.

The function of the NEXT SENTENCE phrase is the same for a serial search and a binary search.

END-SEARCH phrase

This explicit scope terminator delimits the scope of the SEARCH statement. END-SEARCH permits a conditional SEARCH statement to be nested in another conditional statement.

For more information, see "Delimited scope statements" on page 266.

The function of END-SEARCH is the same for a serial search and a binary search.

Serial search

The topic provides information of using the SEARCH statement for serial search.

***identifier-1* (serial search)**

identifier-1 identifies the table that is to be searched. *identifier-1* references all occurrences within that table.

The data description entry for *identifier-1* must contain an OCCURS clause.

The data description entry for *identifier-1* should contain an OCCURS clause with the INDEXED BY phrase, but a table can be searched using an index defined for an appropriately described different table.

identifier-1 can reference a data item that is subordinate to a data item that is described with an OCCURS clause (that is, *identifier-1* can be a subordinate table within a multidimensional table). In this case, the data description entries must specify an INDEXED BY phrase for each dimension of the table.

identifier-1 must not be subscripted or reference-modified.

AT END

The condition that exists when the search operation terminates without satisfying the condition specified in any of the associated WHEN phrases.

Before executing a serial search, you must set the value of the first (or only) index associated with *identifier-1* (the search index) to indicate the starting occurrence for the search.

Before using a serial search on a multidimensional table, you must also set the value of the index for each superordinate dimension.

The SEARCH statement modifies only the value in the search index, and, if the VARYING phrase is specified, the value in *index-name-1* or *identifier-2*. Therefore, to search an entire two-dimensional to seven-dimensional table, you must execute a SEARCH statement for each dimension. In the WHEN phrases, you must specify the indexes for all dimensions. Before the execution of each SEARCH statement, you must initialize the associated indexes with SET statements.

The SEARCH statement executes a serial search beginning at the current setting of the search index.

When the search begins, if the value of the index associated with *identifier-1* is not greater than the highest possible occurrence number, the following actions take place:

- The conditions in the WHEN phrase are evaluated in the order in which they are written.
- If none of the conditions is satisfied, the index for *identifier-1* is increased to correspond to the next table element, and step 1 is repeated.
- If upon evaluation one of the WHEN conditions is satisfied, the search is terminated immediately, and the *imperative-statement-2* associated with that condition is executed. The index points to the table element that satisfied the condition. If NEXT SENTENCE is specified, control passes to the statement following the closest period.
- If the end of the table is reached (that is, the value of the incremented index is greater than the highest possible occurrence number) without the WHEN condition being satisfied, the search is terminated.

If, when the search begins, the value of the index-name associated with *identifier-1* is greater than the highest possible occurrence number, the search terminates immediately.

When the search terminates, if the AT END phrase is specified, *imperative-statement-1* is executed. If the AT END phrase is omitted, control passes to the next statement after the SEARCH statement.

Example: multidimensional serial search

The following code fragment shows a search of the inner dimension (table C) in the third occurrence within the superordinate table (table R):

```
     . . .
     Working-storage section.
     1 G.
       2 R occurs 10 indexed by Rindex.
         3 C occurs 10 ascending key X indexed by Cindex.
           4 X pic 99.
     1 Arg pic 99 value 34.
     Procedure division.
     . . .
* To search within occurrence 3 of table R, set its index to 3
* To search table C beginning at occurrence 1, set its index to 1
     Set Rindex to 3
     Set Cindex to 1
* In the SEARCH statement, specify C without indexes
     Search C
* Specify indexes for both dimensions in the WHEN phrase
       when X(Rindex Cindex) = Arg
       display "Found " X(Rindex Cindex)
     End-search
     . . .
```

VARYING phrase

index-name-1

One of the following actions applies:

- If *index-name-1* is an index for *identifier-1*, this index is used for the search. Otherwise, the first (or only) index-name is used.
- If *index-name-1* is an index for another table element, then the first (or only) index-name for *identifier-1* is used for the search; the occurrence number represented by *index-name-1* is increased by the same amount as the search index-name and at the same time.

When the VARYING *index-name-1* phrase is omitted, the first (or only) index-name for *identifier-1* is used for the search.

If indexing is used to search a table without an INDEXED BY phrase, correct results are ensured only if both the table defined with the index and the table defined without the index have table elements of the same length and with the same number of occurrences.

When the object of the VARYING phrase is an index-name for another table element, one serial SEARCH statement steps through two table elements at once.

identifier-2
Must be either an index data item or an elementary integer item. *identifier-2* cannot be a windowed date field. *identifier-2* cannot be subscripted by the first (or only) index-name specified for *identifier-1*. During the search, one of the following actions applies:

- If *identifier-2* is an index data item, then, whenever the search index is increased, the specified index data item is simultaneously increased by the same amount.
- If *identifier-2* is an integer data item, then, whenever the search index is increased, the specified data item is simultaneously increased by 1.

WHEN phrase (serial search)

condition-1
Can be any condition described under "Conditional expressions" on page 240.

The following figure illustrates a format-1 SEARCH operation containing two WHEN phrases.

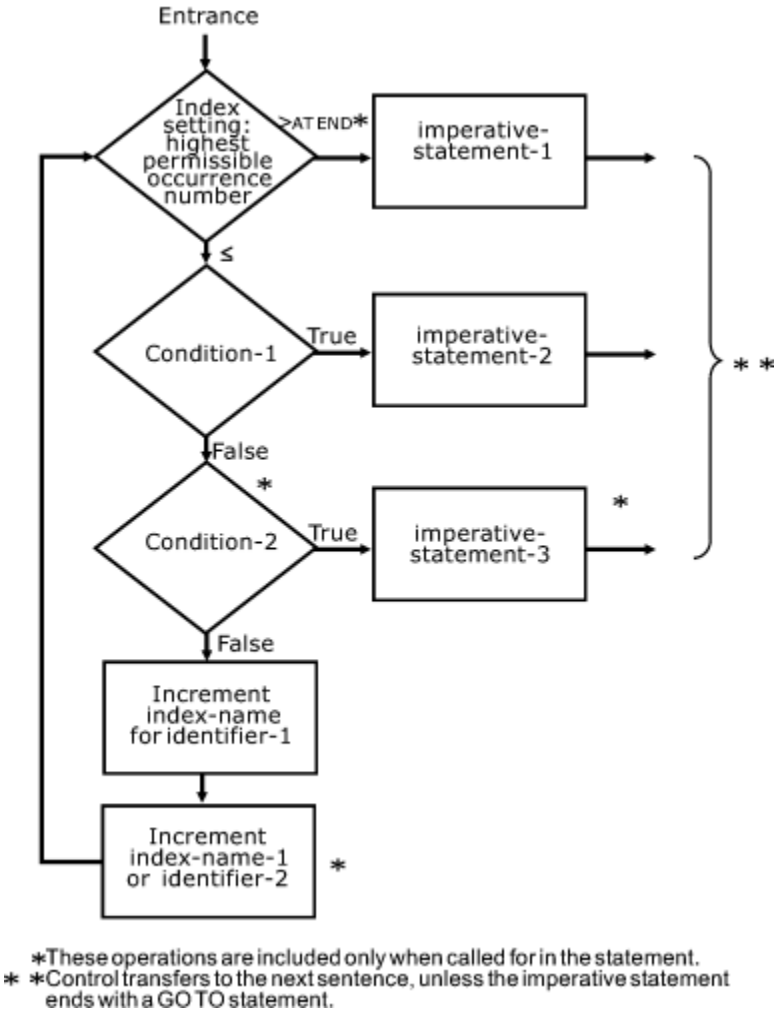

Binary search

The topic provides information of using the SEARCH statement for binary search.

***identifier-1* (binary search)**

identifier-1 identifies the table that is to be searched. *identifier-1* references all occurrences within that table.

The data description entry for *identifier-1* must contain an OCCURS clause with the INDEXED BY and KEY IS phrases.

identifier-1 can reference a data item that is subordinate to a data item that contains an OCCURS clause (that is, *identifier-1* can be a subordinate table within a multidimensional table). In this case, the data description entry must specify an INDEXED BY phrase for each dimension of the table.

identifier-1 must not be subscripted or reference-modified.

AT END

The condition that exists when the search operation terminates without satisfying the conditions specified in the WHEN phrase.

The SEARCH ALL statement executes a binary search. The index associated with *identifier-1* (the search index) need not be initialized by SET statements. The search index is varied during the search operation so that its value is at no time less than the value of the first table element, nor ever greater than the value of the last table element. The index used is always that associated with the first index-name specified in the OCCURS clause.

Before using a binary search on a multidimensional table, you must execute SET statements to set the value of the index for each superordinate dimension.

The SEARCH statement modifies only the value in the search index. Therefore, to search an entire two-dimensional to seven-dimensional table, you must execute a SEARCH statement for each dimension. In the WHEN phrases, you must specify the indexes for all dimensions.

If the search ends without the WHEN condition being satisfied and the AT END phrase is specified, *imperative-statement-1* is executed. If the AT END phrase is omitted, control passes to the next statement after the SEARCH statement.

The results of a SEARCH ALL operation are predictable only when:

- The data in the table is ordered in ASCENDING KEY or DESCENDING KEY order
- The contents of the ASCENDING or DESCENDING keys specified in the WHEN clause provide a unique table reference.

WHEN phrase (binary search)

If a relation condition is specified in the WHEN phrase, the evaluation of the relation is based on the USAGE of the data item referenced by *data-name-1*. The search argument is moved to a temporary data item with the same USAGE as *data-name-1*, and this temporary data item is used for the compare operations associated with the SEARCH. If data-name-1 is a numeric item, the temporary data item is signed or unsigned consistent with the presence or absence of a sign in the data description of data-name-1. If the search argument is signed and data-name-1 is unsigned, the sign will be removed from the search argument before the comparison is done.

If the WHEN phrase cannot be satisfied for any setting of the index within this range, the search is unsuccessful. Control is passed to *imperative-statement-1* of the AT END phrase, when specified, or to the next statement after the SEARCH statement. In either case, the final setting of the index is not predictable.

If the WHEN phrase can be satisfied, control passes to *imperative-statement-2*, if specified, or to the next executable sentence if the NEXT SENTENCE phrase is specified. The index contains the value indicating the occurrence that allowed the WHEN conditions to be satisfied.

After *imperative-statement-2* is executed, control passes to the end of the SEARCH statement, unless *imperative-statement-2* ends with a GO TO statement.

condition-name-1 , condition-name-2
Each condition-name specified must have only a single value, and each must be associated with an ASCENDING KEY or DESCENDING KEY data item for this table element.

data-name-1 , data-name-2
Must specify an ASCENDING KEY or DESCENDING KEY data item in the table element referenced by *identifier-1* and must be subscripted by the first index-name associated with *identifier-1*. Each data-name can be qualified.

data-name-1 must be a valid operand for comparison with *identifier-3*, *literal-1*, or *arithmetic-expression-1* according to the rules of comparison.

data-name-2 must be a valid operand for comparison with *identifier-4*, *literal-2*, or *arithmetic-expression-2* according to the rules of comparison.

data-name-1 and *data-name-2* cannot reference:

- Floating-point data items
- Group items containing variable-occurrence data items
- Windowed date fields

identifier-3 , identifier-4
Must not be an ASCENDING KEY or DESCENDING KEY data item for *identifier-1* or an item that is subscripted by the first index-name for *identifier-1*.

identifier-3 and *identifier-4* cannot be data items defined with any of the usages POINTER, FUNCTION-POINTER, or PROCEDURE-POINTER.

identifier-3 and *identifier-4* cannot be windowed date fields.

If *identifier-3* or *literal-1* is of class national, *data-name-1* must be of class national.

If *identifier-4* or *literal-2* is of class national, *data-name-2* must be of class national.

literal-1 , literal-2
literal-1 or *literal-2* must be a valid operand for comparison with *data-name-1* or *data-name-2*, respectively.

arithmetic-expression
Can be any of the expressions defined under "Arithmetic expressions" on page 235, with the following restriction: Any identifier in *arithmetic-expression* must not be an ASCENDING KEY or DESCENDING KEY data item for *identifier-1* or an item that is subscripted by the first index-name for *identifier-1*.

When an ASCENDING KEY or DESCENDING KEY data item is specified, explicitly or implicitly, in the WHEN phrase, all preceding ASCENDING KEY or DESCENDING KEY data-names for *identifier-1* must also be specified.

Search statement considerations

The topic lists considerations of using the SEARCH statement.

Index data items cannot be used as subscripts, because of the restrictions on direct reference to them.

To ensure correct execution of a SEARCH statement for a variable-length table, make sure the object of the OCCURS DEPENDING ON clause (*data-name-1*) contains a value that specifies the current length of the table.

The scope of a SEARCH statement can be terminated by any of the following items:

- An END-SEARCH phrase at the same level of nesting
- A separator period

- An ELSE or END-IF phrase associated with a previous IF statement

SET statement

The SET statement is used to perform an operation as described in this topic.

The operations are:

- Placing values associated with table elements into indexes associated with index-names
- Incrementing or decrementing an occurrence number
- Setting the status of an external switch to ON or OFF
- Moving data to condition names to make conditions true
- Setting USAGE POINTER data items to a data address
- Setting USAGE PROCEDURE-POINTER data items to an entry address
- Setting USAGE FUNCTION-POINTER data items to an entry address
- Setting and querying the locale categories of the current locale

Index-names are related to a given table through the INDEXED BY phrase of the OCCURS clause; they are not further defined in the program.

When the sending and receiving fields in a SET statement share part of their storage (that is, the operands overlap), the result of the execution of that SET statement is undefined.

Format 1: SET for basic table handling

When this form of the SET statement is executed, the current value of the receiving field is replaced by the value of the sending field (with conversion).

Format 1: SET statement for basic table handling

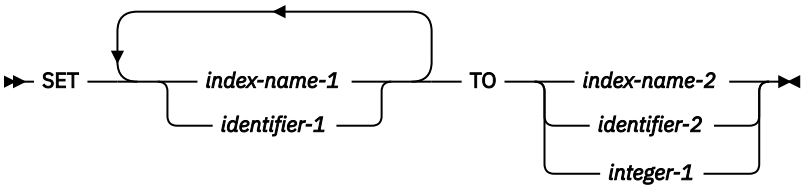

index-name-1
Receiving field.

Must name an index that is specified in the INDEXED BY phrase of an OCCURS clause.

identifier-1
Receiving field.

Must name either an index data item or an elementary numeric integer item. A receiving field cannot be a windowed date field.

index-name-2
Sending field.

Must name an index that is specified in the INDEXED BY phrase of an OCCURS clause. The value of the index before the SET statement is executed must correspond to an occurrence number of its associated table.

identifier-2
Sending field.

Must name either an index data item or an elementary numeric integer item. A sending field cannot be a windowed date field.

integer-1
Sending field.

Must be a positive integer.

The following table shows valid combinations of sending and receiving fields in a format-1 SET statement.

Table 56. ***Sending and receiving fields for format-1 SET statement***

Sending field	**Index-name receiving field**	**Index data item receiving field**	**Integer data item receiving field**
Index-name*	Valid	Valid**	Valid
Index data item*	Valid**	Valid**	Invalid
Integer data item	Valid	Invalid	Invalid
Integer literal	Valid	Invalid	Invalid

*An index-name refers to an index named in the INDEXED BY phrase of an OCCURS clause. An index data item is defined with the USAGE IS INDEX clause.

**No conversion takes place.

Receiving fields are acted upon in the left-to-right order in which they are specified. Any subscripting or indexing associated with *identifier-1* is evaluated immediately before that receiving field is acted upon.

The value used for the sending field is the value at the beginning of SET statement execution.

The value of an index after execution of a SEARCH or PERFORM statement can be undefined; therefore, use a format-1 SET statement to reinitialize such indexes before you attempt other table-handling operations.

If *index-name-2* is for a table that has a subordinate item that contains an OCCURS DEPENDING ON clause, then undefined values can be received into *identifier-1*.

For more information about complex OCCURS DEPENDING ON, see *Complex OCCURS DEPENDING ON* in the *COBOL for Linux on x86 Programming Guide*.

Format 2: SET for adjusting indexes

When this form of the SET statement is executed, the value of the receiving index is increased (UP BY) or decreased (DOWN BY) by a value that corresponds to the value in the sending field.

Format 2: SET statement for adjusting indexes

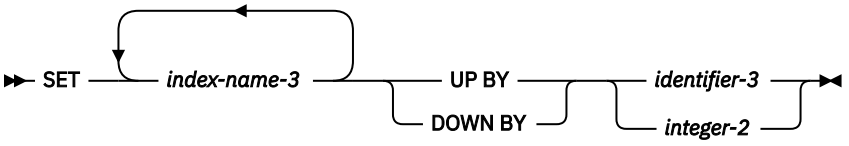

The *receiving field* is an index specified by *index-name-3*. The index value both before and after the SET statement execution must correspond to an occurrence number in an associated table.

The *sending field* can be specified as *identifier-3*, which must be an elementary integer data item, or as *integer-2*, which must be a nonzero integer. *identifier-3* cannot be a windowed date field.

When the format-2 SET statement is executed, the contents of the receiving field are increased (UP BY) or decreased (DOWN BY) by a value that corresponds to the number of occurrences represented by the value of *identifier-3* or *integer-2*. Receiving fields are acted upon in the left-to-right order in which they are specified. The value of the incrementing or decrementing field at the beginning of SET statement execution is used for all receiving fields.

If *index-name-3* is for a table that has a subordinate item that contains an OCCURS DEPENDING ON clause, and if the ODO object is changed before executing a format-2 SET Statement, then *index-name-3* cannot contain a value that corresponds to an occurrence number of its associated table.

For more information about complex OCCURS DEPENDING ON, see *Complex OCCURS DEPENDING ON* in the *COBOL for Linux on x86 Programming Guide*.

Format 3: SET for external switches

When this form of the SET statement is executed, the status of each external switch associated with the specified mnemonic-name is turned ON or OFF.

Format 3: SET statement for external switches

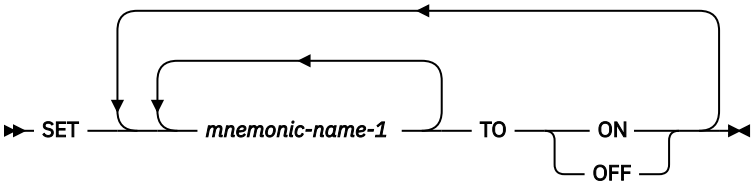

mnemonic-name-1
Must be associated with an external switch, the status of which can be altered.

Format 4: SET for condition-names

When this form of the SET statement is executed, the value associated with a condition-name is placed in its conditional variable according to the rules of the VALUE clause.

Format 4: SET statement for condition-names

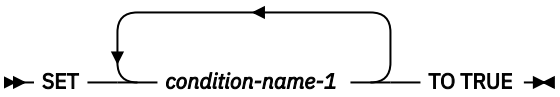

condition-name-1
Must be associated with a conditional variable.

If more than one literal is specified in the VALUE clause of *condition-name-1*, its associated conditional variable is set equal to the first literal.

If multiple condition-names are specified, the results are the same as if a separate SET statement had been written for each condition-name in the same order in which they are specified in the SET statement.

Format 5: SET for USAGE IS POINTER data items

When this form of the SET statement is executed, the current value of the receiving field is replaced by the address value contained in the sending field.

Format 5: SET statement for USAGE IS POINTER data items

```
►► SET ┬──────────────────────────┬──────────────────────────┬ TO ┬──────────────────────────┬──────────────────────────┬──────────────────────────┬──►◄
       │◄──────────────────────────┘                          │    │                          │                          │                          │
       ├──────────── identifier-4 ─┤                          │    ├──────────── identifier-6 ─┤                          │                          │
       └─ ADDRESS OF ── identifier-5 ─┘                          │    └─ ADDRESS OF ── identifier-7 ─┘                          │                          │
                                                                 │                                                             ├──────────── NULL ────────┤
                                                                 │                                                             └──────────── NULLS ───────┘
```

identifier-4
Receiving fields.

Must be defined as USAGE IS POINTER .

ADDRESS OF *identifier-5*
Receiving fields.

identifier-5 must be level-01 or level-77 items defined in the LINKAGE SECTION. The addresses of these items are set to the value of the operand specified in the TO phrase.

identifier-5 must not be reference-modified.

identifier-6
Sending field.

Must be defined as USAGE IS POINTER .

Cannot contain an address within the program's own WORKING-STORAGE SECTION, FILE SECTION, or LOCAL-STORAGE SECTION.

ADDRESS OF *identifier-7*
Sending field.

identifier-7 must name an item of any level except 66 or 88 in the LINKAGE SECTION, the WORKING-STORAGE SECTION, or the LOCAL-STORAGE SECTION. ADDRESS OF *identifier-7* contains the address of the identifier, and not the content of the identifier.

NULL, NULLS
Sending field.

Sets the receiving field to contain the value of an invalid address.

The following table shows valid combinations of sending and receiving fields in a format-5 SET statement.

Table 57. ***Sending and receiving fields for format-5 SET statement***

Sending field	USAGE IS POINTER receiving field	ADDRESS OF receiving field	NULL/NULLS receiving field
USAGE IS POINTER	Valid	Valid	Invalid
ADDRESS OF	Valid	Valid	Invalid
NULL/NULLS	Valid	Valid	Invalid

Format 6: SET for procedure-pointer and function-pointer data items

When this format of the SET statement is executed, the current value of the receiving field is replaced by the address value specified by the sending field.

At run time, function-pointers and procedure-pointers can reference the address of the primary entry point of a COBOL program, an alternate entry point in a COBOL program, or an entry point in a non-COBOL program; or they can be NULL.

COBOL function-pointers are more easily used than procedure-pointers for interoperation with C functions.

Format 6: SET statement for procedure-pointers and function-pointers

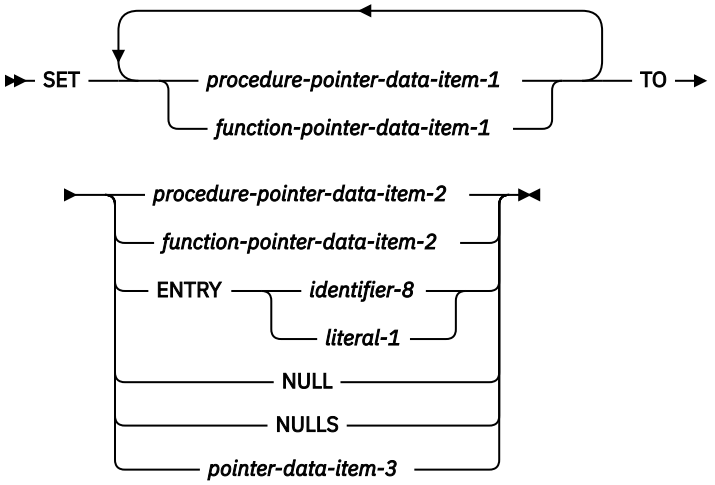

procedure-pointer-data-item-1 , procedure-pointer-data-item-2
Must be described as USAGE IS PROCEDURE-POINTER. *procedure-pointer-data-item-1* is a receiving field; *procedure-pointer-data-item-2* is a sending field.

function-pointer-data-item-1 , function-pointer-data-item-2
Must be described as USAGE IS FUNCTION-POINTER. *function-pointer-data-item-1* is a receiving field; *function-pointer-data-item-2* is a sending field.

identifier-8
Must be defined as an alphabetic or alphanumeric item such that the value can be a program name. For more information, see Chapter 12, “PROGRAM-ID paragraph,” on page 87. For entry points in non-COBOL programs, *identifier-8* can contain the characters @, #, and, $.

literal-1
Must be alphanumeric and must conform to the rules for formation of program-names. For details on formation rules, see the discussion of program-name under Chapter 12, “PROGRAM-ID paragraph,” on page 87.

identifier-8 or *literal-1* must refer to one of the following types of entry points:

- The primary entry point of a COBOL program as defined by the PROGRAM-ID paragraph. The PROGRAM-ID must reference the outermost program of a compilation unit; it must not reference a nested program.
- An alternate entry point of a COBOL program as defined by a COBOL ENTRY statement.
- An entry point in a non-COBOL program.

The program-name referenced by the SET ... TO ENTRY statement can be affected by the PGMNAME compiler option. For details, see *PGMNAME* in the *COBOL for Linux on x86 Programming Guide*.

NULL, NULLS
Sets the receiving field to contain the value of an invalid address.

pointer-data-item-3
Must be defined with USAGE POINTER. You must set *pointer-data-item-3* in a non-COBOL program to point to a valid program entry point.

Example of COBOL/C interoperability

The following example demonstrates a COBOL CALL to a C function that returns a function-pointer to a service, followed by a COBOL CALL to the service:

```
IDENTIFICATION DIVISION.
PROGRAM-ID DEMO.
DATA DIVISION.
WORKING-STORAGE SECTION.
01 FP USAGE FUNCTION-POINTER.
PROCEDURE DIVISION.
    CALL "c-function" RETURNING FP.
    CALL FP.
```

Format 7: SET for USAGE OBJECT REFERENCE data items

This format is not currently supported.

Format 8: SET for length of dynamic-length elementary items

This format is not currently supported.

Format 9: SET for adjusting pointers

When this format of the SET statement is executed, the address contained in pointer-data-item is increased (UP BY) or decreased (DOWN BY) by a value that corresponds to the value in the sending field.

Format 9: SET statement for adjusting pointers

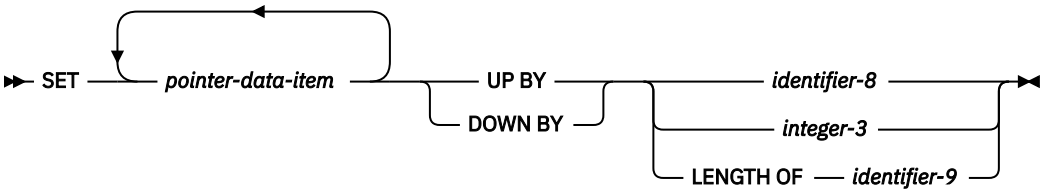

pointer-data-item
The receiving field must be an elementary data item with USAGE IS POINTER.

identifier-8
This sending field must be an elementary integer data-item.

identifier-8 cannot be a floating-point data item.

integer-3
This sending field must be an integer.

identifier-9
For more information on the rules for *identifier-9*, see “LENGTH OF” on page 20.

Format 10: SET for locale categories

This format of the SET statement allows you to set and query the locale categories of the current locale.

A **locale** is a system object containing language and cultural information. For example, a locale contains the appropriate format for a date or time in a particular region of the world. The information in a locale is divided into **locale categories**. For example, locale category LC_TIME contains information about date and time formats. For each run unit there is a DEFAULT locale, a current locale, and from zero to many

specific locales. The current locale is altered by setting some or all of its locale categories to the DEFAULT or a specific locale. The name of the specific locale to which a locale category (of the current locale) was set can be placed into an identifier. The contents of a locale category can be changed by setting the locale category from:

- The system default
- A locale defined in an alphanumeric elementary data item
- The mnemonic-name specified in the SPECIAL-NAMES paragraph.

Each locale category specified remains in effect for the duration of the run unit or until another SET statement specifying the category is processed.

Format 10: SET statement for locale categories

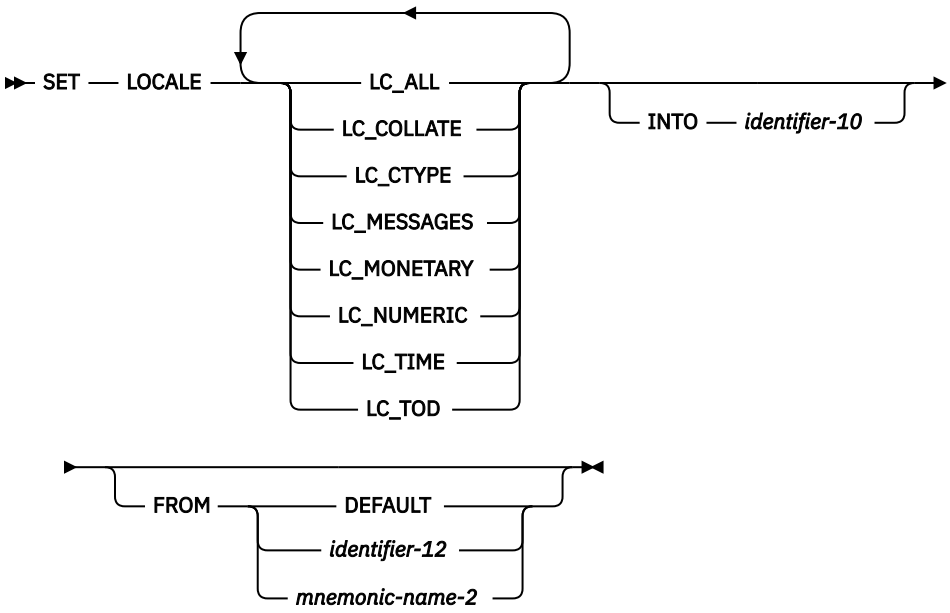

LC_ALL
Locale categories LC_COLLATE, LC_CTYPE, LC_MESSAGES, LC_MONETARY, LC_NUMERIC, LC_TIME, and LC_TOD, as well as any other categories included in the locale.

LC_COLLATE
The locale category that defines collation sequence.

LC_CTYPE
The locale category that defines character classification and character type.

LC_MESSAGES
The locale category that defines formatting of informative and diagnostic messages, and interactive responses.

LC_MONETARY
The locale category that defines monetary formatting.

LC_NUMERIC
The locale category that defines numeric formatting.

LC_TIME
Thelocale category that defines date and time formatting.

LC_TOD
The locale category that defines definitions of time zone differences, time zone names, and Daylight Saving Time start and end points.

identifier-10
The value of *identifier-10* references a locale-category. *identifier-10* must be an elementary alphanumeric data item. If the INTO phrase is specified, the identification of the current locale for the specified category is stored in the data item referenced by *identifier-10*. The INTO phrase is processed before the FROM phrase, using the rules of the MOVE statement for an alphanumeric-to-alphanumeric move.

DEFAULT
Sets the locale category to the current default. The default locale exists at the time a run unit is activated, and remains the default for the duration of the run unit. The default locale also becomes the current locale at the time a run unit is activated, and remains the current locale until it is switched using Format 10 of the SET statement.

identifier-12
The value of *identifier-10* references a locale-category. *identifier-12* must reference an elementary alphanumeric data item. If the locale specified in *identifier-12* is not available, an operating system escape message is issued. If the FROM phrase is specified, the current locale for the specified category is set to the content of the data item referenced by *identifier-12*. The identification of the current locale is stored using the rules of the MOVE statement for an alphanumeric-to-alphanumeric move.

mnemonic-name-2
If the locale specified in *mnemonic-name-2* is not available, an operating system escape message is issued. If the FROM phrase is specified, the current locale for the specified category is set to the locale category identified by *mnemonic-name-2*.

SORT statement

The SORT statement causes a set of records or table elements to be arranged in a user-specified sequence.

For sorting files, the SORT statement accepts records from one or more files, sorts them according to the specified keys, and makes the sorted records available either through an output procedure or in an output file.

For sorting tables, the SORT statement sorts table elements according to specified table keys.

Format

```
SORT — file-name-1 →
  ON ASCENDING / DESCENDING KEY data-name-1
  WITH DUPLICATES IN ORDER
  COLLATING SEQUENCE IS alphabet-name-1
  USING file-name-2
  INPUT PROCEDURE IS procedure-name-1 THROUGH / THRU procedure-name-2
  GIVING file-name-3
  OUTPUT PROCEDURE IS procedure-name-3 THROUGH / THRU procedure-name-4
```

Format 1 SORT statements can appear anywhere in the PROCEDURE DIVISION except in the declarative portion. See also “MERGE statement” on page 325.

Format 2: Table SORT statement

```
►►─ SORT ── data-name-2 ──►
   ►──┬──────────────────────────────────────────────────────────────────────►◄
      │   ┌──────────────────────────────────────────────────────────────────┐
      │   │                                                                  │
      │   │   ┌──────────────────────────────────────────────────────────┐   │
      │   │   │                                                          │   │
      │   │   │   ┌──┬──ASCENDING──┬──┬──KEY──┬──┬──data-name-1──┬──┬──┐   │
      │   │   │   │  │             │  │       │  │               │  │  │   │
      │   │   │   │  └──ON─────────┘  └───────┘  └───────────────┘  │  │   │
      │   │   │   │  ┌──DESCENDING────┘                             │  │   │
      │   │   │   │  │                                              │  │   │
      │   │   │   │  │                                              │  │   │
      │   │   │   │  │                                              
```

- If *file-name-1* contains variable-length records, all of the KEY data-items must be contained within the first *n* character positions of the record, where *n* equals the minimum records size specified for *file-name-1*.
- KEY data items must not contain an OCCURS clause or be subordinate to an item that contains an OCCURS clause.
- KEY data items cannot be:
  - Variably located
  - Group items that contain variable-occurrence data items
  - Windowed date fields
  - Category numeric described with usage NATIONAL (national decimal item)
  - Category external floating-point described with usage NATIONAL (national floating-point item)
  - Category DBCS
- KEY data items can be qualified.
- KEY data items can belong to any of the following data categories:
  - Alphabetic, alphanumeric, alphanumeric-edited
  - Numeric (except numeric with usage NATIONAL)
  - Numeric-edited (with usage DISPLAY or NATIONAL)
  - Internal floating-point or display floating-point
  - National or national-edited when the NCOLLSEQ(BINARY) compiler option is in effect. Binary collating sequence is applied to national keys.

If *file-name-3* references an indexed file whose prime record key is not a *record-key-name*, the first specification of *data-name-1* must be associated with an ASCENDING phrase and the data item referenced by that *data-name-1* must occupy the same character positions in this record as the data item associated with the prime record key for that file.

If *file-name-3* references an indexed file whose prime record key is a *record-key-name*, you must specify a corresponding *data-name-1* for each data name in the SOURCE phrase of the *record-key-name*. Each *data-name-1* must be associated with an ASCENDING phrase, and each *data-name-1* must occupy the same character positions as the corresponding data name in the SOURCE phrase.

For more information about *record-key-name*, see "FILE-CONTROL paragraph" on page 107.

The direction of the sorting operation depends on the specification of the ASCENDING or DESCENDING keywords as follows:

- When ASCENDING is specified, the sequence is from the lowest key value to the highest key value.
- When DESCENDING is specified, the sequence is from the highest key value to the lowest.
- If the KEY data item is alphabetic, alphanumeric, alphanumeric-edited, or numeric-edited, the sequence of key values depends on the collating sequence used (see "COLLATING SEQUENCE phrase (both formats)" on page 382).
- If the KEY data item is described with usage NATIONAL, the sequence of the KEY values is based on the binary values of the national characters.
- If the KEY is a display floating-point item, the compiler treats the data item as character data of the same size as the key, rather than as numeric data. The sequence in which the records are sorted depends on the collating sequence used.
- If the KEY data item is internal floating point, the sequence of key values will be in numeric order.
- When the COLLATING SEQUENCE phrase is not specified, the key comparisons are performed according to the rules for comparison of operands in a relation condition. See "General relation conditions" on page 244.
- When the COLLATING SEQUENCE phrase is specified, the indicated collating sequence is used for key data items of alphabetic, alphanumeric, alphanumeric-edited, external floating-point, and numeric-

edited categories. For all other key data items, the comparisons are performed according to the rules for comparison of operands in a relation condition.

ASCENDING KEY and DESCENDING KEY phrases (format 2)

This phrase specifies that table elements are to be processed in ascending or descending sequence, based on the specified phrase and sort keys.

data-name-1

Specifies a KEY data name that is subject to the following rules:

- The data item that is identified by a key data-name must be the same as, or subordinate to, the data item that is referenced by *data-name-2*.
- KEY data items can be qualified.
- KEY data items can belong to any of the following data categories:
  - Alphabetic, alphanumeric, alphanumeric-edited
  - Numeric (except numeric with usage NATIONAL)
  - Numeric-edited (with usage DISPLAY or NATIONAL)
  - Internal floating-point or display floating-point
  - National or national-edited
- KEY data items cannot be:
  - Variably located
  - Group items that contain variable-occurrence data items
  - Category numeric that is described with usage NATIONAL (national decimal item)
  - Category external floating-point that is described with usage NATIONAL (national floating-point item)
  - Category DBCS
  - Class pointer
  - USAGE POINTER, USAGE PROCEDURE-POINTER, or USAGE FUNCTION-POINTER
  - Subscripted
- If the data item that is identified by a KEY data-name is subordinate to *data-name-2*, the following rules apply:
  - The data item cannot be described with an OCCURS clause.
  - The data item cannot be subordinate to an entry that is also subordinate to *data-name-2* and that contains an OCCURS clause.

The KEY phrase can be omitted only if the description of the table that is referenced by *data-name-2* contains a KEY phrase.

The words ASCENDING and DESCENDING are transitive across all occurrences of *data-name-1* until another word ASCENDING or DESCENDING is encountered.

The data items that are referenced by *data-name-1* are key data items, and these data items determine the order in which the sorted table elements are stored. The order of significance of the keys is the order in which data items are specified in the SORT statement, without regard to the association with ASCENDING or DESCENDING phrases.

The SORT statement sorts the table that is referenced by *data-name-2* and presents the sorted table in *data-name-2*. The sorting order is determined by either the ASCENDING and DESCENDING phrases (if specified), or by the KEY phrase that is associated with *data-name-2*.

The direction of the sorting operation depends on the specification of the ASCENDING or DESCENDING keywords:

- When ASCENDING is specified, the sequence is from the lowest key value to the highest one.

- When DESCENDING is specified, the sequence is from the highest key value to the lowest one.
- If the KEY data item is described with usage NATIONAL, the sequence of the KEY values is based on the binary values of the national characters.
- If the KEY data item is internal floating-point, the sequence of key values is in the numeric order.
- When the COLLATING SEQUENCE phrase is not specified, the EBCDIC sequence is used for key data items of alphabetic, alphanumeric, alphanumeric-edited, external floating-point, and numeric-edited categories. For all the other key data items, the comparisons are performed according to the rules for comparison of operands in a relation condition.
- When the COLLATING SEQUENCE phrase is specified, the indicated collating sequence is used for key data items of alphabetic, alphanumeric, alphanumeric-edited, external floating-point, and numeric-edited categories. For all the other key data items, the comparisons are performed according to the rules for comparison of operands in a relation condition.

To determine the relative order in which table elements are stored, the contents of corresponding key data items are compared according to the rules for comparison of operands in a relation condition. The sorting starts with the most significant key data item with the following rules:

- If the contents of the corresponding key data items are not equal and the key is associated with the ASCENDING phrase, the table element that contains the key data item with the lower value has the lower occurrence number.
- If the contents of the corresponding key data items are not equal and the key is associated with the DESCENDING phrase, the table element that contains the key data item with the higher value has the lower occurrence number.
- If the contents of the corresponding key data items are equal, the determination is based on the contents of the next most significant key data item.

If the KEY phrase is not specified, the sequence is determined by the KEY phrase in the data description entry of the table that is referenced by *data-name-2*.

If the KEY phrase is specified, it overrides any KEY phrase specified in the data description entry of the table that is referenced by *data-name-2*.

If *data-name-1* is omitted, the data item that is referenced by *data-name-2* is the key data item.

DUPLICATES phrase (format 1)

If the DUPLICATES phrase is specified, and the contents of all the key elements associated with one record are equal to the corresponding key elements in one or more other records, the order of return of these records is as follows:

- The order of the associated input files as specified in the SORT statement. Within a given file the order is that in which the records are accessed from that file.
- The order in which these records are released by an input procedure, when an input procedure is specified.

If the DUPLICATES phrase is not specified, the order of these records is undefined.

DUPLICATES phrase (format 2)

When both of the following conditions are met, the contents of table elements are in the relative order that is the same as the order before sorting operation:

- The DUPLICATES phrase is specified.
- The contents of all the key data items that are associated with one table element are equal to the contents of corresponding key data items that are associated with one or more other table elements.

If the DUPLICATES phrase is not specified and the second condition exists, the relative order of the contents of these table elements is undefined.

COLLATING SEQUENCE phrase (both formats)

This phrase specifies the collating sequence to be used in alphanumeric comparisons for the KEY data items in this sorting operation.

The COLLATING SEQUENCE phrase has no effect for keys that are not alphabetic or alphanumeric.

The COLLATING SEQUENCE phrase is valid only when a single-byte ASCII code page is in effect.

alphabet-name-1

Must be specified in the ALPHABET clause of the SPECIAL-NAMES paragraph. *alphabet-name-1* can be associated with any one of the ALPHABET clause phrases, with the following results:

STANDARD-1

The collating sequence is based on the character's hex value order.

STANDARD-2

The collating sequence is based on the character's hex value order.

NATIVE

The collating sequence indicated by the locale is selected.

EBCDIC

The EBCDIC collating sequence is used for all alphanumeric comparisons. (The EBCDIC collating sequence is shown in "EBCDIC and ASCII collating sequences" on page 610.)

literal

The collating sequence established by the specification of literals in the alphabet-name clause is used for all alphanumeric comparisons.

When the COLLATING SEQUENCE phrase is omitted, the PROGRAM COLLATING SEQUENCE clause (if specified) in the OBJECT-COMPUTER paragraph specifies the collating sequence to be used. When both the COLLATING SEQUENCE phrase and the PROGRAM COLLATING SEQUENCE clause are omitted, the collating sequence indicated by the COLLSEQ compiler option is used.

USING phrase

***file-name-2* , ...**

The input files.

When the USING phrase is specified, all the records in *file-name-2*, ..., (that is, the input files) are transferred automatically to *file-name-1*. At the time the SORT statement is executed, these files must not be open. The compiler opens, reads, makes records available, and closes these files automatically. If EXCEPTION/ERROR procedures are specified for these files, the compiler makes the necessary linkage to these procedures.

All input files must be described in FD entries in the DATA DIVISION.

If the USING phrase is specified and if *file-name-1* contains variable-length records, the size of the records contained in the input files (*file-name-2*, ...) must be neither less than the smallest record nor greater than the largest record described for *file-name-1*. If *file-name-1* contains fixed-length records, the size of the records contained in the input files must not be greater than the largest record described for *file-name-1*. For more information, see *Describing the input to sorting or merging* in the *COBOL for Linux on x86 Programming Guide*.

INPUT PROCEDURE phrase

This phrase specifies the name of a procedure that is to select or modify input records before the sorting operation begins.

procedure-name-1
Specifies the first (or only) section or paragraph in the input procedure.

procedure-name-2
Identifies the last section or paragraph of the input procedure.

The input procedure can consist of any procedure needed to select, modify, or copy the records that are made available one at a time by the RELEASE statement to the file referenced by *file-name-1*. The range includes all statements that are executed as the result of a transfer of control by CALL, EXIT, GO TO, PERFORM, and XML PARSE statements in the range of the input procedure, as well as all statements in declarative procedures that are executed as a result of the execution of statements in the range of the input procedure. The range of the input procedure must not cause the execution of any MERGE, RETURN, or format 1 SORT statement.

If an input procedure is specified, control is passed to the input procedure before the file referenced by *file-name-1* is sequenced by the SORT statement. The compiler inserts a return mechanism at the end of the last statement in the input procedure. When control passes the last statement in the input procedure, the records that have been released to the file referenced by *file-name-1* are sorted.

GIVING phrase

***file-name-3* , ...**
The output files.

When the GIVING phrase is specified, all the sorted records in *file-name-1* are automatically transferred to the output files (*file-name-3*, ...).

All output files must be described in FD entries in the DATA DIVISION.

If the output files (*file-name-3*, ...) contain variable-length records, the size of the records contained in *file-name-1* must be neither less than the smallest record nor greater than the largest record described for the output files. If the output files contain fixed-length records, the size of the records contained in *file-name-1* must not be greater than the largest record described for the output files. For more information, see *Describing the output from sorting or merging* in the *COBOL for Linux on x86 Programming Guide*.

At the time the SORT statement is executed, the output files (*file-name-3*, ...) must not be open. For each of the output files, the execution of the SORT statement causes the following actions to be taken:

- The processing of the file is initiated. The initiation is performed as if an OPEN statement with the OUTPUT phrase had been executed.
- The sorted logical records are returned and written onto the file. Each record is written as if a WRITE statement without any optional phrases had been executed.

  For a relative file, the relative key data item for the first record returned contains the value '1'; for the second record returned, the value '2'. After execution of the SORT statement, the content of the relative key data item indicates the last record returned to the file.
- The processing of the file is terminated. The termination is performed as if a CLOSE statement without optional phrases had been executed.

These implicit functions are performed such that any associated USE AFTER EXCEPTION/ERROR procedures are executed; however, the execution of such a USE procedure must not cause the execution of any statement manipulating the file referenced by, or accessing the record area associated with, *file-name-3*. On the first attempt to write beyond the externally defined boundaries of the file, any USE AFTER STANDARD EXCEPTION/ERROR procedure specified for the file is executed. If control is returned from that USE procedure or if no such USE procedure is specified, the processing of the file is terminated.

OUTPUT PROCEDURE phrase

This phrase specifies the name of a procedure that is to select or modify output records from the sorting operation.

procedure-name-3
Specifies the first (or only) section or paragraph in the output procedure.

procedure-name-4
Identifies the last section or paragraph of the output procedure.

The output procedure can consist of any procedure needed to select, modify, or copy the records that are made available one at a time by the RETURN statement in sorted order from the file referenced by *file-name-1*. The range includes all statements that are executed as the result of a transfer of control by CALL, EXIT, GO TO, PERFORM, and XML PARSE statements in the range of the output procedure. The range also includes all statements in declarative procedures that are executed as a result of the execution of statements in the range of the output procedure. The range of the output procedure must not cause the execution of any MERGE, RELEASE, or format 1 SORT statement.

If an output procedure is specified, control passes to it after the file referenced by *file-name-1* has been sequenced by the SORT statement. The compiler inserts a return mechanism at the end of the last statement in the output procedure and when control passes the last statement in the output procedure, the return mechanism provides the termination of the sort and then passes control to the next executable statement after the SORT statement. Before entering the output procedure, the sort procedure reaches a point at which it can select the next record in sorted order when requested. The RETURN statements in the output procedure are the requests for the next record.

The INPUT PROCEDURE and OUTPUT PROCEDURE phrases are similar to those for a basic PERFORM statement. For example, if you name a procedure in an output procedure, that procedure is executed during the sorting operation just as if it were named in a PERFORM statement. As with the PERFORM statement, execution of the procedure is terminated after the last statement completes execution. The last statement in an input or output procedure can be the EXIT statement (see "EXIT statement" on page 307).

SORT special registers

The special registers, SORT-CORE-SIZE, SORT-MESSAGE, and SORT-MODE-SIZE, are equivalent to option control statement keywords in the sort control file. You define the sort control file with the SORT-CONTROL special register.

Usage note: If you use a sort control file to specify control statements, the values specified in the sort control file take precedence over those in the special register.

SORT-MESSAGE special register
See "SORT-MESSAGE" on page 24.

SORT-CORE-SIZE special register
See "SORT-CORE-SIZE" on page 23.

SORT-FILE-SIZE special register
See "SORT-FILE-SIZE" on page 23.

SORT-MODE-SIZE special register
See "SORT-MODE-SIZE" on page 24.

SORT-CONTROL special register
See "SORT-CONTROL" on page 23.

SORT-RETURN special register
See "SORT-RETURN" on page 24.

START statement

The START statement provides a means of positioning within an indexed or relative file for subsequent sequential record retrieval.

When the START statement is executed, the associated indexed or relative file must be open in either INPUT or I-O mode.

Format

```
▶▶─ START ─ file-name-1 ─▶
   ├─ KEY ─┬─ IS ─┬─┬─ EQUAL ─┬─ TO ─┬─┬─ data-name-1 ─┬─ data-name-1 ─┬─┤
   │       │      │ │         │      │ │               │ record-key-name-1 │
   │       │      │ │ =                │ │
   │       │      │ │ LESS ─┬─ THAN ─┬ │
   │       │      │ │ <                │ │
   │       │      │ │ GREATER ─┬─ THAN ─┬ │
   │       │      │ │ >                │ │
   │       │      │ │ NOT LESS ─┬─ THAN ─┬ │
   │       │      │ │ NOT <            │ │
   │       │      │ │ NOT GREATER ─┬─ THAN ─┬ │
   │       │      │ │ NOT >            │ │
   │       │      │ │ LESS ─┬─ THAN ─┬─ OR EQUAL ─┬─ TO ─┬ │
   │       │      │ │ <=               │ │
   │       │      │ │ GREATER ─┬─ THAN ─┬─ OR EQUAL ─┬─ TO ─┬ │
   │       │      │ │ >=               │ │
   ├─ INVALID ─┬─ KEY ─┬─ imperative-statement-1 ─┤
   │           │        │
   ├─ NOT INVALID ─┬─ KEY ─┬─ imperative-statement-2 ─┬─ END-START ─┤
   │               │        │
```

Restriction: *record-key-name* is supported for STL file system only.

file-name-1

Must name a file with sequential or dynamic access. *file-name-1* must be defined in an FD entry in the DATA DIVISION and must not name a sort file.

KEY phrase

record-key-name-1 must be specified with the SOURCE phrase in the RECORD KEY clause or in the ALTERNATE RECORD KEY clause in the file control entry for *file-name-1*. *data-name-1* or *record-key-name-1* can be qualified. *data-name-1* cannot be subscripted.

When the KEY phrase is specified, the file position indicator is positioned at the logical record in the file whose key field satisfies the comparison.

When the KEY phrase is not specified, KEY IS EQUAL (to the prime record key) is implied.

If you specify the KEY to be 'less than' or 'less than or equal to' the data item, the file position indicator is positioned to the last logical record that currently exists in the file that satisfies the comparison.

For an indexed file, if the key that satisfies the comparison has duplicate entries, the file position indicator is positioned to the last of these entries.

data-name-1
Can be qualified; it cannot be subscripted.

When the START statement is executed, a comparison is made between the current value in the key data-name and the corresponding key field in the file's index.

If the FILE STATUS clause is specified in the file-control entry, the associated file status key is updated when the START statement is executed (See “File status key” on page 272).

INVALID KEY phrases

If the comparison is not satisfied by any record in the file, an invalid key condition exists; the position of the file position indicator is undefined, and (if specified) the INVALID KEY imperative-statement is executed. (See “INTO and FROM phrases” on page 277 under "Common processing facilities".)

Both the INVALID KEY phrase and an applicable EXCEPTION/ERROR procedure can be omitted.

END-START phrase

This explicit scope terminator serves to delimit the scope of the START statement. END-START permits a conditional START statement to be nested in another conditional statement. END-START can also be used with an imperative START statement.

For more information, see “Delimited scope statements” on page 266.

Indexed files

When the KEY phrase is specified, the key data item used for the comparison is *data-name-1* or *record-key-name-1*.

When the KEY phrase is not specified, the key data item used for the EQUAL TO comparison is the prime record key.

When START statement execution is successful, the RECORD KEY or ALTERNATE RECORD KEY with which *data-name-1* or *record-key-name-1* is associated becomes the key of reference for subsequent READ statements.

data-name-1* or *record-key-name-1
Can be any of the following items:

- The prime RECORD KEY.
- Any ALTERNATE RECORD KEY.
- A data item within a record description for a file whose leftmost character position corresponds to the leftmost character position of that record key; it can be qualified. The size of the data item must be less than or equal to the length of the record key for the file.

Regardless of its category, *data-name-1* or *record-key-name-1* is treated as an alphanumeric item for purposes of the comparison operation.

The file position indicator points to the first record in the file whose key field satisfies the comparison. If the operands in the comparison are of unequal lengths, the comparison proceeds as if the longer field were truncated on the right to the length of the shorter field. All other numeric and alphanumeric comparison rules apply, except that the PROGRAM COLLATING SEQUENCE clause, if specified, has no effect.

When START statement execution is successful, the RECORD KEY with which *data-name-1* or *record-key-name-1* is associated becomes the key of reference for subsequent READ statements.

When START statement execution is unsuccessful, the key of reference is undefined.

Relative files

When the KEY phrase is specified, *data-name-1* must specify the RELATIVE KEY.

Whether or not the KEY phrase is specified, the key data item used in the comparison is the RELATIVE KEY data item. Numeric comparison rules apply.

The file position indicator points to the logical record in the file whose key satisfies the specified comparison.

STOP statement

The STOP statement halts execution of the object program either permanently or temporarily.

Format

```
►► STOP ──┬──── RUN ────┬──►◄
          └── literal ──┘
```

literal

Can be a fixed-point numeric literal (signed or unsigned), an alphanumeric literal, or a boolean literal. It can be any figurative constant except ALL *literal*.

When STOP *literal* is specified, the literal is communicated to the operator, and object program execution is suspended. Program execution is resumed only after operator intervention, and continues at the next executable statement in sequence.

The STOP *literal* statement is useful for special situations when operator intervention is needed during program execution; for example, when a special tape or disk must be mounted or a specific daily code must be entered. However, the ACCEPT and DISPLAY statements are preferred when operator intervention is needed.

When STOP RUN is specified, execution is terminated and control is returned to the system. When STOP RUN is not the last or only statement in a sequence of imperative statements within a sentence, the statements following STOP RUN are not executed.

The STOP RUN statement closes *all* files defined in any of the programs in the run unit.

For use of the STOP RUN statement in calling and called programs, see the following table.

Termination statement	Main program	Subprogram
STOP RUN	Returns to the calling program. (Can be the system, which causes the application to end.)	Returns directly to the program that called the main program. (Can be the system, which causes the application to end.)

Note: Under CICS®, if STOP RUN is invoked from a program that was started via an EXEC CICS LINK statement, then STOP RUN behaves as if GOBACK or EXEC CICS RETURN were issued: STOP RUN returns the control to the linking program.

STRING statement

The STRING statement strings together the partial or complete contents of two or more data items or literals into one single data item.

One STRING statement can be written instead of a series of MOVE statements.

Format

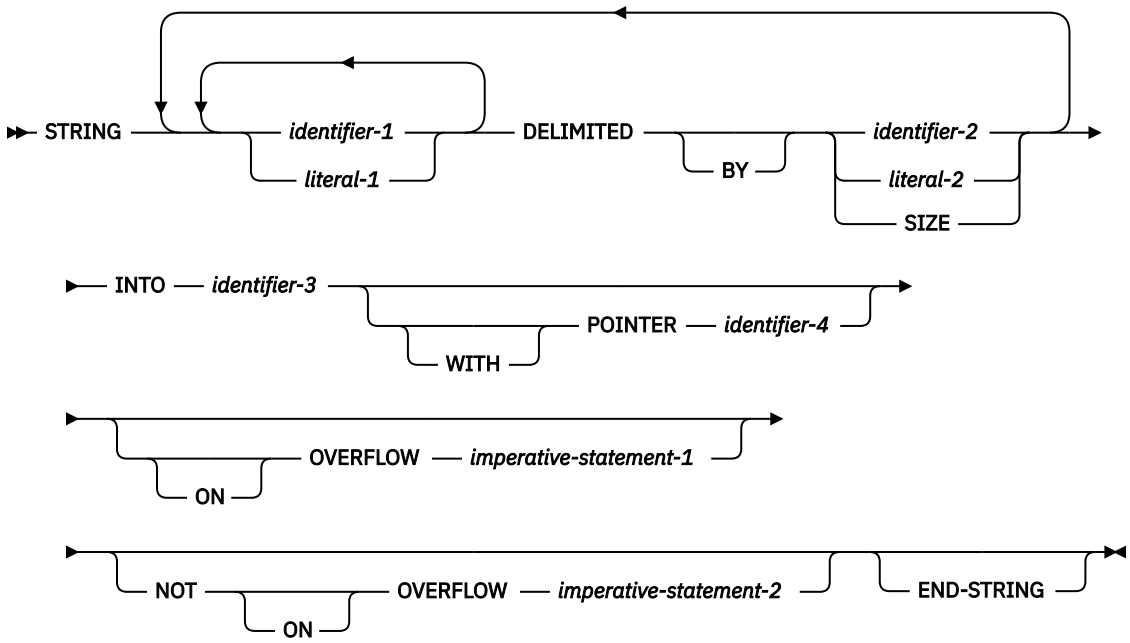

identifier-1*, *literal-1
Represents the *sending fields*.

DELIMITED BY phrase
Sets the limits of the string.

identifier-2*, *literal-2
Are delimiters; that is, characters that delimit the data to be transferred.

SIZE
Transfers the complete sending area.

INTO phrase
Identifies the receiving field.

identifier-3
Represents the *receiving field*.

POINTER phrase
Points to a character position in the receiving field. The pointer field indicates a relative alphanumeric character position, DBCS character position, or national character position when the receiving field is of usage DISPLAY, DISPLAY-1, or NATIONAL, respectively.

identifier-4
Represents the *pointer field*. *identifier-4* must be large enough to contain a value equal to the length of the receiving field plus 1. You must initialize *identifier-4* to a nonzero value before execution of the STRING statement begins.

The following rules apply:

- All identifiers except *identifier-4* must reference data items described explicitly or implicitly as usage DISPLAY, DISPLAY-1, or NATIONAL.
- *literal-1* or *literal-2* must be of category alphanumeric, DBCS, or national and can be any figurative constant that does not begin with the word ALL (except NULL).
- If *identifier-1* or *identifer-2* references a data item of category numeric, each numeric item must be described as an integer without the symbol 'P' in its PICTURE character-string.

- *identifier-3* must not reference a data item of category numeric-edited, alphanumeric-edited, or national-edited; an external floating-point data item of usage DISPLAY, or an external floating-point data item of usage NATIONAL.
- *identifier-3* must not described with the JUSTIFIED clause.
- If *identifier-3* is of usage DISPLAY, *identifier-1* and *identifier-2* must be of usage DISPLAY and all literals must be alphanumeric literals. Any figurative constant can be specified except one that begins with the word ALL. Each figurative constant represents a 1-character alphanumeric literal.
- If *identifier-3* is of usage DISPLAY-1, *identifier-1* and *identifier-2* must be of usage DISPLAY-1 and all literals must be DBCS literals. The only figurative constant that can be specified is SPACE, which represents a 1-character DBCS literal. ALL *DBCS-literal* must not be specified.
- If *identifier-3* is of usage NATIONAL, *identifier-1* and *identifier-2* must be of usage NATIONAL and all literals must be national literals. Any figurative constant can be specified except *symbolic-character* and one that begins with the word ALL. Each figurative constant represents a 1-character national literal.
- If *identifier-1* or *identifier-2* references an elementary data item of usage DISPLAY that is described as category numeric, numeric-edited, or alphanumeric-edited, the item is treated as if it were redefined as category alphanumeric.
- If *identifier-1* or *identifier-2* references an elementary data item of usage NATIONAL that is described as category numeric, numeric-edited, or national-edited item, the item is treated as if it were redefined as category national.
- *identifier-4* must not be described with the symbol P in its PICTURE character-string.
- None of the identifiers in a STRING statement can be a windowed date field.

Evaluation of subscripts, reference modification, variable-lengths, variable locations, and function-identifiers is performed only once, at the beginning of the execution of the STRING statement. Therefore, if *identifier-3* or *identifier-4* is used as a subscript, reference-modifier, or function argument in the STRING statement, or affects the length or location of any of the identifiers in the STRING statement, the values calculated for those subscripts, reference-modifiers, variable lengths, variable locations, and functions are not affected by any results of the STRING statement.

If *identifier-3* and *identifier-4* occupy the same storage area, undefined results will occur, even if the identifiers are defined by the same data description entry.

If *identifier-1* or *identifier-2* occupies the same storage area as *identifier-3* or *identifier-4*, undefined results will occur, even if the identifiers are defined by the same data description entry.

See "Data flow" on page 390 for details of STRING statement processing.

ON OVERFLOW phrases

imperative-statement-1

Executed when the pointer value (explicit or implicit):

- Is less than 1
- Exceeds a value equal to the length of the receiving field

When either of the above conditions occurs, an overflow condition exists, and no more data is transferred. Then the STRING operation is terminated, the NOT ON OVERFLOW phrase, if specified, is ignored, and control is transferred to the end of the STRING statement or, if the ON OVERFLOW phrase is specified, to *imperative-statement-1*.

If control is transferred to *imperative-statement-1*, execution continues according to the rules for each statement specified in *imperative-statement-1*. If a procedure branching or conditional statement that causes explicit transfer of control is executed, control is transferred according to the rules for that statement; otherwise, upon completion of the execution of *imperative-statement-1*, control is transferred to the end of the STRING statement.

If at the time of execution of a STRING statement, conditions that would cause an overflow condition are not encountered, then after completion of the transfer of data, the ON OVERFLOW phrase, if specified, is ignored. Control is then transferred to the end of the STRING statement, or if the NOT ON OVERFLOW phrase is specified, to *imperative-statement-2*.

If control is transferred to *imperative-statement-2*, execution continues according to the rules for each statement specified in *imperative-statement-2*. If a procedure branching or conditional statement that causes explicit transfer of control is executed, control is transferred according to the rules for that statement. Otherwise, upon completion of the execution of *imperative-statement-2*, control is transferred to the end of the STRING statement.

END-STRING phrase

This explicit scope terminator serves to delimit the scope of the STRING statement. END-STRING permits a conditional STRING statement to be nested in another conditional statement. END-STRING can also be used with an imperative STRING statement.

For more information, see "Delimited scope statements" on page 266.

Data flow

When the STRING statement is executed, characters are transferred from the sending fields to the receiving field. The order in which sending fields are processed is the order in which they are specified.

The following rules apply:

- Characters from the sending fields are transferred to the receiving fields in the following manner:
  - For national sending fields, data is transferred using the rules of the MOVE statement for elementary national-to-national moves, except that no space filling takes place.
  - For DBCS sending fields, data is transferred using the rules of the MOVE statement for elementary DBCS-to-DBCS moves, except that no space filling takes place.
  - Otherwise, data is transferred to the receiving fields using the rules of the MOVE statement for elementary alphanumeric-to-alphanumeric moves, except that no space filling takes place (see "MOVE statement" on page 329).
- When DELIMITED BY *identifier-2* or *literal-2* is specified, the contents of each sending item are transferred, character-by-character, beginning with the leftmost character position and continuing until either:
  - A delimiter for this sending field is reached (the delimiter itself is not transferred).
  - The rightmost character of this sending field has been transferred.
- When DELIMITED BY SIZE is specified, each entire sending field is transferred to the receiving field.
- When the receiving field is filled, or when all the sending fields have been processed, the operation is ended.
- When the POINTER phrase is specified, an explicit pointer field is available to the COBOL user to control placement of data in the receiving field. The user must set the explicit pointer's initial value, which must not be less than 1 and not more than the character position count of the receiving field.

  Usage note: The pointer field must be defined as a field large enough to contain a value equal to the length of the receiving field plus 1; this precludes arithmetic overflow when the system updates the pointer at the end of the transfer.
- When the POINTER phrase is not specified, no pointer is available to the user. However, a conceptual implicit pointer with an initial value of 1 is used by the system.
- Conceptually, when the STRING statement is executed, the initial pointer value (explicit or implicit) is the first character position within the receiving field into which data is to be transferred. Beginning at that position, data is then positioned, character-by-character, from left to right. After each character is positioned, the explicit or implicit pointer is increased by 1. The value in the pointer field is changed

only in this manner. At the end of processing, the pointer value always indicates a value equal to one character position beyond the last character transferred into the receiving field.

After STRING statement execution is completed, only that part of the receiving field into which data was transferred is changed. The rest of the receiving field contains the data that was present before this execution of the STRING statement.

Example of the STRING statement

This topic lists an example for the STRING statement.

When the following STRING statement is executed, the results obtained will be like those illustrated in the figure after the statement.

```
STRING ID-1 ID-2 DELIMITED BY ID-3
       ID-4 ID-5 DELIMITED BY SIZE
  INTO ID-7 WITH POINTER ID-8
END-STRING
```

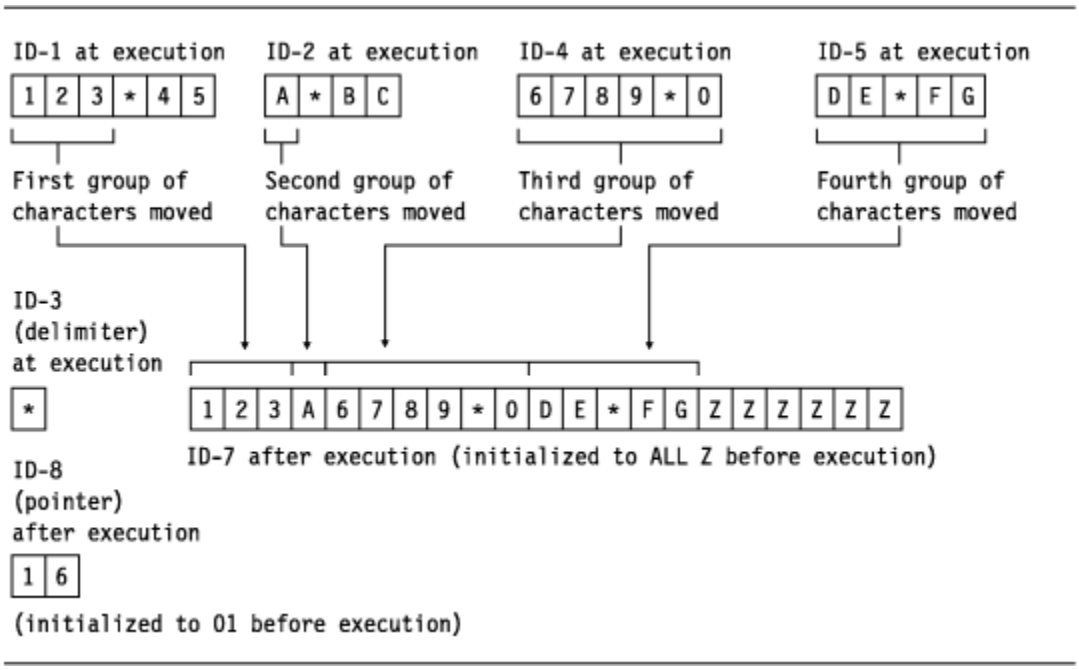

SUBTRACT statement

The SUBTRACT statement subtracts one numeric item, or the sum of two or more numeric items, from one or more numeric items, and stores the result.

Format 1: SUBTRACT statement

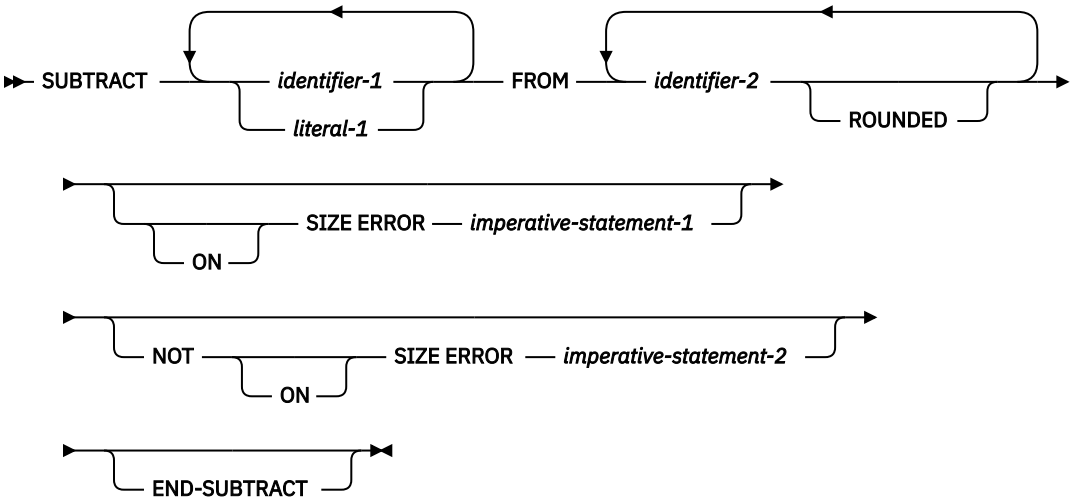

All identifiers or literals preceding the keyword FROM are added together and their sum is subtracted from and stored immediately in *identifier-2*. This process is repeated for each successive occurrence of *identifier-2*, in the left-to-right order in which *identifier-2* is specified.

Format 2: SUBTRACT statement with GIVING phrase

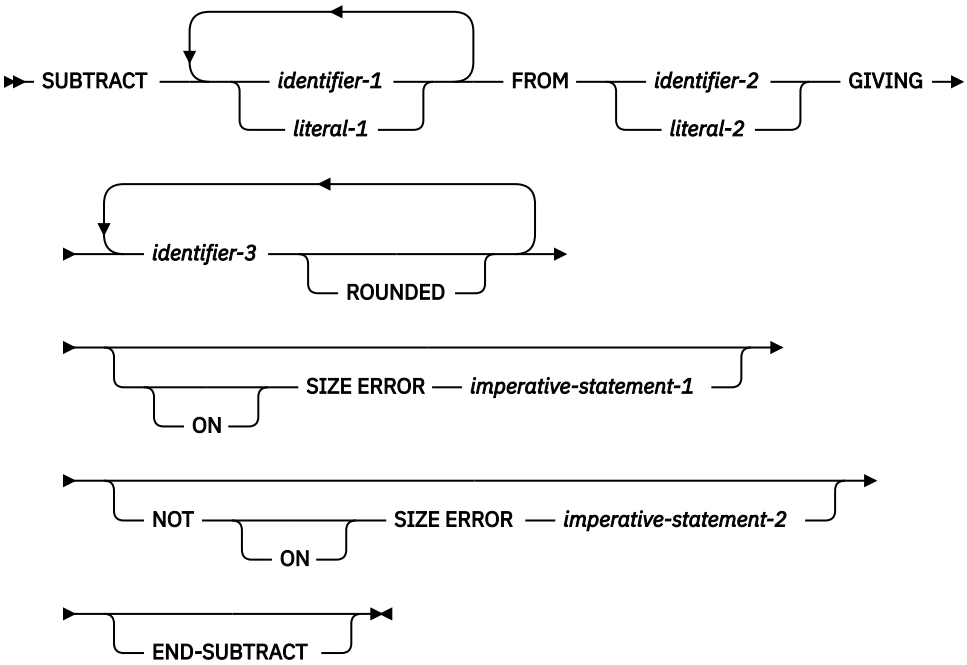

All identifiers or literals preceding the keyword FROM are added together and their sum is subtracted from *identifier-2* or *literal-2*. The result of the subtraction is stored as the new value of each data item referenced by *identifier-3*.

Format 3: SUBTRACT statement with CORRESPONDING phrase

```
►►─ SUBTRACT ─┬─ CORRESPONDING ─┬─ identifier-1 ─ FROM ─ identifier-2 ─►
              └─ CORR ──────────┘

►─┬─ ROUNDED ─┬─┬──────────────┬─ SIZE ERROR ─ imperative-statement-1 ─┬─►
                └─ ON ─────────┘

►─┬─────────────────────────────────────────────────────────────────┬─►
  └─ NOT ─┬──────────┬─ SIZE ERROR ─ imperative-statement-2 ─┘
          └─ ON ─────┘

►─┬──────────────────┬─►◄
  └─ END-SUBTRACT ───┘
```

Elementary data items within *identifier-1* are subtracted from, and the results are stored in, the corresponding elementary data items within *identifier-2*.

When the ARITH(COMPAT) compiler option is in effect, the composite of operands can contain a maximum of 30 digits. When the ARITH(EXTEND) or ARITH(FULL) compiler option is in effect, the composite of operands can contain a maximum of 31 digits. For more information about arithmetic intermediate results, see *Appendix A. Intermediate results and arithmetic precision* in the *COBOL for Linux on x86 Programming Guide*.

For all formats:

identifier

In format 1, must name an elementary numeric data item.

In format 2, must name an elementary numeric data item, unless the identifier follows the word GIVING. Each identifier following the word GIVING must name a numeric or numeric-edited elementary data item.

In format 3, must name an alphanumeric group item or a national group item.

The following restrictions apply to date fields:

- In format 1, *identifier-1* can specify at most one date field. If *identifier-1* specifies a date field, then every instance of *identifier-2* must specify a date field that is compatible with the date field specified by *identifier-1*. If *identifier-1* does not specify a date field, then *identifier-2* can specify one or more date fields, with no restriction on their DATE FORMAT clauses.
- In format 2, *identifier-1* and *identifier-2* can each specify at most one date field. If *identifier-1* specifies a date field, then the FROM *identifier-2* must be a date field that is compatible with the date field specified by *identifier-1*. *identifier-3* can specify one or more date fields. If *identifier-2* specifies a date field and *identifier-1* does not, then every instance of *identifier-3* must specify a date field that is compatible with the date field specified by *identifier-2*.
- In format 3, if an item within *identifier-1* is a date field, then the corresponding item within *identifier-2* must be a compatible date field.
- A year-last date field is allowed in a SUBTRACT statement only as *identifier-1* and when the result of the subtraction is a nondate.

There are two steps to determining the result of a SUBTRACT statement that involves one or more date fields:

1. Subtraction: determine the result of the subtraction operation, as described under "Subtraction that involves date fields" on page 238.

2. Storage: determine how the result is stored in the receiving field. (In formats 1 and 3, the receiving field is *identifier-2*; in format 3, the receiving field is the GIVING *identifier-3*.) For details, see "Storing arithmetic results that involve date fields" on page 239.

literal
Must be a numeric literal.

Floating-point data items and literals can be used anywhere numeric data items and literals can be specified.

ROUNDED phrase

For information about the ROUNDED phrase, and for operand considerations, see "ROUNDED phrase" on page 268.

SIZE ERROR phrases

For information about the SIZE ERROR phrases, and for operand considerations, see "SIZE ERROR phrases" on page 269.

CORRESPONDING phrase (format 3)

See "CORRESPONDING phrase" on page 267.

END-SUBTRACT phrase

This explicit scope terminator serves to delimit the scope of the SUBTRACT statement. END-SUBTRACT permits a conditional SUBTRACT statement to be nested in another conditional statement. END-SUBTRACT can also be used with an imperative SUBTRACT statement.

For more information, see "Delimited scope statements" on page 266.

UNSTRING statement

The UNSTRING statement causes contiguous data in a sending field to be separated and placed into multiple receiving fields.

Format

```
UNSTRING — identifier-1 →
  ┌──────────────────────────────────────────────────────────────────────────────────────────────┐
  ├─ DELIMITED ─┬─────────┬─┬─────────┬─┬─ identifier-2 ─┬─┬──────────────────────────────────────┤
                │   BY    │ │   ALL   │ │ literal-1      │ │                                      │
                                                         │ │  ┌──────────────────────────────────┐
                                                         │ │  │                                  │
                                                         │ │  ├─ OR ─┬─────────┬─┬─ identifier-3 ─┴─┤
                                                         │ │         │   ALL   │ │ literal-2      │
                                                         │ │         │         │ │                │
  ├─ INTO →
  ┌──────────────────────────────────────────────────────────────────────────────────────────────┐
  ├─ identifier-4 ─┬──────────────────────────────────────────────────────────────────────────────┤
                   │ DELIMITER ─┬────────┬─ identifier-5 ─┬─ COUNT ─┬────────┬─ identifier-6 ─┬─┤
                   │            │   IN   │                │         │   IN   │                │
  ├──────────────────────────────────────────────────────────────────────────────────────────────┤
  │ WITH │ POINTER ─ identifier-7 │
  ├──────────────────────────────────────────────────────────────────────────────────────────────┤
  │ TALLYING ─┬────────┬─ identifier-8 │
            │   IN   │
  ├──────────────────────────────────────────────────────────────────────────────────────────────┤
  │ ON │ OVERFLOW ─ imperative-statement-1 │
  ├──────────────────────────────────────────────────────────────────────────────────────────────┤
  │ NOT ─┬────────┬─ OVERFLOW ─ imperative-statement-2 │
       │   ON   │
  ├──────────────────────────────────────────────────────────────────────────────────────────────┤
  │ END-UNSTRING │
```

identifier-1

Represents the *sending field*. Data is transferred from this field to the data receiving fields (*identifier-4*).

identifier-1 must reference a data item of category alphabetic, alphanumeric, alphanumeric-edited, DBCS, national, or national-edited.

identifier-2, literal-1, identifier-3, literal-2

Specifies one or more delimiters.

identifier-2 and *identifier-3* must reference data items of category alphabetic, alphanumeric, alphanumeric-edited, DBCS, national, or national-edited.

literal-1 or *literal-2* must be of category alphanumeric, DBCS, or national and must not be a figurative constant that begins with the word ALL.

identifier-4

Specifies one or more receiving fields.

identifier-4 must reference a data item of category alphabetic, alphanumeric, numeric, DBCS, or national. If the referenced data item is of category numeric, its picture character-string must not contain the picture symbol P, and its usage must be DISPLAY or NATIONAL.

identifier-5
Specifies a field to receive the delimiter associated with *identifier-4*.

Identifier-5 must reference a data item of category alphabetic, alphanumeric, DBCS, or national.

identifier-6
Specifies a field to hold the count of characters that are transferred to *identifier-4*.

identifier-6 must be an integer data item defined without the symbol P in its PICTURE character-string.

identifier-7
Specifies a field to hold a relative character position during UNSTRING processing.

identifier-7 must be an integer data item defined without the symbol P in the PICTURE string.

identifier-7 must be described as a data item of sufficient size to contain a value equal to 1 plus the number of character positions in the data item referenced by *identifier-1*.

identifier-8
Specifies a field that is incremented by the number of delimited fields processed.

identifier-8 must be an integer data item defined without the symbol P in its PICTURE character-string.

The following rules apply:

- If *identifier-4* references a data item of usage DISPLAY, *identifier-1*, *identifier-2*, *identifier-3*, and *identifier-5* must also reference data items of usage DISPLAY and all literals must be alphanumeric literals. Any figurative constant can be specified except NULL or one that begins with the word ALL. Each figurative constant represents a 1-character alphanumeric literal.
- If *identifier-4* references a data item of usage DISPLAY-1, *identifier-1*, *identifier-2*, *identifier-3*, and *identifier-5* must also reference data items of usage DISPLAY-1 and all literals must be DBCS literals. Figurative constant SPACE is the only figurative constant that can be specified. Each figurative constant represents a 1-character DBCS literal.
- If *identifier-4* references a data item of usage NATIONAL, *identifier-1*, *identifier-2*, *identifier-3*, and *identifier-5* must also reference data items of usage NATIONAL and all literals must be national literals. Any figurative constant can be specified except NULL or one that begins with the word ALL. Each figurative constant represents a 1-character national literal.
- None of the identifiers in an UNSTRING statement can be windowed date fields.

Count fields (*identifier-6*) and pointer fields (*identifier-7*) are incremented by number of character positions (alphanumeric, DBCS, or national), not by number of bytes.

One UNSTRING statement can take the place of a series of MOVE statements, except that evaluation or calculation of certain elements is performed only once, at the beginning of the execution of the UNSTRING statement. For more information, see "Values at the end of execution of the UNSTRING statement" on page 400.

The rules for moving are the same as those for a MOVE statement for an elementary sending item of the category of *identifier-1*, with the appropriate *identifier-4* as the receiving item (see "MOVE statement" on page 329). For example, rules for moving a DBCS item are used when *identifier-1* is a DBCS item.

DELIMITED BY phrase

This phrase specifies delimiters within the data that control the data transfer.

Each *identifier-2*, *identifier-3*, *literal-1*, or *literal-2* represents one delimiter.

If the DELIMITED BY phrase is *not* specified, the DELIMITER IN and COUNT IN phrases must *not* be specified.

ALL

Multiple contiguous occurrences of any delimiters are treated as if there were only one occurrence; this one occurrence is moved to the delimiter receiving field (*identifier-5*), if specified. The delimiting characters in the sending field are treated as an elementary item of the same usage and category as *identifier-1* and are moved into the current delimiter receiving field according to the rules of the MOVE statement.

When DELIMITED BY ALL is *not* specified, and two or more contiguous occurrences of any delimiter are encountered, the current data receiving field (*identifier-4*) is filled with spaces or zeros, according to the description of the data receiving field.

Delimiter with two or more characters

A delimiter that contains two or more characters is recognized as a delimiter only if the delimiting characters are in both of the following cases:

- Contiguous
- In the sequence specified in the sending field

Two or more delimiters

When two or more delimiters are specified, an OR condition exists, and each nonoverlapping occurrence of any one of the delimiters is recognized in the sending field in the sequence specified.

For example:

```
DELIMITED BY "AB" or "BC"
```

An occurrence of either AB or BC in the sending field is considered a delimiter. An occurrence of ABC is considered an occurrence of AB.

INTO phrase

This phrase specifies the fields where the data is to be moved.

identifier-4 represents the *data receiving fields*.

DELIMITER IN

This phrase specifies the fields where the delimiters are to be moved.

identifier-5 represents the *delimiter receiving fields*.

The DELIMITER IN phrase must *not* be specified if the DELIMITED BY phrase is *not* specified.

COUNT IN

This phrase specifies the field where the count of examined character positions is held.

identifier-6 is the *data count field* for each data transfer. Each field holds the count of examined character positions in the sending field, terminated by the delimiters or the end of the sending field, for the move to this receiving field. The delimiters are not included in this count.

The COUNT IN phrase must *not* be specified if the DELIMITED BY phrase is *not* specified.

POINTER phrase

When the POINTER phrase is specified, the value of the pointer field, *identifier-7*, behaves as if it were increased by 1 for each examined character position in the sending field. When execution of the UNSTRING statement is completed, the pointer field contains a value equal to its initial value plus the number of character positions examined in the sending field.

When this phrase is specified, the user must initialize the pointer field before execution of the UNSTRING statement begins.

TALLYING IN phrase

When the TALLYING phrase is specified, the area count field, *identifier-8*, contains (at the end of execution of the UNSTRING statement) a value equal to the initial value plus the number of data receiving areas acted upon.

When this phrase is specified, the user must initialize the area count field before execution of the UNSTRING statement begins.

ON OVERFLOW phrases

An overflow condition exists when:

- The pointer value (explicit or implicit) is less than 1.
- The pointer value (explicit or implicit) exceeds a value equal to the length of the sending field.
- All data receiving fields have been acted upon and the sending field still contains unexamined character positions.

When an overflow condition occurs

An overflow condition results in the following actions:

1. No more data is transferred.
2. The UNSTRING operation is terminated.
3. The NOT ON OVERFLOW phrase, if specified, is ignored.
4. Control is transferred to the end of the UNSTRING statement or, if the ON OVERFLOW phrase is specified, to *imperative-statement-1*.

imperative-statement-1

Statement or statements for dealing with an overflow condition.

If control is transferred to *imperative-statement-1*, execution continues according to the rules for each statement specified in imperative- *statement-1*. If a procedure branching or conditional statement that causes explicit transfer of control is executed, control is transferred according to the rules for that statement. Otherwise, upon completion of the execution of *imperative-statement-1*, control is transferred to the end of the UNSTRING statement.

When an overflow condition does not occur

When, during execution of an UNSTRING statement, conditions that would cause an overflow condition are not encountered, then:

1. The transfer of data is completed.
2. The ON OVERFLOW phrase, if specified, is ignored.
3. Control is transferred to the end of the UNSTRING statement or, if the NOT ON OVERFLOW phrase is specified, to *imperative-statement-2*.

imperative-statement-2

Statement or statements for dealing with an overflow condition that does not occur.

If control is transferred to *imperative-statement-2*, execution continues according to the rules for each statement specified in imperative- *statement-2*. If a procedure branching or conditional statement that causes explicit transfer of control is executed, control is transferred according to the rules for that statement. Otherwise, upon completion of the execution of *imperative-statement-2*, control is transferred to the end of the UNSTRING statement.

END-UNSTRING phrase

This explicit scope terminator serves to delimit the scope of the UNSTRING statement. END-UNSTRING permits a conditional UNSTRING statement to be nested in another conditional statement. END-UNSTRING can also be used with an imperative UNSTRING statement.

For more information, see "Delimited scope statements" on page 266.

Data flow

The data flow for the UNSTRING statement is based on certain rules.

When the UNSTRING statement is initiated, data is transferred from the sending field to the current data receiving field, according to the following rules:

Stage 1: Examine

1. If the POINTER phrase is specified, the field is examined, beginning at the relative character position specified by the value in the pointer field.

   If the POINTER phrase is *not* specified, the sending field character-string is examined, beginning with the leftmost character position.
2. If the DELIMITED BY phrase is specified, the examination proceeds from left to right, examining character positions one-by-one until a delimiter is encountered. If the end of the sending field is reached before a delimiter is found, the examination ends with the last character position in the sending field. If there are more receiving fields, the next one is selected; otherwise, an overflow condition occurs.

   If the DELIMITED BY phrase is *not* specified, the number of character positions examined is equal to the size of the current data receiving field, as described in the table below. The size depends on the category treatment of the receiving field, as shown in Table 48 on page 322.

Table 58. ***Character positions examined when DELIMITED BY is not specified***

If the receiving field is ...	**The number of character positions examined is ...**
Alphanumeric or alphabetic	Equal to the number of alphanumeric character positions in the current receiving field
DBCS	Equal to the number of DBCS character positions in the current receiving field
National	Equal to the number of national character positions in the current receiving field
Numeric	Equal to the number of character positions in the integer portion of the current receiving field
Described with the SIGN IS SEPARATE clause	1 less than the size of the current receiving field
Described as a variable-length data item	Determined by the size of the current receiving field at the beginning of the UNSTRING operation

Stage 2: Move

3. The examined character positions (excluding any delimiter characters) are treated as an elementary data item of the same data category as the sending field except for the cases shown in the table below.

Category of *identifier-1* (sending-field)	**Category of elementary data item**
Alphanumeric-edited	Alphanumeric
National-edited	National

That elementary data item is moved to the current data receiving field according to the rules for the MOVE statement for the categories of the sending and receiving fields as described in "MOVE statement" on page 329.

4. If the DELIMITER IN phrase is specified, the delimiting characters in the sending field are treated as an elementary alphanumeric item and are moved to the current delimiter receiving field, according to the rules for the MOVE statement. If the delimiting condition is the end of the sending field, the current delimiter receiving field is filled with spaces.
5. If the COUNT IN phrase is specified, a value equal to the number of examined character positions (excluding any delimiters) is moved into the data count field, according to the rules for an elementary move.

Stage 3: Successive iterations

6. If the DELIMITED BY phrase is specified, the sending field is further examined, beginning with the first character position to the right of the delimiter.

   If the DELIMITED BY phrase is *not* specified, the sending field is further examined, beginning with the first character position to the right of the last character position examined.
7. For each succeeding data receiving field, this process of examining and moving is repeated until either of the following conditions occurs:
   - All the characters in the sending field have been transferred.
   - There are no more unfilled data receiving fields.

Values at the end of execution of the UNSTRING statement

At the beginning of the execution of the UNSTRING statement, certain operations are performed only once.

The operations are:

- Calculations of subscripts, reference modifications, variable-lengths, variable locations
- Evaluations of functions

Therefore, if *identifier-4*, *identifier-5*, *identifier-6*, *identifier-7*, or *identifier-8* is used as a subscript, reference-modifier, or function argument in the UNSTRING statement, or affects the length or location of any of the identifiers in the UNSTRING statement, these values are determined at the beginning of the UNSTRING statement, and are *not* affected by any results of the UNSTRING statement.

Example of the UNSTRING statement

This topic lists an example for the UNSTRING statement.

The following figure shows the execution results for an example of the UNSTRING statement.

```
UNSTRING ID-SEND DELIMITED BY DEL-ID OR ALL "*"
    INTO ID-R1 DELIMITER IN ID-D1 COUNT IN ID-C1      (All the data
         ID-R2 DELIMITER IN ID-D2                     receiving fields
         ID-R3 DELIMITER IN ID-D3 COUNT IN ID-C3      are defined as
         ID-R4 COUNT IN ID-C4                         alphanumeric)
    WITH POINTER ID-P
    TALLYING IN ID-T
    ON OVERFLOW GO TO OFLOW-EXIT.
```

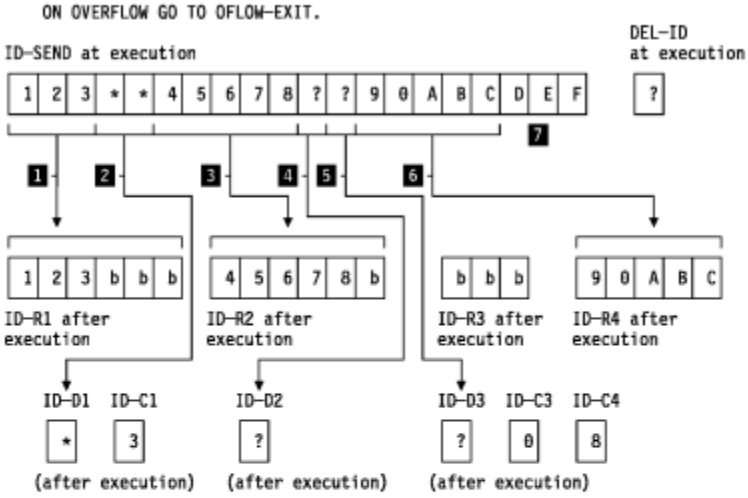

ID-P (pointer) ID-T (tallying field)

2 1 0 5

(after execution—both initialized to 01 before execution)

The order of execution is:

1. 3 characters are placed in ID-R1.
2. Because ALL * is specified, all consecutive asterisks are processed, but only one asterisk is placed in ID-D1.
3. 5 characters are placed in ID-R2.
4. A ? is placed in ID-D2. The current receiving field is now ID-R3.
5. A ? is placed in ID-D3; ID-R3 is filled with spaces; no characters are transferred, so 0 is placed in ID-C3.
6. No delimiter is encountered before 5 characters fill ID-R4; 8 is placed in ID-C4, representing the number of characters examined since the last delimiter.
7. ID-P is updated to 21, the total length of the sending field + 1; ID-T is updated to 5, the number of fields acted upon + 1. Since there are no unexamined characters in the ID-SEND, the OVERFLOW EXIT is not taken.

WRITE statement

The WRITE statement releases a logical record to an output or input/output file.

When the WRITE statement is executed:

- The associated sequential file must be open in OUTPUT or EXTEND mode.
- The associated indexed or relative file must be open in OUTPUT, I-O, or EXTEND mode.

Format 1: WRITE statement for sequential files

```
WRITE ── record-name-1 ┬──────────────────────┬──►
                       └── FROM ── identifier-1 ┘

  ┬──────────────────────
```

Format 3: WRITE statement for line-sequential files

```
►► WRITE ── record-name-1 ──┬──────────────────────────┬──►
                            └── FROM ── identifier-1 ──┘

►┬──────────────────────────────────────────────────────────────────────────────┬►
 │                                                                              │
 │                                                   ┌──────────────────────┐   │
 │                                                   │                      │   │
 │                                                   │   ┌──────────────┐   │   │
 │                                                   │   │              │   │   │
 │                                                   │   │   ┌──────┐   │   │   │
 │                                                   │   │   │      │   │   │   │
 │                                                   │   │   │      │   │   │   │
 │                                                   │   │   │      │
```

ADVANCING phrase rules

When the ADVANCING phrase is specified, the following rules apply:

1. When BEFORE ADVANCING is specified, the line is printed before the page is advanced.
2. When AFTER ADVANCING is specified, the page is advanced before the line is printed.
3. When *identifier-2* is specified, the page is advanced the number of lines equal to the current value in *identifier-2*. *identifier-2* must name an elementary integer data item. *identifier-2* cannot name a windowed date field.
4. When integer is specified, the page is advanced the number of lines equal to the value of integer.
5. Integer or the value in *identifier-2* can be zero.
6. When PAGE is specified, the record is printed on the logical page BEFORE or AFTER (depending on the phrase used) the device is positioned to the next logical page. If PAGE has no meaning for the device used, then BEFORE or AFTER (depending on the phrase specified) ADVANCING 1 LINE is provided.

   If the FD entry contains a LINAGE clause, the repositioning is to the first printable line of the next page, as specified in that clause. If the LINAGE clause is omitted, the repositioning is to line 1 of the next succeeding page.

When the ADVANCING phrase is omitted, automatic line advancing is provided, as if AFTER ADVANCING 1 LINE had been specified.

LINAGE-COUNTER rules

If the LINAGE clause is specified for this file, the associated LINAGE-COUNTER special register is modified during the execution of the WRITE statement, according to the following rules:

1. If ADVANCING PAGE is specified, LINAGE-COUNTER is reset to 1.
2. If ADVANCING *identifier-2* or *integer* is specified, LINAGE-COUNTER is increased by the value in *identifier-2* or *integer*.
3. If the ADVANCING phrase is omitted, LINAGE-COUNTER is increased by 1.
4. When the device is repositioned to the first available line of a new page, LINAGE-COUNTER is reset to 1.

END-OF-PAGE phrases

When END-OF-PAGE is specified, and the logical end of the printed page is reached during execution of the WRITE statement, the END-OF-PAGE imperative-statement is executed. When the END-OF-PAGE phrase is specified, the FD entry for this file must contain a LINAGE clause.

The logical end of the printed page is specified in the associated LINAGE clause.

An END-OF-PAGE condition is reached when execution of a WRITE END-OF-PAGE statement causes printing or spacing within the footing area of a page body. This occurs when execution of such a WRITE statement causes the value in the LINAGE-COUNTER special register to equal or exceed the value specified in the WITH FOOTING phrase of the LINAGE clause. The WRITE statement is executed, and then the END-OF-PAGE imperative-statement is executed.

An automatic page overflow condition is reached whenever the execution of any given WRITE statement (with or without the END-OF-PAGE phrase) cannot be completely executed within the current page body. This occurs when a WRITE statement, if executed, would cause the value in the LINAGE-COUNTER to exceed the number of lines for the page body specified in the LINAGE clause. In this case, the line is printed BEFORE or AFTER (depending on the option specified) the device is repositioned to the first printable line on the next logical page, as specified in the LINAGE clause. If the END-OF-PAGE phrase is specified, the END-OF-PAGE imperative-statement is then executed.

If the WITH FOOTING phrase of the LINAGE clause is not specified, the automatic page overflow condition exists because no end-of-page condition (as distinct from the page overflow condition) can be detected.

If the WITH FOOTING phrase is specified, but the execution of a given WRITE statement would cause the LINAGE-COUNTER to exceed both the footing value and the page body value specified in the LINAGE clause, then both the end-of-page condition and the automatic page overflow condition occur simultaneously.

The keywords END-OF-PAGE and EOP are equivalent.

You can specify both the ADVANCING PAGE phrase and the END-OF-PAGE phrase in a single WRITE statement.

INVALID KEY phrases

An invalid key condition is caused by the following cases:

- For sequential files, an attempt is made to write beyond the externally defined boundary of the file.
- For indexed files:
  - An attempt is made to write beyond the externally defined boundary of the file.
  - ACCESS SEQUENTIAL is specified and the file is opened OUTPUT, and the value of the prime record key is not greater than that of the previous record.
  - The file is opened OUTPUT or I-O and the value of the prime record key equals that of an already existing record.
- For relative files:
  - An attempt is made to write beyond the externally defined boundary of the file.
  - When the access mode is random or dynamic and the RELATIVE KEY data item specifies a record that already exists in the file.
  - The number of significant digits in the relative record number is larger than the size of the relative key data item for the file.

When an invalid key condition occurs:

- If the INVALID KEY phrase is specified, *imperative-statement-1* is executed. For details of invalid key processing, see Invalid key condition.
- Otherwise, the WRITE statement is unsuccessful and the contents of *record-name* are unaffected and the following case occurs:
  - For sequential files, the file status key, if specified, is updated and an EXCEPTION/ERROR condition exists.

    If an explicit or implicit EXCEPTION/ERROR procedure is specified for the file, the procedure is executed. If no such procedure is specified, the results are unpredictable.
  - For relative and indexed files, program execution proceeds according to the rules described by Invalid key condition under "Common processing facilities".

    The INVALID KEY conditions that apply to a relative file in OPEN OUTPUT mode also apply to one in OPEN EXTEND mode.
- If the NOT INVALID KEY phrase is specified and a valid key condition exists at the end of the execution of the WRITE statement, control is passed to *imperative-statement-4*.

Both the INVALID KEY phrase and an applicable EXCEPTION/ERROR procedure can be omitted.

END-WRITE phrase

This explicit scope terminator serves to delimit the scope of the WRITE statement. END-WRITE permits a conditional WRITE statement to be nested in another conditional statement. END-WRITE can also be used with an imperative WRITE statement.

For more information, see “Delimited scope statements” on page 266.

WRITE for sequential files

The maximum record size for sequential files is established at the time the file is created and cannot subsequently be changed.

After the WRITE statement is executed, the logical record is no longer available in *record-name-1* unless either:

- The associated file is named in a SAME RECORD AREA clause (in which case, the record is also available as a record of the other files named in the SAME RECORD AREA clause)
- The WRITE statement is unsuccessful because of a boundary violation.

In either of these two cases, the logical record is still available in *record-name-1*.

The file position indicator is not affected by execution of the WRITE statement.

The number of character positions required to store the record in a file might or might not be the same as the number of character positions defined by the logical description of that record in the COBOL program. (See "PICTURE clause editing" on page 197 and "USAGE clause" on page 216.)

If the FILE STATUS clause is specified in the file-control entry, the associated file status key is updated when the WRITE statement is executed, whether or not execution is successful.

The WRITE statement can only be executed for a sequential file opened in OUTPUT mode.

WRITE for indexed files

Before the WRITE statement is executed for indexed files, you must set the prime record key (the RECORD KEY data item, as defined in the file-control entry) to the required value. Note that RECORD KEY values must be unique within a file.

If the ALTERNATE RECORD KEY clause is also specified in the file-control entry, each alternate record key must be unique, unless the DUPLICATES phrase is specified. If the DUPLICATES phrase is specified, alternate record key values might not be unique. In this case, the system stores the records so that later sequential access to the records allows retrieval in the same order in which they were stored.

When ACCESS IS SEQUENTIAL is specified in the file-control entry, records must be released in ascending order of RECORD KEY values.

When ACCESS IS RANDOM or ACCESS IS DYNAMIC is specified in the file-control entry, records can be released in any programmer-specified order.

WRITE for relative files

For relative record OUTPUT files, the WRITE statement causes actions as described in the topic.

- If ACCESS IS SEQUENTIAL is specified:

  The first record released has relative record number 1, the second record released has relative record number 2, the third number 3, and so on.

  If the RELATIVE KEY is specified in the file-control entry, the relative record number of the record just released is placed in the RELATIVE KEY during execution of the WRITE statement.
- If ACCESS IS RANDOM or ACCESS IS DYNAMIC is specified, the RELATIVE KEY must contain the required relative record number for this record before the WRITE statement is executed. When the WRITE statement is executed, this record is placed at the specified relative record number position in the file.

For I-O files, either ACCESS IS RANDOM or ACCESS IS DYNAMIC must be specified; the WRITE statement inserts new records into the file. The RELATIVE KEY must contain the required relative record number for this record before the WRITE statement is executed. When the WRITE statement is executed, this record is placed at the specified relative record number position in the file.

XML GENERATE statement

The XML GENERATE statement converts data to XML format.

Format

```
XML GENERATE — identifier-1 — FROM — identifier-2 →

  COUNT [IN] identifier-3

  [WITH] ENCODING — codepage

  [WITH] XML-DECLARATION   [WITH] ATTRIBUTES

  NAMESPACE [IS] identifier-4 | literal-4   NAMESPACE-PREFIX [IS] identifier-5 | literal-5

  NAME [OF] identifier-6 [IS] literal-6 ↺

  TYPE [OF] identifier-7 [IS] ATTRIBUTE | ELEMENT | CONTENT ↺

  SUPPRESS identifier-8 [when-phrase] | generic-suppression-phrase ↺

  [ON] EXCEPTION — imperative-statement-1

  [NOT [ON] EXCEPTION — imperative-statement-2]   [END-XML]
```

***when-phrase* Format**

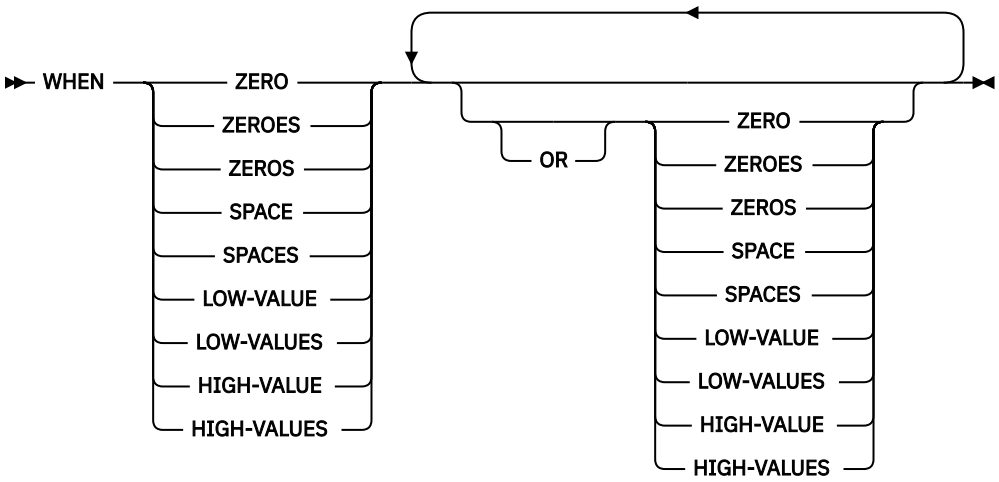

***generic-suppression-phrase* Format**

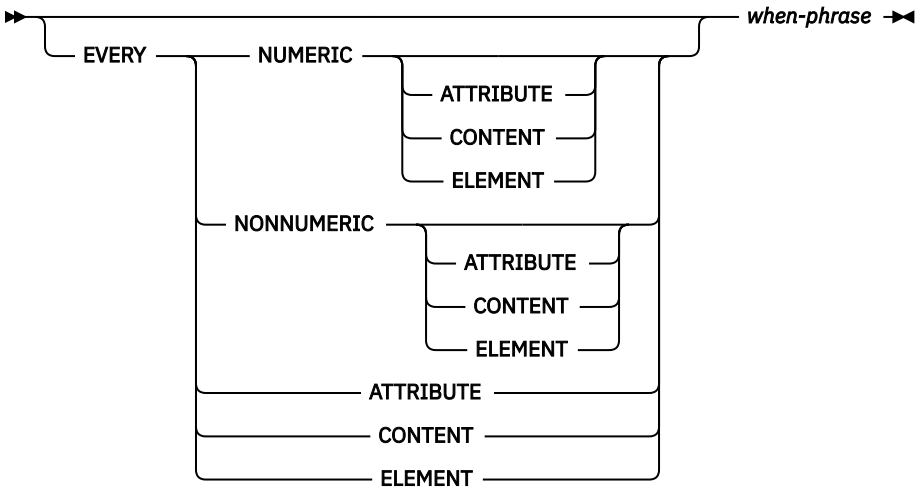

identifier-1

The receiving area for a generated XML document. *identifier-1* must reference one of the following items:

- An elementary data item of category alphanumeric
- An alphanumeric group item
- An elementary data item of category national
- A national group item

When *identifier-1* references a national group item, *identifier-1* is processed as an elementary data item of category national. When *identifier-1* references an alphanumeric group item, *identifier-1* is treated as though it were an elementary data item of category alphanumeric.

identifier-1 must not be described with the JUSTIFIED clause, and cannot be a function identifier. *identifier-1* can be subscripted or reference modified.

identifier-1 must not overlap *identifier-2*, *identifier-3*, *codepage* (if an identifier), *identifier-4*, or *identifier-5*.

The generated XML output is encoded as described in the documentation of the ENCODING phrase.

Either *identifier-1* must reference a data item of category national, or if *identifier-1* is category alphanumeric, the document encoding must be Unicode UTF-8, if any of the following statements are true:

- *identifier-4* or *identifier-5* references a data item of category national.
- *literal-4*, *literal-5*, or *literal-6* is of category national.
- *codepage* is a national literal or references a data item of category national.
- The generated XML includes data from *identifier-2* for:
  - Any data item of class national or class DBCS
  - Any data item with a multibyte name (that is, a data item whose name consists of multibyte characters)
  - Any data item of class alphanumeric that contains multibyte characters

identifier-1 must be large enough to contain the generated XML document. Typically, it must be from 5 to 10 times the size of *identifier-2*, depending on the length of the data-name or data-names within *identifier-2*. If *identifier-1* is not large enough, an error condition exists at the end of the XML GENERATE statement.

identifier-2

The group or elementary data item to be converted to XML format.

If *identifier-2* references a national group item, identifier-2 is processed as a group item. When identifier-2 includes a subordinate national group item, that subordinate item is processed as a group item.

identifier-2 cannot be a function identifier or be reference modified, but it can be subscripted.

identifier-2 must not overlap *identifier-1* or *identifier-3*.

The data description entry for *identifier-2* must not contain a RENAMES clause.

The following data items that are specified by *identifier-2* are ignored by the XML GENERATE statement:

- Any subordinate unnamed elementary data items or elementary FILLER data items
- Any slack bytes inserted for SYNCHRONIZED items
- Any data item subordinate to *identifier-2* that is described with the REDEFINES clause or that is subordinate to such a redefining item
- Any data item subordinate to *identifier-2* that is described with the RENAMES clause
- Any group data item all of whose subordinate data items are ignored

All data items specified by *identifier-2* that are not ignored according to the previous rules must satisfy the following conditions:

- Each elementary data item must either have class alphabetic, alphanumeric, numeric, or national, or be an index data item. (That is, no elementary data item can be described with the USAGE POINTER, USAGE FUNCTION-POINTER, or USAGE PROCEDURE-POINTER phrase.)
- There must be at least one such elementary data item.
- Each non-FILLER data-name must be unique within any immediately superordinate group data item.
- Any multibyte data-names, when converted to Unicode, must be legal as names in the XML specification, version 1.0. For details about the XML specification, see *XML specification*.
- The data items must not specify the DATE FORMAT clause, or the DATEPROC compiler option must not be in effect.

For example, consider the following data declaration:

```
01 STRUCT.
```

```
02 STAT PIC X(4).
02 IN-AREA PIC X(100).
02 OK-AREA REDEFINES IN-AREA.
  03 FLAGS PIC X.
  03 PIC X(3).
  03 COUNTER USAGE COMP-5 PIC S9(9).
  03 ASFNPTR REDEFINES COUNTER USAGE FUNCTION-POINTER.
  03 UNREFERENCED PIC X(92).
02 NG-AREA1 REDEFINES IN-AREA.
  03 FLAGS PIC X.
  03 PIC X(3).
  03 PTR USAGE POINTER.
  03 ASNUM REDEFINES PTR USAGE COMP-5 PIC S9(9).
  03 PIC X(92).
02 NG-AREA2 REDEFINES IN-AREA.
  03 FN-CODE PIC X.
  03 UNREFERENCED PIC X(3).
  03 QTYONHAND USAGE BINARY PIC 9(5).
  03 DESC USAGE NATIONAL PIC N(40).
  03 UNREFERENCED PIC X(12).
```

The following data items from the previous example can be specified as *identifier-2*:

- STRUCT, of which subordinate data items STAT and IN-AREA would be converted to XML format. (OK-AREA, NG-AREA1, and NG-AREA2 are ignored because they specify the REDEFINES clause.)
- OK-AREA, of which subordinate data items FLAGS, COUNTER, and UNREFERENCED would be converted. (The item whose data description entry specifies `03 PIC X(3)` is ignored because it is an elementary FILLER data item. ASFNPTR is ignored because it specifies the REDEFINES clause.)
- Any of the elementary data items that are subordinate to STRUCT except:
  - ASFNPTR or PTR (disallowed usage)
  - `UNREFERENCED OF NG-AREA2` (nonunique names for data items that are otherwise eligible)
  - Any FILLER data items

The following data items cannot be specified as *identifier-2*:

- NG-AREA1, because subordinate data item PTR specifies USAGE POINTER but does not specify the REDEFINES clause. (PTR would be ignored if it specified the REDEFINES clause.)
- NG-AREA2, because subordinate elementary data items have the nonunique name UNREFERENCED.

COUNT IN phrase

If the COUNT IN phrase is specified, *identifier-3* contains (after execution of the XML GENERATE statement) the count of generated XML character encoding units. If *identifier-1* (the receiver) has category national, the count is in UTF-16 character encoding units. For all other encodings (including UTF-8), the count is in bytes.

identifier-3

The data count field. Must be an integer data item defined without the symbol P in its picture string.

identifier-3 must not overlap *identifier-1*, *identifier-2*, *codepage* (if an identifier), *identifier-4*, or *identifier-5*.

ENCODING phrase

The ENCODING phrase, if specified, determines the encoding of the generated XML document.

codepage

Must be an unsigned integer data item, an unsigned integer literal, an alphanumeric literal, a national literal, or reference a data item of category alphanumeric or national. If *codepage* is a literal, it must not be a figurative constant.

If *codepage* is of class alphanumeric or national, it must identify a primary or alias code-page name that is supported by ICU conversion libraries (see *International Components for Unicode: Converter Explorer*). If *codepage* is an integer, the integer must be a valid CCSID number.

If *identifier-1* references a data item of category national, *codepage* must identify UTF-16 in little-endian format.

If *identifier-1* references a data item of category alphanumeric, *codepage* must identify UTF-8 or a single-byte ASCII or EBCDIC code page:

- If the CHAR(EBCDIC) compiler option is not in effect or the data description entry for *identifier-1* contains the NATIVE phrase, *codepage* must identify UTF-8 or a single-byte ASCII code page.
- If CHAR(EBCDIC) is in effect and the data description entry for *identifier-1* does not contain the NATIVE phrase, *codepage* must identify a single-byte EBCDIC code page.

If *codepage* is an identifier, it must not overlap *identifier-1* or *identifier-3*.

If the ENCODING phrase is omitted and *identifier-1* is of category national, the document encoding is Unicode UTF-16 in little-endian format.

If the ENCODING phrase is omitted and *identifier-1* is of category alphanumeric, then:

- If CHAR(EBCDIC) is not in effect or the data description entry for *identifier-1* contains the NATIVE phrase, the XML document is encoded using the code page from the runtime locale.
- If CHAR(EBCDIC) option is in effect and the data description entry for *identifier-1* does not contain the NATIVE phrase, the XML document is encoded using the code page from the EBCDIC_CODEPAGE environment variable. If EBCDIC_CODEPAGE is not set, the encoding is the default EBCDIC code page associated with the runtime locale.

XML-DECLARATION phrase

If the XML-DECLARATION phrase is specified, the generated XML document starts with an XML declaration that includes the XML version information and an encoding declaration.

If *identifier-1* is of category national, the encoding declaration has the value UTF-16 (`encoding="UTF-16"`).

If *identifier-1* is of category alphanumeric, the encoding declaration is derived from the ENCODING phrase, if specified, or from the runtime locale or the EBCDIC_CODEPAGE environment variable if the ENCODING phrase is not specified. See the description of the ENCODING phrase for further details.

For an example of the effect of coding the XML-DECLARATION phrase, see *Generating XML output* in the *COBOL for Linux on x86 Programming Guide*.

If the XML-DECLARATION phrase is omitted, the generated XML document does not include an XML declaration.

ATTRIBUTES phrase

If the ATTRIBUTES phrase is specified, each eligible item included in the generated XML document is expressed as an attribute of the XML element that corresponds to the data item immediately superordinate to that eligible item, rather than as a child element of the XML element. To be eligible, a data item must be elementary, must have a name other than FILLER, and must not specify an OCCURS clause in its data description entry.

If the TYPE phrase is specified for particular identifiers, the TYPE phrase takes precedence for those identifiers over the WITH ATTRIBUTES phrase.

For an example of the effect of the ATTRIBUTES phrase, see *Generating XML output* in the *COBOL for Linux on x86 Programming Guide*.

NAMESPACE and NAMESPACE-PREFIX phrases

Use the NAMESPACE phrase to identify a *namespace* for the generated XML document. If the NAMESPACE phrase is not specified, or if *identifier-4* has length zero or contains all spaces, the element names of XML documents produced by the XML GENERATE statement are not in any namespace.

Use the NAMESPACE-PREFIX phrase to qualify the start and end tag of each element in the generated XML document with a prefix.

If the NAMESPACE-PREFIX phrase is not specified, or if *identifier-5* is of length zero or contains all spaces, the namespace specified by the NAMESPACE phrase specifies the default namespace for the document. In this case, the namespace declared on the root element applies by default to each

element name in the document, including that of the root element. (Default namespace declarations do not apply directly to attribute names.)

If the NAMESPACE-PREFIX phrase is specified, and *identifier-5* is not of length zero and does not contain all spaces, then the start and end tag of each element in the generated document is qualified with the specified prefix. The prefix should therefore preferably be short. When the XML GENERATE statement is executed, the prefix must be a valid XML name, but without the colon (`:`), as defined in *Namespaces in XML 1.0*. The prefix can have trailing spaces, which are removed before use.

identifier-4*, *literal-4*; *identifier-5*, *literal-5

identifier-4, *literal-4*: The namespace identifier, which must be a valid *Uniform Resource Identifier (URI)* as defined in *Uniform Resource Identifier (URI): Generic Syntax*.

identifier-5, *literal-5*: The namespace prefix, which serves as an alias for the namespace identifier.

identifier-4 and *identifier-5* must reference data items of category alphanumeric or national.

identifier-4 and *identifier-5* must not overlap *identifier-1* or *identifier-3*.

literal-4 and *literal-5* must be of category alphanumeric or national, and must not be figurative constants.

For full details about namespaces, see *Namespaces in XML 1.0*.

For examples that show the use of the NAMESPACE and NAMESPACE-PREFIX phrases, see *Generating XML output* in the *COBOL for Linux on x86 Programming Guide*.

NAME phrase

Allows you to supply element and attribute names.

identifier-6 must reference *identifier-2* or one of its subordinate data items. It cannot be a function identifier and cannot be reference modified or subscripted. It must not specify any data item which is ignored by the XML GENERATE statement. For more information about *identifier-2*, see the description of *identifier-2*. If *identifier-6* is specified more than once in the NAME phrase, the last specification is used.

literal-6 must be an alphanumeric or national literal containing the attribute or element name to be generated in the XML document corresponding to *identifier-6*. It must be a valid XML local name. If *literal-6* is a national literal, *identifier-1* must reference a data item of category national or the encoding phrase must specify UTF-16.

TYPE phrase

Allows you to control attribute and element generation.

identifier-7 must reference an elementary data item that is subordinate to *identifier-2*. It cannot be a function identifier and cannot be reference modified or subscripted. It must not specify any data item which is ignored by the XML GENERATE statement. For more information about *identifier-2*, see the description of *identifier-2*. If *identifier-7* is specified more than once in the TYPE phrase, the last specification is used.

- If the XML GENERATE statement also includes a WITH ATTRIBUTES phrase, the TYPE phrase has precedence for *identifier-7*.
- When ATTRIBUTE is specified, *identifier-7* must be eligible to be an XML attribute. *identifier-7* is expressed in the generated XML as an attribute of the XML element immediately superordinate to *identifier-7* rather than as a child element.
- When ELEMENT is specified, *identifier-7* is expressed in the generated XML as an element. The XML element name is derived from *identifier-7* and the element character content is derived from the converted content of *identifier-7* as described in "Operation of XML GENERATE" on page 414.
- When CONTENT is specified, *identifier-7* is expressed in the generated XML as element character content of the XML element that corresponds to the data item immediately superordinate to *identifier-7*. The value of the element character content is derived from the converted content of *identifier-7* as described in "Operation of XML GENERATE" on page 414. When CONTENT is specified for multiple identifiers all corresponding to the same superordinate identifier, the multiple contributions to the element character content are concatenated.

SUPPRESS phrase

Allows you to identify and unconditionally suppress items that are subordinate to *identifier-2* and selectively generate output for the XML GENERATE statement. If the SUPPRESS phrase is specified, *identifier-1* must be large enough to contain the generated XML document before any suppression.

With the *generic-suppression-phrase*, elementary items subordinate to *identifier-2* that are not otherwise ignored by XML GENERATE operations are identified generically for potential suppression. Either items of class numeric, if the NUMERIC keyword is specified, or items that are not of class numeric, if the NONNUMERIC keyword is specified, or both, might be suppressed. If the ATTRIBUTE keyword is specified, only items that would be expressed in the generated XML document as an XML attribute are identified for potential suppression. If the ELEMENT keyword is specified, only items that would be expressed in the generated XML document as an XML element are identified for potential suppression. If the CONTENT keyword is specified, only items that would be expressed in the generated XML document as element character content of the XML element corresponding to the data item superordinate to the CONTENT data item are identified for potential suppression.

If multiple *generic-suppression-phrase* are specified, the effect is cumulative.

identifier-8 explicitly identifies items for potential suppression. If the WHEN phrase is specified, *identifier-8* must reference an elementary data item that is subordinate to *identifier-2* and that is not otherwise ignored by the XML GENERATE operations. *identifier-8* cannot be a function identifier and cannot be reference modified or subscripted.If the WHEN phrase is omitted, *identifier-8* can reference not only an elementary data item but also a group data item. That group data item and all data items that are subordinate to the group item are suppressed. If *identifier-8* is specified more than once in the SUPPRESS phrase, the last specification is used. The explicit suppression specification for *identifier-8* overrides the suppression specification that is implied by any *generic-suppression-phrase*, if *identifier-8* is also one of the identifiers generically identified.

If *identifier-8* is specified, the following rules apply to it:

- If ZERO, ZEROES, or ZEROS is specified in the WHEN phrase, *identifier-8* must not be of USAGE DISPLAY-1.
- If SPACE or SPACES is specified in the WHEN phrase, *identifier-8* must be of USAGE DISPLAY, DISPLAY-1, or NATIONAL. If *identifier-8* is a zoned or national decimal item, it must be an integer.
- If LOW-VALUE, LOW-VALUES, HIGH-VALUE, or HIGH-VALUES is specified in the WHEN phrase, *identifier-8* must be of USAGE DISPLAY or NATIONAL. If *identifier-8* is a zoned or national decimal item, it must be an integer.

If the *generic-suppression-phrase* is specified, data items are selected for potential suppression according to the following rules:

- If ZERO, ZEROES, or ZEROS is specified in the WHEN phrase, all data items except those that are defined with USAGE DISPLAY-1 are selected.
- If SPACE or SPACES is specified in the WHEN phrase, data items of USAGE DISPLAY, DISPLAY-1, or NATIONAL are selected. For zoned or national decimal items, only integers are selected.
- If LOW-VALUE, LOW-VALUES, HIGH-VALUE, or HIGH-VALUES is specified in the WHEN phrase, data items of USAGE DISPLAY or NATIONAL are selected. For zoned or national decimal items, only integers are selected.

The comparison operation that determines whether an item will be suppressed is a relation condition as shown in the table of Comparisons involving figurative constants. That is, the comparison is a numeric comparison if the value specified is ZERO, ZEROS, or ZEROES, and the item is of class numeric. For all other cases, the comparison operation is an alphanumeric, DBCS, or national comparison, depending on whether the item is of usage DISPLAY, DISPLAY-1 or NATIONAL, respectively.

When the SUPPRESS phrase is specified, a group item subordinate to *identifier-2* is suppressed in the generated XML document if all the eligible items subordinate to the group item are suppressed or if, after suppressing any subordinate items, the XML corresponding to the group item would be an empty element with no attributes. The root element is always generated, even if all the items subordinate to *identifier-2* are suppressed.

ON EXCEPTION phrase

An exception condition exists when an error occurs during generation of the XML document, for example if *identifier-1* is not large enough to contain the generated XML document. In this case, XML generation stops and the content of the receiver, *identifier-1*, is undefined. If the COUNT IN phrase is specified, *identifier-3* contains the number of character positions that were generated, which can range from 0 to the length of *identifier-1*.

If the ON EXCEPTION phrase is specified, control is transferred to *imperative-statement-1*. If the ON EXCEPTION phrase is not specified, the NOT ON EXCEPTION phrase, if any, is ignored, and control is transferred to the end of the XML GENERATE statement. Special register XML-CODE contains an exception code, as detailed in *Handling XML GENERATE exceptions* in the *COBOL for Linux on x86 Programming Guide*.

NOT ON EXCEPTION phrase

If an exception condition does not occur during generation of the XML document, control is passed to *imperative-statement-2*, if specified, otherwise to the end of the XML GENERATE statement. The ON EXCEPTION phrase, if specified, is ignored. Special register XML-CODE contains zero after execution of the XML GENERATE statement.

END-XML phrase

This explicit scope terminator delimits the scope of XML GENERATE or XML PARSE statements. END-XML permits a conditional XML GENERATE or XML PARSE statement (that is, an XML GENERATE or XML PARSE statement that specifies the ON EXCEPTION or NOT ON EXCEPTION phrase) to be nested in another conditional statement.

The scope of a conditional XML GENERATE or XML PARSE statement can be terminated by:

- An END-XML phrase at the same level of nesting
- A separator period

END-XML can also be used with an XML GENERATE or XML PARSE statement that does not specify either the ON EXCEPTION or the NOT ON EXCEPTION phrase.

For more information about explicit scope terminators, see "Delimited scope statements" on page 266.

Nested XML GENERATE or XML PARSE statements

When a given XML GENERATE or XML PARSE statement appears as *imperative-statement-1* or *imperative-statement-2*, or as part of *imperative-statement-1* or *imperative-statement-2* of another XML GENERATE or XML PARSE statement, that given XML GENERATE or XML PARSE statement is a *nested* XML GENERATE or XML PARSE statement.

Nested XML GENERATE or XML PARSE statements are considered to be matched XML GENERATE and END-XML combinations, or XML PARSE and END-XML combinations, proceeding from left to right. Thus, any END-XML phrase that is encountered is matched with the nearest preceding XML GENERATE or XML PARSE statement that has not been implicitly or explicitly terminated.

Operation of XML GENERATE

The content of each eligible elementary data item within *identifier-2* that has not been suppressed from XML generation according to a SUPPRESS phrase, is converted to character format.

Only the first definition of each storage area is processed. Redefinitions of data items are not included. Data items that are effectively defined by the RENAMES clause are also not included.

For information about the format conversion of elementary data, see "Format conversion of elementary data" on page 415 and "Trimming of generated XML data" on page 416.

If the TYPE OF phrase is specified, the converted content is then processed as element character content or attribute value, according to the specifications on that phrase. If the TYPE OF phrase is not specified, by default the converted content is inserted as element character content, or, if the WITH ATTRIBUTES

phrase is specified and the data item is eligible to be expressed as an attribute, as the value of the attribute, in the generated XML document.

The XML element names and attribute names are obtained from the NAME phrase if specified; otherwise by default they are derived from the data-names within *identifier-2* as described in "XML element name and attribute name formation" on page 417. The names of group items that contain the selected elementary items are retained as parent elements. If the NAMESPACE-PREFIX phrase is specified, the prefix value, minus any trailing spaces, is used to qualify the start and end tag of each element.

No extra white space (new lines, indentation, and so forth) is inserted to make the generated XML more readable. An XML declaration is generated if the XML-DECLARATION phrase is specified.

If the receiving area specified by *identifier-1* is not large enough to contain the resulting XML document, an error condition exists. See the description of the ON EXCEPTION phrase above for details.

If *identifier-1* is longer than the generated XML document, only that part of *identifier-1* in which XML is generated is changed. The rest of *identifier-1* contains the data that was present before this execution of the XML GENERATE statement. To avoid referring to that data, either initialize *identifier-1* to spaces before the XML GENERATE statement or specify the COUNT IN phrase.

If the COUNT IN phrase is specified, *identifier-3* contains (after execution of the XML GENERATE statement) the total number of character positions (UTF-16 encoding units or bytes) that were generated. You can use *identifier-3* as a reference modification length field to refer to the part of *identifier-1* that contains the generated XML document.

After execution of the XML GENERATE statement, special register XML-CODE contains either zero, which indicates successful completion, or a nonzero exception code. For details, see *Handling XML GENERATE exceptions* in the *COBOL for Linux on x86 Programming Guide*.

The XML PARSE statement also uses special register XML-CODE. Therefore if you code an XML GENERATE statement in the processing procedure of an XML PARSE statement, save the value of XML-CODE before that XML GENERATE statement executes and restore the saved value after the XML GENERATE statement terminates.

A byte order mark is not generated for XML documents that have Unicode encoding.

Format conversion of elementary data

Elementary data items within *identifier-2* are converted in a sequence of several steps, some of them are optional as described below.

Conversion to character format:

Elementary data items are converted to character format depending on the type of the data item:

- Data items of category alphabetic, alphanumeric, alphanumeric-edited, DBCS, external floating-point, national, national-edited, and numeric-edited are not converted.
- Fixed-point numeric data items other than COMPUTATIONAL-5 (COMP-5) binary data items or binary data items compiled with the TRUNC(BIN) compiler option are converted as if they were moved to a numeric-edited item that has:
  - As many integer positions as the numeric item has, but with at least one integer position
  - An explicit decimal point, if the numeric item has at least one decimal position
  - The same number of decimal positions as the numeric item has
  - A leading '-' picture symbol if the data item is signed (has an S in its PICTURE clause)
- COMPUTATIONAL-5 (COMP-5) binary data items or binary data items compiled with the TRUNC(BIN) compiler option are converted in the same way as the other fixed-point numeric items, except for the number of integer positions. The number of integer positions is computed depending on the number of '9' symbols in the picture character string as follows:
  - 5 minus the number of decimal places, if the data item has 1 to 4 '9' picture symbols
  - 10 minus the number of decimal places, if the data item has 5 to 9 '9' picture symbols

  - 20 minus the number of decimal places, if the data item has 10 to 18 '9' picture symbols
- Internal floating-point data items are converted as if they were moved to a data item as follows:
  - For COMP-1: an external floating-point data item with PICTURE -9.9(8)E+99
  - For COMP-2: an external floating-point data item with PICTURE -9.9(17)E+99 (illegal because of the number of digit positions)
- Index data items are converted as if they were declared USAGE COMP-5 PICTURE S9(9).

Trimming:

After any conversion to character format, leading and trailing spaces and leading zeroes are eliminated, as described under "Trimming of generated XML data" on page 416.

Conversion to the document encoding:

All values are converted as necessary to the encoding of the document, as follows. If *identifier-1* is:

- Category alphanumeric, and either the NATIVE phrase was specified in the data description or CHAR(NATIVE) was in effect, values are converted to UTF-8 or to the chosen ASCII code page.
- Category alphanumeric, and the NATIVE phrase was not specified in the data description, and CHAR(EBCDIC) was in effect, values are converted to the chosen EBCDIC code page.
- Category national: Any nonnational values are converted to national format.

Conversion of special characters to XML references:

Any remaining instances of the five characters & (ampersand), ' (apostrophe), > (greater-than sign), < (less-than sign), and " (quotation mark) are converted into the equivalent XML references '&', ''', '>', '<', and '"', respectively.

Replacement of out-of-range Unicode characters:

Any remaining Unicode character that has a Unicode scalar value greater than x'FFFF' is replaced by an XML character reference. For example, if the document contains a character with Unicode scalar value x'10813', in UTF-16LE, that value is represented by the surrogate pair (NX'02D8', NX'13DC'), which is replaced by the reference '𐐓'. For a document encoding of UTF-8, the byte sequence that is equivalent to character reference '𐐓' is X'F090A093'.

Trimming of generated XML data

Trimming is performed on data values after their conversion to character format.

For more information about the conversion, see "Format conversion of elementary data" on page 415.

For values converted from signed numeric values, the leading space is removed if the value is positive.

For values converted from numeric items, leading zeroes (after any initial minus sign) up to but not including the digit immediately before the actual or implied decimal point are eliminated. Trailing zeroes after a decimal point are retained. For example:

- -012.340 becomes -12.340.
- 0000.45 becomes 0.45.
- 0013 becomes 13.
- 0000 becomes 0.

Character values from data items of class alphabetic, alphanumeric, DBCS, and national have either trailing or leading spaces removed, depending on whether the corresponding data items have left (default) or right justification, respectively. That is, trailing spaces are removed from values whose corresponding data items do not specify the JUSTIFIED clause. Leading spaces are removed from values whose data items do specify the JUSTIFIED clause. If a character value consists solely of spaces, one space remains as the value after trimming is finished.

XML element name and attribute name formation

In the XML documents that are generated from *identifier-2*, the XML element names and attribute names are obtained from the NAME phrase if specified; otherwise they are derived from the names of the data item specified by *identifier-2* and from any eligible data-names that are subordinate to *identifier-2*.

The formation of XML element name and attribute name is as follows:

- The exact mixed-case spelling of data-names from the data description entry is retained. The spellings from any references to data items (for example, in an OCCURS DEPENDING ON clause) are not used.
- Data-names that start with a digit are prefixed by an underscore. For example, the data-name '3D' becomes XML tag or attribute name '_3D'.
- Data-names that start with the characters 'xml', in any combination of uppercase and lowercase, are prefixed by an underscore. For example, the data-name 'Xml' becomes XML tag or attribute name '_Xml'.

Multibyte data-names, when translated to Unicode, must be legal as names in the XML specification, version 1.0. For details about the XML specification, see *XML specification*.

XML PARSE statement

The XML PARSE statement is the COBOL language interface to the high-speed XML parser that is part of the COBOL run time.

The XML PARSE statement parses an XML document into its individual pieces and passes each piece, one at a time, to a user-written processing procedure.

XML PARSE statements must not be specified in declarative procedures.

Format

```
►► XML PARSE ── identifier-1 ── PROCESSING PROCEDURE ──┬──────┬── procedure-name-1 ──►
                                                       └─ IS ─┘

►──┬──────────────────────────────────────────────────────────────────────────────────┬──►
   │                                                                                  │
   └──┬──────────────────────────────────────────────────────────────────────────────┬──┘
      │                                                                              │
      └──┬─────────────────────────────────────────────────────────────────────────┬──┘
         │                                                                         │
         └──┬──────────────────────────────────────────────────────────────────┬──┘
            │                                                                  │
            └──┬──────────────────────────────────────────────────────────┬──┘
               │                                                          │
               └──┬──────────────────────────────────────────────────┬──┘
                  │                                                  │
                  └──┬──────────────────────────────────────────┬──┘
                     │                                          │
                     └──┬──────────────────────────────────┬──┘
                        │                                  │
                        └──┬──────────────────────────┬──┘
                           │                          │
                           └──┬──────────────────┬──┘
                              │                  │
                              └──┬──────────────┬──┘
                                 │              │
                                 └──┬──────────┬──┘
                                    │          │
                                    └──┬──────┬──┘
                                       │      │
                                       └──┬──┬──┘
                                          │  │
                                          └──┬──────────────────────────────────────────────────────────────────────────────────┬──►
                                             │                                                                                  │
                                             └──┬──────────────────────────────────────────────────────────────────────────────┬──┘
                                                │                                                                              │
                                                └──┬─────────────────────────────────────────────────────────────────────────┬──┘
                                                   │                                                                         │
                                                   └──┬──────────────────────────────────────────────────────────────────┬──┘
                                                      │                                                                  │
                                                      └──┬──────────────────────────────────────────────────────────┬──┘
                                                         │                                                          │
                                                         └──┬──────────────────────────────────────────────────┬──┘
                                                            │                                                  │
                                                            └──┬──────────────────────────────────────────┬──┘
                                                               │                                          │
                                                               └──┬──────────────────────────────────┬──┘
                                                                  │                                  │
                                                                  └──┬──────────────────────────┬──┘
                                                                     │                          │
                                                                     └──┬──────────────────┬──┘
                                                                        │                  │
                                                                        └──┬──────────────┬──┘
                                                                           │              │
                                                                           └──┬──────────┬──┘
                                                                              │          │
                                                                              └──┬──────┬──┘
                                                                                 │      │
                                                                                 └──┬──┬──┘
                                                                                    │  │
THROUGH ── procedure-name-2
THRU ──┘

ON ── EXCEPTION ── imperative-statement-1

NOT ──┬──────────┬── EXCEPTION ── imperative-statement-2 ──┬──────────┬──►◄
      └─ ON ─┘                                            └─ END-XML ─┘
```

identifier-1

identifier-1 must be an elementary data item of category national, a national group, an elementary data item of category alphanumeric, or an alphanumeric group item. *identifier-1* cannot be a function-identifier. *identifier-1* contains the XML document character stream.

If *identifier-1* is a national group item, *identifier-1* is processed as an elementary data item of category national.

If *identifier-1* is of category national, its content must be encoded using Unicode UTF-16LE (CCSID 1200). *identifier-1* must not contain any character entities that are represented using multiple encoding units. Use a character reference to represent any such characters, for example:

- "񧘃" or

- "𐠓"

The letter x must be lowercase.

CHAR(NATIVE) and alphanumeric identifier-1

If *identifier-1* is alphanumeric and the CHAR(EBCDIC) compiler option is not in effect, the content of *identifier-1* must be encoded using UTF-8 Unicode or a single-byte ASCII code page that is supported by ICU conversion libraries (see *International Components for Unicode: Converter Explorer*).

To ensure that a document in such a data item is parsed in UTF-8 rather than ASCII:

- The code page for the runtime locale must be a UTF-8 locale, or
- The document must include an XML encoding declaration specifying UTF-8, or
- The document must start with a UTF-8 byte order mark.

UTF-8 documents must not contain any characters with a Unicode scalar value greater than x'FFFF'. Use a character reference for such characters.

If the XML document in such a data item does not specify an encoding declaration and does not start with a UTF-8 byte order mark, it is parsed with the code page indicated by the current runtime locale.

CHAR(EBCDIC) and alphanumeric identifier-1

If *identifier-1* is alphanumeric and the CHAR(EBCDIC) compiler option is in effect, the content of *identifier-1* must be encoded using a single-byte EBCDIC code page that is supported by ICU conversion libraries (see *International Components for Unicode: Converter Explorer*). If *identifier-1* is an elementary item, the NATIVE keyword must not be specified in its data description entry.

If the XML document in such a data item does not specify an encoding declaration, the XML document is parsed with the code page specified by the EBCDIC_CODEPAGE environment variable, or if the EBCDIC_CODEPAGE environment variable is not set, the default EBCDIC code page selected for the current runtime locale, as described in *Locales and code pages that are supported* in the *COBOL for Linux on x86 Programming Guide*.

Setting and using runtime locales and code pages

For more information about setting and using runtime locales and code pages, see *Locales and code pages that are supported* in the *COBOL for Linux on x86 Programming Guide*. The single-byte ASCII and EBCDIC code pages are those for which the column labeled Language group (the rightmost column) of the table Locales and code pages supported does not specify "Ideographic languages."

PROCESSING PROCEDURE phrase

Specifies the name of a procedure to handle the various events that the XML parser generates.

procedure-name-1, procedure-name-2

Must name a section or paragraph in the PROCEDURE DIVISION. *Procedure-name-1* and *procedure-name-2* must not name a procedure name in a declarative section.

procedure-name-1

Specifies the first (or only) section or paragraph in the processing procedure.

procedure-name-2

Specifies the last section or paragraph in the processing procedure.

For each XML event, the parser transfers control to the first statement of the procedure named *procedure-name-1*. Control is always returned from the processing procedure to the XML parser. The point from which control is returned is determined as follows:

- If *procedure-name-1* is a paragraph name and *procedure-name-2* is not specified, the return is made after the execution of the last statement of the *procedure-name-1* paragraph.
- If *procedure-name-1* is a section name and *procedure-name-2* is not specified, the return is made after the execution of the last statement of the last paragraph in the *procedure-name-1* section.
- If *procedure-name-2* is specified and it is a paragraph name, the return is made after the execution of the last statement of the *procedure-name-2* paragraph.

- If *procedure-name-2* is specified and it is a section name, the return is made after the execution of the last statement of the last paragraph in the *procedure-name-2* section.

The only necessary relationship between *procedure-name-1* and *procedure-name-2* is that they define a consecutive sequence of operations to execute, beginning at the procedure named by *procedure-name-1* and ending with the execution of the procedure named by *procedure-name-2*.

If there are two or more logical paths to the return point, then *procedure-name-2* can name a paragraph that consists of only an EXIT statement; all the paths to the return point must then lead to this paragraph.

The processing procedure consists of all the statements at which XML events are handled. The range of the processing procedure includes all statements executed by CALL, EXIT, GO TO, GOBACK, MERGE, PERFORM, and SORT statements that are in the range of the processing procedure, as well as all statements in declarative procedures that are executed as a result of the execution of statements in the range of the processing procedure.

The range of the processing procedure must not cause the execution of any GOBACK or EXIT PROGRAM statement, except to return control from a method or program to which control was passed by a CALL statement, respectively, that is executed in the range of the processing procedure.

The range of the processing procedure must not cause the execution of an XML PARSE statement, unless the XML PARSE statement is executed in a method or outermost program to which control was passed by a CALL statement that is executed in the range of the processing procedure.

A program executing on multiple threads can execute the same XML statement or different XML statements simultaneously.

The processing procedure can terminate the run unit with a STOP RUN statement.

For more details about the processing procedure, see “Control flow” on page 420.

ON EXCEPTION

The ON EXCEPTION phrase specifies imperative statements that are executed when the XML PARSE statement raises an exception condition.

An exception condition exists when the XML parser detects an error in processing the XML document. The parser first signals an XML exception by passing control to the processing procedure with special register XML-EVENT containing 'EXCEPTION'. The parser also provides a numeric error code in special register XML-CODE, as detailed in *Handling XML PARSE exceptions* in the *COBOL for Linux on x86 Programming Guide*.

An exception condition also exists if the processing procedure sets XML-CODE to -1 before returning to the parser for any normal XML event. In this case, the parser does not signal an EXCEPTION XML event and parsing is terminated.

If the ON EXCEPTION phrase is specified, the parser transfers control to *imperative-statement-1*. If the ON EXCEPTION phrase is not specified, the NOT ON EXCEPTION phrase, if any, is ignored and control is transferred to the end of the XML PARSE statement.

Special register XML-CODE contains the numeric error code for the XML exception or -1 after execution of the XML PARSE statement.

If the processing procedure handles the XML exception event and sets XML-CODE to zero before returning control to the parser, the exception condition no longer exists. If no other unhandled exceptions occur before termination of the parser, control is transferred to *imperative-statement-2* of the NOT ON EXCEPTION phrase, if specified.

NOT ON EXCEPTION

The NOT ON EXCEPTION phrase specifies imperative statements that are executed when no exception condition exists at the termination of XML PARSE processing.

If an exception condition does not exist at termination of XML PARSE processing, control is transferred to *imperative-statement-2* of the NOT ON EXCEPTION phrase, if specified. If the NOT ON EXCEPTION phrase is not specified, control is transferred to the end of the XML PARSE statement. The ON EXCEPTION phrase, if specified, is ignored.

Special register XML-CODE contains zero after execution of the XML PARSE statement.

END-XML phrase

This explicit scope terminator delimits the scope of XML GENERATE or XML PARSE statements. END-XML permits a conditional XML GENERATE or XML PARSE statement (that is, an XML GENERATE or XML PARSE statement that specifies the ON EXCEPTION or NOT ON EXCEPTION phrase) to be nested in another conditional statement.

The scope of a conditional XML GENERATE or XML PARSE statement can be terminated by:

- An END-XML phrase at the same level of nesting
- A separator period

END-XML can also be used with an XML GENERATE or XML PARSE statement that does not specify either the ON EXCEPTION or NOT ON EXCEPTION phrase.

For more information about explicit scope terminators, see "Delimited scope statements" on page 266.

Nested XML GENERATE or XML PARSE statements

When a given XML GENERATE or XML PARSE statement appears as *imperative-statement-1* or *imperative-statement-2*, or as part of *imperative-statement-1* or *imperative-statement-2* of another XML GENERATE or XML PARSE statement, that given XML GENERATE or XML PARSE statement is a *nested* XML GENERATE or XML PARSE statement.

Nested XML GENERATE or XML PARSE statements are considered to be matched XML GENERATE and END-XML, or XML PARSE and END-XML combinations proceeding from left to right. Thus, any END-XML phrase that is encountered is matched with the nearest preceding XML GENERATE or XML PARSE statement that has not been implicitly or explicitly terminated.

Control flow

When the XML parser receives control from an XML PARSE statement, the parser analyzes the XML document and transfers control at specific points in the process.

The points are:

- The start of the parsing process
- When a document fragment is found
- When the parser detects an error in parsing the XML document
- The end of processing the XML document

Control returns to the XML parser when the end of the processing procedure is reached.

The exchange of control between the parser and the processing procedure continues until either:

- The entire XML document has been parsed, ending with the END-OF-DOCUMENT event.
- The processing procedure terminates parsing deliberately by setting XML-CODE to -1 before returning to the parser.
- The parser detects an exception (other than an encoding conflict) and the processing procedure does not reset special register XML-CODE to zero before to returning to the parser.
- The parser detects an encoding conflict exception and the processing procedure does not reset special register XML-CODE to zero or to the CCSID of the document encoding.

In each case, the processing procedure returns control to the parser. Then, the parser terminates and returns control to the XML PARSE statement with the XML-CODE special register containing the most recent value set by the parser or -1 (which might have been set by the parser or by the processing procedure).

For each XML event passed to the processing procedure, the XML-CODE and XML-EVENT special registers contain information about the particular event. Special register XML-EVENT is set to the event name,

such as 'START-OF-DOCUMENT'. For most events, the XML-TEXT or XML-NTEXT special register contains document text. See “XML-EVENT” on page 26 for details.

The content of the XML-CODE special register is defined during and after execution of an XML PARSE statement. The contents of all other XML special registers are undefined outside the range of the processing procedure.

For normal XML events, special register XML-CODE contains zero when the processing procedure receives control. For XML exception events, XML-CODE contains an XML exception code as described in *XML PARSE exceptions that allow continuation* and *XML PARSE exceptions that do not allow continuation* in the *COBOL for Linux on x86 Programming Guide*.

For more information about the XML special registers, see:

- “XML-CODE” on page 25
- “XML-EVENT” on page 26
- “XML-NTEXT” on page 28
- “XML-TEXT” on page 28

For an introduction to special registers, see “Special registers” on page 17

For more information about the EXCEPTION event and exception processing, see *Handling XML PARSE exceptions* in the *COBOL for Linux on x86 Programming Guide*.

Part 7. Intrinsic functions

An *intrinsic function* is a function that performs a mathematical, character, or logical operation. You can use intrinsic functions to make reference to a data item whose value is derived automatically during execution.

Data processing problems often require the use of values that are not directly accessible in the data storage associated with the object program, but instead must be derived through performing operations on other data. An *intrinsic function* is a function that performs a mathematical, character, or logical operation, and thereby allows you to make reference to a data item whose value is derived automatically during execution.

The intrinsic functions can be grouped into six categories, based on the type of service performed:

- Mathematical
- Statistical
- Date/time
- Financial
- Character-handling
- General

You can reference a function by specifying its name, along with any required arguments, in a PROCEDURE DIVISION statement.

Functions are elementary data items, and return alphanumeric character, national character, numeric, or integer values, integer, boolean, or date-time values. Functions cannot serve as receiving operands.

© Copyright IBM Corp. 2021, 2025

Chapter 21. Specifying a function

This topic describes the general format of a function-identifier.

Format: Function-identifier

```
►► FUNCTION ── function-name-1 ──┬──────────────────────────────┬──►
                                 │   ┌──────────────────────┐   │
                                 │   ▼                      │   │
                                 └── ( ── argument-1 ── ) ──┘   │
                                                                │
►──┬──────────────────────┬──►◄
  │                      │
  └── reference-modifier ─┘
```

function-name-1
function-name-1 must be one of the intrinsic function names.

argument-1
argument-1 must be an identifier, a literal (other than a figurative constant), or an arithmetic expression that satisfies the argument requirements for the specified function.

argument-1 cannot be a windowed date field, except in the UNDATE intrinsic function.

reference-modifier
Can be specified only for functions of type alphanumeric or national.

A function-identifier can be specified wherever a data item of the type of the function is allowed. The argument to a function can be any function or an expression containing a function, including another evaluation of the same function, whose result meets the requirements for the argument.

Within a PROCEDURE DIVISION statement, each function-identifier is evaluated at the same time as any reference modification or subscripting associated with an identifier in that same position would be evaluated.

Function definition and evaluation

The class and characteristics of a function, and the number and types of arguments it requires, are determined by its function definition.

These characteristics include:

- For functions of type alphanumeric and national, the size of the returned value
- For functions of type numeric and integer, the sign of the returned value, and whether the function is integer
- The actual value returned by the function
- The length of the returned value for data-time functions

For some functions, the class and characteristics are determined by the arguments to the function.

The evaluation of any intrinsic function is not affected by the context in which it appears; in other words, function evaluation is not affected by operations or operands outside the function. However, evaluation of a function can be affected by the attributes of its arguments.

Within a PROCEDURE DIVISION statement, each function-identifier is evaluated at the same time as any reference modification or subscripting associated with an identifier in that same position would be evaluated.

© Copyright IBM Corp. 2021, 2025

Types of functions

The topic introduces types of functions in COBOL.

COBOL has the following types of functions:

- Alphanumeric
- Boolean
- Date-time
- DBCS
- National
- Numeric
- Integer

Alphanumeric functions are of class and category alphanumeric. The value returned has an implicit usage of DISPLAY without the NATIVE phrase. The number of character positions in the value returned is determined by the function definition.

Boolean functions are of class and category boolean. The value returned has an implicit usage of DISPLAY, and is either a boolean true (B"1") or a boolean false (B"0").

Date-time functions are of the class date-time and category date, time, or timestamp. The value returned has an implicit usage of DISPLAY. The number of character positions in the value returned is determined by the function definition.

DBCS functions are of the class and category DBCS. The value returned has an implicit usage of DISPLAY-1, and the number of character positions in the value returned is determined by the function definition.

National functions are of class and category national. The value returned has an implicit usage of NATIONAL and is represented in national characters (UTF-16). The number of character positions in the value returned is determined by the function definition.

Numeric functions are of class and category numeric. The returned value is always considered to have an operational sign and is a numeric intermediate result. For more information, see *Using numeric intrinsic functions* in the *COBOL for Linux on x86 Programming Guide*.

Integer functions are of class and category numeric. The returned value is always considered to have an operational sign and is an integer intermediate result. The number of digit positions in the value returned is determined by the function definition. For more information, see *Using numeric intrinsic functions* in the *COBOL for Linux on x86 Programming Guide*.

Rules for usage

The topic describes rules of using different types of functions.

Alphanumeric functions

An alphanumeric function can be specified anywhere in the general formats that a data item of class and category alphanumeric is permitted and where the rules associated with the general formats do not specifically prohibit reference to functions, except as noted below.

An alphanumeric function can be used as an argument for any function that allows an alphanumeric argument.

Reference modification of an alphanumeric function is allowed. If reference modification is specified for a function, the evaluation of the reference modification takes place immediately after the evaluation of the function; that is, the function's returned value is reference-modified.

An alphanumeric function cannot be used:

- As a receiving operand of any statement

- Where the rules associated with the general formats require the data item being referenced to have particular characteristics (such as class and category, usage, size, and permissible values) and the evaluation of the function according to its definition and the particular arguments specified would not have those characteristics

Boolean functions

A boolean function can be specified wherever a boolean identifier is permitted in the general formats, and wherever the rules associated with the general formats do not specifically prohibit reference to functions. However, it cannot be specified:

- As a receiving operand of any statement
- Where the rules associated with the general formats require the data item being referenced to have particular characteristics (such as class and category, usage, size, and permissible values), and the evaluation of the function according to its definition and the particular arguments specified would not have these characteristics

A boolean function is allowed as part of a relation condition. If a boolean function is specified in a relation condition, the evaluation of the relation condition takes place immediately after the evaluation of the function.

A boolean function can be referenced as an argument for a function that allows a boolean argument.

Date-time functions

A date-time function can be specified wherever a date-time identifier is permitted in the general formats, and wherever the rules associated with the general formats do not specifically prohibit reference to functions. However, it cannot be specified:

- As a receiving operand of any statement
- Where the rules associated with the general formats require the data item being referenced to have particular characteristics (such as class and category, usage, size, and permissible values), and the evaluation of the function according to its definition and the particular arguments specified would not have these characteristics

A date-time function is allowed as part of a relation condition. If a date-time function is specified in a relation condition, the evaluation of the relation condition takes place immediately after the evaluation of the function.

A date-time function can be referenced as an argument for a function that allows a date-time argument.

National functions

A national function can be specified anywhere in the general formats that a data item of class and category national is permitted and where the rules associated with the general formats do not specifically prohibit reference to functions, except as noted below.

A national function can be used as an argument for any function that allows a national argument.

Reference modification of a national function is allowed. If reference modification is specified for a function, the evaluation of the reference modification takes place immediately after the evaluation of the function; that is, the function's returned value is reference-modified.

A national function cannot be used:

- As a receiving operand of any statement
- Where the rules associated with the general formats require the data item being referenced to have particular characteristics (such as class and category, usage, size, and permissible values) and the evaluation of the function according to its definition and the particular arguments specified would not have those characteristics

Numeric functions

A numeric function can be used only where an arithmetic expression can be specified.

A numeric function can be referenced as an argument for a function that allows a numeric argument.

A numeric function cannot be used where an integer operand is required, even if the particular reference would yield an integer value. The INTEGER or INTEGER-PART functions can be used to force the type of a numeric argument to be an integer.

Integer functions
An integer function can be used only where an arithmetic expression can be specified.

An integer function can be referenced as an argument for a function that allows a numeric argument.

Usage notes:

- A function-identifier cannot be used in the BY REFERENCE phrase of a CALL statement (that is, *identifier-2* of the CALL statement must not be a function-identifier).
- The COPY statement accepts function-identifiers of all types in the REPLACING phrase.
- The MOVE statement accepts alphanumeric, numeric, integer, and national function-identifiers in the sending field (*identifier-1*).

Arguments

The value returned by some functions is determined by the arguments specified in the function-identifier when the functions are evaluated. Some functions require no arguments; others require a fixed number of arguments, and still others accept a variable number of arguments.

An argument must be one of the following items:

- A data item identifier
- An arithmetic expression
- A function-identifier
- A literal other than a figurative constant
- A special-register
- A mnemonic-name
- A keyword
- A type-name

See Chapter 22, “Function definitions,” on page 433 for function-specific argument specifications.

The types of arguments are:

Alphabetic
An elementary data item of the class alphabetic or an alphanumeric literal containing only alphabetic characters. The content of the argument is used to determine the value of the function. The length of the argument can be used to determine the value of the function.

Alphanumeric
A data item of the class alphabetic or alphanumeric or an alphanumeric literal. The content of the argument is used to determine the value of the function. The length of the argument can be used to determine the value of the function.

Boolean
A data item of class boolean, or a boolean literal.

Date-time
An data item of the class date-time. The content of the argument is used to determine the value of the function. The length of the argument can be used to determine the value of the function.

DBCS
An elementary data item of class DBCS or a DBCS literal. The content of the argument is used to determine the value of the function. The length of the argument can be used to determine the value of the function. (A DBCS data item or literal can be used as an argument only for the NATIONAL-OF function.)

Integer
An arithmetic expression that always results in an integer value. The value of the expression, including its sign, is used to determine the value of the function.

Keyword
A keyword should be specified in accordance with the function definition.

Mnemonic-Name
A mnemonic-name defined in the SPECIAL-NAMES paragraph shall be specified. The feature associated with the mnemonic-name may be used in determining the value of the function.

National
A data item of class national (category national, national-edited, or numeric-edited). The content of the argument is used to determine the value of the function. The length of the argument can be used to determine the value of the function.

Numeric
An arithmetic expression. The expression can include numeric literals and data items of categories numeric, internal floating-point, and external floating-point. The numeric data items can have any usage permitted for the category of the data item (including NATIONAL). The value of the expression, including its sign, is used to determine the value of the function.

Special-Register
A special-register should be specified in accordance with the function definition. The information associated with the special-register may be used in determining the value of the function.

Type Declaration
A type-name shall be specified. The size associated with the type declaration may be used in determining the value of the function.

Some functions place constraints on their arguments, such as the acceptable range of values. If the values assigned as arguments for a function do not comply with specified constraints, the returned value is undefined.

If a nested function is used as an argument, the evaluation of its arguments is not affected by the arguments in the outer function.

Only those arguments at the same function level interact with each other. This interaction occurs in two areas:

- The computation of an arithmetic expression that appears as a function argument is affected by other arguments for that function.
- The evaluation of the function takes into consideration the attributes of all of its arguments.

When a function is evaluated, its arguments are evaluated individually in the order specified in the list of arguments, from left to right. The argument being evaluated can be a function-identifier or an expression that includes function-identifiers.

If an arithmetic expression is specified as an argument and if the first operator in the expression is a unary plus or a unary minus, the expression must be immediately preceded by a left parenthesis.

Floating-point literals are allowed wherever a numeric argument is allowed and in arithmetic expressions used in functions that allow a numeric argument.

Internal floating-point items and external floating-point items (both display floating-point and national floating-point) can be used wherever a numeric argument is allowed and in arithmetic expressions as arguments to a function that allows a numeric argument.

Floating-point items and floating-point literals *cannot* be used where an integer argument is required or where an argument of class alphanumeric or national is required (such as in the LOWER-CASE, REVERSE, UPPER-CASE, NUMVAL, and NUMVAL-C functions).

Examples

See examples of using different types of intrinsic functions.

The following statement illustrates the use of intrinsic function UPPER-CASE to replace each lowercase letter in an alphanumeric argument with the corresponding uppercase letter.

```
MOVE FUNCTION UPPER-CASE('hello') TO DATA-NAME.
```

This statement moves `HELLO` into `DATA-NAME`.

The following statement illustrates the use of intrinsic function LOWER-CASE to replace each uppercase letter in a national argument with the corresponding lowercase letter.

```
MOVE FUNCTION LOWER-CASE(N'HELLO') TO N-DATA-NAME.
```

This statement moves national characters `hello` into `N-DATA-NAME`.

The following statement illustrates the use of a numeric intrinsic function:

```
COMPUTE NUM-ITEM = FUNCTION SUM(A B C)
```

This statement uses the numeric function SUM to add the values of A, B, and C and places the result in `NUM-ITEM`.

ALL subscripting

When a function allows an argument to be repeated a variable number of times, you can refer to a table by specifying the data-name and any qualifiers that identify the table. This can be followed immediately by subscripting where one or more of the subscripts is the word ALL.

Tip: The evaluation of an ALL subscript must result in at least one argument or the value returned by the function will be undefined; however, the situation can be diagnosed at run time by specifying the SSRANGE compiler option and the CHECK runtime option.

Specifying ALL as a subscript is equivalent to specifying all table elements possible using every valid subscript in that subscript position.

For a table argument specified as `Table-name(ALL)`, the order of the implicit specification of each table element as an argument is from left to right, where the first (or leftmost) argument is `Table-name(1)` and ALL has been replaced by 1. The next argument is `Table-name(2)`, where the subscript has been incremented by 1. This process continues, with the subscript being incremented by 1 to produce an implicit argument, until the ALL subscript has been incremented through its range of values.

For example,

```
FUNCTION MAX(Table(ALL))
```

is equivalent to

```
FUNCTION MAX(Table(1) Table(2) Table(3) ... Table(n))
```

where *n* is the number of elements in Table.

If there are multiple ALL subscripts, `Table-name(ALL, ALL, ALL)`, the first implicit argument is `Table-name(1, 1, 1)`, where each ALL has been replaced by 1. The next argument is `Table-name(1, 1, 2)`, where the rightmost subscript has been incremented by 1. The subscript represented by the rightmost ALL is incremented through its range of values to produce an implicit argument for each value.

Once a subscript specified as ALL has been incremented through its range of values, the next subscript to the left that is specified as ALL is incremented by 1. Each subscript specified as ALL to the right of the newly incremented subscript is set to 1 to produce an implicit argument. Once again, the subscript represented by the rightmost ALL is incremented through its range of values to produce an implicit argument for each value. This process is repeated until each subscript specified as ALL has been incremented through its range of values.

For example,

```
FUNCTION MAX(Table(ALL, ALL))
```

is equivalent to

```
FUNCTION MAX(Table(1, 1) Table(1, 2) Table(1, 3) ... Table(1, n)
             Table(2, 1) Table(2, 2) Table(2, 3) ... Table(2, n)
             Table(3, 1) Table(3, 2) Table(3, 3) ... Table(3, n)
             ...
             Table(m, 1) Table(m, 2) Table(m, 3) ... Table(m, n))
```

where *n* is the number of elements in the column dimension of `Table`, and *m* is the number of elements in the row dimension of `Table`.

ALL subscripts can be combined with literal, data-name, or index-name subscripts to reference multidimensional tables.

For example,

```
FUNCTION MAX(Table(ALL, 2))
```

is equivalent to

```
FUNCTION MAX(Table(1, 2)
             Table(2, 2)
             Table(3, 2)
             ...
             Table(m, 2))
```

where *m* is the number of elements in the row dimension of `Table`.

If an ALL subscript is specified for an argument and the argument is reference-modified, then the reference-modifier is applied to each of the implicitly specified elements of the table.

If an ALL subscript is specified for an operand that is reference-modified, the reference-modifier is applied to each of the implicitly specified elements of the table.

If the ALL subscript is associated with an OCCURS DEPENDING ON clause, the range of values is determined by the object of the OCCURS DEPENDING ON clause.

For example, given a payroll record definition such as:

```
01 PAYROLL.
   02 PAYROLL-WEEK   PIC 99.
   02 PAYROLL-HOURS  PIC 999 OCCURS 1 TO 52
        DEPENDING ON PAYROLL-WEEK.
```

The following COMPUTE statements could be used to identify total year-to-date hours, the maximum hours worked in any week, and the specific week corresponding to the maximum hours:

```
COMPUTE YTD-HOURS = FUNCTION SUM (PAYROLL-HOURS(ALL))
COMPUTE MAX-HOURS = FUNCTION MAX (PAYROLL-HOURS(ALL))
COMPUTE MAX-WEEK  = FUNCTION ORD-MAX (PAYROLL-HOURS(ALL))
```

In these function invocations, the subscript ALL is used to reference all elements of the PAYROLL-HOURS array (depending on the execution time value of the PAYROLL-WEEK field).

Chapter 22. Function definitions

This section provides an overview of the argument type, function type, and value returned for each of the intrinsic functions.

For more information about the intrinsic functions, see Table 59 on page 434.

Argument types and function types are abbreviated as follows:

Abbreviation	Meaning
A	Alphabetic
B	Boolean
D	DBCS
DA	Date-time
I	Integer
IX	Index
K	Keyword
M	Mnemonic-name
N	Numeric
O	Other, as specified in the function definition (pointer, function-pointer, or procedure-pointer)
P	Pointer
S	Special-register
T	Type-name
U	National
X	Alphanumeric

The behavior of functions marked"DP" depends on whether the DATEPROC or NODATEPROC compiler option is in effect.

If the DATEPROC compiler option is in effect, the following intrinsic functions return date fields:

Function	Returned value has implicit DATE FORMAT
DATE-OF-INTEGER	YYYYXXXX
DATE-TO-YYYYMMDD	YYYYXXXX
DAY-OF-INTEGER	YYYYXXX
DAY-TO-YYYYDDD	YYYYXXX
YEAR-TO-YYYY	YYYY
DATEVAL	Depends on the format specified by DATEVAL
YEARWINDOW	YYYY

If the NODATEPROC compiler option is in effect:

© Copyright IBM Corp. 2021, 2025

- The following intrinsic functions return the same values as when DATEPROC is in effect, but their returned values are nondates:
  - DAY-OF-INTEGER
  - DATE-TO-YYYYMMDD
  - DAY-TO-YYYYDDD
  - YEAR-TO-YYYY
- The DATEVAL and UNDATE intrinsic functions have no effect, and simply return their (first) arguments unchanged.
- The YEARWINDOW intrinsic function returns 0 unconditionally.

Each intrinsic function is described in detail in the topics that follow the table below.

Table 59. ***Table of functions***

Function name	Arguments	Function type	Value returned
ACOS	N1	N	Arccosine of N1
ADD-DURATION	DA1, K2, I3	DA	A date-time item with the duration added
ANNUITY	N1, I2	N	Ratio of annuity paid for I2 periods at interest of N1 to initial investment of one
ASIN	N1	N	Arcsine of N1
ATAN	N1	N	Arctangent of N1
CHAR	I1	X	Character in position I1 of program collating sequence
COS	N1	N	Cosine of N1
CURRENT-DATE	None	X	Current date and time and difference from Greenwich mean time
CONVERT-DATE-TIME	DA1 or X1 or I1, K2, X3 or K3 or S3, M4 or S4	DA	Converted date-time item
DATE-OF-INTEGER[DP]	I1	I	Standard date equivalent (YYYYMMDD) of integer date
DATE-TO-YYYYMMDD[DP]	I1, I2	I	Standard date equivalent (YYYYMMDD) of I1 (standard date with a windowed year, YYMMDD), according to the 100-year interval whose ending year is specified by the sum of I2 and the year at execution time
DATEVAL[DP]	I1	I	Date field equivalent of I1
	X1	X	Date field equivalent of X1
DAY-OF-INTEGER[DP]	I1	I	Julian date equivalent (YYYYDDD) of integer date
DAY-TO-YYYYDDD[DP]	I1, I2	I	Julian date equivalent (YYYYDDD) of I1 (Julian date with a windowed year, YYDDD), according to the 100-year interval whose ending year is specified by the sum of I2 and the year at execution time

*Table 59. **Table of functions** (continued)*			
Function name	**Arguments**	**Function type**	**Value returned**
DISPLAY-OF	U1 or U1, I2, or U1, X2, or D2	X	Each character in U1 converted to a corresponding character representation using a code page identified by I2, if specified, or the code page specified by the runtime locale if I2 is unspecified
EXTRACT-DATE-TIME	DA1, X2, or K2	I or X	Part of an extracted date, time, or timestamp item
FACTORIAL	I1	I	Factorial of I1
FIND-DURATION	DA1, DA2, or K3	I	The integer duration between 2 date-time items
INTEGER	N1	I	The greatest integer not greater than N1
INTEGER-OF-DATE	I1	I	Integer date equivalent of standard date (YYYYMMDD)
INTEGER-OF-DAY	I1	I	Integer date equivalent of Julian date (YYYYDDD)
INTEGER-PART	N1	I	Integer part of N1
LENGTH	A1, B1, D1, DA1, IX1, N1, O1, P1, T1, X1, or U1	I	Length of argument in national character positions or in alphanumeric character positions or bytes, depending on the argument type
LOG	N1	N	Natural logarithm of N1
LOG10	N1	N	Logarithm to base 10 of N1
LOWER-CASE	A1 or X1	X	All letters in the argument set to lowercase
	U1	U	All letters in the argument set to lowercase
MAX	A1...	X	Value of maximum argument; note that the type of function depends on the arguments
	I1...	I	Value of maximum argument; note that the type of function depends on the arguments
	N1...	N	Value of maximum argument; note that the type of function depends on the arguments
	X1...	X	Value of maximum argument; note that the type of function depends on the arguments
	U1...	U	Value of maximum argument; note that the type of function depends on the arguments
MEAN	N1...	N	Arithmetic mean of arguments
MEDIAN	N1...	N	Median of arguments
MIDRANGE	N1...	N	Mean of minimum and maximum arguments

*Table 59. **Table of functions** (continued)*			
Function name	**Arguments**	**Function type**	**Value returned**
MIN	A1...	X	Value of minimum argument; note that the type of function depends on the arguments
	I1...	I	Value of minimum argument; note that the type of function depends on the arguments
	N1...	N	Value of minimum argument; note that the type of function depends on the arguments
	X1...	X	Value of minimum argument; note that the type of function depends on the arguments
	U1...	U	Value of minimum argument; note that the type of function depends on the arguments
MOD	I1, I2	I	I1 modulo I2
NATIONAL-OF	A1, X1, or D1	U	The characters in the argument converted to national characters, using the code page identified by I2, if specified, or a code page specified by the runtime locale if I2 is unspecified
	A1, X1, or D1; I2	U	The characters in the argument converted to national characters, using the code page identified by I2, if specified, or a code page specified by the runtime locale if I2 is unspecified
	A1 or X1 or D1, U2	U	The characters in the argument converted to national characters, using the code page identified by I2, if specified, or a code page specified by the runtime locale if I2 is unspecified
NUMVAL	X1 or U1	N	Numeric value of simple numeric string
NUMVAL-C	X1 or U1; X1, X2; U1, U2	N	Numeric value of numeric string with optional commas and currency sign
ORD	A1 or X1	I	Ordinal position of the argument in collating sequence
ORD-MAX	A1..., N1..., X1..., or U1...	I	Ordinal position of maximum argument
ORD-MIN	A1..., N1..., X1..., or U1...	I	Ordinal position of minimum argument
PRESENT-VALUE	N1, N2...	N	Present value of a series of future period-end amounts, N2, at a discount rate of N1
RANDOM	I1, none	N	Random number

*Table 59. **Table of functions** (continued)*			
Function name	**Arguments**	**Function type**	**Value returned**
RANGE	I1...	I	Value of maximum argument minus value of minimum argument; note that the type of function depends on the arguments.
	N1...	N	Value of maximum argument minus value of minimum argument; note that the type of function depends on the arguments.
REM	N1, N2	N	Remainder of N1/N2
REVERSE	A1 or X1	X	Reverse order of the characters of the argument
	U1	U	Reverse order of the characters of the argument
SIN	N1	N	Sine of N1
SQRT	N1	N	Square root of N1
STANDARD-DEVIATION	N1...	N	Standard deviation of arguments
SUBTRACT-DURATION	DA1, K2, I3	DA	A date-time item with the duration subtracted
SUM	I1...	I	Sum of arguments; note that the type of function depends on the arguments.
	N1...	N	Sum of arguments; note that the type of function depends on the arguments.
TAN	N1	N	Tangent of N1
TEST-DATE-TIME	DA1 or X1 or I1, K2, X3 or K3 or S3, M4 or S4	B	True (B"1") if valid date-time item, otherwise false
TRIM	A1 or X1	X	String with left and right blanks or specified characters trimmed
	A1, A2 or X1, X2		String with left and right blanks or specified characters trimmed
	D2 or D1, D2	D	String with left and right blanks or specified characters trimmed
	NL1 or NL1, NL2	NL	String with left and right blanks or specified characters trimmed
TRIML	A1 or X1	X	String with left blanks or specified characters trimmed
	A1, A2 or X1, X2		String with left blanks or specified characters trimmed
	D1 or D1, D2	D	String with left blanks or specified characters trimmed
	NL1 or NL1, NL2	NL	String with left blanks or specified characters trimmed

*Table 59. **Table of functions** (continued)*			
Function name	**Arguments**	**Function type**	**Value returned**
TRIMR	A1 or X1	X	String with right blanks or specified characters trimmed
	A1, A2 or X1, X2		String with right blanks or specified characters trimmed
	D1 or D1, D2	D	String with right blanks or specified characters trimmed
	NL1 or NL1, NL2	NL	String with right blanks or specified characters trimmed
UNDATE[DP]	I1	I	Nondate equivalent of date field I1 or X1
	X1	X	Nondate equivalent of date field I1 or X1
UPPER-CASE	A1 or X1	X	All letters in the argument set to uppercase
	U1	U	All letters in the argument set to uppercase
UTF8STRING	A1, X1, D1, or NL1	A	Variable length UTF-8 string
VARIANCE	N1...	N	Variance of arguments
WHEN-COMPILED	None	X	Date and time when program was compiled
YEAR-TO-YYYY[DP]	I1, I2	I	Expanded year equivalent (YYYY) of I1 (windowed year, YY), according to the 100-year interval whose ending year is specified by the sum of I2 and the year at execution time
YEARWINDOW[DP]	None	I	If the DATEPROC compiler option is in effect, returns the starting year (in the format YYYY) of the century window specified by the YEARWINDOW compiler option; if NODATEPROC is in effect, returns 0

Chapter 23. ACOS

The ACOS function returns a numeric value in radians that approximates the arccosine of the argument specified.

The function type is numeric.

Format

```
►►─ FUNCTION ACOS ──┬─( ── argument-1 ── )─┬─►◄
```

argument-1

Must be class numeric. The value of *argument-1* must be greater than or equal to -1 and less than or equal to +1.

The returned value is the approximation of the arccosine of the argument and is greater than or equal to zero and less than or equal to Pi.

© Copyright IBM Corp. 2021, 2025

Chapter 24. ADD-DURATION

The ADD-DURATION function adds a duration to a date, time, or timestamp item, and returns the modified item.

The function type is date-time.

The length of the returned value depends on the length of the date, time, or timestamp item specified in *argument-1*. The returned value will be truncated to the length of *argument-1*.

If a duration is added to a date item, the date returned must fall within a certain range:

- For 4-digit dates, the range must be 0001/01/01 through 9999/12/31
- For 2-digit dates, the range must be 0001/01/01 through 9999/12/31, but the year is truncated to 2 digits
- For a 3-digit year (a 1-digit century and a 2-digit year), the range must be 1900/01/01 through 2899/12/31 (the default). This range can be changed by specifying the DATETIME compiler option.

If a duration is added to a 2-digit date item, the range is the same as for a 4-digit year, but the year in the value returned is truncated to 2 digits.

Format

```
►► FUNCTION ADD-DURATION ── ( ── argument-1 ──┬──┬── argument-2 ── argument-3 ──┬── ) ──►◄
                                               ◄──┘                              ◄──┘
```

argument-1

Must be date, time, or timestamp data item.

argument-1 is a data item containing a value to which a duration is added. The duration is specified in *argument-2* and *argument-3*.

argument-2

argument-2 is a keyword that represents a duration. The valid duration keywords are:

- YEARS
- MONTHS
- DAYS
- HOURS
- MINUTES
- SECONDS
- MICROSECONDS
- PICOSECONDS

The duration keyword must be consistent with *argument-1*. For example, the duration keywords most obey the following rules:

1. YEARS, MONTHS, and DAYS can only be added to a date or timestamp item.
2. HOURS, MINUTES, SECONDS, and MICROSECONDS can only be added to a time or timestamp item.
3. PICOSECONDS can only be added to a timestamp item.

argument-3

Must be an integer arithmetic expression. *argument-3* is the number of units of the duration, as specified in *argument-2*, that are to be added to *argument-1*.

© Copyright IBM Corp. 2021, 2025

argument-3 can be a negative integer, but the function only takes its absolute value. If *argument-3* is longer than 9 digits, it is truncated.

argument-2 and *argument-3* can be repeated. There should be no duplicate *argument-2* in one intrinsic function.

If a duration is added to a date, and the result is invalid, the date is adjusted. For example, if a duration of 1 month is added to the date `March 31, 1997`, the result would be the invalid date `April 31, 1997`. This date would be adjusted to the valid date `April 30, 1997`.

Examples

The following examples show how the ADD-DURATION intrinsic function can be used:

```
MOVE FUNCTION ADD-DURATION (date-3 MONTHS 1)
     TO  date-2.
MOVE FUNCTION ADD-DURATION (date-3 MONTHS int-1 * 2)
     TO  date-1.
MOVE FUNCTION ADD-DURATION (date-1  YEARS 1 MONTHS 5 DAYS 23)
     TO date-2.
```

Related references

Chapter 69, “SUBTRACT-DURATION,” on page 531

Chapter 25. ANNUITY

The ANNUITY function returns a numeric value that approximates the ratio of an annuity paid at the end of each period, for a given number of periods, at a given interest rate, to an initial value of one.

The number of periods is specified by *argument-2*; the rate of interest is specified by *argument-1*. For example, if *argument-1* is zero and *argument-2* is four, the value returned is the approximation of the ratio 1 / 4.

The function type is numeric.

Format

```
►► FUNCTION ANNUITY ── ( ── argument-1 ── argument-2 ── ) ─►◄
```

argument-1
Must be class numeric. The value of *argument-1* must be greater than or equal to zero.

argument-2
Must be a positive integer.

When the value of *argument-1* is zero, the value returned by the function is the approximation of:

1 / *argument-2*

When the value of *argument-1* is not zero, the value of the function is the approximation of:

argument-1 / (1 - (1 + *argument-1*) ** (- *argument-2*))

© Copyright IBM Corp. 2021, 2025

Chapter 26. ASIN

The ASIN function returns a numeric value in radians that approximates the arcsine of the argument specified.

The function type is numeric.

Format

```
►► FUNCTION ASIN ── ( ── argument-1 ── ) ►◄
```

argument-1

Must be class numeric. The value of *argument-1* must be greater than or equal to -1 and less than or equal to +1.

The returned value is the approximation of the arcsine of *argument-1* and is greater than or equal to -Pi/2 and less than or equal to +Pi/2.

© Copyright IBM Corp. 2021, 2025

Chapter 27. ATAN

The ATAN function returns a numeric value in radians that approximates the arctangent of the argument specified.

The function type is numeric.

Format

```
►►─ FUNCTION ATAN ──┬─( ── argument-1 ── )─┬─►◄
```

argument-1
Must be class numeric.

The returned value is the approximation of the arctangent of *argument-1* and is greater than -Pi/2 and less than +Pi/2.

© Copyright IBM Corp. 2021, 2025

Chapter 28. CHAR

The CHAR function returns a one-character alphanumeric value that is a character in the program collating sequence having the ordinal position equal to the value of the argument specified.

The function type is alphanumeric.

Format

```
►►─ FUNCTION CHAR ── ( ── argument-1 ── ) ─►◄
```

argument-1

Must be an integer. The value must be greater than zero and less than or equal to the number of positions in the collating sequence associated with alphanumeric data items (a maximum of 256).

If more than one character has the same position in the program collating sequence, the character returned as the function value is that of the first literal specified for that character position in the ALPHABET clause.

If the current program collating sequence was not specified by an ALPHABET clause, the COLLSEQ compiler option indicates the collating sequence used. For example, if COLLSEQ(EBCDIC) is specified and the PROGRAM COLLATING SEQUENCE is not specified (or is NATIVE), the EBCDIC collating sequence is applied. (See “Conditional expressions” on page 240.)

© Copyright IBM Corp. 2021, 2025

Chapter 29. CONVERT-DATE-TIME

The CONVERT-DATE-TIME function takes an item of class alphanumeric, numeric, or date-time and returns a date-time item.

The function type is date-time.

The length of the returned value depends on the length allowed for the format of the date, time, or timestamp item specified in *argument-2* through *argument-4*.

Format

```
►► FUNCTION CONVERT-DATE-TIME ── ( ── argument-1 ── argument-2 ──►
   ►──┬──────────────────────────────────────┬── ) ──►◄
      └── argument-3 ──┬──────────────────┬──┘
                       └── argument-4 ────┘
```

argument-1
Can be:

- A date, time, or timestamp item
- An item of class alphanumeric
- A non-numeric literal
- An item of class numeric integer

argument-2
Specifies the category of the return value and must be one of the following keywords:

- DATE
- TIME
- TIMESTAMP

If *argument-1* is a date, time, or timestamp item, CONVERT-DATE-TIME can only convert:

- A date to a date, or a timestamp
- A time to a time, or a timestamp
- A timestamp to a date, a time, or a timestamp

If *argument-2* is TIMESTAMP, *argument-3* can only be specified with FORMAT OF special register, and *argument-4* cannot be specified.

If *argument-1* is a date-time item, a date-time move is done.

If *argument-1* is a numeric integer, the returned date-time item will be right-justified and truncated, if it is longer than what is allowed by the date-time format specified in *argument-3*.

If *argument-1* is anything else, the returned date-time item will be left-justified and truncated, if it is longer than what is allowed by the date-time format specified in *argument-3*.

argument-3
Specifies the format of a date or time item. It must be:

- A nonnumeric literal at least 2 characters long
- The keyword LOCALE
- The FORMAT OF special register

© Copyright IBM Corp. 2021, 2025

For a list of valid literals and the rules that this argument must follow, refer to the SPECIAL-NAMES FORMAT clause described in "FORMAT clause" on page 102.

argument-3 should represent a category that is referred to by *argument-2*.

If *argument-3* is the keyword LOCALE, then the format of the date or time is based on a LOCALE. If *argument-4* is not specified, the current locale is used, otherwise the locale associated with the mnemonic-name or the LOCALE OF special register is used.

If *argument-3* is not specified, the format of the returned value is dependent on the SPECIAL-NAMES FORMAT clause. If no format has been defined in the SPECIAL-NAMES paragraph, *ISO format is used. For TIMESTAMP, if *argument-3* is not specified, the default format of @Y-%m-%d-%H%M%S.@Sm is used.

argument-4

Must be a mnemonic-name associated with a LOCALE, or the LOCALE OF special register.

argument-4 must follow these rules:

- If *argument-4* is specified and *argument-3* is a locale-based format literal, for example contains %p, then the locale-based format literal would use the locale specified in *argument-4* to determine the actual value of the conversion specifiers.
- If *argument-3* is a locale-based format literal (for example, contains %p) and *argument-4* is not specified, the locale-based format literal would use the current locale to determine the actual value of the conversion specifiers.
- If *argument-3* is a locale-based format literal (for example, contains %p), and the LOCALE OF special register is used to refer to a non-locale item, the locale-based format literal would use the default locale to determine the actual value of the conversion specifiers.

Examples

The following examples show how the CONVERT-DATE-TIME intrinsic function can be used:

```
MOVE FUNCTION CONVERT-DATE-TIME ('95/05/30' DATE)
     TO  date-1.
MOVE FUNCTION CONVERT-DATE-TIME
     ('95/05/30' DATE '%y/%m/%d')
     TO  date-1.
MOVE FUNCTION CONVERT-DATE-TIME
     ('95/05/30' DATE '%y/%m/%d' my-locale)
     TO  date-1.
MOVE FUNCTION CONVERT-DATE-TIME
     ('95/05/30' DATE LOCALE my-locale)
     TO  date-1.
```

Chapter 30. COS

The COS function returns a numeric value that approximates the cosine of the angle or arc specified by the argument in radians.

The function type is numeric.

Format

```
►►─ FUNCTION COS ── ( ── argument-1 ── ) ─►◄
```

argument-1
Must be class numeric.

The returned value is the approximation of the cosine of the argument and is greater than or equal to -1 and less than or equal to +1.

© Copyright IBM Corp. 2021, 2025

Chapter 31. CURRENT-DATE

The CURRENT-DATE function returns a 21-character alphanumeric value that represents the calendar date, time of day, and time differential from Greenwich mean time provided by the system on which the function is evaluated.

The function type is alphanumeric.

Format

```
►►─ FUNCTION CURRENT-DATE ─►◄
```

Reading from left to right, the 21 character positions of the returned value are as follows:

Character positions	Contents
1-4	Four numeric digits of the year in the Gregorian calendar
5-6	Two numeric digits of the month of the year, in the range 01 through 12
7-8	Two numeric digits of the day of the month, in the range 01 through 31
9-10	Two numeric digits of the hours past midnight, in the range 00 through 23
11-12	Two numeric digits of the minutes past the hour, in the range 00 through 59
13-14	Two numeric digits of the seconds past the minute, in the range 00 through 59
15-16	Two numeric digits of the hundredths of a second past the second, in the range 00 through 99. The value 00 is returned if the system on which the function is evaluated does not have the facility to provide the fractional part of a second.
17	Either the character '-' or the character '+'. The character '-' is returned if the local time indicated in the previous character positions is behind Greenwich mean time. The character '+' is returned if the local time indicated is the same as or ahead of Greenwich mean time. The character '0' is returned if the system on which this function is evaluated does not have the facility to provide the local time differential factor.
18-19	If character position 17 is '-', two numeric digits are returned in the range 00 through 12 indicating the number of hours that the reported time is behind Greenwich mean time. If character position 17 is '+', two numeric digits are returned in the range 00 through 13 indicating the number of hours that the reported time is ahead of Greenwich mean time. If character position 17 is '0', the value 00 is returned.
20-21	Two numeric digits are returned in the range 00 through 59 indicating the number of additional minutes that the reported time is ahead of or behind Greenwich mean time, depending on whether character position 17 is '+' or '-', respectively. If character position 17 is '0', the value 00 is returned.

Example

Given the current operating environment timestamp is "1995-02-15 05:14:27.812479168304" Eastern Standard Time, FUNCTION CURRENT-DATE returns a 21-character alphanumeric field that can be used as follows:

© Copyright IBM Corp. 2021, 2025

```
WORKING-STORAGE SECTION.
01  WS-CURRENT-DATE-FIELDS.
    05  WS-CURRENT-DATE.
        10  WS-CURRENT-YEAR    PIC  9(4).
        10  WS-CURRENT-MONTH   PIC  9(2).
        10  WS-CURRENT-DAY     PIC  9(2).
    05  WS-CURRENT-TIME.
        10  WS-CURRENT-HOUR    PIC  9(2).
        10  WS-CURRENT-MINUTE  PIC  9(2).
        10  WS-CURRENT-SECOND  PIC  9(2).
        10  WS-CURRENT-MS      PIC  9(2).
    05  WS-DIFF-FROM-GMT       PIC S9(4).
PROCEDURE DIVISION.
    MOVE FUNCTION CURRENT-DATE TO WS-CURRENT-DATE-FIELDS
```

WS-CURRENT-DATE-FIELDS contains "1995021505142781-0500".

For more information, see *Examples: numeric intrinsic functions* in the *COBOL for Linux on x86 Programming Guide*.

Chapter 32. DATE-OF-INTEGER

The DATE-OF-INTEGER function converts a date in the Gregorian calendar from integer date form to standard date form (YYYYMMDD).

The function type is integer.

The function result is an eight-digit integer.

If the DATEPROC compiler option is in effect, the returned value is an expanded date field with implicit DATE FORMAT YYYYXXXX.

Format

```
►► FUNCTION DATE-OF-INTEGER ── ( ── argument-1 ── ) ►◄
```

argument-1

A positive integer that represents a number of days succeeding December 31, 1600, in the Gregorian calendar. The valid range is 1 to 3,067,671, which corresponds to dates ranging from January 1, 1601 thru December 31, 9999.

The returned value represents the International Standards Organization (ISO) standard date equivalent to the integer specified as *argument-1*.

The returned value is an integer of the form YYYYMMDD where YYYY represents a year in the Gregorian calendar; MM represents the month of that year; and DD represents the day of that month.

© Copyright IBM Corp. 2021, 2025

Chapter 33. DATE-TO-YYYYMMDD

The DATE-TO-YYYYMMDD function converts *argument-1* from a date with a two-digit year (YYnnnn) to a date with a four-digit year (YYYYnnnn). *argument-2*, when added to the year at the time of execution, defines the ending year of a 100-year interval, or sliding century window, into which the year of *argument-1* falls.

The function type is integer.

If the DATEPROC compiler option is in effect, the returned value is an expanded date field with implicit DATE FORMAT YYYYXXXX.

Format

```
►► FUNCTION DATE-TO-YYYYMMDD ── ( ── argument-1 ──┬──────────────┬── ) ──►◄
                                                 └── argument-2 ─┘
```

argument-1
Must be zero or a positive integer less than 991232.

Note: The COBOL run time does not verify that the value is a valid date.

argument-2
Must be an integer. If *argument-2* is omitted, the function is evaluated assuming the value 50 was specified.

The sum of the year at the time of execution and the value of *argument-2* must be less than 10,000 and greater than 1,699.

See the following examples with returned values from the DATE-TO-YYYYMMDD function:

Current year	***argument-1* value**	***argument-2* value**	**Returned value**
2002	851003	120	20851003
2002	851003	-20	18851003
2002	851003	10	19851003
1994	981002	-10	18981002

© Copyright IBM Corp. 2021, 2025

Chapter 34. DATEVAL

The DATEVAL function converts a nondate to a date field, for unambiguous use with date fields.

If the DATEPROC compiler option is in effect, the returned value is a date field containing the value of *argument-1* unchanged. For information about using the resulting date field:

- In arithmetic, see "Arithmetic with date fields" on page 237
- In conditional expressions, see "Comparison of date fields" on page 253

If the NODATEPROC compiler option is in effect, the DATEVAL function has no effect, and returns the value of *argument*-1 unchanged.

The function type depends on the type of *argument-1*:

Argument type	Function type
Alphanumeric	Alphanumeric
Integer	Integer

Format

```
►► FUNCTION DATEVAL ── ( ── argument-1 ── argument-2 ── ) ►◄
```

argument-1

Must be one of the following:

- A class alphanumeric item with the same number of characters as the date format specified by *argument-2*.
- An integer. This can be used to specify values outside the range specified by *argument-2*, including negative values.

The value of *argument-1* represents a date of the form specified by *argument-2*.

argument-2

Must be an alphanumeric literal specifying a date pattern, as defined in "DATE FORMAT clause" on page 166. The date pattern consists of YY or YYYY (representing a windowed year or expanded year, respectively), optionally preceded or followed by one or more Xs (representing other parts of a date, such as month and day), as shown below. Note that the values are case insensitive; the letters X and Y in *argument-2* can be any mix of uppercase and lowercase.

Date-pattern string	Specifies that *argument-1* contains
YY	A windowed (two-digit) year
YYYY	An expanded (four-digit) year
X	A single character; for example, a digit representing a semester or quarter (1–4)
XX	Two characters; for example, digits representing a month (01–12)
XXX	Three characters; for example, digits representing a day of the year (001–366)
XXXX	Four characters; for example, two digits representing a month (01–12) and two digits representing a day of the month (01–31)

© Copyright IBM Corp. 2021, 2025

Chapter 35. DAY-OF-INTEGER

The DAY-OF-INTEGER function converts a date in the Gregorian calendar from integer date form to Julian date form (YYYYDDD).

The function type is integer.

The function result is a seven-digit integer.

If the DATEPROC compiler option is in effect, the returned value is an expanded date field with implicit DATE FORMAT YYYYXXX.

Format

```
►► FUNCTION DAY-OF-INTEGER ── ( ── argument-1 ── ) ──►◄
```

argument-1

A positive integer that represents a number of days succeeding December 31, 1600, in the Gregorian calendar. The valid range is 1 to 3,067,671, which corresponds to dates ranging from January 1, 1601 thru December 31, 9999.

The returned value represents the Julian equivalent of the integer specified as *argument-1*. The returned value is an integer of the form YYYYDDD where YYYY represents a year in the Gregorian calendar and DDD represents the day of that year.

© Copyright IBM Corp. 2021, 2025

Chapter 36. DAY-TO-YYYYDDD

The DAY-TO-YYYYDDD function converts *argument-1* from a date with a two-digit year (YYnnn) to a date with a four-digit year (YYYYnnn). *argument-2*, when added to the year at the time of execution, defines the ending year of a 100-year interval, or sliding century window, into which the year of *argument-1* falls.

The function type is integer.

If the DATEPROC compiler option is in effect, the returned value is an expanded date field with implicit DATE FORMAT YYYYXXX.

Format

```
►► FUNCTION DAY-TO-YYYYDDD ── ( ── argument-1 ──┬──────────────┬── ) ──►◄
                                                └─ argument-2 ─┘
```

argument-1
Must be zero or a positive integer less than 99367.

The COBOL run time does not verify that the value is a valid date.

argument-2
Must be an integer. If *argument-2* is omitted, the function is evaluated assuming the value 50 was specified.

The sum of the year at the time of execution and the value of *argument-2* must be less than 10,000 and greater than 1,699.

Some examples of returned values from the DAY-TO-YYYYDDD function follow:

Current year	***argument-1* value**	***argument-2* value**	**Returned value**
2002	10004	-20	1910004
2002	10004	-120	1810004
2002	10004	20	2010004
2013	95005	-10	1995005

© Copyright IBM Corp. 2021, 2025

Chapter 37. DISPLAY-OF

The DISPLAY-OF function returns an alphanumeric character string consisting of the content of *argument-1* converted to a specific code page representation.

The type of the function is alphanumeric.

Format

```
►► FUNCTION DISPLAY-OF ── ( ── argument-1 ──┬──────────────┬── ) ──►◄
                                            └─ argument-2 ─┘
```

argument-1
Must be of class national (categories national, national-edited, and numeric-edited described with usage NATIONAL). *argument-1* identifies the source string for the conversion.

argument-2
Must be an integer or of class alphanumeric. *argument-2* identifies the output code page for the conversion.

If *argument-2* is of class alphanumeric, it must identify a primary or alias code-page name that is supported by ICU conversion libraries (see *International Components for Unicode: Converter Explorer*).

If *argument-2* is an integer, the integer must be a valid CCSID number.

If *argument-2* is omitted, the output code page is determined from the runtime locale.

The returned value is an alphanumeric character string consisting of the characters of *argument-1* converted to the output code page representation. When a source character cannot be converted to a character in the output code page, the source character is replaced with a substitution character. The following table shows substitution characters for some widely-used code pages:

Output code page	Substitution character
SBCS ASCII PC Windows SBCS	X'7F'
ISO SBCS	X'1A'
EBCDIC SBCS	X'3F'
ASCII DBCS	X'FCFC'
EBCDIC DBCS (except for Thai)	X'FEFE'
EBCDIC DBCS (Thai)	X'41B8'
PC DBCS (Japanese or Chinese)	X'FCFC'
PC DBCS (Korean)	X'BFFC'
EUC (Korean)	X'AFFE'
EUC (Japanese)	X'747E'
UTF-8	From SBCS: X'1A' From MBCS: X'EFBFBD'

© Copyright IBM Corp. 2021, 2025

Output code page	Substitution character
UTF-16	From SBCS: X'1A00' From MBCS: X'FDFF'

No exception condition is raised.

The length of the returned value depends on the content of *argument-1* and the characteristics of the output code page.

Usage notes

- Use of code page names provides consistency with other Linux software, but the source code is not portable to Enterprise COBOL for z/OS.
- The CCSID for UTF-8 is 1208.
- If the output code page includes DBCS characters, the returned value can be a mixed SBCS and DBCS string.
- The DISPLAY-OF function, with *argument-2* specified, can be used to generate character data represented in a code page that differs from the code page in effect for ASCII or EBCDIC data. Subsequent COBOL operations on that data can involve implicit conversions that assume the data is represented in the ASCII or EBCDIC code page in effect. See *Converting to or from national (Unicode) representation* in the *COBOL for Linux on x86 Programming Guide* for examples and programming techniques for processing data represented using more than one code page within a single program.

Exception: If the conversion fails, a severe runtime error occurs.

Chapter 38. EXTRACT-DATE-TIME

The EXTRACT-DATE-TIME function returns part of a date, time, or timestamp item.

The function type is integer or alphanumeric. If *argument-2* is a keyword (such as MONTHS or DAYS), or consists of only numeric specifiers, an integer is returned. Otherwise, an alphanumeric data item is returned.

The length of the result depends on the values extracted from the date-time item.

Format

```
►► FUNCTION EXTRACT-DATE-TIME ── ( ── argument-1 ── argument-2 ── ) ►◄
```

argument-1
Must be a date, time, or timestamp item.

argument-2
Specifies the values to be returned by the EXTRACT-DATE-TIME function.

Argument-2 is a keyword that represents a duration or a non-numeric literal that contains one or more separators and conversion specifications.

If the non-numeric literal contains only numeric conversion specifiers, the value returned by the EXTRACT-DATE-TIME function is an integer. A non-numeric literal containing separators or alphanumeric conversion specifiers results in an alphanumeric return value.

The valid durations and their equivalent conversion specifications are:

- YEARS ('@Y')
- MONTHS ('%m')
- DAYS ('%d')
- HOURS ('%H')
- MINUTES ('%M')
- SECONDS ('%S')
- MICROSECONDS ('@Sm')
- PICOSECONDS ('@Sp')

For a list of other valid conversion specifications, see Table 1 in the description of the FORMAT clause of the SPECIAL-NAMES paragraph.

The duration keyword or conversion specifier used in *argument-2* must be consistent with *argument-1*. For example, the duration keywords must obey the following rules:

1. YEARS, MONTHS, and DAYS can only be extracted from a date or timestamp item.
2. HOURS, MINUTES, SECONDS, and MICROSECONDS can only be extracted from a time or timestamp item.
3. If *argument-1* is a locale-based data item, and *argument-2* contains locale-based conversion specifiers (such as %p), the locale-based conversion specifier (%p, in this case) uses the locale of *argument-1*.

   If *argument-1* is *not* a locale-based data item, then the locale-based conversion specifier (%p, in this case) is treated as a non-locale-based conversion specifier and the % is replaced with an @ (%p, in this case, becomes @p and @p is the non-locale-based equivalent of %p).
4. PICOSECONDS can only be extracted from a timestamp item.

© Copyright IBM Corp. 2021, 2025

Examples

```
COMPUTE integer-1 = FUNCTION EXTRACT-DATE-TIME (date-3 MONTHS).
COMPUTE integer-1 = FUNCTION EXTRACT-DATE-TIME (date-3 '%m').
MOVE FUNCTION EXTRACT-DATE-TIME (date-2 '%m/%d') to alphanum-1.
```

Chapter 39. FACTORIAL

The FACTORIAL function returns an integer that is the factorial of the argument specified.

The function type is integer.

Format

```
►► FUNCTION FACTORIAL ── ( ── argument-1 ── ) ─►◄
```

argument-1

If the ARITH(COMPAT) compiler option is in effect, *argument-1* must be an integer greater than or equal to zero and less than or equal to 28. If the ARITH(EXTEND) or ARITH(FULL) compiler option is in effect, *argument-1* must be an integer greater than or equal to zero and less than or equal to 29.

If the value of *argument-1* is zero, the value 1 is returned; otherwise, the factorial of *argument-1* is returned.

© Copyright IBM Corp. 2021, 2025

Chapter 40. FIND-DURATION

The FIND-DURATION function returns an integer in the form of complete units of the specified duration. Any rounding is done downwards. The calculation of durations includes microseconds.

Use the FIND-DURATION function to calculate a duration between:

- Two dates
- A date and a timestamp
- Two times
- A time and a timestamp
- Two timestamps

The function type is integer.

The function result is a nine-digit integer. If the function result is larger than 9 digits (999,999,999), a machine check occurs.

Format

```
►►─ FUNCTION FIND-DURATION ──┬─( ─ argument-1 ─ argument-2 ─ argument-3 ─ )─┬─►◄
```

argument-1, argument-2
Must be a date, time, or timestamp item.

Argument-1 is subtracted from *argument-2*. The value returned is the number of complete units of *argument-3*. If *argument-1* is later than *argument-2*, the result is negative. If *argument-1* is earlier than *argument-2*, the result is positive.

argument-3
Is a keyword that represents a duration. The valid duration keywords are:

- YEARS
- MONTHS
- DAYS
- HOURS
- MINUTES
- SECONDS
- MICROSECONDS
- PICOSECONDS

In order to determine the valid duration keywords, the following rules apply:

1. If *argument-1* or *argument-2* is a date item, the duration specified must be consistent with a date.
2. If *argument-1* or *argument-2* is a time item, the duration specified must be consistent with a time.
3. If the returned value is not an integer, it is truncated. For example, the duration between March 17, 2020 and May 2, 2020 is 1.5 months. Because FIND-DURATION only returns an integer, the .5 is truncated, and the actual value returned is 1.
4. You can only request PICOSECONDS duration when *argument-1* and *argument-2* are timestamp items.

© Copyright IBM Corp. 2021, 2025

Examples

The following examples show how the FIND-DURATION intrinsic function can be used:

```
COMPUTE integer-1 = FUNCTION FIND-DURATION (date-3 date-4 MONTHS).
COMPUTE integer-1 = FUNCTION FIND-DURATION (timestamp-1 date-5 MONTHS).
```

Chapter 41. INTEGER

The INTEGER function returns the greatest integer value that is less than or equal to the argument specified.

The function type is integer.

Format

```
►► FUNCTION INTEGER ── ( ── argument-1 ── ) ►◄
```

argument-1
Must be class numeric.

The returned value is the greatest integer less than or equal to the value of *argument-1*. For example, FUNCTION INTEGER (2.5) returns a value of 2 and FUNCTION INTEGER (-2.5) returns a value of -3.

© Copyright IBM Corp. 2021, 2025

Chapter 42. INTEGER-OF-DATE

The INTEGER-OF-DATE function converts a date in the Gregorian calendar from standard date form (YYYYMMDD) to integer date form.

The function type is integer.

The function result is a seven-digit integer with a range from 1 to 3,067,671.

Format

```
►► FUNCTION INTEGER-OF-DATE ── ( ── argument-1 ── ) ►◄
```

argument-1

Must be an integer of the form YYYYMMDD, whose value is obtained from the calculation (YYYY * 10,000) + (MM * 100) + DD, where:

- YYYY represents the year in the Gregorian calendar. It must be an integer greater than 1600, but not greater than 9999.
- MM represents a month and must be a positive integer less than 13.
- DD represents a day and must be a positive integer less than 32, provided that it is valid for the specified month and year combination.

The returned value is an integer that is the number of days that the date represented by *argument-1* succeeds December 31, 1600 in the Gregorian calendar.

© Copyright IBM Corp. 2021, 2025

Chapter 43. INTEGER-OF-DAY

The INTEGER-OF-DAY function converts a date in the Gregorian calendar from Julian date form (YYYYDDD) to integer date form.

The function type is integer.

The function result is a seven-digit integer.

Format

```
►►─ FUNCTION INTEGER-OF-DAY ──┬─( ── argument-1 ── ) ─┬─►◄
                              └──────────────────────┘
```

argument-1

Must be an integer of the form YYYYDDD whose value is obtained from the calculation (YYYY * 1000) + DDD, where:

- YYYY represents the year in the Gregorian calendar. It must be an integer greater than 1600, but not greater than 9999.
- DDD represents the day of the year. It must be a positive integer less than 367, provided that it is valid for the year specified.

The returned value is an integer that is the number of days that the date represented by *argument-1* succeeds December 31, 1600 in the Gregorian calendar.

© Copyright IBM Corp. 2021, 2025

Chapter 44. INTEGER-PART

The INTEGER-PART function returns an integer that is the integer portion of the argument specified.

The function type is integer.

Format

```
►►─ FUNCTION INTEGER-PART ──┬─( ── argument-1 ── )─┬─►◄
```

argument-1
Must be class numeric.

If the value of *argument-1* is zero, the returned value is zero. If the value of *argument-1* is positive, the returned value is the greatest integer less than or equal to the value of *argument-1*. If the value of *argument-1* is negative, the returned value is the least integer greater than or equal to the value of *argument-1*.

© Copyright IBM Corp. 2021, 2025

Chapter 45. LENGTH

The LENGTH function returns an integer equal to the length of the argument in national character positions for arguments of usage NATIONAL and in alphanumeric character positions or bytes for all other arguments. An alphanumeric character position and a byte are equivalent.

The type of the function is integer.

Format

```
►► FUNCTION LENGTH ── ( ── argument-1 ── ) ►◄
```

argument-1
Can be:

- An alphanumeric literal or a national literal
- A data item of any class except DBCS
- A data item described with usage POINTER, PROCEDURE-POINTER, or FUNCTION-POINTER
- The ADDRESS OF special register
- The LENGTH OF special register
- The XML-NTEXT special register
- The XML-TEXT special register

The returned value is a 9-digit integer if the **ADDR(32)** compiler option is specified or an 18-digit integer if the **ADDR(64)** compiler option is specified. The value is determined as follows:

- If *argument-1* is an alphanumeric literal or an elementary data item of class alphabetic or alphanumeric, the value returned is equal to the number of alphanumeric character positions in the argument.

  If *argument-1* is a null-terminated alphanumeric literal, the returned value is equal to the number of alphanumeric character positions in the literal excluding the null character at the end of the literal.

  The length of an alphanumeric data item or literal containing a mix of single-byte and double-byte characters is counted as though each byte were a single-byte character.
- If *argument-1* is an alphanumeric group item, the value returned is equal to the length of *argument-1* in alphanumeric character positions regardless of the content of the group. If any data item subordinate to *argument-1* is described with the DEPENDING phrase of the OCCURS clause, the length of *argument-1* is determined using the contents of the data item specified in the DEPENDING phrase. This evaluation is accomplished according to the rules of the OCCURS clause for a sending data item. For more information, see the discussions of the "OCCURS clause" on page 177 and the "USAGE clause" on page 216.

  The returned value includes implicit FILLER positions, if any.
- If *argument-1* is a national literal or an elementary data item described with usage NATIONAL, the value returned is equal to the length of *argument-1* in national character positions.

  For example, if *argument-1* is defined as PIC 9(3) with usage NATIONAL, the returned value is 3, although the storage size of the argument is 6 bytes.
- If *argument-1* is a national group item, the value returned is equal to the length of *argument-1* in national character positions. If any data item subordinate to *argument-1* is described with the DEPENDING phrase of the OCCURS clause, the length of *argument-1* is determined using the contents of the data item specified in the DEPENDING phrase. This evaluation is accomplished according to the rules of the OCCURS clause for a sending data item. For more information, see the discussions of the "OCCURS clause" on page 177 and the "USAGE clause" on page 216.

  The returned value includes implicit FILLER positions, if any.

© Copyright IBM Corp. 2021, 2025

- Otherwise, the returned value is the number of bytes of storage occupied by *argument-1*.

Chapter 46. LOG

The LOG function returns a numeric value that approximates the logarithm to the base e (natural log) of the argument specified.

The function type is numeric.

Format

```
►► FUNCTION LOG ── ( ── argument-1 ── ) ►◄
```

argument-1
Must be class numeric. The value of *argument-1* must be greater than zero.

The returned value is the approximation of the logarithm to the base e of *argument-1*.

© Copyright IBM Corp. 2021, 2025

Chapter 47. LOG10

The LOG10 function returns a numeric value that approximates the logarithm to the base 10 of the argument specified.

The function type is numeric.

Format

```
►►─ FUNCTION LOG10 ──┬─( ── argument-1 ── )─┬─►◄
```

argument-1
Must be class numeric. The value of *argument-1* must be greater than zero.

The returned value is the approximation of the logarithm to the base 10 of *argument-1*.

© Copyright IBM Corp. 2021, 2025

Chapter 48. LOWER-CASE

The LOWER-CASE function returns a character string that contains the characters in the argument with each uppercase letter replaced by the corresponding lowercase letter.

The function type depends on the type of the argument, as follows:

Argument type	Function type
Alphabetic	Alphanumeric
Alphanumeric	Alphanumeric
National	National

Format

```
►► FUNCTION LOWER-CASE ── ( ── argument-1 ── ) ►◄
```

argument-1
Must be class alphabetic, alphanumeric, or national and must be at least one character position in length.

The same character string as *argument-1* is returned, except that each uppercase letter is replaced by the corresponding lowercase letter.

The conversion of characters from uppercase to lowercase is based on the specification of character attributes in the applicable runtime locale.

For some locales, the conversion of characters from uppercase to lowercase can result in a character string with a different length than the length of *argument-1*. This can occur for all possible argument types. For alphabetic and alphanumeric arguments that consist solely of uppercase Latin letters A through Z, lowercase Latin letters a through z, and digits 0 through 9, the length of the returned character string is the same as the length of *argument-1*.

© Copyright IBM Corp. 2021, 2025

Chapter 49. MAX

The MAX function returns the content of the argument that contains the maximum value.

The function type depends on the argument type, as follows:

Argument type	Function type
Alphabetic	Alphanumeric
Alphanumeric	Alphanumeric
National	National
All arguments integer (includes integer arguments of usage NATIONAL)	Integer
Numeric (some arguments can be integer) (includes numeric arguments of usage NATIONAL)	Numeric

Format

```
►► FUNCTION MAX ── ( ┌──argument-1──┐ ) ►◄
                     ◄──────────────
```

argument-1
Must be class alphabetic, alphanumeric, national, or numeric.

All arguments must be of the same class, except that a combination of alphabetic and alphanumeric arguments is allowed.

The returned value is the content of *argument-1* having the greatest value. The comparisons used to determine the greatest value are made according to the rules for simple conditions. For more information, see "Conditional expressions" on page 240.

If more than one *argument-1* has the same greatest value, the leftmost *argument-1* having that value is returned.

If the type of the function is alphanumeric or national, the size of the returned value is the size of the selected *argument-1*.

© Copyright IBM Corp. 2021, 2025

Chapter 50. MEAN

The MEAN function returns a numeric value that approximates the arithmetic average of its arguments.

The function type is numeric.

Format

```
►► FUNCTION MEAN ── ( ┌──────────────┐ ─┬─ argument-1 ─┬─ ) ►◄
                      ◄──────────────┘  └──────────────┘
```

argument-1
Must be class numeric.

The returned value is the arithmetic mean of the *argument-1* series. The returned value is defined as the sum of the *argument-1* series divided by the number of occurrences referenced by *argument-1*.

© Copyright IBM Corp. 2021, 2025

Chapter 51. MEDIAN

The MEDIAN function returns the content of the argument whose value is the middle value in the list formed by arranging the arguments in sorted order.

The function type is numeric.

Format

```
►► FUNCTION MEDIAN ── ( ┌──────────────┐ ──┬──────────────┬── ) ►◄
                        ◄ argument-1 ◄──┘  └──────────────►
```

argument-1
Must be class numeric.

The returned value is the content of *argument-1* having the middle value in the list formed by arranging all *argument-1* values in sorted order.

If the number of occurrences referenced by *argument-1* is odd, the returned value is such that at least half of the occurrences referenced by *argument-1* are greater than or equal to the returned value and at least half are less than or equal. If the number of occurrences referenced by *argument-1* is even, the returned value is the arithmetic mean of the values referenced by the two middle occurrences.

The comparisons used to arrange the argument values in sorted order are made according to the rules for simple conditions. For more information, see “Conditional expressions” on page 240.

© Copyright IBM Corp. 2021, 2025

Chapter 52. MIDRANGE

The MIDRANGE function returns a numeric value that approximates the arithmetic average of the values of the minimum argument and the maximum argument.

The function type is numeric.

Format

```
►► FUNCTION MIDRANGE ── ( ┌──argument-1──┐ ) ►◄
                          ◄──────────────┘
```

argument-1
Must be class numeric.

The returned value is the arithmetic mean of the value of the greatest *argument-1* and the value of the least *argument-1*. The comparisons used to determine the greatest and least values are made according to the rules for simple conditions. For more information, see “Conditional expressions” on page 240.

© Copyright IBM Corp. 2021, 2025

Chapter 53. MIN

The MIN function returns the content of the argument that contains the minimum value.

The function type depends on the argument type, as follows:

Argument type	Function type
Alphabetic	Alphanumeric
Alphanumeric	Alphanumeric
National	National
All arguments integer (includes integer arguments of usage NATIONAL)	Integer
Numeric (some arguments can be integer) (includes numeric arguments of usage NATIONAL)	Numeric

Format

```
>>─ FUNCTION MIN ─ ( ┌──argument-1──┐ ) ─><
                     └──────────────┘
```

argument-1
Must be class alphabetic, alphanumeric, national, or numeric.

All arguments must be of the same class, except that a combination of alphabetic and alphanumeric arguments is allowed.

The returned value is the content of *argument-1* having the least value. The comparisons used to determine the least value are made according to the rules for simple conditions. For more information, see "Conditional expressions" on page 240.

If more than one *argument-1* has the same least value, the leftmost *argument-1* having that value is returned.

If the type of the function is alphanumeric or national, the size of the returned value is the size of the selected *argument-1*.

© Copyright IBM Corp. 2021, 2025

Chapter 54. MOD

The MOD function returns an integer value that is *argument-1* modulo *argument-2*.

The function type is integer.

The function result is an integer with as many digits as the shorter of *argument-1* and *argument-2*.

Format

```
►► FUNCTION MOD ── ( ── argument-1 ── argument-2 ── ) ►◄
```

argument-1
Must be an integer.

argument-2
Must be an integer. Must not be zero.

The returned value is *argument-1* modulo *argument-2*. The returned value is defined as:

argument-1 - (*argument-2* * FUNCTION INTEGER (*argument-1* / *argument-2*))

The following table lists expected results for some values of *argument-1* and *argument-2*.

argument-1	***argument-2***	**Returned value**
11	5	1
-11	5	4
11	-5	-4
-11	-5	-1

© Copyright IBM Corp. 2021, 2025

Chapter 55. NATIONAL-OF

The NATIONAL-OF function returns a national character string consisting of the national character representation of the characters in *argument-1*.

The type of the function is national.

Format

```
►► FUNCTION NATIONAL-OF ── ( ── argument-1 ──┬──────────────┬── ) ──►◄
                                             └─ argument-2 ─┘
```

argument-1
Must be of class alphabetic, alphanumeric, or DBCS. *argument-1* specifies the source string for the conversion.

argument-2
Must be an integer or of class alphanumeric. *argument-2* identifies the source code page for the conversion.

If *argument-2* is of class alphanumeric, it must identify a primary or alias code-page name that is supported by ICU conversion libraries (see *International Components for Unicode: Converter Explorer*).

If *argument-2* is an integer, the integer must be a valid CCSID number.

If *argument-2* is omitted, the source code page is determined as follows:

- If *argument-1* is a native item (USAGE DISPLAY or USAGE DISPLAY-1 containing ASCII or ASCII DBCS, EUC, or UTF-8 data), the source code page is determined from the runtime locale.
- If *argument-1* is a USAGE DISPLAY or USAGE DISPLAY-1 item containing EBCDIC or EBCDIC DBCS data, the source code page is determined from the EBCDIC_CODEPAGE environment variable, if it is set. If the EBCDIC_CODEPAGE environment variable is not set, the source code page is the default code page specified in the *Locales and code pages that are supported* in the *COBOL for Linux on x86 Programming Guide*.

The returned value is a national character string consisting of the characters of *argument-1* converted to national character representation. When a source character cannot be converted to a national character, the source character is converted to a substitution character. The substitution character is:

- X'1A00' if converting a single-byte character
- X'FDFF' if converting a multi-byte character

No exception condition is raised.

The length of the returned value depends on the content of *argument-1* and the characteristics of the source code page.

Usage notes:

- Use of code page names provides consistency with other Linux software, but the source code is not portable to Enterprise COBOL for z/OS.
- The CCSID for UTF-8 is 1208.
- The CCSID for UTF-16LE is 1200.

Exception: If the conversion fails, a severe runtime error occurs.

© Copyright IBM Corp. 2021, 2025

Chapter 56. NUMVAL

The NUMVAL function returns the numeric value represented by the alphanumeric character string or national character string specified as the argument. The function removes any leading or trailing spaces in the string to produce a numeric value.

The function type is numeric.

Format

```
FUNCTION NUMVAL ── ( ── argument-1 ── ) ──
```

argument-1

Must be an alphanumeric literal, a national literal, or a data item of class national or class alphanumeric that contains a character string in either of the following formats:

Format 1: argument-1

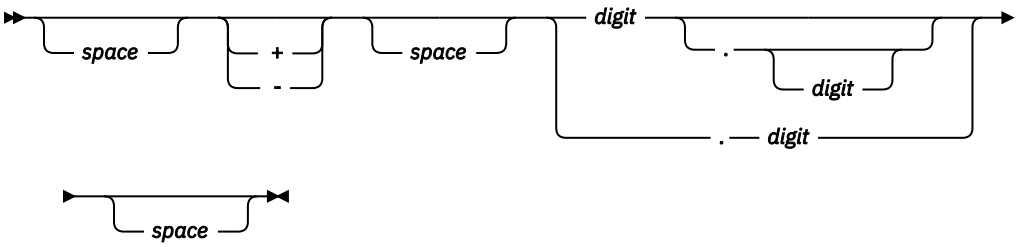

Format 2: argument-1, monetary format

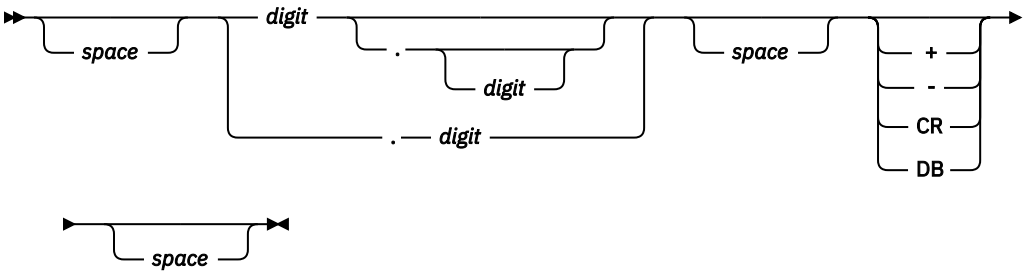

space

A string of one or more spaces.

digit

A string of one or more digits. If the ARITH(COMPAT) compiler option is in effect, the total number of digits must not exceed 18. If the ARITH(EXTEND) or ARITH(FULL) compiler option is in effect, the total number of digits must not exceed 31.

If the DECIMAL-POINT IS COMMA clause is specified in the SPECIAL-NAMES paragraph, a comma must be used in *argument-1* rather than a decimal point.

The returned value is a floating-point approximation of the numeric value represented by *argument-1*. The precision of the returned value depends on the setting of the ARITH compiler option. For details, see *Converting to numbers (NUMVAL, NUMVAL-C, NUMVAL-F)* in the *COBOL for Linux on x86 Programming Guide*.

© Copyright IBM Corp. 2021, 2025

Chapter 57. NUMVAL-C

The NUMVAL-C function returns the numeric value represented by the alphanumeric character string or national character string specified as *argument-1*. The function removes the currency string, if any, and any grouping separators (commas or periods) to produce a numeric value.

The function type is numeric.

Format

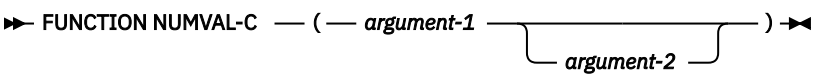

argument-1

Must be an alphanumeric literal, a national literal, or a data item of class alphanumeric or class national that contains a character string in either of the following formats:

Format 1: argument-1

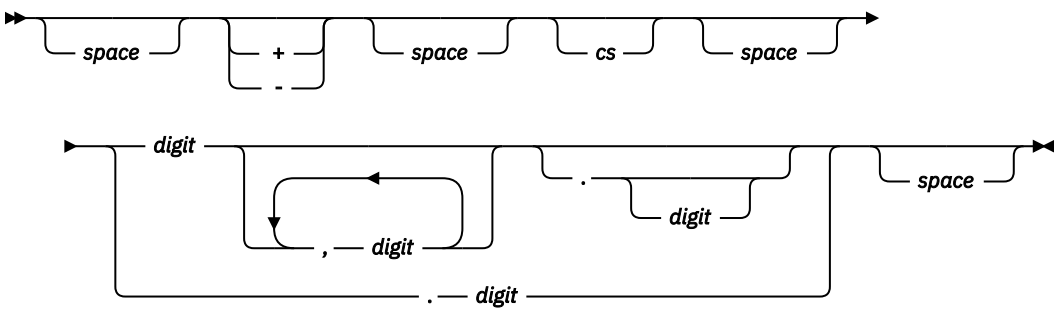

Format 2: argument-1, monetary format

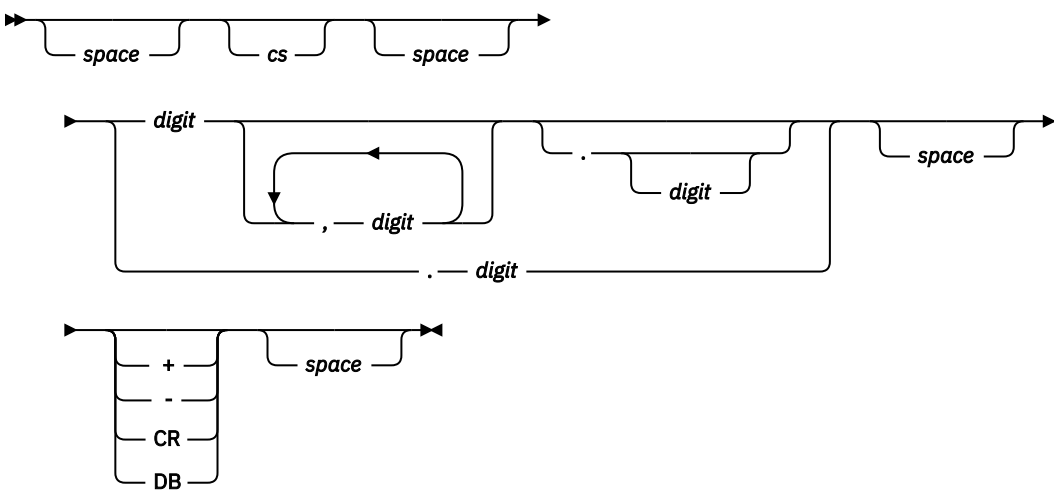

space

A string of one or more spaces.

© Copyright IBM Corp. 2021, 2025

cs
The string of one or more characters that form the currency sign. At most one copy of the characters specified by *cs* can occur in *argument-1*.

digit
A string of one or more digits. If the ARITH(COMPAT) compiler option is in effect, the total number of digits must not exceed 18. If the ARITH(EXTEND) or ARITH(FULL) compiler option is in effect, the total number of digits must not exceed 31.

If the DECIMAL-POINT IS COMMA clause is specified in the SPECIAL-NAMES paragraph, the functions of the comma and decimal point in *argument-1* are reversed.

argument-2
Specifies the currency string value.

The following rules apply:

- *argument-2* must be specified if the program contains more than one CURRENCY SIGN clause.
- *argument-2*, if specified, must be of the same class as *argument-1*.
- *argument-2* must not contain any of the digits 0 through 9, any leading or trailing spaces, or any of the special characters '+', '-', '.', or ',.
- *argument-2* can be of any length valid for an elementary or group data item of the class of *argument-2*, including zero.
- Matching of *argument-2* is case sensitive. For example, if you specify *argument-2* as 'CHF', it will not match 'ChF', 'chf' or 'chF'.

If *argument-2* is not specified, the character used for *cs* is the currency symbol specified for the program.

The returned value is a floating-point approximation of the numeric value represented by *argument-1*. The precision of the returned value depends on the setting of the ARITH compiler option. For details, see *Converting to numbers (NUMVAL, NUMVAL-C, NUMVAL-F)* in the *COBOL for Linux on x86 Programming Guide*.

Chapter 58. ORD

The ORD function returns an integer value that is the ordinal position of its argument in the collating sequence for the program. The lowest ordinal position is 1.

The function type is integer.

The function result is a three-digit integer.

Format

```
►► FUNCTION ORD ── ( ── argument-1 ── ) ►◄
```

argument-1
Must be one character in length and must be class alphabetic or alphanumeric.

The returned value is the ordinal position of *argument-1* in the collating sequence for the program; it ranges from 1 to 256 depending on the collating sequence.

© Copyright IBM Corp. 2021, 2025

Chapter 59. ORD-MAX

The ORD-MAX function returns a value that is the ordinal position in the argument list of the argument that contains the maximum value.

The function type is integer.

Format

```
►► FUNCTION ORD-MAX ── ( ┌──argument-1──┐ ) ►◄
                         ◄──────────────┘
```

argument-1
Must be class alphabetic, alphanumeric, national, or numeric.

All arguments must be of the same class, except that a combination of alphabetic and alphanumeric arguments is allowed.

The returned value is the ordinal number that corresponds to the position of the *argument-1* having the greatest value in the *argument-1* series.

The comparisons used to determine the greatest-valued *argument-1* are made according to the rules for simple conditions. For more information, see "Conditional expressions" on page 240.

If more than one *argument-1* has the same greatest value, the number returned corresponds to the position of the leftmost *argument-1* having that value.

© Copyright IBM Corp. 2021, 2025

Chapter 60. ORD-MIN

The ORD-MIN function returns a value that is the ordinal position in the argument list of the argument that contains the minimum value.

The function type is integer.

Format

```
►► FUNCTION ORD-MIN ── ( ┌──argument-1──┐ ) ►◄
                         ◄──────────────┘
```

argument-1
Must be class alphabetic, alphanumeric, national, or numeric.

All arguments must be of the same class, except that a combination of alphabetic and alphanumeric arguments is allowed.

The returned value is the ordinal number that corresponds to the position of the *argument-1* having the least value in the *argument-1* series.

The comparisons used to determine the least-valued *argument-1* are made according to the rules for simple conditions. For more information, see "Conditional expressions" on page 240.

If more than one *argument-1* has the same least value, the number returned corresponds to the position of the leftmost *argument-1* having that value.

© Copyright IBM Corp. 2021, 2025

Chapter 61. PRESENT-VALUE

The PRESENT-VALUE function returns a value that approximates the present value of a series of future period-end amounts specified by *argument-2* at a discount rate specified by *argument-1*.

The function type is numeric.

Format

```
►► FUNCTION PRESENT-VALUE ── ( ── argument-1 ──┬──┬── argument-2 ──┬── ) ──►◄
                                               ◄──┘                ◄──┘
```

argument-1
Must be class numeric. Must be greater than -1.

argument-2
Must be class numeric.

The returned value is an approximation of the summation of a series of calculations with each term in the following form:

argument-2 / (1 + *argument-1*) ** *n*

There is one term for each occurrence of *argument-2*. The exponent *n* is incremented from 1 by 1 for each term in the series.

© Copyright IBM Corp. 2021, 2025

Chapter 62. RANDOM

The RANDOM function returns a numeric value that is a pseudorandom number from a rectangular distribution.

The function type is numeric.

Format

```
►► FUNCTION RANDOM ──┬──────────────────────┬──►◄
                     └─ ( ── argument-1 ── ) ─┘
```

argument-1

If *argument-1* is specified, it must be zero or a positive integer. However, only values in the range from zero up to and including 2,147,483,645 yield a distinct sequence of pseudorandom numbers.

If a subsequent reference specifies *argument-1*, a new sequence of pseudorandom numbers is started.

If the first reference to this function in the run unit does not specify *argument-1*, the seed value used will be zero.

In each case, subsequent references without specifying *argument-1* return the next number in the current sequence.

The returned value is exclusively between zero and one.

For a given seed value, the sequence of pseudorandom numbers is always the same.

The RANDOM function can be used in threaded programs. For an initial seed, a single sequence of pseudorandom numbers is returned, regardless of the thread that is running when RANDOM is invoked.

© Copyright IBM Corp. 2021, 2025

Chapter 63. RANGE

The RANGE function returns a value that is equal to the value of the maximum argument minus the value of the minimum argument.

The function type depends on the argument types, as follows:

Argument type	Function type
All arguments integer	Integer
Numeric (some arguments can be integer)	Numeric

Format

```
>>- FUNCTION RANGE --- ( ---+---argument-1---+--- ) -><
                           |                |
                           <----------------<
```

argument-1
Must be class numeric.

The returned value is equal to *argument-1* with the greatest value minus the *argument-1* with the least value. The comparisons used to determine the greatest and least values are made according to the rules for simple conditions. For more information, see “Conditional expressions” on page 240.

© Copyright IBM Corp. 2021, 2025

Chapter 64. REM

The REM function returns a numeric value that is the remainder of *argument-1* divided by *argument-2*.

The function type is numeric.

Format

```
►► FUNCTION REM ── ( ── argument-1 ── argument-2 ── ) ►◄
```

argument-1
Must be class numeric.

argument-2
Must be class numeric. Must not be zero.

The returned value is the remainder of *argument-1* divided by *argument-2*. It is defined as the expression:

argument-1 - (*argument-2* * FUNCTION INTEGER-PART (*argument-1* / *argument-2*))

© Copyright IBM Corp. 2021, 2025

Chapter 65. REVERSE

The REVERSE function returns a character string of exactly the same length as the argument, whose characters are exactly the same as those specified in the argument except that they are in reverse order. For arguments of type national, character positions are reversed.

The function type depends on the type of the argument, as follows:

Argument type	Function type
Alphabetic	Alphanumeric
Alphanumeric	Alphanumeric
National	National

Format

```
►►─ FUNCTION REVERSE ──┬─( ── argument-1 ── )─┬─►◄
```

argument-1
Must be class alphabetic, alphanumeric, or national and must be at least one character in length.

The returned value is a character string of the same length as *argument-1*, with the characters of *argument-1* in reversed order. For example, if *argument-1* contains ABC, the returned value is CBA.

© Copyright IBM Corp. 2021, 2025

Chapter 66. SIN

The SIN function returns a numeric value that approximates the sine of the angle or arc specified by the argument in radians.

The function type is numeric.

Format

```
►►─ FUNCTION SIN ──┬─( ── argument-1 ── )─┬─►◄
```

argument-1
Must be class numeric.

The returned value is the approximation of the sine of *argument-1* and is greater than or equal to -1 and less than or equal to +1.

© Copyright IBM Corp. 2021, 2025

Chapter 67. SQRT

The SQRT function returns a numeric value that approximates the square root of the argument specified.

The function type is numeric.

Format

```
►► FUNCTION SQRT ── ( ── argument-1 ── ) ►◄
```

argument-1

Must be class numeric. The value of *argument-1* must be zero or positive.

The returned value is the absolute value of the approximation of the square root of *argument-1*.

© Copyright IBM Corp. 2021, 2025

Chapter 68. STANDARD-DEVIATION

The STANDARD-DEVIATION function returns a numeric value that approximates the standard deviation of its arguments.

The function type is numeric.

Format

```
►► FUNCTION STANDARD-DEVIATION ── ( ┌──argument-1──┐ ) ►◄
                                   ◄──────────────┘
```

argument-1
Must be class numeric.

The returned value is the approximation of the standard deviation of the *argument-1* series. The returned value is calculated as follows:

1. The difference between each *argument-1* and the arithmetic mean of the *argument-1* series is calculated and squared.
2. The values obtained are then added together. This quantity is divided by the number of values in the *argument-1* series.
3. The square root of the quotient obtained is then calculated. The returned value is the absolute value of this square root.

If the *argument-1* series consists of only one value, or if the *argument-1* series consists of all variable-occurrence data items and the total number of occurrences for all of them is one, the returned value is zero.

© Copyright IBM Corp. 2021, 2025

Chapter 69. SUBTRACT-DURATION

The SUBTRACT-DURATION function subtracts a duration from a date, time, or timestamp item, and returns the modified item.

The function type is date-time.

The length of the return value depends on the length of the date, time, or timestamp item specified in *argument-1*. The returned value will be truncated to the length of *argument-1*.

If a duration is subtracted from a date item, the date returned must fall within a certain range:

- For 4-digit dates, the range must be 0001/01/01 through 9999/12/31.
- For 2-digit dates, the range must be 0001/01/01 through 9999/12/31, but the year is truncated to 2 digits.
- For a 3-digit year (a 1-digit century and a 2-digit year), the range must be 1900/01/01 through 2899/12/31 (the default). This range can be changed by specifying the DATETIME compiler option.

If a duration is subtracted from a 2-digit date item, the range is the same as for a 4-digit year, but the year in the value returned is truncated to 2 digits.

Format

```
►► FUNCTION SUBTRACT-DURATION ── ( ── argument-1 ──┬──┬── argument-2 ── argument-3 ──┬── ) ──►◄
                                                   ◄──┘                              ◄──┘
```

argument-1

Must be a date, time, or timestamp item.

argument-1 is the value from which a duration is subtracted. The duration is specified in *argument-2* and *argument-3*.

argument-2

argument-2 is a keyword that represents a duration. The valid durations are:

- YEARS
- MONTHS
- DAYS
- HOURS
- MINUTES
- SECONDS
- MICROSECONDS
- PICOSECONDS

The duration keyword or conversion specifier used must be consistent with *argument-1*. For example, the duration keywords must obey the following rules:

1. YEARS, MONTHS, and DAYS can only be subtracted from a date or timestamp item.
2. HOURS, MINUTES, SECONDS, and MICROSECONDS can only be subtracted from a time or timestamp item.
3. PICOSECONDS can only be subtracted from a timestamp item.

argument-3

Must be an integer arithmetic expression. *argument-3* is the number of units of the duration, as specified in *argument-2*, that are to be subtracted from *argument-1*.

© Copyright IBM Corp. 2021, 2025

argument-2 and *argument-3* can be repeated. There should be no duplicate *argument-2* in one intrinsic function.

argument-3 can be a negative integer, but the function only takes its absolute value. If *argument-3* is longer than 9 digits, it is truncated.

If a duration is subtracted from a date, and the result is invalid, the date is adjusted. For example, if a duration of 1 month is subtracted from the date `May 31, 2020`, the result would be the invalid date `April 31, 2020`. This date would be adjusted to the valid date `April 30, 2020`.

Examples

The following examples show how the SUBTRACT-DURATION intrinsic function can be used:

```
MOVE FUNCTION SUBTRACT-DURATION (date-1 MONTHS 1)
     TO date-2.
MOVE FUNCTION SUBTRACT-DURATION (date-2 MONTHS 1 + 2 * 3)
     TO date-1.
MOVE FUNCTION SUBTRACT-DURATION (date-3 MONTHS 5 DAYS 1000)
     TO date-1.
```

Related references

Chapter 24, “ADD-DURATION,” on page 441

Chapter 70. SUM

The SUM function returns a value that is the sum of the arguments.

The function type depends on the argument types, as follows:

Argument type	Function type
All arguments integer	Integer
Numeric (some arguments can be integer)	Numeric

Format

```
>>- FUNCTION SUM --- ( ---+-------------+--- ) -><
                          |  argument-1 |
                          <-------------<
```

argument-1
Must be class numeric.

The returned value is the sum of the arguments. If the *argument-1* series are all integers, the value returned is an integer. If the *argument-1* series are not all integers, a numeric value is returned.

© Copyright IBM Corp. 2021, 2025

Chapter 71. TAN

The TAN function returns a numeric value that approximates the tangent of the angle or arc that is specified by the argument in radians.

The function type is numeric.

Format

```
►►─ FUNCTION TAN ──┬─( ── argument-1 ── )─┬─►◄
```

argument-1
Must be class numeric.

The returned value is the approximation of the tangent of *argument-1*.

© Copyright IBM Corp. 2021, 2025

Chapter 72. TEST-DATE-TIME

The TEST-DATE-TIME function takes a date, time, timestamp, alphanumeric, numeric packed, or zoned item. The function determines if it is a valid date, time, or timestamp. It returns true (B'1') if it is a valid item or false (B'0') if it is not a valid item.

The function type is boolean.

The length of the returned value is 1 byte.

Format

```
►► FUNCTION TEST-DATE-TIME ── ( ── argument-1 ──►
   ►──┬──────────────────────────────────────────────┬──) ──►◄
      └─ argument-2 ──┬──────────────────────────────┬─┘
                      └─ argument-3 ──┬──────────────┬─┘
                                      └─ argument-4 ─┘
```

argument-1

A valid *argument-1* can be:

- A date, time, or timestamp item
- An item of class alphanumeric
- A non-numeric literal
- An item of class numeric integer

If *argument-1* is a date, time, or timestamp item, *argument-2* through *argument-4* are optional. If *argument-1* is not a date, time, or timestamp item, *argument-2* must be specified (*argument-3* and *argument-4* are optional).

Argument-1 is tested to see if it is a valid item, based on its type or on the type of *argument-2* through *argument-4*.

argument-2

A valid *argument-2* can be:

- DATE
- TIME
- TIMESTAMP

If *argument-2* is TIMESTAMP, *argument-3* can only be specified with FORMAT OF special register, and *argument-4* cannot be specified.

argument-3

Specifies the format of a date or time item. It must be:

- A nonnumeric literal at least 2 characters long
- The keyword LOCALE
- The FORMAT OF special register

If *argument-3* is the keyword LOCALE, then the format of the date or time is based on a LOCALE. If *argument-4* is not specified, the current locale is used; otherwise the locale associated with the mnemonic-name or the LOCALE OF special register is used.

If *argument-3* is not specified, the format used for the test is the one defined in the SPECIAL-NAMES FORMAT clause. For TIMESTAMP, if *argument-3* is not specified, the default format of @Y-%m-%d-%H.%M.%S.@Sm is used.

© Copyright IBM Corp. 2021, 2025

argument-4

Must be a mnemonic-name associated with a LOCALE, or the LOCALE OF special register.

Argument-4 must follow these rules:

- If *argument-4* is specified and *argument-3* is a locale-based format literal, for example contains %p, then the locale-based format literal would use the locale specified in *argument-4* to determine the actual value of the conversion specifiers.
- If *argument-3* is a locale-based format literal, for example, contains %p and *argument-4 is* not specified, the locale-based format literal would use the current locale to determine the actual value of the conversion specifiers.
- If *argument-3* is a locale-based format literal, for example, contains %p, and the LOCALE OF special register is used to refer to a non-locale item, the locale-based format literal uses the default locale to determine the actual value of the conversion specifiers.

Examples:

The following examples show how the TEST-DATE-TIME intrinsic function can be used:

```
WORKING-STORAGE SECTION.
01 mydate1 PIC X(8) VALUE '07312013'.

PROCEDURE DIVISION.

IF FUNCTION TEST-DATE-TIME (mydate1 DATE '%d%m%Y') = B'1'
   DISPLAY 'Valid Date'
END-IF.
```

Chapter 73. TRIM

The TRIM function returns the given string with any leading and trailing blacks that are removed, or the given string with any leading and trailing specified characters removed.

The type of the function is alphanumeric, DBCS, or national depending on the class of its argument.

Format

```
►► FUNCTION TRIM ── ( ── argument-1 ──┬──────────────┬── ) ──►◄
                                      └── argument-2 ─┘
```

argument-1
Must be a nonnumeric literal or data item of class alphabetic, alphanumeric, DBCS, or national. *Argument-1* identifies the source string for the trim.

argument-2
If specified, it must be a nonnumeric literal or data item of the same class as *argument-1*. It specifies the characters to trim off. If not specified, the trim character defaults to blank.

If *argument-2* is not specified, the returned value is an alphanumeric, DBCS, or national character string that consists of the characters of *argument-1* with any leading and trailing blanks removed. The blank character is a 1-byte space character (' ' or X'20') when *argument-1* is of class alphanumeric, or one double-byte space (X'2020') when *argument-1* is of class DBCS, or one national space (X'2000' or X'0030') when *argument-1* is of class national.

If *argument-2* is specified, all characters in *argument-2* are trimmed off from both ends of the string. The returned value is an alphanumeric, DBCS, or national character string that consists of the characters of *argument-1* with any leading and trailing characters specified in *argument-2* removed.

The length of the returned string depends on the content and the class of *argument-1*. It is the length of the returned string in number of character positions. If *argument-1* is a DBCS or national data item, the length is in DBCS or national character positions.

Returned values

The order of the characters in the *argument-2* parameter does not affect the outcome of the operation. The characters are a list of single characters. For example, `FUNCTION TRIML(fld, "abc")` returns the substring of fld that begins with any character that is not 'a', 'b', or 'c'. If fld contains "caxyz", `FUNCTION TRIM(fld, "abc")` returns "xyz". Characters can appear twice in the second parameter with no error. For example, `FUNCTION TRIM(fld, "aba")` is valid. This means the same as `FUNCTION TRIM(fld, "ab")`.

If the second parameter of FUNCTION TRIM, TRIML, or TRIMR is specified, blanks are not trimmed unless a blank appears as part of *argument-2*. TRIM, TRIML, and TRIMR functions are not sensitive to mixed SBCS/DBCS strings. Both *argument-1* and *argument-2* are treated as SBCS if their class is alphanumeric.

Examples:

```
FUNCTION TRIM("xxxABxCxxx", "x")             // returns 'ABxC'
FUNCTION TRIMR(">>>>ABC<<<<<", "<>")         // returns '>>>>ABC'
MOVE "xyz" TO tc.
FUNCTION TRIML("xxyyzzyyzzABCxyzyxzxy", tc)  // returns 'ABCxyzyxzxy'
```

© Copyright IBM Corp. 2021, 2025

Chapter 74. TRIML

The TRIML function returns the given string with any leading blacks removed, or the given string with any leading specified characters removed.

The type of the function is alphanumeric, DBCS, or national depending on the class of its argument.

Format

```
►► FUNCTION TRIML ── ( ── argument-1 ──┬──────────────┬── ) ──►◄
                                       └── argument-2 ─┘
```

argument-1
Must be a nonnumeric literal or data item of class alphabetic, alphanumeric, DBCS, or national. *Argument-1* identifies the source string for the trim.

argument-2
If specified, it must be a nonnumeric literal or data item of the same class as *argument-1*. It specifies the characters to trim off. If not specified, the trim character defaults to blank.

If *argument-2* is not specified, the returned value is an alphanumeric, DBCS, or national character string that consists of the characters of *argument-1* with any leading blanks removed. The blank character is a 1-byte space character (' ' or X'40') when *argument-1* is of class alphanumeric, or one double-byte space (X'4040') when *argument-1* is of class DBCS, or one national space (X'0020' or X'3000') when *argument-1* is of class national.

If *argument-2* is not specified, the returned value is an alphanumeric, DBCS, or national character string that consists of the characters of *argument-1* with any leading blanks removed. The blank character is a 1-byte space character (' ' or X'40') when *argument-1* is of class alphanumeric, or one double-byte space (X'4040') when *argument-1* is of class DBCS, or one national space (X'0020' or X'3000') when *argument-1* is of class national.

If *argument-2* is specified, the returned value is an alphanumeric, DBCS, or national character string that consists of the characters of *argument-1* with any leading characters specified in *argument-2* removed.

The length of the returned string depends on the content and the class of *argument-1*. It is the length of the returned string in number of character positions. If *argument-1* is a DBCS or national data item, the length is in DBCS or national character positions.

For more information about returned values and examples, see Chapter 73, “TRIM,” on page 539.

Related references
Chapter 73, “TRIM,” on page 539

© Copyright IBM Corp. 2021, 2025

Chapter 75. TRIMR

The TRIMR function returns the given string with any trailing blacks removed, or the given string with any trailing specified characters removed.

The type of the function is alphanumeric, DBCS, or national depending on the class of its argument.

Format

```
►► FUNCTION TRIML ── ( ── argument-1 ──┬──────────────┬── ) ──►◄
                                       └── argument-2 ─┘
```

argument-1
Must be a nonnumeric literal or data item of class alphabetic, alphanumeric, DBCS, or national. *Argument-1* identifies the source string for the trim.

argument-2
If specified, it must be a nonnumeric literal or data item of the same class as *argument-1*. It specifies the characters to trim off. If not specified, the trim character defaults to blank.

If *argument-2* is not specified, the returned value is an alphanumeric, DBCS, or national character string that consists of the characters of *argument-1* with any leading blanks removed. The blank character is a 1-byte space character (' ' or X'40') when *argument-1* is of class alphanumeric, or one double-byte space (X'4040') when *argument-1* is of class DBCS, or one national space (X'0020' or X'3000') when *argument-1* is of class national.

If *argument-2* is specified, the returned value is an alphanumeric, DBCS, or national character string that consists of the characters of *argument-1* with any trailing characters specified in *argument-2* removed.

The length of the returned string depends on the content and the class of *argument-1*. It is the length of the returned string in number of character positions. If *argument-1* is a DBCS or national data item, the length is in DBCS or national character positions.

For more information on returned values and examples, see Chapter 73, “TRIM,” on page 539.

Related references
Chapter 73, “TRIM,” on page 539

© Copyright IBM Corp. 2021, 2025

Chapter 76. UNDATE

The UNDATE function converts a date field to a nondate for unambiguous use with nondates.

If the NODATEPROC compiler option is in effect, the UNDATE function has no effect.

The function type depends on the type of *argument-1*:

Argument type	Function type
Alphanumeric	Alphanumeric
Integer	Integer

Format

```
►►─ FUNCTION UNDATE ──┬─( ── argument-1 ── )─┬─►◄
```

argument-1
A date field.

The returned value is a nondate that contains the value of *argument-1* unchanged.

© Copyright IBM Corp. 2021, 2025

Chapter 77. UPPER-CASE

The UPPER-CASE function returns a character string that contains the characters in the argument with each lowercase letter replaced by the corresponding uppercase letter.

The function type depends on the type of the argument, as follows:

Argument type	Function type
Alphabetic	Alphanumeric
Alphanumeric	Alphanumeric
National	National

Format

```
►► FUNCTION UPPER-CASE ── ( ── argument-1 ── ) ──►◄
```

argument-1
Must be of class alphabetic, alphanumeric, or national and must be at least one character position in length.

The same character string as *argument-1* is returned, except that each lowercase letter is replaced by the corresponding uppercase letter.

The conversion of characters from lowercase to uppercase is based on the specification of character attributes in the applicable runtime locale.

For some locales, the conversion of characters from lowercase to uppercase can result in a character string with a different length than the length of *argument-1*. This can occur for all possible arguments type. For alphabetic and alphanumeric arguments that consist solely of uppercase Latin letters A through Z, lowercase Latin letters a through z, and digits 0 through 9, the length of the returned character string is the same as the length of *argument-1*.

© Copyright IBM Corp. 2021, 2025

Chapter 78. UTF8STRING

The UTF8STRING function converts the argument specified into the corresponding UTF-8 string. The string returned has variable length. Users are advised to allow sufficient length for the receiving argument returned by this function. The maximum length returns is twice the length of the original argument.

The function type is alphanumeric.

Format

```
►► FUNCTION UTF8STRING ── ( ── argument-1 ── ) ►◄
```

argument-1

Must be alphabetic, alphanumeric, DBCS or national, and must be at least one character in length.

© Copyright IBM Corp. 2021, 2025

Chapter 79. VARIANCE

The VARIANCE function returns a numeric value that approximates the variance of its arguments.

The function type is numeric.

Format

```
►► FUNCTION VARIANCE ── ( ┌──argument-1──┐ ) ►◄
                          ◄──────────────┘
```

argument-1
Must be class numeric.

The returned value is the approximation of the variance of the *argument-1* series.

The returned value is defined as the square of the standard deviation of the *argument-1* series. This value is calculated as follows:

1. The difference between each *argument-1* value and the arithmetic mean of the *argument-1* series is calculated and squared.
2. The values obtained are then added together. This quantity is divided by the number of values in the argument series.

If the *argument-1* series consists of only one value, or if the *argument-1* series consists of all variable-occurrence data items and the total number of occurrences for all of them is one, the returned value is zero.

© Copyright IBM Corp. 2021, 2025

Chapter 80. WHEN-COMPILED

The WHEN-COMPILED function returns the date and time that the program was compiled as provided by the system on which the program was compiled.

The function type is alphanumeric.

Format

```
►►─ FUNCTION WHEN-COMPILED ─►◄
```

Reading from left to right, the 21 character positions of the returned value are as follows:

Character positions	Contents
1-4	Four numeric digits of the year in the Gregorian calendar
5-6	Two numeric digits of the month of the year, in the range 01 through 12
7-8	Two numeric digits of the day of the month, in the range 01 through 31
9-10	Two numeric digits of the hours past midnight, in the range 00 through 23
11-12	Two numeric digits of the minutes past the hour, in the range 00 through 59
13-14	Two numeric digits of the seconds past the minute, in the range 00 through 59
15-16	Two numeric digits of the hundredths of a second past the second, in the range 00 through 99. The value 00 is returned if the system on which the function is evaluated does not have the facility to provide the fractional part of a second.
17	Either the character '-' or the character '+'. The character '-' is returned if the local time indicated in the previous character positions is behind Greenwich mean time. The character '+' is returned if the local time indicated is the same as or ahead of Greenwich mean time. The character '0' is returned if the system on which this function is evaluated does not have the facility to provide the local time differential factor.
18-19	If character position 17 is '-', two numeric digits are returned in the range 00 through 12 indicating the number of hours that the reported time is behind Greenwich mean time. If character position 17 is '+', two numeric digits are returned in the range 00 through 13 indicating the number of hours that the reported time is ahead of Greenwich mean time. If character position 17 is '0', the value 00 is returned.
20-21	Two numeric digits are returned in the range 00 through 59 indicating the number of additional minutes that the reported time is ahead of or behind Greenwich mean time, depending on whether character position 17 is '+' or '-', respectively. If character position 17 is '0', the value 00 is returned.

The returned value is the date and time of compilation of the source unit that contains this function. If a program is a contained program, the returned value is the compilation date and time associated with the containing program.

© Copyright IBM Corp. 2021, 2025

Chapter 81. YEAR-TO-YYYY

The YEAR-TO-YYYY function converts *argument-1*, a two-digit year, to a four-digit year. *argument-2*, when added to the year at the time of execution, defines the ending year of a 100-year interval, or sliding century window, into which the year of *argument-1* falls.

The function type is integer.

If the DATEPROC compiler option is in effect, then the returned value is an expanded date field with implicit DATE FORMAT YYYY.

Format

```
►► FUNCTION YEAR-TO-YYYY ── ( ── argument-1 ──┬──────────────┬── ) ──►◄
                                              └─ argument-2 ─┘
```

argument-1
Must be a non-negative integer that is less than 100.

argument-2
Must be an integer. If *argument-2* is omitted, the function is evaluated assuming the value 50 was specified.

The sum of the year at the time of execution and the value of *argument-2* must be less than 10,000 and greater than 1,699.

Examples of return values from the YEAR-TO-YYYY function are shown in the following table.

Current year	***argument-1* value**	***argument-2* value**	**Returned value**
1995	4	23	2004
1995	4	-15	1904
2008	98	23	1998
2008	98	-15	1898

© Copyright IBM Corp. 2021, 2025

Chapter 82. YEARWINDOW

If the DATEPROC compiler option is in effect, the YEARWINDOW function returns the starting year of the century window specified by the YEARWINDOW compiler option.

The returned value is an expanded date field with implicit DATE FORMAT YYYY.

If the NODATEPROC compiler option is in effect, the YEARWINDOW function returns 0.

The function type is integer.

Format

```
►►─ FUNCTION YEARWINDOW ─►◄
```

© Copyright IBM Corp. 2021, 2025

Part 8. Compiler-direction statments and compiler directives

© Copyright IBM Corp. 2021, 2025

Chapter 83. Compiler-directing statements

A *compiler-directing statement* is a statement that causes the compiler to take a specific action during compilation.

You can use compiler-directing statements for the following purposes:

- Extended source library control (BASIS, DELETE, and INSERT statements)
- Source text manipulation (COPY and REPLACE statements)
- Exception handling (USE statement)
- Controlling compiler listings (*CONTROL, *CBL, EJECT, TITLE, SKIP1, SKIP2, and SKIP3 statements)
- Specifying compiler options (CBL and PROCESS statements)
- Specifying COBOL exception handling procedures (USE statements)

The following compiler directing statements have no effect: ENTER, READY or RESET TRACE, SERVICE LABEL, and SERVICE RELOAD.

BASIS statement

The BASIS statement is an extended source text library statement. It provides a complete COBOL program as the source for a compilation.

A complete program can be stored as an entry in a user-defined library and can be used as the source for a compilation. Compiler input is a BASIS statement, optionally followed by any number of INSERT and DELETE statements.

Note: A BASIS statement can be followed only by INSERT or DELETE statements, and can be preceded only by PROCESS(CBL) or *CONTROL(*CBL) statements.

Format

```
►►──┬──────────────────┬──BASIS──┬──basis-name──┬──►◄
    └─sequence-number──┘         └──literal-1───┘
```

sequence-number
Can optionally appear in columns 1 through 6, followed by a space. The content of this field is ignored.

BASIS
Can appear anywhere in columns 1 through 72 in fixed source format, or columns 1 through 252 in extended source format, followed by *basis-name*. There must be no other text in the statement.

basis-name, literal-1
Is the name by which the library entry is known to the system environment.

For rules of formation and processing rules, see the description under *literal-1* and *text-name* of the "COPY statement" on page 564.

The source file remains unchanged after execution of the BASIS statement.

Usage note: If INSERT or DELETE statements are used to modify the COBOL source text provided by a BASIS statement, the sequence field of the COBOL source text must contain numeric sequence numbers in ascending order.

© Copyright IBM Corp. 2021, 2025

PROCESS(CBL) statement

With the PROCESS(CBL) statement, you can specify compiler options to be used in the compilation of the program. The PROCESS(CBL) statement is placed before the IDENTIFICATION DIVISION header of an outermost program.

Format

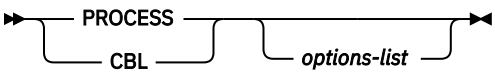

options-list

A series of one or more compiler options, each one separated by a comma or a space.

For more information about compiler options, see *Compiler options* in the *COBOL for Linux on x86 Programming Guide*.

The PROCESS(CBL) statement can be preceded by a sequence number in columns 1 through 6. The first character of the sequence number must be numeric, and PROCESS or CBL can begin in column 8 or after; if a sequence number is not specified, PROCESS or CBL can begin in column 1 or after.

The PROCESS(CBL) statement must end before or at column 72 in fixed source format, or column 252 in extended source format, and options cannot be continued across multiple PROCESS(CBL) statements. However, you can use more than one PROCESS(CBL) statement. Multiple PROCESS(CBL) statements must follow one another with no intervening statements of any other type.

The PROCESS(CBL) statement must be placed before any comment lines or other compiler-directing statements.

*CONTROL (*CBL) statement

With the *CONTROL (or *CBL) statement, you can selectively display or suppress the listing of source code and storage maps throughout the source text.

Format

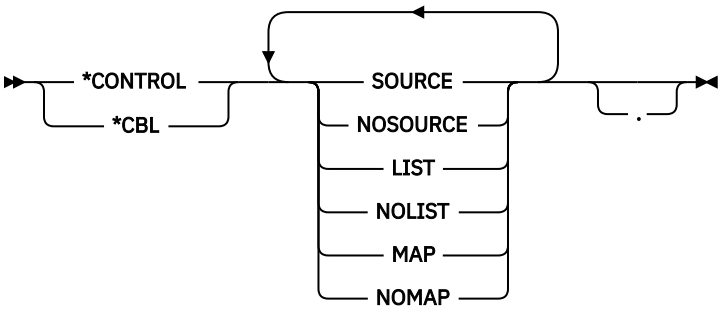

For a complete discussion of the output produced by these options, see *Getting listings* in the *COBOL for Linux on x86 Programming Guide*.

For information about specifying whether listings are encoded in UTF-8 or in the code page specified by the compile-time locale, see *LSTFILE* in the *COBOL for Linux on x86 Programming Guide*.

The *CONTROL and *CBL statements are synonymous. *CONTROL is accepted anywhere that *CBL is accepted.

The characters *CONTROL or *CBL can start in any column beginning with column 7, followed by at least one space or comma and one or more option keywords. The option keywords must be separated by one or

more spaces or commas. This statement must be the only statement on the line, and continuation is not allowed. The statement can be terminated with a period.

The *CONTROL and *CBL statements must be embedded in a program source. For example, in the case of batch applications, the *CONTROL and *CBL statements must be placed between the PROCESS (CBL) statement and the end of the program (or END PROGRAM marker, if specified).

The source line containing the *CONTROL (*CBL) statement will not appear in the source listing.

If an option is defined at installation as a fixed option, that fixed option takes precedence over all of the following parameter and statements:

- PARM (if available)
- CBL statement
- *CONTROL (*CBL) statement

The requested options are handled in the following manner:

1. If an option or its negation appears more than once in a *CONTROL statement, the last occurrence of the option word is used.
2. If the corresponding option has been requested as a parameter to the compiler, then a *CONTROL statement with the negation of the option word must precede the portions of the source text for which listing output is to be inhibited. Listing output then resumes when a *CONTROL statement with the affirmative option word is encountered.
3. If the negation of the corresponding option has been requested as a parameter to the compiler, then that listing is *always* inhibited.
4. The *CONTROL statement is in effect only within the source program in which it is written, including any contained programs. It does not remain in effect across batch compiles of two or more COBOL source programs.

Source code listing

The topic lists statements that control the listing of the input source text lines.

The statement can be any of the following one:

```
*CONTROL SOURCE        [*CBL SOURCE]
*CONTROL NOSOURCE      [*CBL NOSOURCE]
```

If a *CONTROL NOSOURCE statement is encountered and SOURCE has been requested as a compilation option, printing of the source listing is suppressed from this point on. An informational (I-level) message is issued stating that printing of the source has been suppressed.

Object code listing

The compiler always produces an object code listing. The LIST and NOLIST options of the *CONTROL (or *CBL) statement are syntax checked but have no effect on the object code listing.

Storage map listing

The topic lists statements that control the listing of storage map entries occurring in the DATA DIVISION.

The statement can be any of the following one:

```
*CONTROL MAP           [*CBL MAP]
*CONTROL NOMAP         [*CBL NOMAP]
```

If a *CONTROL NOMAP statement is encountered, and MAP has been requested as a compilation option, listing of storage map entries is suppressed from this point on.

For example, either of the following sets of statements produces a storage map listing in which A and B will not appear:

```
*CONTROL NOMAP          *CBL NOMAP
    01  A                   01  A
    02  B                   02  B
*CONTROL MAP            *CBL MAP
```

COPY statement

The COPY statement is a library statement that places prewritten text in a COBOL compilation unit.

Prewritten source code entries can be included in a compilation unit at compile time. Thus, an installation can use standard file descriptions, record descriptions, or procedures without recoding them. These entries and procedures can then be saved in user-created libraries; they can then be included in programs and class definitions by means of the COPY statement.

Compilation of the source code containing COPY statements is logically equivalent to processing all COPY statements before processing the resulting source text.

The effect of processing a COPY statement is that the library text associated with *text-name* is copied into the compilation unit, logically replacing the entire COPY statement, beginning with the word COPY and ending with the period, inclusive. When the REPLACING phrase is not specified, the library text is copied unchanged.

Format

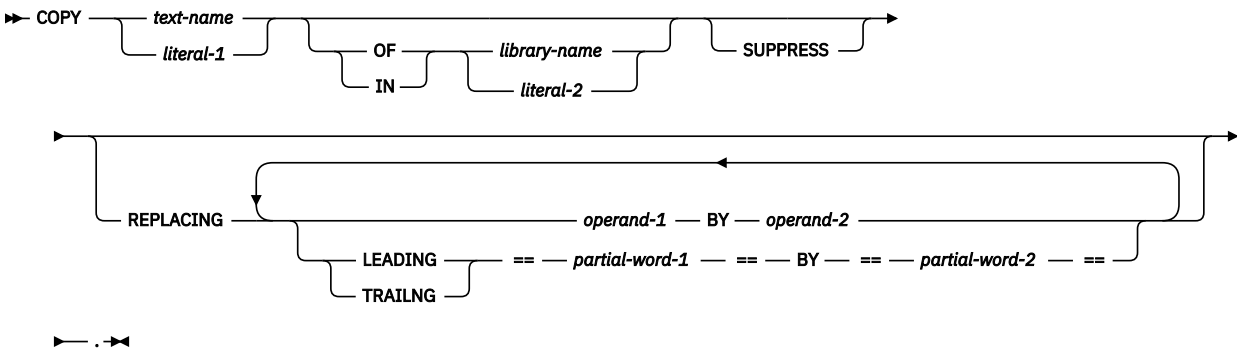

text-name, library-name

text-name identifies the copy text. *library-name* identifies where the copy text exists.

- Can be from 1-30 characters in length
- Can contain the following characters: Latin uppercase letters A-Z, Latin lowercase letters a-z, digits 0-9, hyphen, and underscore

Neither *text-name* nor *library-name* need to be unique within a program. They can be identical to other user-defined words in the program.

text-name need not be qualified. If *text-name* is not qualified, a library-name of SYSLIB is assumed.

literal-1 , literal-2

Must be alphanumeric literals. *literal-1* identifies the copy text. *literal-2* identifies where the copy text exists.

The literal can be from 1-160 characters in length.

The uniqueness of *text-name* and *library-name* is determined after the formation and conversion rules for a system-dependent name have been applied.

For information about the mapping of characters in the *text-name*, *library-name*, and literals, see *Compiler-directing statements* in the *COBOL for Linux on x86 Programming Guide*.

operand-1*, *operand-2

Can be pseudo-text, an identifier, a function-identifier, a literal, or a COBOL word (except the word COPY). For details, see "REPLACING phrase" on page 566.

Library text can consist of or include any words, identifiers, or literals that can be written in the source text. This includes multibyte user-defined words, multibyte literals, and national literals.

partial-word-1*, *partial-word-2

Can be a partial-word. For details, see "REPLACING phrase" on page 566.

Each COPY statement must be preceded by a space and ended with a separator period.

A COPY statement can appear in the source text anywhere a character string or a separator can appear.

COPY statements can be nested, and any COPY statement in a chain of nested COPY statements can have the REPLACING phrase, provided there is only one such COPY statement in the chain. When the REPLACING phrase is specified for a COPY statement that appears in a chain of nested COPY statements, the REPLACING phrase applies to all library text that is included by COPY statements nested under the COPY statement that has the REPLACING phrase.

A nested COPY statement cannot cause recursion. That is, a COPY member can be named only once in a set of nested COPY statements until the end-of-file for that COPY member is reached. For example, assume that the source text contains the statement: `COPY X.` and library text X contains the statement: `COPY Y.`.

In this case, library text contained in Y must not have a `COPY X` or a `COPY Y` statement.

Debugging lines are permitted within library text and pseudo-text. Text words within a debugging line participate in the matching rules as if the "D" did not appear in the indicator area. A debugging line is specified within pseudo-text if the debugging line begins in the source text after the opening pseudo-text delimiter but before the matching closing pseudo-text delimiter.

If additional lines are introduced into the source text as a result of a COPY statement, each text word introduced appears on a debugging line if the COPY statement begins on a debugging line or if the text word being introduced appears on a debugging line in library text. When a text word specified in the BY phrase is introduced, it appears on a debugging line if the first library text word being replaced is specified on a debugging line.

When a COPY statement is specified on a debugging line, the copied text is treated as though it appeared on a debugging line, except that comment lines in the text appear as comment lines in the resulting source text.

If the word COPY appears in a comment-entry, or in the place where a comment-entry can appear, it is considered part of the comment-entry.

After all COPY and REPLACE statements have been processed, a debugging line will be considered to have all the characteristics of a comment line, if the WITH DEBUGGING MODE clause is not specified in the SOURCE-COMPUTER paragraph.

Comment lines, inline comments, or blank lines can occur in library text. Comment lines, inline comments, or blank lines appearing in library text are copied into the resultant source text unchanged with the following exception: a comment line, an inline comment, or a blank line in library text is not copied if that comment line, inline comment, or blank line appears within the sequence of text words that match *operand-1* (see "Comparison and replacement rules" on page 567).

Lines containing *CONTROL (*CBL), EJECT, SKIP1, SKIP2, SKIP3, or TITLE statements can occur in library text. Such lines are treated as comment lines during COPY statement processing.

The syntactic correctness of the entire COBOL source text cannot be determined until all COPY and REPLACE statements have been completely processed, because the syntactic correctness of the library text cannot be independently determined.

Library text copied from the library is placed into the same area of the resultant program as it is in the library. Library text must conform to the rules for the 85 COBOL Standard format.

Note: Characters outside those defined for COBOL words and separators must not appear in library text or pseudo-text except in comment lines, inline comments, comment-entries, alphanumeric literals, DBCS literals, or national literals.

SUPPRESS phrase

The SUPPRESS phrase specifies that the library text is not to be printed on the source listing.

REPLACING phrase

When the REPLACING phrase is specified, the library text is copied, and each properly matched occurrence of *operand-1* or *partial-word-1* within the library text is replaced by the associated *operand-2* or *partial-word-2*.

In the discussion that follows, when the LEADING or TRAILING keyword of the REPLACING phrase is specified, each operand of the REPLACING phrase must be a partial-word. Otherwise, each *operand* can consist of one of the following items:

- Pseudo-text
- An identifier
- A literal
- A COBOL word (except the word COPY)
- A function-identifier
- partial-word

pseudo-text

A sequence of character-strings or separators, or both, bounded by, but not including, pseudo-text delimiters (==). Both characters of each pseudo-text delimiter must appear on one line; however, character-strings within pseudo-text can be continued.

Individual character-strings within pseudo-text can be up to 322 characters long; they can be continued subject to the normal continuation rules for source code format.

Keep in mind that a character-string must be delimited by separators. For more information, see Chapter 1, “Characters,” on page 3

pseudo-text-1 refers to pseudo-text when used for *operand-1*, and *pseudo-text-2* refers to pseudo-text when used for *operand-2*.

pseudo-text-1 can consist solely of the separator comma or separator semicolon. *pseudo-text-2* can be null; it can consist solely of space characters, comment lines, or inline comments.

Pseudo-text must not contain the word COPY.

Each text word in *pseudo-text-2* that is to be copied into the program is placed in the same area of the resultant program as the area in which it appears in *pseudo-text-2*.

Pseudo-text can consist of or include any words (except COPY), identifiers, or literals that can be written in the source text. This includes multibyte user-defined words, DBCS literals, and national literals.

Multibyte user-defined words must be wholly formed; that is, there is no partial-word replacement for multibyte words.

Words or literals containing multibyte characters cannot be continued across lines.

Use pseudo-text when you replace a PICTURE character-string. To avoid ambiguities, the entire PICTURE clause, including the keyword PICTURE or PIC, should be specified in *pseudo-text-1*.

identifier
Can be defined in any section of the DATA DIVISION.

literal
Can be numeric, alphanumeric, DBCS, or national.

word
Can be any single COBOL word (except COPY), including multibyte user-defined words. Multibyte user-defined words must be wholly formed. You cannot replace part of a multibyte word.

You can include the nonseparator COBOL characters (for example, + * / $ < > =) as part of a COBOL word when used as REPLACING operands. In addition, a hyphen or underscore can be at the beginning of the word or a hyphen can be at the end of the word.

function-identifier
A sequence of character strings and separators that uniquely references the data item that results from the evaluation of a function. For more information, see "Function-identifier" on page 68.

partial-word
A single text word that is bounded by, but not including, pseudo-text delimiters `(==)`. Both characters of each pseudo-text delimiter must appear on one line. However, the text word within a partial-word can be continued.

The following rules apply to *partial-word-1* and *partial-word-2*:

- *partial-word-1* consists of one text word.
- *partial-word-2* consists of zero or one text word.
- *partial-word-1* and *partial-word-2* cannot be an alphanumeric literal, national literal, DBCS literal, or multibyte word.

For purposes of matching, each identifier, literal, word, or function-identifier is treated as pseudo-text that contains only that identifier, literal, word, or function-identifier, respectively.

Comparison and replacement rules

This topic introduces detailed rules for comparison and replacement.

- Arithmetic and logical operators are considered text words and can be replaced only through a pseudo-text operand.
- Beginning and ending blanks are not included in the text comparison process. Embedded blanks are used in the text comparison process to separate multiple text words.
- When *operand-1* is a figurative constant, *operand-1* matches only the same exact figurative constant. For example, if `ALL "AB"` is specified in *operand-1*, `"ABAB"` in the library text is not considered a match; only `ALL "AB"` is considered a match.
- Any separator comma, semicolon, or space that precedes the leftmost word in the library text is copied into the source text. Beginning with the leftmost library text word and the first *operand-1* or *partial-word-1* specified in the REPLACING phrase, the entire REPLACING operand that precedes the keyword BY is compared to an equivalent number of contiguous library text words.
- *operand-1* matches the library text only if the ordered sequence of text words that forms *operand-1* is equal, character for character, to the ordered sequence of library words. For national characters, the sequence of national characters must be equal, national character for national character, to the ordered sequence of library words.

- When the LEADING phrase is specified, *partial-word-1* matches the library text only if the contiguous sequence of characters that forms *partial-word-1* is equal, character for character, to an equal number of contiguous characters that start with the leftmost character position of a library text word.

  When the TRAILING phrase is specified, *partial-word-1* matches the library text only if the contiguous sequence of characters that forms *partial-word-1* is equal, character for character, to an equal number of contiguous characters that end with the rightmost character position of a library text word.
- For matching purposes, each occurrence of a separator comma, a separator semicolon, or a sequence of one or more separator spaces is considered to be a single space.

  However, when *operand-1* or *partial-word-1* consists solely of a separator comma or separator semicolon, the *operand-1* or *partial-word-1* participates in the match as a text word. In this case, the space that follows the comma or semicolon separator can be omitted.

  When the library text contains a closing quotation mark that is not immediately followed by a separator space, a separator comma, a separator semicolon, or a separator period, the closing quotation mark is considered a separator quotation mark.
- If no match occurs, the comparison is repeated with each successive *operand-1* or *partial-word-1* if specified, until either a match is found or no further REPLACING operands exist.
- Whenever a match occurs between *operand-1* and the library text, the corresponding *operand-2* is copied into the source text. Whenever a match occurs between *partial-word-1* and the library text word, the matched characters of that library text word are either replaced by *partial-word-2* or deleted when *partial-word-2* consists of zero text words.
- When all operands are compared and no match occurs, the leftmost library text word is copied into the source text.
- Once a library text word is finished being processed and is either copied into the source text unchanged or replaced because of a match, the next successive uncopied library text word is then considered to be the leftmost text word, and the comparison cycle starts again, beginning with the first occurrence of *operand-1* or *partial-word-1*. The process continues until the rightmost library text word is compared.
- The sequence of text words in the library text, *pseudo-text-1*, and *partial-word-1* is determined by the rules for reference format. For more information, see Chapter 6, “Reference format,” on page 45.
- When text words are placed in the source text, additional spaces are introduced only between text words where there already exists a space, including the assumed space between source lines.
- The following rules apply to comment lines, inline comments, and blank lines:
  - Comment lines, inline comments, or blank lines in the library text, *pseudo-text-1*, or *partial-word-1* are ignored for purposes of matching.
  - Comment lines, inline comments, or blank lines in the library text are copied into the resultant source text unchanged with the following exception: a comment line, an inline comment, or a blank line in the library text is not copied if that comment line, inline comment, or blank line appears in the sequence of text words that match *pseudo-text-1* or *partial-word-1*.
  - Comment lines, inline comments, or blank lines in *pseudo-text-2* or *partial-word-2* are copied into the resultant program unchanged whenever *pseudo-text-2* or *partial-word-2* is placed into the source text as a result of text replacement.
  - If the word COPY appears in a comment-entry, or in the place where a comment-entry can appear, it is considered part of the comment-entry.
- COPY REPLACING does not affect the EJECT, SKIP1, SKIP2, SKIP3, or TITLE compiler-directing statements.
- Lines that contain *CONTROL (*CBL), EJECT, SKIP1, SKIP2, SKIP3, or TITLE statements can appear in the library text. Such lines are copied into the resultant source text unchanged.
- The following rules apply to debugging lines:
  - Debugging lines are permitted in library text and pseudo-text. Text words within a debugging line participate in the matching rules as if the letter "D" did not appear in the indicator area. A debugging

line is specified within pseudo-text if the debugging line begins in the source text after the opening pseudo-text delimiter but before the matching closing pseudo-text delimiter.

  - If more lines are introduced into the source text as a result of a COPY statement, each text word that is introduced appears on a debugging line if the COPY statement begins on a debugging line or if the text word that is introduced appears on a debugging line in library text. When a text word specified in the BY phrase is introduced, it appears on a debugging line if the first library text word that is being replaced is specified on a debugging line.
  - When a COPY statement is specified on a debugging line, the copied text is treated as though it appeared on a debugging line, except that comment lines in the text appear as comment lines in the resulting source text.
  - After all COPY and REPLACE statements are processed, a debugging line will be considered to have all the characteristics of a comment line, if the WITH DEBUGGING MODE clause is not specified in the SOURCE-COMPUTER paragraph.
- The syntactic correctness of the entire COBOL source text cannot be determined until all COPY and REPLACE statements have been completely processed, because the syntactic correctness of the library text cannot be independently determined.
- (This rule applies to pseudo-text only.) If the source text has occurrences of a dummy operand `:TAG:` that is delimited by colons in the program text, the compiler replaces the dummy operand with the required text. Example 3 shows how it is used with the dummy operand `:TAG:`. The colons serve as separators and make TAG a stand-alone operand.
- The COPY statement with REPLACING phrase can be used to replace parts of words, either by using the `LEADING|TRAILING` *`partial-word-1`* `BY` *`partial-word-2`* phrase, or by using the pseudo-text `:TAG:` method.
- After replacement, text words are placed in the source text according to the 85 COBOL Standard format rules.

Comparison and replacement examples

This topic shows examples of comparison and replacement.

Sequences of code (such as file and data descriptions, error, and exception routines) that are common to a number of programs can be saved in a library, and then used with the COPY statement. If naming conventions are established for such common code, the REPLACING phrase need not be specified. If the names change from one program to another, the REPLACING phrase can be used to supply meaningful names for this program.

Example 1

In this example, the library text PAYLIB consists of the following DATA DIVISION entries:

```
01  A.
  02  B    PIC S99.
  02  C    PIC S9(5)V99.
  02  D    PIC S9999 OCCURS 1 TO 52 TIMES
      DEPENDING ON B OF A.
```

You can use the COPY statement in the DATA DIVISION of a program as follows:

```
COPY PAYLIB.
```

In this program, the library text is copied. The resulting text is treated as if it were written as follows:

```
01  A.
  02  B    PIC S99.
  02  C    PIC S9(5)V99.
  02  D    PIC S9999 OCCURS 1 TO 52 TIMES
      DEPENDING ON B OF A.
```

Example 2

To change some or all of the names within the library text, you can use the REPLACING phrase:

```
COPY PAYLIB REPLACING A BY PAYROLL
                      B BY PAY-CODE
                      C BY GROSS-PAY
                      D BY HOURS.
```

In this program, the library text is copied. The resulting text is treated as if it were written as follows:

```
01  PAYROLL.
  02  PAY-CODE    PIC S99.
  02  GROSS-PAY   PIC S9(5)V99.
  02  HOURS       PIC S9999 OCCURS 1 TO 52 TIMES
      DEPENDING ON PAY-CODE OF PAYROLL.
```

The changes that are shown are made only for this program. The text remains unchanged as it appears in the library.

Example 3

If the following conventions are followed in the library text, parts of names (for example, the prefix portion of data names) can be changed with the REPLACING phrase.

In this example, the library text PAYLIB consists of the following DATA DIVISION entries:

```
01  :TAG:.
  02  :TAG:-WEEK          PIC S99.
  02  :TAG:-GROSS-PAY     PIC S9(5)V99.
  02  :TAG:-HOURS         PIC S999  OCCURS 1 TO 52 TIMES
      DEPENDING ON :TAG:-WEEK OF :TAG:.
```

You can use the COPY statement in the DATA DIVISION of a program as follows:

```
COPY PAYLIB REPLACING ==:TAG:== BY ==Payroll==.
```

Usage Note: In this example, the required use of colons or parentheses as delimiters in the library text. Colons are recommended for clarity because parentheses can be used for a subscript, for instance in referencing a table element.

In this program, the library text is copied. The resulting text is treated as if it were written as follows:

```
01  PAYROLL.
  02  PAYROLL-WEEK        PIC S99.
  02  PAYROLL-GROSS-PAY   PIC S9(5)V99.
  02  PAYROLL-HOURS       PIC S999  OCCURS 1 TO 52 TIMES
      DEPENDING ON PAYROLL-WEEK OF PAYROLL.
```

The changes that are shown are made only for this program. The text remains unchanged as it appears in the library.

Example 4

This example shows how to selectively replace level numbers without replacing the numbers in the PICTURE clause:

```
COPY xxx REPLACING ==(01)== BY ==(01)==
                   == 01 == BY == 05 ==.
```

Example 5

This example demonstrates use of the LEADING keyword of the REPLACING phrase in the COPY statement. The library text PAYLIB consists of the following DATA DIVISION entries:

```
01  DEPT.
  02  DEPT-WEEK       PIC S99.
  02  DEPT-GROSS-PAY  PIC S9(5)V99.
  02  DEPT-HOURS      PIC S999 OCCURS 1 TO 52 TIMES
      DEPENDING ON DEPT-WEEK OF DEPT.
```

You can use the COPY statement in the DATA DIVISION of a program as follows:

```
COPY PAYLIB REPLACING LEADING == DEPT == BY == PAYROLL ==.
```

In this program, the library text is copied. The resulting text is treated as if it were written as follows:

```
01  PAYROLL.
  02  PAYROLL-WEEK       PIC S99.
  02  PAYROLL-GROSS-PAY  PIC S9(5)V99.
  02  PAYROLL-HOURS      PIC S999 OCCURS 1 TO 52 TIMES
      DEPENDING ON PAYROLL-WEEK OF PAYROLL.
```

The changes that are shown are made only for this program. The text remains unchanged as it appears in the library.

Example 6

This example demonstrates use of the TRAILING keyword of the REPLACING phrase in the COPY statement. The library text PAYLIB consists of the following DATA DIVISION entries:

```
01  PAYROLL.
  02  PAYROLL-WEEK       PIC S99.
  02  PAYROLL-GROSS-PAY  PIC S9(5)V99.
  02  PAYROLL-HOURS      PIC S999 OCCURS 1 TO 52 TIMES
      DEPENDING ON PAYROLL-WEEK OF PAYROLL.
```

You can use the COPY statement in the DATA DIVISION of a program as follows:

```
COPY PAYLIB REPLACING TRAILING == GROSS-PAY == BY == NET-PAY ==.
```

In this program, the library text is copied. The resulting text is treated as if it were written as follows:

```
01  PAYROLL.
  02  PAYROLL-WEEK     PIC S99.
  02  PAYROLL-NET-PAY  PIC S9(5)V99.
  02  PAYROLL-HOURS    PIC S999 OCCURS 1 TO 52 TIMES
      DEPENDING ON PAYROLL-WEEK OF PAYROLL.
```

The changes that are shown are made only for this program. The text remains unchanged as it appears in the library.

Example 7

This example demonstrates a scenario where two types of partial-word replacement are specified in a single REPLACING phrase. The library text PAYLIB consists of the following DATA DIVISION entries:

```
01  PAYROLL.
  02  PAYROLL-WEEK     PIC S99.
  02  :TAG:-GROSS-PAY  PIC S9(5)V99.
  02  PAYROLL-HOURS    PIC S999 OCCURS 1 TO 52 TIMES
      DEPENDING ON PAYROLL-WEEK OF PAYROLL.
```

You can use the COPY statement in the DATA DIVISION of a program as follows:

```
COPY PAYLIB REPLACING == :TAG: == BY == PAYROLL ==
            TRAILING == GROSS-PAY == BY == NET-PAY ==.
```

In this program, the library text is copied. The resulting text is treated as if it were written as follows:

```
01  PAYROLL.
  02  PAYROLL-WEEK       PIC S99.
  02  PAYROLL-GROSS-PAY  PIC S9(5)V99.
  02  PAYROLL-HOURS      PIC S999 OCCURS 1 TO 52 TIMES
      DEPENDING ON PAYROLL-WEEK OF PAYROLL.
```

Two types of partial-word replacement are specified in the same REPLACING operation, but as usual, one replacement is done on a single library text word. Therefore, even though `:TAG:-GROSS-PAY` is considered a match with the first operand of both replacement operations, after the first match and replacement is performed, no more replacement is performed on that word.

The changes that are shown are made only for this program. The text remains unchanged as it appears in the library.

Example 8

This example demonstrates support for the REPLACING phrase in a chain of nested COPY statements. In this example, it is the outermost COPY statement that has the REPLACING phrase, but note that the REPLACING phrase can be specified on any of the nested COPY statements in the chain, provided it is specified on only one of them. The library text PAYLIB consists of the following DATA DIVISION entries:

```
01  PAYROLL.
  02  PAYROLL-WEEK     PIC S99.
  02  :TAG:-GROSS-PAY  PIC S9(5)V99.
  02  PAYROLL-HOURS    PIC S999 OCCURS 1 TO 52 TIMES
      DEPENDING ON PAYROLL-WEEK OF PAYROLL.
      COPY PAYLIB2
```

The library text PAYLIB2 consists of the following DATA DIVISION entries:

```
01  PAYROLL2.
  02  PAYROLL2-WEEK     PIC S99.
  02  :TAG:2-GROSS-PAY  PIC S9(5)V99.
  02  PAYROLL2-HOURS    PIC S999 OCCURS 1 TO 52 TIMES
      DEPENDING ON PAYROLL2-WEEK OF PAYROLL2.
```

You can use the COPY statement in the DATA DIVISION of a program as follows:

```
COPY PAYLIB REPLACING == :TAG: == BY == PAYROLL ==
            TRAILING == GROSS-PAY == BY == NET-PAY ==.
```

In this program, the library text is copied. The resulting text is treated as if it were written as follows:

```
01  PAYROLL.
  02  PAYROLL-WEEK       PIC S99.
  02  PAYROLL-NET-PAY    PIC S9(5)V99.
  02  PAYROLL-HOURS      PIC S999 OCCURS 1 TO 52 TIMES
      DEPENDING ON PAYROLL-WEEK OF PAYROLL.

01  PAYROLL2.
  02  PAYROLL2-WEEK      PIC S99.
  02  PAYROLL2-NET-PAY   PIC S9(5)V99.
  02  PAYROLL2-HOURS     PIC S999 OCCURS 1 TO 52 TIMES
      DEPENDING ON PAYROLL2-WEEK OF PAYROLL2.
```

The REPLACING phrase in the outermost COPY statement applies not only to the library text in PAYLIB but also to the text in PAYLIB2.

The changes that are shown are made only for this program. The text remains unchanged as it appears in the library.

DELETE statement

The DELETE statement is an extended source library statement. It removes COBOL statements from a source program that was included by a BASIS statement.

Format

```
►►──┬──────────────────────┬── DELETE ── sequence-number-field ──►◄
    └── sequence-number ───┘
```

sequence-number
Can optionally appear in columns 1 through 6, followed by a space. The content of this field is ignored.

DELETE
Can appear anywhere within columns 1 through 72 in fixed source format, or columns 1 through 252 in extended source format. The keyword DELETE must be followed by a space and the *sequence-number-field*. There must be no other text in the statement.

sequence-number-field
Each number must be equal to a *sequence-number* in the BASIS source program. This *sequence-number* is the six-digit number the programmer assigns in columns 1 through 6 of the COBOL coding form. The numbers referenced in the *sequence-number-field* of INSERT or DELETE statements must always be specified in ascending numeric order.

The *sequence-number-field* must be one of the following options:

- A single number
- A series of single numbers
- A range of numbers (indicated by separating the two bounding numbers of the range by a hyphen)
- A series of ranges of numbers
- Any combination of one or more single numbers and one or more ranges of numbers

Each entry in the *sequence-number-field* must be separated from the preceding entry by a comma followed by a space. For example:

```
000250 DELETE  000010-000050, 000400, 000450
```

Source program statements can follow a DELETE statement. These source program statements are then inserted into the BASIS source program before the statement following the last statement deleted (that is, in the example above, before the next statement following deleted statement 000450).

If a DELETE statement begins in column 12 or higher and a valid *sequence-number-field* does not follow the keyword DELETE, the compiler assumes that this DELETE statement is a COBOL DELETE statement.

Usage note: If INSERT or DELETE statements are used to modify the COBOL source program provided by a BASIS statement, the sequence field of the COBOL source program must contain numeric sequence numbers in ascending order. The source file remains unchanged. Any INSERT or DELETE statements referring to these sequence numbers must occur in ascending order.

EJECT statement

The EJECT statement specifies that the next source statement is to be printed at the top of the next page.

Format

```
►► EJECT ──┬──────┬──►◄
           └──.───┘
```

The EJECT statement must be the only statement on the line. It can be written in either Area A or Area B, and can be terminated with a separator period.

The EJECT statement must be embedded in a program source. For example, in the case of batch applications, the EJECT statement must be placed between the CBL (PROCESS) statement and the end of the program (or the END PROGRAM marker, if specified).

The EJECT statement has no effect on the compilation of the source unit itself.

ENTER statement

The ENTER statement is designed to facilitate the use of more than one source language in the same source program. However, only COBOL is allowed in the source program.

The ENTER statement is syntax checked but has no effect on the execution of the program.

Format

```
►► ENTER ── language-name-1 ──┬──────────────────┬── . ►◄
                              └── routine-name-1 ─┘
```

language-name-1
A system name that has no defined meaning. It must be either a correctly formed user-defined word or the word "COBOL." At least one character must be alphabetic.

routine-name-1
Must follow the rules for formation of a user-defined word. At least one character must be alphabetic.

INSERT statement

The INSERT statement is a library statement that adds COBOL statements to a source program that was included by a BASIS statement.

Format

```
►► ┬──────────────────┬── INSERT ── sequence-number-field ►◄
   └── sequence-number ─┘
```

sequence-number
Can optionally appear in columns 1 through 6, followed by a space. The content of this field is ignored.

INSERT
Can appear anywhere within columns 1 through 72 in fixed source format, or columns 1 through 252 in extended source format, followed by a space and the *sequence-number-field*. There must be no other text in the statement.

sequence-number-field

A number that must be equal to a *sequence-number* in the BASIS source program. This *sequence-number* is a six-digit number that the programmer assigns in columns 1 through 6 of the COBOL source line.

The numbers referenced in the *sequence-number-field* of INSERT or DELETE statements must always be specified in ascending numeric order.

The *sequence-number-field* must be a single number (for example, 000130). At least one new source program statement must follow the INSERT statement for insertion after the statement number specified by the *sequence-number-field*.

New source program statements following the INSERT statement can include any COBOL syntax.

Usage note: If INSERT or DELETE statements are used to modify the COBOL source program provided by a BASIS statement, the sequence field of the COBOL source program must contain numeric sequence numbers in ascending order. The source file remains unchanged. Any INSERT or DELETE statements referring to these sequence numbers must occur in ascending order.

READY or RESET TRACE statement

The READY or RESET TRACE statement was designed to trace the execution of procedures. The READY or RESET TRACE statement can appear only in the PROCEDURE DIVISION, but has no effect on your program.

Format

```
►►─┬─ READY ─┬─ TRACE ── . ─►◄
   └─ RESET ─┘
```

You can trace the execution of procedures by using the USE FOR DEBUGGING declarative as described in *Example: USE FOR DEBUGGING* in the *COBOL for Linux on x86 Programming Guide*.

REPLACE statement

The REPLACE statement is used to replace source text.

A REPLACE statement can occur anywhere in the source text that a character-string can occur. It must be preceded by a separator period except when it is the first statement in a separately compiled program. It must ends with a separator period.

The REPLACE statement provides a means of applying a change to an entire COBOL compilation group, or part of a compilation group, without manually having to find and modify all places that need to be changed. It is an easy method of doing simple string substitutions. It is similar in action to the REPLACING phrase of the COPY statement, except that it acts on the entire source text, not just on the text in COPY libraries.

If the word REPLACE appears in a comment-entry or in the place where a comment-entry can appear, it is considered part of the comment-entry.

Format 1

```
>>─ REPLACE ─>
                  ┌──────────────────────────────────────────────────────────────┐
                  v                                                              |
>──┬──────────────────────────────────────────────────────────────────────────┬──>
  |  == ─ pseudo-text-1 ─ == ─ BY ─ == ─ pseudo-text-2 ─ ==                    |
  |                                                                            |
  |  ┌─ LEADING ─┐  == ─ partial-word-1 ─ == ─ BY ─ == ─ partial-word-2 ─ ==  |
  |  └─ TRAILING ─┘                                                            |
  └────────────────────────────────────────────────────────────────────────────┘
>─ . ─><
```

Each matched occurrence of *pseudo-text-1* in the source text is replaced by the corresponding *pseudo-text-2*.

Format 2

```
>>─ REPLACE OFF. ─><
```

Any text replacement currently in effect is discontinued with the format-2 form of REPLACE. If format 2 is not specified, a specific occurrence of the REPLACE statement is in effect from the point at which it is specified until the next occurrence of a REPLACE statement or the end of the separately compiled program.

pseudo-text-1

Must contain one or more text words. Character-strings can be continued in accordance with normal source code rules.

pseudo-text-1 can consist solely of a separator comma or a separator semicolon.

pseudo-text-2

Can contain zero, one, or more text words. Character strings can be continued in accordance with normal source code rules.

pseudo-text-1 and *pseudo-text-2* can contain any text words (except the word COPY) that can be written in source text, including national literals, DBCS literals, and multibyte user-defined words.

Characters outside those allowed COBOL words and separators must not appear in library text or pseudo-text except in comment lines, comment-entries, inline comments, alphanumeric literals, DBCS literals, or national literals.

Multibyte user-defined words must be wholly formed; that is, there is no partial-word replacement for multibyte words.

pseudo-text-1 and *pseudo-text-2* can contain single-byte and multibyte characters in comment lines or comment entries.

Individual character-strings within pseudo-text can be up to 322 characters long, except that strings that contain multibyte characters cannot be continued.

partial-word-1, partial-word-2

A single text word that is bounded by, but not including, pseudo-text delimiters (==). Both characters of each pseudo-text delimiter must appear on one line. However, the text word within a partial-word can be continued.

The following rules apply to *partial-word-1* and *partial-word-2*:

- *partial-word-1* consists of one text word.
- *partial-word-2* consists of zero or one text word.

- *partial-word-1* and *partial-word-2* cannot be an alphanumeric literal, national literal, DBCS literal, or multibyte word.

The compiler processes REPLACE statements in source text after the processing of any COPY statements. COPY must be processed first to assemble complete source text. Then, REPLACE can be used to modify that source text, performing simple string substitution. REPLACE statements cannot themselves contain COPY statements.

The text that is produced as a result of the processing of a REPLACE statement must not contain a REPLACE statement.

Continuation rules for pseudo-text

The character-strings and separators that comprise pseudo-text can start in either Area A or Area B. However, if a hyphen is in the indicator area of a line, and that hyphen follows the opening pseudo-text delimiter, Area A of the line must be blank, and the normal rules for continuation of lines apply to the formation of text words. See "Continuation lines" on page 48.

Example

The following example shows the use of REPLACE statement to replace source text.

```
IDENTIFICATION DIVISION.
PROGRAM-ID. REPLEXMP.
DATA DIVISION.
WORKING-STORAGE SECTION.
    REPLACE =="(Hello, World!)"== BY =="(Hello, Mom!)"==.
01 WS-STRING1 PIC X(30) VALUE "(Hello, World!)".
01 WS-STRING2 PIC X(30) VALUE "Hello, COBOL!".
PROCEDURE DIVISION.
    DISPLAY "Original: " WS-STRING1
    REPLACE LEADING ==XX-==  BY ====
                    ==:TAG:==  BY ==STRING==
            TRAILING ==1== BY ==2==.
    DISPLAY "Modified: " XX-WS-:TAG:1
    REPLACE OFF.
    GOBACK.
```

The output of this program is:

```
Original: (Hello, Mom!)
Modified: Hello, COBOL!
```

Comparison rules

The comparison operation that determines text replacement starts with the leftmost source text word that follows the REPLACE statement, and with the first word of *pseudo-text-1* or *partial-word-1*.

- *pseudo-text-1* is compared to an equivalent number of contiguous source text words. *pseudo-text-1* matches the source text only if the ordered sequence of text words that forms *pseudo-text-1* is equal, character for character, to the ordered sequence of source text words. For national characters, the sequence of national characters must be equal, national character for national character, to the ordered sequence of library words.
- When the LEADING phrase is specified, *partial-word-1* matches the source text only if the contiguous sequence of characters that forms *partial-word-1* is equal, character for character, to an equal number of contiguous characters that start with the leftmost character position of a source text word.

  When the TRAILING phrase is specified, *partial-word-1* matches the source text only if the contiguous sequence of characters that forms *partial-word-1* is equal, character for character, to an equal number of contiguous characters that end with the rightmost character position of a source text word.
- For matching purposes, each occurrence of a separator comma, a separator semicolon, or a sequence of one or more separator spaces is considered to be a single space.

However, when *pseudo-text-1* or *partial-word-1* consists solely of a separator comma or separator semicolon, the comma or semicolon participates in the match as a text word. In this case, the space that follows the comma or semicolon separator can be omitted.

When the source text contains a closing quotation mark that is not immediately followed by a separator space, a separator comma, a separator semicolon, or a separator period, the closing quotation mark is considered a separator quotation mark.

- If no match occurs, the comparison is repeated with each successive occurrence of *pseudo-text-1* or *partial-word-1* if specified, until either a match is found or no further REPLACING operands exist.
- When all occurrences of *pseudo-text-1* or *partial-word-1* are compared and no match occurs, the next successive source text word is then considered to be the leftmost source text word, and the comparison cycle starts again, beginning with the first occurrence of *pseudo-text-1* or *partial-word-1*.
- Whenever a match occurs between *pseudo-text-1* and the source text, the corresponding *pseudo-text-2* replaces the matched text in the source text. Whenever a match occurs between *partial-word-1* and the source text word, the matched characters of that source text word are either replaced by *partial-word-2* or deleted if *partial-word-2* consists of zero text words.The source text word that immediately follows the rightmost text word that participated in the match is then considered as the leftmost source text word. The comparison cycle starts again, beginning with the first occurrence of *pseudo-text-1* or *partial-word-1*.
- The comparison operation continues until the rightmost text word in the source text that is within the scope of the REPLACE statement has either participated in a match, or been considered as a leftmost source text word and participated in a complete comparison cycle.

Replacement rules

This topic introduces detailed rules for replacement.

- The sequence of text words in the source text, *pseudo-text-1*, and *partial-word-1* is determined by the rules for reference format. For more information, see Chapter 6, “Reference format,” on page 45.
- Text words that are inserted into the source text as a result of processing a REPLACE statement are placed in the source text according to the rules for reference format. When inserting text words of *pseudo-text-2* or *partial-word-2* into the source text, additional spaces are introduced only between text words where there already exists a space, including the assumed space between source lines.
- If more lines are introduced into the source text as a result of the processing of REPLACE statements, the indicator area of the introduced lines contains the same character as the line on which the text being replaced begins, unless that line contains a hyphen, in which case the introduced line contains a space.
- If any literal within *pseudo-text-2* or *partial-word-2* is of a length too great to be accommodated on a single line without continuation to another line in the resultant program, and the literal is not being placed on a debugging line, more continuation lines are introduced that contain the remainder of the literal. If replacement requires the continued literal to be continued on a debugging line, the program is in error.
- Each word in *pseudo-text-2* or *partial-word-2* that is to be placed into the resultant program begins in the same area of the resultant program as it appears in *pseudo-text-2* or *partial-word-2*.
- The following rules apply to comment lines, inline comments, and blank lines:
  - Comment lines, inline comments, or blank lines in the source text, *pseudo-text-1*, or *partial-word-1* are ignored for purposes of matching.
  - Comment lines, inline comments, or blank lines in the source text are copied into the resultant source text unchanged with the following exception: a comment line, an inline comment, or a blank line in the source text is not copied if that comment line, inline comment, or blank line appears in the sequence of text words that match *pseudo-text-1* or *partial-word-1*.
  - Comment lines, inline comments, or blank lines in *pseudo-text-2* or *partial-word-2* are copied into the resultant program unchanged whenever *pseudo-text-2* or *partial-word-2* is placed into the source text as a result of text replacement.

- Lines that contain *CONTROL (*CBL), EJECT, SKIP1, SKIP2, SKIP3, or TITLE statements can appear in the source text. Such lines are copied into the resultant source text unchanged.
- The following rules apply to debugging lines:
  - Debugging lines are permitted in pseudo-text or partial-words. Text words within a debugging line participate in the matching rules as if the letter "D" did not appear in the indicator area.
  - When a REPLACE statement is specified on a debugging line, the statement is treated as if the letter "D" did not appear in the indicator area.
  - After all COPY and REPLACE statements are processed, a debugging line is considered to have all the characteristics of a comment line if the WITH DEBUGGING MODE clause is not specified in the SOURCE-COMPUTER paragraph.
- Except for COPY and REPLACE statements, the syntactic correctness of the source text cannot be determined until all COPY and REPLACE statements are completely processed.
- (This rule only applies to pseudo-text.) If the source text has occurrences of a dummy operand `:TAG:` that is delimited by colons in the program text, the compiler replaces the dummy operand with the required text. The colons serve as separators and make TAG a stand-alone operand.

  For example, you can use the REPLACE statement in the DATA DIVISION of a program as follows:

```
REPLACE ==:TAG:== BY ==Payroll==.

01  :TAG:.
  02  :TAG:-WEEK          PIC S99.
  02  :TAG:-GROSS-PAY     PIC S9(5)V99.
  02  :TAG:-HOURS         PIC S999  OCCURS 1 TO 52 TIMES
      DEPENDING ON :TAG:-WEEK OF :TAG:.
```

- The REPLACE statement can be used to replace parts of words, either by using the `LEADING | TRAILING` *partial-word-1* `BY` *partial-word-2* phrase, or by using the pseudo-text `:TAG:` method.

SERVICE LABEL statement

The SERVICE LABEL statement is syntax checked, but has no effect on the execution of the program.

Format

```
►►─ SERVICE LABEL ─►◄
```

The SERVICE LABEL statement can appear only in the PROCEDURE DIVISION, but not in the declaratives section.

SERVICE RELOAD statement

The SERVICE RELOAD statement is syntax checked, but has no effect on the execution of the program.

Format

```
►►─ SERVICE RELOAD ── identifier-1 ─►◄
```

SKIP statements

The SKIP1, SKIP2, and SKIP3 statements specify blank lines that the compiler should add when printing the source listing. SKIP statements have no effect on the compilation of the source text itself.

Format

```
►► ┬─ SKIP1 ─┬──┬──────┬──►◄
   ├─ SKIP2 ─┤  └─ . ─┘
   └─ SKIP3 ─┘
```

SKIP1
Specifies a single blank line to be inserted in the source listing.

SKIP2
Specifies two blank lines to be inserted in the source listing.

SKIP3
Specifies three blank lines to be inserted in the source listing.

SKIP1, SKIP2, or SKIP3 can be written anywhere in either Area A or Area B, and can be terminated with a separator period. It must be the only statement on the line.

The SKIP statements must be embedded in a program source. For example, in the case of batch applications, a SKIP1, SKIP2, or SKIP3 statement must be placed between the PROCESS (CBL) statement and the end of the program (or END PROGRAM marker, if specified)..

TITLE statement

The TITLE statement specifies a title to be printed at the top of each page of the source listing produced during compilation.

If no TITLE statement is found, a title containing the identification of the compiler and the current release level is generated. The title is left-justified on the title line.

Format

```
►► TITLE ── literal ──┬──────┬──►◄
                      └─ . ─┘
```

literal
Must be an alphanumeric literal, DBCS literal, or national literal and can be followed by a separator period.

Must not be a figurative constant.

In addition to the default or chosen title, the right side of the title line contains the following items:

- For programs, the name of the program from the PROGRAM-ID paragraph for the outermost program. (This space is blank on pages preceding the PROGRAM-ID paragraph for the outermost program.)
- For classes, the name of the class from the CLASS-ID paragraph.
- Current page number.
- Date and time of compilation.

The TITLE statement:

- Forces a new page immediately, if the SOURCE compiler option is in effect
- Is not itself printed on the source listing
- Has no other effect on compilation

- Has no effect on program execution
- Cannot be continued on another line
- Can appear anywhere in any of the divisions

A title line is produced for each page in the listing produced by the LIST option. This title line uses the last TITLE statement found in the source statements or the default.

The word TITLE can begin in either Area A or Area B.

The TITLE statement must be embedded in a class or program source. For example, in the case of batch applications, the TITLE statement must be placed between the PROCESS (CBL) statement and the end of the program (or the END PROGRAM marker, if specified).

No other statement can appear on the same line as the TITLE statement.

USE statement

The USE statement defines the conditions under which the procedures that follow the statement will be executed.

The formats for the USE statement are:

- EXCEPTION/ERROR declarative
- DEBUGGING declarative

For general information about declaratives, see "Declaratives" on page 234.

EXCEPTION/ERROR declarative

The EXCEPTION/ERROR declarative specifies procedures for input/output exception or error handling that are to be executed in addition to the standard system procedures.

The words EXCEPTION and ERROR are synonymous and can be used interchangeably.

Format 1: USE statement for EXCEPTION/ERROR declarative

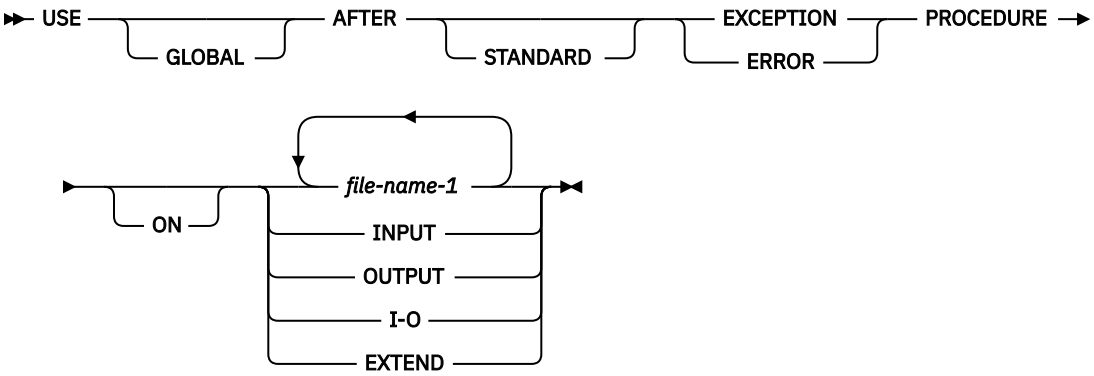

file-name-1

Valid for all files. When this option is specified, the procedure is executed only for the files named. No file-name can refer to a sort or merge file. For any given file, only one EXCEPTION/ERROR procedure can be specified; thus, file-name specification must not cause simultaneous requests for execution of more than one EXCEPTION/ERROR procedure.

A USE AFTER EXCEPTION/ERROR declarative statement specifying the name of a file takes precedence over a declarative statement specifying the open mode of the file.

INPUT

Valid for all files. When this option is specified, the procedure is executed for all files opened in INPUT mode or in the process of being opened in INPUT mode that get an error.

OUTPUT
Valid for all files. When this option is specified, the procedure is executed for all files opened in OUTPUT mode or in the process of being opened in OUTPUT mode that get an error.

I-O
Valid for all direct-access files. When this option is specified, the procedure is executed for all files opened in I-O mode or in the process of being opened in I-O mode that get an error.

EXTEND
Valid for all files. When this option is specified, the procedure is executed for all files opened in EXTEND mode or in the process of being opened in EXTEND mode that get an error.

The EXCEPTION/ERROR procedure is executed:

- Either after completing the system-defined input/output error routine, or
- Upon recognition of an INVALID KEY or AT END condition when an INVALID KEY or AT END phrase has not been specified in the input/output statement, or
- Upon recognition of an IBM-defined condition that causes file status key 1 to be set to 9. (See "File status key" on page 272.)

After execution of the EXCEPTION/ERROR procedure, control is returned to the invoking routine in the input/output control system. If the input/output status value does not indicate a critical input/output error, the input/output control system returns control to the next executable statement following the input/output statement whose execution caused the exception.

An applicable EXCEPTION/ERROR procedure is activated when an input/output error occurs during execution of a READ, WRITE, REWRITE, START, OPEN, CLOSE, or DELETE statement. To determine what conditions are errors, see "Common processing facilities" on page 272.

A declarative procedure must not reference a nondeclarative procedure.

A PERFORM statement in a nondeclarative procedure can reference a declarative procedure; otherwise, a declarative procedure must not be referenced from a nondeclarative procedure.

You can include a statement that executes a previously called USE procedure that is still in control. However, to avoid an infinite loop, you must be sure that there is an eventual exit at the bottom.

EXCEPTION/ERROR procedures can be used to check the file status key values whenever an input/output error occurs.

Precedence rules for nested programs

Special precedence rules are followed when programs are contained within other programs.

In applying these rules, only the first qualifying declarative is selected for execution. The order of precedence for selecting a declarative is:

1. A file-specific declarative (that is, a declarative of the form USE AFTER ERROR ON *file-name-1*) within the program that contains the statement that caused the qualifying condition.
2. A mode-specific declarative (that is, a declarative of the form USE AFTER ERROR ON INPUT) within the program that contains the statement that caused the qualifying condition.
3. A file-specific declarative that specifies the GLOBAL phrase and is within the program directly containing the program that was last examined for a qualifying declarative.
4. A mode-specific declarative that specifies the GLOBAL phrase and is within the program directly containing the program that was last examined for a qualifying condition.

Steps 3 and 4 are repeated until the last examined program is the outermost program, or until a qualifying declarative has been found.

DEBUGGING declarative

Debugging sections are permitted only in the outermost program; they are not valid in nested programs. Debugging sections are never triggered by procedures contained in nested programs.

Debugging sections are not permitted in:

- A program defined with the recursive attribute

The WITH DEBUGGING MODE clause of the SOURCE-COMPUTER paragraph activates all debugging sections and lines that have been compiled into the object code. See "Source language debugging" on page 617 for additional details.

When the debugging mode is suppressed by not specifying the WITH DEBUGGING MODE clause, all USE FOR DEBUGGING declarative procedures and all debugging lines are inhibited.

Automatic execution of a debugging section is not caused by a statement that appears in a debugging section.

Format 2: USE statement for DEBUGGING declarative

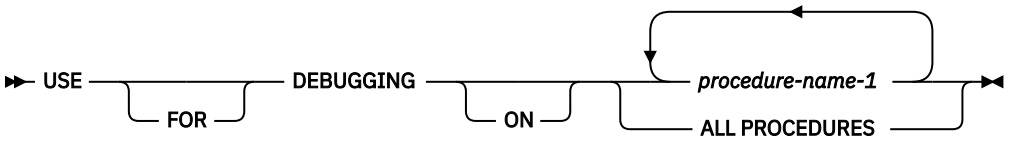

USE FOR DEBUGGING

All debugging statements must be written together in a section immediately after the DECLARATIVES header.

Except for the USE FOR DEBUGGING sentence itself, within the debugging procedure there must be no reference to any nondeclarative procedures.

procedure-name-1

Must not be defined in a debugging session.

Table 60 on page 583 shows, for each valid option, the points during execution when the USE FOR DEBUGGING procedures are executed.

Any given procedure-name can appear in only one USE FOR DEBUGGING sentence, and only once in that sentence. All procedures must appear in the outermost program.

ALL PROCEDURES

procedure-name-1 must not be specified in any USE FOR DEBUGGING sentences. The ALL PROCEDURES phrase can be specified only once in a program. Only the procedures contained in the outermost program will trigger execution of the debugging section.

Table 60. Execution of debugging declaratives

USE FOR DEBUGGING operand	Upon execution of the following, the USE FOR DEBUGGING procedures are executed immediately
procedure-name-1	Before each execution of the named procedure After the execution of an ALTER statement referring to the named procedure
ALL PROCEDURES	Before each execution of each nondebugging procedure in the outermost program After the execution of each ALTER statement in the outermost program (except ALTER statements in declarative procedures)

Chapter 84. Compiler directives

A *compiler directive* is a statement that causes the compiler to take a specific action during compilation.

CALLINTERFACE

The CALLINTERFACE directive specifies the interface convention for CALL statements. The convention specified stays in effect until another CALLINTERFACE directive is encountered in the source.

Format

```
►►─┬─ >>CALLINTERFACE ─┬─┬─ SYSTEM ─┬─┬─ DESC ──────────────┬─►◄
   └─ >>CALLINT ───────┘ └──────────┘ ├─ DESCRIPTOR ─────────┤
                                     ├─ NODESC ──────────────┤
                                     └─ NODESCRIPTOR ────────┘
```

SYSTEM
Specifies that the call interface convention is the standard system linkage convention of the platform.

DESC, DESCRIPTOR
Indicates that an argument descriptor is passed for each argument on a CALL statement.

NODESC, NODESCRIPTOR
Indicates that no argument descriptors are passed for any arguments on a CALL statement. NODESC/NODESCRIPTOR is the default.

Specify >>CALLINTERFACE only in the procedure division.

The positions of CALL statements relative to the CALLINTERFACE directive are recognized following any processing of COPY and REPLACE statements. For example, CALL statements and CALLINTERFACE directives in COPY text are processed by the rules specified for the CALLINTERFACE directive.

If you specify syntax in the CALLINTERFACE directive that is not supported, the entire CALLINTERFACE directive is ignored.

Syntax and general rules

- You must specify >>CALLINTERFACE on a line by itself, in Area B.
- You cannot specify >>CALLINTERFACE:
  - Within a COPY or REPLACE statement
  - Between the lines of a continued character string
  - In the middle of a COBOL statement
- The >>CALLINTERFACE specification is limited to the current compilation unit.
- The REPLACE statement and REPLACING phrase of the COPY statement do not affect the CALLINTERFACE directive.

JAVA-CALLABLE Directive

Use the JAVA-CALLABLE directive to make a COBOL program callable from Java™.

When you compile a COBOL program with the JAVA-CALLABLE directive, the compiler generates a COBOL Native Stub. This stub acts as an interface between the Java caller and the COBOL program. It receives control from Java, converts incoming arguments to their COBOL format, and then statically calls

© Copyright IBM Corp. 2021, 2025

the COBOL program. If the COBOL program returns a value, the stub converts it to the appropriate Java format before returning control.

The compiler also generates a Java Native Stub, which declares a Java native method with the correct parameter and return type signature. This stub loads the COBOL Native Stub shared library. To call the COBOL program from Java, import the Java Native Stub and invoke the generated method.

Format

```
>>JAVA-CALLABLE
```

General rules

Use the `JAVA-CALLABLE` directive before the `PROCEDURE DIVISION` header. Specify the directive on a new line, either in Area A or Area B, and make sure that the entire directive appears on that line.
The compiler generates the COBOL Native Stub file by using the following naming format, where COBOL-source-name is the name of the source file containing the COBOL program.

```
<COBOL-source-name>IGYJ.cbl
```

Handling parameters and returned values

- If a COBOL program that includes the `JAVA-CALLABLE` directive defines parameters by using the `USING` phrase in the `PROCEDURE DIVISION` header, the compiler generates a COBOL Native Stub that handles the conversion between Java arguments and the corresponding COBOL parameter types. Based on the data definitions of the COBOL parameters, the compiler assumes that the incoming Java arguments follow the COBOL/Java type mapping and generates the necessary conversion code. For mapping details, see Mapping between COBOL and Java data types for interoperability.

  Note: If a parameter is defined as a fixed-length table, and the number of elements in the incoming Java array does not match the number specified in the OCCURS clause of the corresponding COBOL parameter, the program returns a runtime error. For mapping details, see Mapping between COBOL and Java data types for interoperability.
- If a COBOL program that includes the `JAVA-CALLABLE` directive defines parameters by using the `RETURNING` phrase in its `PROCEDURE DIVISION` header, the COBOL Native Stub converts the returned COBOL value to the corresponding Java value and returns it to the Java caller. For mapping details, see Mapping between COBOL and Java data types for interoperability.
- When a Java program calls a COBOL program compiled with the `JAVA-CALLABLE` directive, the Java Native Stub uses a method signature generated by the COBOL compiler. This signature is based on the COBOL programs definition, including its parameters and any return value. With the signature, the Java program can perform compile-time checking to ensure that only arguments of the appropriate Java type can be passed to the COBOL program.

Data access properties

Some data types are treated as read-only, while others are treated as read/write when passed as parameters in the following cases:

- In a COBOL-Java interoperable application, the compiler treats a COBOL parameter that corresponds to a primitive Java type such as `byte`, `short`, `int`, `long`, `float`, `double`, or `boolean`) as read-only. If the COBOL program modifies the value of such a parameter, the change is not reflected in the Java caller. This also applies to COBOL parameters that correspond to immutable Java classes, such as `java.lang.String` and `java.math.BigDecimal`.
- When a COBOL parameter is passed `BY REFERENCE` and corresponds to a single-dimensional array of a primitive Java type such as `byte[]`, `short[]`, `int[]`, `long[]`, `float[]`, `double[]`, or `boolean[]` any modifications made by the COBOL program are reflected in the Java caller. This behavior is consistent with how arrays of primitive types behave when used as parameters in a pure Java application.

- When a COBOL parameter is an alphanumeric group item, any changes made by the COBOL program are reflected in the Java caller.

Building COBOL Native Stub Programs

The cob2 compiler compiles the COBOL Native Stub file into a dynamic shared library in the current working directory. This native method shared object (DSO) is loaded into the JVM at runtime when a Java program calls the COBOL program. By default, the library is named lib<COBOL-source-name>IGYJ.so. The Java Native Stub loads this shared library, so you only need to import the stub to access the COBOL Native Stub program. You can change the name of the generated library by using the -o option with cob2. See -o flag option for more details.

For Java-callable programs, ensure that the CLASSPATH environment variable includes the ibm.jlinux.jar file. This file enables the conversion of group, packed, and zoned variables to their corresponding Java types. You can find the JAR file in the following directory: /opt/ibm/cobol/rte/usr/share/javaiop/.

Invoking COBOL programs from Java

COBOL programs containing the JAVA-CALLABLE directive are considered to be native methods in the Java Native Stub. The stub class is named <COBOL-source-name> and belongs to the default package com.ibm.cobol.javaiop. See JAVAPKG page on specifying the package name.

The native method is the capitalized version of the PROGRAM-ID of the callable program unless the PGMNAME(MIXED) option is specified, in this case the PROGRAM-ID is used without modification.

For example, if a COBOL program named “cobprog1.cbl” with a PROGRAM-ID of “COBID” contains the JAVA-CALLABLE directive and the native method DSO for the associated application is compiled using the default package name, then cobprog1 can be invoked in Java as a COBOL native method as follows:

```
import com.ibm.cobol.javaiop.*;

...

Cobprog1.COBID(...);
```

- If you do not specify a literal name for a Java-callable COBOL program in the IDENTIFICATION DIVISION, the corresponding COBOL native method name in Java defaults to the uppercase version of the program name.
- If you specify a literal name for a Java-callable COBOL program in the IDENTIFICATION DIVISION and compile with PGMNAME(MIXED), the corresponding COBOL native method name in Java matches the literal.

Conditional compilation

Conditional compilation provides a way of including or omitting selected lines of source code depending on the values of literals specified by the DEFINE directive. In this way, you can create multiple variants of the same program without the need to maintain separate source streams.

The compiler directives that are used for conditional compilation are the DEFINE directive, the EVALUATE directive, and the IF directive. The DEFINE directive is used to define compilation variables that are referenced in the EVALUATE and IF directives to select lines of source code that are to be included or omitted in a compilation group.

Conditional compilation directives are processed according to the following rules:

- Within a source file, if a conditional compilation directive appears before a COPY or REPLACE statement, it is processed before the COPY or REPLACE statement is processed. This means that conditional compilation directives may be used to exclude COPY and REPLACE statements from a program.
- Conditional compilation directives are not affected by substitutions made as the result of REPLACE statements or the REPLACING phrase of COPY statements.

- Conditional compilation directives may appear in copybooks.

Note: Conditional compilation directives can be included in a file that contains the BASIS statement, but in that file, conditional compilation directives do not control the inclusion or exclusion of source from that file. Instead, the conditional compilation directives will be processed like any other source lines in the BASIS file that are not INSERT or DELETE statements, and those directives will be passed through to the source that is being assembled to be processed later during the library phase.

Related references
"DEFINE" on page 588
"EVALUATE" on page 589
"IF" on page 591
Example: conditional compilation output (*COBOL for Linux on x86 Programming Guide*)

DEFINE

The DEFINE directive defines or undefines a compilation variable. The compilation variables can be used within any of the conditional compilation directives (DEFINE, EVALUATE, and IF). The compilation variable is treated as a symbolic reference to the literal value it currently represents.

Format

```
►► >>DEFINE ── compilation-variable-name-1 ──┬──────┬──►
                                             └─ AS ─┘

►──┬──────────────────────────────────────────────────────►◄
   │   ┌─ arith-expr-1 ─┐   ┌──────────────┐
   │   ├─ literal-1 ────┤   └─ OVERRIDE ───┘
   │   └─ PARAMETER ────┘
   └──────────────────────── OFF ──────────────────────────
```

>>DEFINE
Must begin on a new line in area A or B and must be specified entirely on that line.

compilation-variable-name-1
Must not be the same as a conditional compiler directive keyword and must not be one of the predefined compilation variable names.

If a DEFINE directive does not specify the OFF or the OVERRIDE phrase, then one of the following conditions must be true:

- *compilation-variable-name-1* was not declared previously within the same compilation group.
- The previous DEFINE directive referring to *compilation-variable-name-1* must have been specified with the OFF phrase.
- The previous DEFINE directive referring to *compilation-variable-name-1* must have specified the same value.

literal-1
Must be one of the following items:

- An alphanumeric literal, which can be specified as a regular alphanumeric literal ('abcd') or as a hex literal (x'F1F2F3'). National literals, DBCS literals, and null-terminated alphanumeric literals (Z literals) are not supported.
- An integer literal.
- A boolean literal (only B'0' and B'1' are supported).

arith-expr-1
Must be formed in accordance with the arithmetic expression rules as described in "Compile-time arithmetic expressions" on page 595.

General rules

- DEFINE directives that appear in code that is omitted as the result of other conditional compilation directives are not processed.
- In the text that follows a DEFINE directive that defines *compilation-variable-name-1* and does not include the OFF phrase, *compilation-variable-name-1* can be used in a conditional compilation directive wherever a literal of the category associated with the name is permitted, including in a defined condition and a boolean condition.
- In the text that follows a DEFINE directive specifying *compilation-variable-name-1* with the OFF phrase, *compilation-variable-name-1* can be used only in a defined condition, unless *compilation-variable-name-1* is redefined in a subsequent DEFINE directive without the OFF phrase.
- If the OVERRIDE phrase is specified, *compilation-variable-name-1* is unconditionally set to reference the value of the specified operand.
- If the AS PARAMETER phrase is specified, the value referenced by *compilation-variable-name-1* is obtained from a DEFINE option for *compilation-variable-name-1*, if such an option exists. If there is no DEFINE option for *compilation-variable-name-1*, *compilation-variable-name-1* is not defined.
- If *arith-expr-1* is specified, *arith-expr-1* is evaluated according to "Compile-time arithmetic expressions" on page 595, and *compilation-variable-name-1* references the resultant value.
- If *literal-1* is specified, *compilation-variable-name-1* references *literal-1*.

Related references
"Defined conditions" on page 594
"Predefined compilation variables" on page 595
DEFINE (*COBOL for Linux on x86 Programming Guide*)

EVALUATE

The EVALUATE directive provides a multi-branch method of choosing the source lines to include in a compilation group.

Format 1

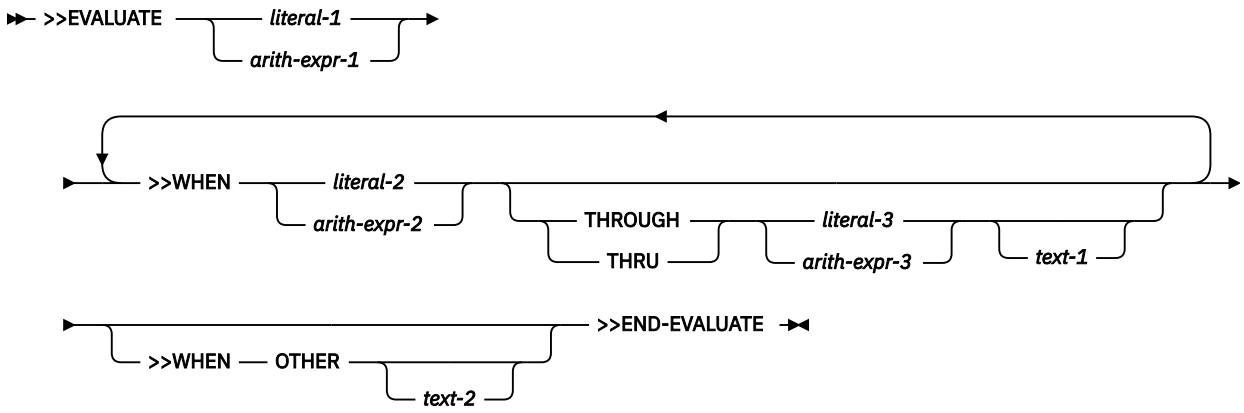

Format 2

```
▶▶ >>EVALUATE ── TRUE ──┬──────────────────────────────────────────┬──────────────────────────────────────────┬──────────────────────────────────────────
```

- *text-1* and *text-2* are not part of the EVALUATE compiler directive line. *text-1* and *text-2* that are in the first true branch of the EVALUATE statement are subject to the matching and replacing rules of the COPY statement and REPLACE statement.
- If the END-EVALUATE phrase is reached without any WHEN phrase evaluating to TRUE, or without encountering a WHEN OTHER phrase, all lines of *text-1* associated with all WHEN phrases are omitted from the resultant text.

Format 1:

- The selection subject is compared against the values specified in each WHEN phrase in turn as follows:
  - If the THROUGH phrase is not specified, a TRUE result is returned if the selection subject is equal to *operand-2*.
  - If the THROUGH phrase is specified, a TRUE result is returned if the selection subject is greater than or equal to *operand-2* and less than or equal to *operand-3*.
- If a WHEN phrase evaluates to TRUE, all the lines of *text-1* associated with that WHEN phrase are included in the resultant text. All lines of *text-1* associated with other WHEN phrases in that EVALUATE directive and all lines of *text-2* associated with a WHEN OTHER phrase are omitted from the resultant text.
- If no WHEN phrase evaluates to TRUE, all lines of *text-2* associated with the WHEN OTHER phrase, if specified, are included in the resultant text. All lines of *text-1* associated with the other WHEN phrases are omitted from the resultant text.
- If *literal-1* is an alphanumeric literal, a character-by-character comparison for equality based on the binary value of each character's encoding is used. If the literals are of unequal length, they are not equal.

Format 2:

- For each WHEN phrase in turn, the *constant-conditional-expression-1* is evaluated in accordance with the rules in "Constant conditional expressions" on page 593.
- If a WHEN phrase evaluates to TRUE, all lines of *text-1* associated with that WHEN phrase are included in the resultant text. All lines of *text-1* associated with other WHEN phrases of that EVALUATE directive and all lines of *text-2* associated with a WHEN OTHER phrase are omitted from the resultant text.
- If no WHEN phrase evaluates to TRUE, all lines of *text-2* associated with the WHEN OTHER phrase, if specified, are included in the resultant text. All lines of *text-1* associated with other WHEN phrases are omitted from the resultant text.

Related references

"COPY statement" on page 564
"REPLACE statement" on page 575

IF

The IF directive provides for a one-way or two-way conditional compilation.

Format

```
►► >>IF ── constant-conditional-expression-1 ──┬──────────┬──┬──────────┬──►
                                               └─ text-1 ─┘  └─ >>ELSE ─┬─┬─┘
                                                                        └─ text-2 ─┘

    ►── >>END-IF ──►◄
```

>>IF, >>ELSE, >>END-IF

Must begin on a new line in area A or B and must be specified entirely on that line.

constant-conditional-expression-1
Must be formed in accordance with the constant conditional expression rules as described in "Constant conditional expressions" on page 593.

text-1, text-2

Must begin on a new line and may consist of multiple lines.

May be any kind of source lines, including compiler directives. *text-1* or *text-2* may also include COPY statements.

The phrases of a given IF directive must be specified all in the same library text or all in source text. For purposes of this rule, *text-1* and *text-2* are not considered phrases of the IF directive. A nested IF directive specified in *text-1* or in *text-2* is considered a new IF directive.

General Rules

- *text-1* and *text-2* are not part of the IF compiler directive line. The text in the true branch of the IF directive (either *text-1* or *text-2*) is subject to the matching and replacing rules of the COPY statement and REPLACE statement.
- If *constant-conditional-expression-1* evaluates to TRUE, all lines of *text-1* are included in the resultant text and all lines of *text-2* are omitted from the resultant text.
- If *constant-conditional-expression-1* evaluates to FALSE, all lines of *text-2* are included in the resultant text and all lines of *text-1* are omitted from the resultant text.

Related references
"COPY statement" on page 564
"REPLACE statement" on page 575

Examples of conditional compilation

Example 1: import boolean compilation variable from outside the source and test it

Suppose that DEFINE(DEBUG) is in effect. In this case, DEBUG refers to a compilation variable of category boolean with a parameter value of B'1'.

```
>>DEFINE DEBUG AS PARAMETER
. . .
>>IF DEBUG IS DEFINED
     display "DEBUG: debugging mode is on"
>>END-IF
```

Example 2: import numeric variable value from outside the source and test it

Suppose that DEFINE(VAR1=10) is in effect:

```
>>DEFINE VAR1 AS PARAMETER
. . .
>>DEFINE VAR2 AS VAR1 + 2
. . .
>>IF VAR2 < 12
     compute x = x + 1 *> this code should NOT be included
>>ELSE
     compute x = x - 1 *> this code should be included
>>END-IF
```

Example 3: use the format 1 EVALUATE directive with numeric compilation variables

```
>>DEFINE VAR1 AS 6
>>DEFINE VAR2 AS 1
. . .
>>EVALUATE VAR1
>>WHEN VAR2 + 2
```

```
       compute x = x + 1 *> this code should NOT be included
>>WHEN 4 THRU 8
       compute x = x - 1 *> this code should be included
>>WHEN OTHER
       compute x = x * 2 *> this code should NOT be included
>>END-EVALUATE
```

Example 4: use the format 2 EVALUATE directive with alphanumeric compilation variables

```
>>DEFINE VAR1 AS 'MOO'
. . .
>>EVALUATE TRUE
>>WHEN VAR2 IS DEFINED
       compute x = x + 1 *> this code should NOT be included
>>WHEN VAR1 IS EQUAL TO 'GOO' OR VAR1 IS EQUAL TO 'MOO'
       compute x = x - 1 *> this code should be included
>>END-EVALUATE
```

Example 5: use OVERRIDE and OFF in the DEFINE directive

```
>>DEFINE VAR AS 12
. . .
>>DEFINE VAR OFF
. . .
>>IF VAR IS DEFINED
     compute x = x + 1 *> this code should NOT be included
>>ELSE
     compute x = x - 1 *> this code should be included
>>END-IF
. . .
>>DEFINE VAR AS 16
. . .
>>DEFINE VAR AS VAR - 2 OVERRIDE
. . .
>>IF VAR IS EQUAL TO 16
     compute x = x + 1 *> this code should NOT be included
>>ELSE
     compute x = x - 1 *> this code should be included
>>END-IF
```

Example 6: general use of boolean literals and compilation variables

```
>>DEFINE B1 B'1' *> B1 is category boolean
>>DEFINE B2 B'0' *> B2 is category boolean
. . .
>>IF B1 AND B2
     display “Both B1 and B2 are true” *> not included
>>ELSE
  >>IF B1
       display “Only B1 is true” *> included
  >>ELSE
    >>IF B2
         display “Only B2 is true” *> not included
    >>ELSE
         display “Neither B1 nor B2 is true” *> not included
    >>END-IF
  >>END-IF
>>END-IF
```

Constant conditional expressions

A constant conditional expression is an expression that is specified in conditional compilation directives and evaluated during the processing of those directives to determine the text that is included in the resultant program.

Note: In this topic, "literals" also include compilation variables, which means that you can use compilation variables in constant conditional expressions.

A constant conditional expression shall be one of the following items:

- A relation condition in which both operands are literals or arithmetic expressions that contain only literal terms. The condition shall follow the rules for relation conditions, with the following additions:
  - The operands shall be of the same category. An arithmetic expression is of the category numeric.
  - If literals are specified and they are not numeric literals, the relational operator shall be `"IS EQUAL TO"`, `"IS NOT EQUAL TO"`, `"IS ="`, `"IS NOT ="`, or `"IS <>"`.
- A defined condition.
- A boolean condition.
- A complex condition formed by combining the above forms of simple conditions into complex conditions by using AND, OR, and NOT. Abbreviated combined relation conditions shall not be specified.

Related references
"Relation conditions" on page 244
"Defined conditions" on page 594
"Abbreviated combined relation conditions" on page 260

Defined conditions

A defined condition expression tests whether a compilation variable is defined.

Format

```
►► compilation-variable-name-1 ──┬──────────┬──┬──────────┬── DEFINED ──►◄
                                 └─ IS ─────┘  └─ NOT ────┘
```

compilation-variable-name-1
Must not be the same as a conditional compiler directive keyword.

IS DEFINED
A defined condition that uses the IS DEFINED syntax evaluates to TRUE if the *compilation-variable-name-1* is defined.

If a defined condition references a compilation variable that was defined via a DEFINE compiler option, but preceding the defined condition in the program there is neither a corresponding DEFINE directive with the AS PARAMETER phrase nor a DEFINE directive without the OFF phrase for the compilation variable, then the defined condition for the compilation variable evaluates to FALSE.

IS NOT DEFINED
A defined condition that uses the IS NOT DEFINED syntax evaluates to TRUE if the *compilation-variable-name-1* is not defined.

A compilation variable whose most recent definition is via a DEFINE directive with the OFF phrase is considered to be not defined.

Related references
"Predefined compilation variables" on page 595
DEFINE (*COBOL for Linux on x86 Programming Guide*)

Boolean conditions

A boolean condition determines whether a boolean literal is true or false.

Format

```
►► ──┬──────────┬── boolean-literal-1 ──►◄
     └─ NOT ────┘
```

boolean-literal-1
Evaluates to true if it is B'1', and evaluates to false if it is B'0'.

The condition NOT *boolean-literal-1* evaluates to the reverse truth-value of *boolean-literal-1*.

Related references
DEFINE (*COBOL for Linux on x86 Programming Guide*)

Compile-time arithmetic expressions

You can specify a compile-time arithmetic expression in the DEFINE and EVALUATE directives and as part of a constant conditional expression, such as those found in IF directives or WHEN phrases of the EVALUATE directives.

Note: In this topic, "literals" also include compilation variables, which means that you can use compilation variables in compile-time arithmetic expressions.

A compile-time arithmetic expression follows the usual arithmetic expression rules, with the following exceptions:

- The exponentiation operator shall not be specified.
- All operands shall be integer numeric literals or arithmetic expressions in which all operands are integer numeric literals.
- The expression shall be specified in such a way that a division by zero does not occur.
- Intermediate results are computed according to the rules described in *Fixed-point data and intermediate results* in the *COBOL for Linux on x86 Programming Guide*. For that purpose, the integer operands of compile-time arithmetic expressions can be considered fixed-point numbers with 0 decimal digits. The ARITH(COMPAT|EXTEND|FULL) option setting is taken into account when deciding how many digits of precision to maintain for intermediate results.

Related references
“Arithmetic expressions” on page 235
ARITH (*COBOL for Linux on x86 Programming Guide*)

Predefined compilation variables

There are compilation variables that are defined automatically by the compiler. These compilation variables listed in this topic can be referenced in conditional compilation directives wherever a compilation variable is allowed.

Table 61. Predefined compilation variables

Predefined compilation variable name	Description	Value
IGY-ADDR	Indicates whether a 32-bit or 64-bit object program is generated.	32 if the -q32 or ADDR(32) option is in effect; 64 if the -q64 or ADDR(64) option is in effect.
IGY-BINARY	Indicates the endianness mode of binary data items (USAGE BINARY, USAGE COMP, and USAGE COMP-4).	The value of the BINARY option used to compile the program: • 0 represents BINARY(NATIVE) • 1 represents BINARY(BE) • 2 represents BINARY(LE)
IGY-CICS	Indicates whether embedded CICS statements are accepted.	B'1' if the CICS compiler option is in effect; B'0' otherwise.

Table 61. Predefined compilation variables (continued)		
Predefined compilation variable name	**Description**	**Value**
IGY-COMPILER-VRM	Indicates the version of the compiler.	An integer in the format VVRRMM, where: • VV represents the version number. • RR represents the release number. • MM represents the modification number. For example, compiler version 1.2.0 has an IGY-COMPILER-VRM value of 010200.
IGY-DYNAM	Indicates whether programs invoked through the CALL literal statement will be loaded or deleted dynamically at run time.	B'1' if the DYNAM compiler option is in effect; B'0' otherwise.
IGY-FLOAT	Indicates the representation for floating point data items (USAGE COMP-1 and USAGE COMP-2).	The value of the FLOAT option used to compile the program: • 0 represents FLOAT(NATIVE) • 1 represents FLOAT(BE) • 2 represents FLOAT(LE)
IGY-OPTIMIZE	Indicates the optimization level.	The optimization level that was used to compile the program: 0, 1, or 2. 0, 1, or 2 represents NOOPTIMIZE, OPTIMIZE(STD), and OPTIMIZE(FULL) respectively.
IGY-SQL	Indicates whether processing of embedded SQL statements is enabled.	B'1' if the SQL compiler option is in effect; B'0' otherwise.
IGY-UTF16	Indicates the endianness mode of national data items (USAGE NATIONAL).	The value of the UTF16 option used to compile the program: • 0 represents UTF16(NATIVE) • 1 represents UTF16(BE) • 2 represents UTF16(LE)

Related references
"DEFINE" on page 588
DEFINE (*COBOL for Linux on x86 Programming Guide*)

Appendix A. Appendixes

IBM extensions and COBOL standards

IBM extensions are features, syntax rules, or behaviors defined by IBM rather than by the COBOL standards. IBM extensions generally add features, syntax, or rules that are not specified in the ANSI and ISO COBOL standards. The term 85 COBOL Standard refers to those standards.

IBM extensions

The COBOL standards are listed in "Industry specifications" on page 637.

Table 62 on page 597 lists IBM extensions with a brief description. Standard behavior is shown in brackets, [ ], when the standard behavior is not obvious. Extensions are described in more detail throughout this document, but they are not further identified as extensions.

Many IBM extensions are distinguished from standard language by their syntax. For others, you use compiler options to choose between standard and extension behavior. Generally, the related compiler options are noted in the detailed rules. For information about compiler options, see *Compiler options* in the *COBOL for Linux on x86 Programming Guide*.

If an item is listed as an extension, all related rules are also extensions. For example, USAGE DISPLAY-1 for DBCS characters is listed as an extension; its many uses in statements and clauses are also extensions, but are not listed separately.

Table 62. ***IBM extension language elements***

Language area	Extension elements
COBOL words	User-defined words written in multibyte characters System-names written in multibyte characters User-defined words can include an underscore, but not as the first character.
National character support (Unicode support)	Support for UTF-16 with USAGE NATIONAL Allowance of UTF-8 with USAGE DISPLAY Usage NATIONAL for data categories national, national-edited, numeric, numeric-edited, external decimal, and external floating-point GROUP-USAGE clause with the NATIONAL phrase National literals (basic and hexadecimal) National character value for figurative constants SPACE, ZERO, QUOTE, HIGH-VALUES, LOW-VALUES, ALL literal Intrinsic functions for data conversion: • DISPLAY-OF • NATIONAL-OF Extended case mapping with UPPER-CASE and LOWER-CASE functions

© Copyright IBM Corp. 2021, 2025

*Table 62. **IBM extension language elements** (continued)*	
Language area	**Extension elements**
Implicit items	Special registers: • ADDRESS OF • LENGTH OF • RETURN-CODE • SHIFT-IN • SHIFT-OUT • SORT-CONTROL • SORT-CORE-SIZE • SORT-FILE-SIZE • SORT-MESSAGE • SORT-MODE-SIZE • SORT-RETURN • TALLY • WHEN-COMPILED • XML-CODE • XML-EVENT • XML-NTEXT • XML-TEXT
Figurative constants	Selection of apostrophe (') as the value of the figurative constant QUOTE NULL and NULLS for pointers and object references

*Table 62. **IBM extension language elements** (continued)*	
Language area	**Extension elements**
Literals	Use of apostrophe (') as an alternative to the quotation mark (") in opening and closing delimiters Mixed single-byte and multibyte characters in alphanumeric literals (mixed literals) Hexadecimal notation for alphanumeric literals, defined by opening delimiters X" and X' Null-terminated alphanumeric literals, defined by opening delimiters Z" and Z' DBCS literals, defined by opening delimiters N", N', G", and G'. N" and N' are defined as DBCS when the NSYMBOL(DBCS) compiler option is in effect. Consecutive alphanumeric literals (coding two consecutive alphanumeric literals by ending the first literal in column 72 of a continued line and starting the next literal with a quotation mark in the continuation line) National literals N", N', NX", NX' for storing literal content as national characters. N" and N' are defined as national when the NSYMBOL(NATIONAL) compiler option is in effect. 19- to 31-digit fixed-point numeric literals. [The 85 COBOL Standard specifies a maximum of 18 digits.] Floating-point numeric literals
Comments	Comment lines before the IDENTIFICATION DIVISION header Comment lines and comment entries containing multibyte characters Inline comments
Indexing and subscripting	Referencing a table with an index-name defined for a different table Specifying a positive signed integer literal following the operator + or - in relative subscripting
Millennium language extensions and date fields.	DATE FORMAT clause Windowed date fields, expanded date fields, year-last date fields, compatible date fields, date formats, and century window The following intrinsic functions: • DATEVAL • UNDATE • YEARWINDOW • DATE-TO-YYYYMMDD • DAY-TO-YYYYDDD • YEAR-TO-YYYY
Reference format	Extended source format

*Table 62. **IBM extension language elements** (continued)*	
Language area	**Extension elements**
IDENTIFICATION DIVISION for programs	Abbreviation ID for IDENTIFICATION RECURSIVE clause An optional separator period following PROGRAM-ID, AUTHOR, INSTALLATION, DATE-WRITTEN, and SECURITY paragraph headers. [The 85 COBOL Standard requires a period following each of these paragraph headers.] An optional separator period following program-name in the PROGRAM-ID paragraph. [The 85 COBOL Standard requires a period following program-name.] An alphanumeric literal for program-name in the PROGRAM-ID paragraph; the underscore can be the first character; program-name up to 160 characters in length. [The 85 COBOL Standard requires that program-name be specified as a user-defined word.]
End markers	Program-name in a literal. [The 85 COBOL Standard requires that program-name be specified as a user-defined word.]
SPECIAL-NAMES paragraph	The optional order of clauses. [The 85 COBOL Standard requires that the clauses be coded in the order presented in the syntax diagram.] Optionality of a period after the last clause when no clauses are coded. [The 85 COBOL Standard requires a period, even when no clauses are coded.] Multiple CURRENCY SIGN clauses. [The 85 COBOL Standard allows a single CURRENCY SIGN clause.] WITH PICTURE SYMBOL phrase in the CURRENCY SIGN clause Multiple-character and mixed-case currency signs in the CURRENCY SIGN clause (when the WITH PICTURE SYMBOL phrase is specified). [The 85 COBOL Standard allows only one character, and it is both the currency sign and the currency picture symbol. The standard currency sign must not be: • The same character as any standard picture symbol • A digit 0-9 • One of the special characters * + - , ; ( ) " = / • A space] Use of lower-case alphabetic characters as a currency sign. [The 85 COBOL Standard allows only uppercase characters.] Disallowance of the SYMBOLIC CHARACTERS clause, when a multibyte code page is indicated by the locale setting.

*Table 62. **IBM extension language elements** (continued)*	
Language area	**Extension elements**
INPUT-OUTPUT SECTION, FILE-CONTROL paragraph	Optionality of "FILE-CONTROL." when the INPUT-OUTPUT SECTION is specified, no file-control-paragraph is specified, and there are no files defined in the compilation unit. [The 85 COBOL Standard requires that "FILE-CONTROL." be coded if "INPUT-OUTPUT SECTION." is coded.] Optionality of the file-control-paragraph when the "FILE CONTROL." syntax is specified and there are no files defined in the compilation unit. [The 85 COBOL Standard requires that a file-control-paragraph be coded if "INPUT-OUTPUT SECTION." is coded.] USING phrase of the ASSIGN clause PASSWORD clause The second *data-name* in the FILE STATUS clause Optionality of RECORD in the ALTERNATE RECORD KEY clause. [The 85 COBOL Standard requires the word RECORD.] The lack of a RESERVE clause effect on execution A numeric, numeric-edited, alphanumeric-edited, alphabetic, internal floating-point, external floating-point, national, national-edited, or DBCS primary or alternate record key data item. [The 85 COBOL Standard requires that the key be alphanumeric.] A primary or alternate record key defined outside the minimum record size for indexed files containing variable-length records. [The 85 COBOL Standard requires that the primary and alternate record keys be within the minimum record size.] Sequential access to records in descending order. [The 85 COBOL Standard provides only ascending order of access.] A numeric data item of usage DISPLAY or NATIONAL in the FILE STATUS clause. [The 85 COBOL Standard requires an alphanumeric file status data item.] ORGANIZATION IS LINE SEQUENTIAL clause and line-sequential file control format National literal in the PADDING CHARACTER clause
INPUT-OUTPUT SECTION, I-O-CONTROL paragraph	APPLY WRITE-ONLY clause Specifying only one file-name in the SAME clause in the sequential, indexed, and sort-merge formats of the I-O-control entry. [The 85 COBOL Standard requires at least two file-names.] Optionality of the keyword ON in the RERUN clause. [The 85 COBOL Standard requires that ON be coded.] The line-sequential format I-O-control entry The RERUN clause in the sort-merge I-O-control entry

*Table 62. **IBM extension language elements** (continued)*	
Language area	**Extension elements**
DATA DIVISION	LOCAL-STORAGE SECTION The GLOBAL clause in the LINKAGE SECTION Specifying level numbers that are lower than other level numbers at the same hierarchical level in a data description entry. [The 85 COBOL Standard requires that all elementary or group items at the same level in the hierarchy be assigned identical level numbers.] Data categories internal floating-point, external floating-point, DBCS, national, and national-edited. Data category numeric with usage NATIONAL. Data category numeric-edited with usage NATIONAL.
FILE SECTION	*data-name* in the LABEL RECORDS clause, for specifying user labels RECORDING MODE clause Line-sequential format file description entry
Sort/merge file description entry	The following clauses: • BLOCK CONTAINS • LABEL RECORDS • VALUE OF • LINAGE • CODE-SET • WITH FOOTING • LINES AT
VALUE OF clause	The lack of VALUE clause effect on execution when specified under an SD
DATA RECORDS clause	Optionality of an 01 record description entry for a specified *data-name*. [The 85 COBOL Standard requires that an 01 record with the same *data-name* be specified.]
LINAGE clause	Specifying LINAGE for files opened in EXTEND mode
Data Description Entry	DATE-FORMAT clause
BLANK WHEN ZERO clause	Alternative spellings ZEROS and ZEROES for ZERO
GLOBAL clause	Specifying GLOBAL in the LINKAGE SECTION
INDEXED BY phrase	Nonunique unreferenced index names

*Table 62. **IBM extension language elements** (continued)*	
Language area	**Extension elements**
OCCURS clause	Omission of "*integer-1* TO" for variable-length tables Complex OCCURS DEPENDING ON. [The 85 COBOL Standard requires that an entry containing OCCURS DEPENDING ON be followed only by subordinate entries, and that no entry containing OCCURS DEPENDING ON be subordinate to an entry containing OCCURS DEPENDING ON.] Implicit qualification of a key specified without qualifiers when the key name is not unique Reference to a table through indexing when no INDEXED BY phrase is specified Keys of usages COMPUTATIONAL-1, COMPUTATIONAL-2, COMPUTATIONAL-3, COMPUTATIONAL-4, and COMPUTATIONAL-5 in the ASCENDING/DESCENDING KEY phrase Acceptance of nonunique index-names that are not referenced
PICTURE clause	A picture character-string containing 31 to 50 characters. [The 85 COBOL Standard allows a maximum of 30 characters.] Picture symbols G and N Picture symbol E and the external floating-point picture format Coding a trailing comma insertion character or trailing period insertion character immediately followed by a separator comma or separator semicolon in a PICTURE clause that is not the last clause of a data description entry. [The 85 COBOL Standard requires that a PICTURE clause containing a picture ending with a comma or period be the last clause in the entry and that it be followed immediately by a separator period.] Selecting a currency sign and currency symbol with the CURRENCY compiler option Case-sensitive currency symbols The maximum of 31 digits for numeric items of usages DISPLAY and PACKED-DECIMAL and for numeric-edited items of USAGE DISPLAY The effect of the TRUNC compiler option on the value of data items described with a usage of BINARY, COMPUTATIONAL, or COMPUTATIONAL-4
REDEFINES clause	Specifying REDEFINES of a redefined data item At a subordinate level, specifying a redefining data item that has a size greater than the size of the redefined data item
SYNCHRONIZED clause	Specifying SYNCHRONIZED for a level 01 entry

*Table 62. **IBM extension language elements** (continued)*	
Language area	**Extension elements**
USAGE clause	The following phrases: • NATIVE • COMP-1 and COMPUTATIONAL-1 • COMP-2 and COMPUTATIONAL-2 • COMP-3 and COMPUTATIONAL-3 • COMP-4 and COMPUTATIONAL-4 • COMP-5 and COMPUTATIONAL-5 • DISPLAY-1 • NATIONAL • POINTER • PROCEDURE-POINTER • FUNCTION-POINTER Use of the SYNCHRONIZED clause for items of usage INDEX
VALUE clause for condition-name entries	A VALUE clause in file and LINKAGE SECTION other than in condition-name entries A VALUE clause for a condition-name entry on a group that has usages other than DISPLAY Specifying the range of values in a THROUGH phrase using a locale-defined collating sequence VALUE IS NULL and VALUE IS NULLS
PROCEDURE DIVISION	Omission of a section-name Omission of a paragraph-name when a section-name is omitted Referencing data items in the LINKAGE SECTION without a USING phrase in the PROCEDURE DIVISION header (when those data-names are the operand of an ADDRESS OF phrase or ADDRESS OF special register) The following statements: • ENTRY • GOBACK • XML PARSE • XML GENERATE
PROCEDURE DIVISION header	The BY VALUE phrase The RETURNING phrase Specifying a data item in the USING phrase when the data item has a REDEFINES clause in its description Specifying multiple instances of a given data item in the USING phrase
Declarative Procedures	Executing an active declarative

*Table 62. **IBM extension language elements** (continued)*	
Language area	**Extension elements**
Procedures	Specifying *priority-number* as a positive signed numeric literal. [The 85 COBOL Standard requires an unsigned integer.] Omitting the section-header after the declaratives or when there are no declaratives. [The 85 COBOL Standard requires a section-header following the "DECLARATIVES." syntax and following the "END DECLARATIVES." syntax.] Omitting an initial *paragraph-name* if there are no declaratives. [The 85 COBOL Standard requires a paragraph-name in the following circumstances: • After the USE statement if there are statements in the declarative procedure • Following a section header outside declarative procedures • Before any procedural statement if there are no declaratives and the 85 COBOL Standard requires that procedural statements be within a paragraph.] Specifying paragraphs that are not contained within a section, even if some paragraphs are so contained. [The 85 COBOL Standard requires that paragraphs be within a section except when there are no declaratives. The 85 COBOL Standard requires that either all paragraphs be in sections or that none be.]
Conditional expressions	DBCS and KANJI class conditions Specifying data items of usage COMPUTATIONAL-3 or usage PACKED-DECIMAL in a NUMERIC class test
Relation condition	Enclosing an alphanumeric, DBCS, or national literal in parentheses The data-pointer format, the procedure-pointer, and the function-pointer format Comparison of an index-name with an arithmetic expression Use of parentheses within abbreviated combined relation conditions
CORRESPONDING phrase	Specifying an identifier that is subordinate to a filler item
INVALID KEY phrase	Omission of both the INVALID KEY phrase and an applicable EXCEPTION/ERROR procedure. [The 85 COBOL Standard requires at least one of them.]
ACCEPT statement	The *environment-name* operand of the FROM phrase The DATE YYYYMMDD phrase The DAY YYYYDDD phrase
ADD statement	A composite of operands greater than 18 digits

*Table 62. **IBM extension language elements** (continued)*	
Language area	**Extension elements**
CALL statement	The procedure-pointer and function-pointer operands for identifying the program to be called The following phrases and parameters: • ADDRESS OF • LENGTH OF • OMITTED • BY VALUE • RETURNING Specifying the called program-name in an alphabetic or zoned-decimal data item Specifying an argument defined as a subordinate group item. [The 85 COBOL Standard requires that arguments be an elementary data item or a group item defined with level 01.]
CANCEL statement	Specifying the name of the program to be canceled in an alphabetic or zoned-decimal data item The effect of the PGMNAME compiler option on the name of the program to be canceled
CLOSE statement	WITH NO REWIND phrase The line-sequential format
COMPUTE statement	The use of the word EQUAL in place of the equal sign (=)
DISPLAY statement	The *environment-name* operand of the UPON phrase Displaying signed numeric literals and noninteger numeric literals
DIVIDE statement	A composite of operands greater than 18 digits
EXIT statement	Specifying the EXIT statement in a sentence that has statements before or after the EXIT statement or in a paragraph that has other sentences. [The 85 COBOL Standard requires that the EXIT statement be specified in a sentence by itself and that the sentence be the only sentence in the paragraph.]
EXIT PROGRAM statement	Specifying EXIT PROGRAM before the last statement in a sequence of imperative statements. [The 85 COBOL Standard requires that the EXIT PROGRAM statement be specified as the last statement in a sequence of imperative statements.]
GO TO statement	Coding the unconditional format before the last statement in a sequence of imperative statements. [The 85 COBOL Standard requires that an unconditional GO TO be coded: • Only in a single-statement paragraph if no procedure-name is specified • Otherwise, as the last statement of a sentence.]
IF statement	The use of END-IF with the NEXT SENTENCE phrase. [The 85 COBOL Standard disallows use of END-IF with NEXT SENTENCE.]

*Table 62. **IBM extension language elements** (continued)*	
Language area	**Extension elements**
INITIALIZE statement	DBCS, EGCS, NATIONAL, and NATIONAL-EDITED in the REPLACING phrase Initializing a data item that contains the DEPENDING phrase of the OCCURS clause
MERGE statement	Specifying file-names in a SAME clause
MULTIPLY statement	A composite of operands greater than 18 digits
OPEN statement	The line-sequential format Specifying the EXTEND phrase for files that have a LINAGE clause
PERFORM statement	An empty in-line PERFORM statement A common exit for two or more active PERFORMS
READ statement	PREVIOUS phrase Omission of both the AT END phrase and an applicable declarative procedure Omission of both the INVALID KEY phrase and an applicable declarative procedure Read into an item that is neither an alphanumeric group item nor an elementary alphanumeric item
RETURN statement	Return into an item that is neither an alphanumeric group item nor an elementary alphanumeric item
REWRITE statement	Omission of both the INVALID KEY phrase and an applicable declarative procedure Rewriting a record with a different number of character positions than the number of character positions in the record being rewritten
SEARCH statement	Specifying END SEARCH with NEXT SENTENCE Omission of both the NEXT SENTENCE phrase and imperative statements in the binary search format
SET statement	The data-pointer format The procedure-pointer and function-pointer format
SORT statement	Specifying GIVING file-names in the SAME clause
START statement	Omission of both the INVALID KEY phrase and an applicable exception procedure Use of a key of a category other than alphanumeric The following relational operators: • LESS THAN • < • NOT GREATER THAN • NOT > • LESS THAN OR EQUAL TO • <=

*Table 62. **IBM extension language elements** (continued)*	
Language area	**Extension elements**
STOP statement	Specifying a noninteger fixed-point literal or a signed numeric integer or noninteger fixed-point literal Coding STOP as other than the last statement in a sentence
STRING statement	Reference modification of the data item specified in the INTO phrase
SUBTRACT statement	A composite of operands greater than 18 digits
UNSTRING statement	Reference modification of the sending field
WRITE statement	INVALID KEY and NOT ON INVALID KEY phrases The line-sequential format For a relative file, writing a different number of character positions than the number of character positions in the record being replaced Specifying both the ADVANCING PAGE and END-OF-PAGE phrases in a single WRITE statement For a relative or indexed file, omission of both the INVALID KEY phrase and an applicable exception procedure
Intrinsic functions	The effect of the DATEPROC and INTDATE compiler options on the INTEGER-OF-DATE and INTEGER-OF-DAY functions The following functions: • Chapter 24, “ADD-DURATION,” on page 441 • Chapter 29, “CONVERT-DATE-TIME,” on page 451 • Chapter 33, “DATE-TO-YYYYMMDD,” on page 459 • Chapter 34, “DATEVAL,” on page 461 • Chapter 36, “DAY-TO-YYYYDDD,” on page 465 • Chapter 37, “DISPLAY-OF,” on page 467 • Chapter 38, “EXTRACT-DATE-TIME,” on page 469 • Chapter 40, “FIND-DURATION,” on page 473 • Chapter 55, “NATIONAL-OF,” on page 503 • Chapter 69, “SUBTRACT-DURATION,” on page 531 • Chapter 72, “TEST-DATE-TIME,” on page 537 • Chapter 74, “TRIML,” on page 541 • Chapter 75, “TRIMR,” on page 543 • Chapter 76, “UNDATE,” on page 545 • Chapter 81, “YEAR-TO-YYYY,” on page 555 • Chapter 82, “YEARWINDOW,” on page 557
LENGTH function	Specifying a pointer, the ADDRESS OF special register, or the LENGTH OF special register as an argument to the function

Table 62. ***IBM extension language elements*** *(continued)*	
Language area	**Extension elements**
Compiler-directing statements	The following statements: • BASIS • PROCESS (CBL) • *CONTROL and *CBL • DELETE • EJECT • INSERT • READY or RESET TRACE • SERVICE LABEL • SERVICE RELOAD • SKIP1, SKIP2, and SKIP3 • TITLE
Compiler directives	CALLINTERFACE directive
COPY statement	The optionality of the syntax "OF *library-name*" for specifying a text-name qualifier Literals for specifying *text-name* and *library-name* SUPPRESS phrase Nested COPY statements Hyphen as the first or last character in the *word* form of REPLACING operands The use of any character (other than a COBOL separator) in the *word* form of REPLACING operands. [The 85 COBOL Standard accepts only the characters used in formation of user-defined words.]

COBOL standards

The COBOL standards, or 85 COBOL Standards are listed in "Industry specifications" on page 637. Extensions range from minor relaxation of rules to major capabilities, such as XML support, Unicode support, and DBCS character handling.

Obsolete language elements

Obsolete language elements are elements that are categorized as *obsolete* in the 85 COBOL Standard. Those elements are not part of the 2002 COBOL Standard.

This does *not* imply that IBM will remove the 85 COBOL Standard obsolete elements from a future release of COBOL for Linux.

The following language elements are categorized as obsolete by the 85 COBOL Standard:

- ALTER statement
- AUTHOR paragraph
- Comment entry
- DATA RECORDS clause

- DATE-COMPILED paragraph
- DATE-WRITTEN paragraph
- DEBUG-ITEM special register
- Debugging sections
- ENTER statement
- GO TO without a specified procedure-name
- INSTALLATION paragraph
- LABEL RECORDS clause
- MEMORY SIZE clause
- MULTIPLE FILE TAPE clause
- RERUN clause
- REVERSED phrase
- SECURITY paragraph
- Segmentation module
- STOP *literal* format of the STOP statement
- USE FOR DEBUGGING declarative
- VALUE OF clause
- The figurative constant ALL *literal* with a length greater than one, when the figurative constant is associated with a numeric or numeric-edited item

DBCS notation

Double-Byte Character Set (DBCS) strings in literals, comments, and user-defined words are delimited by shift-out and shift-in characters.

In this document, DBCS characters are shown in this form: D1D2D3. Latin alphabet characters in DBCS representation are shown in this form: .A.B.C.

Notes:

- In EBCDIC DBCS data containing mixed single-byte and double-byte characters, double-byte character strings are delimited by shift-out and shift-in characters. In this document, the shift-out delimiter is represented pictorially by the < character, and the shift-in character is represented pictorially by the > character. The single-byte EBCDIC codes for the shift-out and shift-in delimiters are X'0E' and X'0F', respectively. The <> symbol denotes contiguous shift-out and shift-in characters. The >< symbol denotes contiguous shift-in and shift-out characters.
- In ASCII DBCS data containing mixed single-byte and double-byte characters, double-byte character strings are not delimited by shift-out and shift-in characters.

EBCDIC and ASCII collating sequences

A collating sequence defines the order of characters within a coded character set or COBOL alphabet for purposes of sorting, merging, and comparing data and for processing files with indexed organization.

The ascending collating sequences for both the single-byte EBCDIC (Extended Binary Coded Decimal Interchange Code) and single-byte ASCII (American National Standard Code for Information Interchange) character sets are shown in this appendix. The collating sequence is defined by the ordinal number of characters in the character set, relative to 1.

The symbols and associated meanings shown for the EBCDIC collating sequence are those defined in the EBCDIC code page defined with CCSID 1140. Symbols and meanings can vary for other EBCDIC code pages, but the collating sequence is unchanged.

EBCDIC collating sequence

The EBCDIC collating sequence is the order in which characters are defined in EBCDIC.

The following table presents the collating sequence for single-byte EBCDIC code page 1140.

Ellipsis (...) indicates omission of a range of ordinal numbers between predecessor and successor ordinal numbers.

Table 63. ***EBCDIC collating sequence***

Ordinal number	Symbol	Meaning	Decimal representation	Hex representation
. . .				
65		Space	64	40
. . .				
75	¢	Cent sign	74	4A
76	.	Period, decimal point	75	4B
77	<	Less than sign	76	4C
78	(	Left parenthesis	77	4D
79	+	Plus sign	78	4E
80	|	Vertical bar, logical OR	79	4F
81	&	Ampersand	80	50
. . .				
91	!	Exclamation point	90	5A
92	$	Dollar sign	91	5B
93	*	Asterisk	92	5C
94	)	Right parenthesis	93	5D
95	;	Semicolon	94	5E
96	¬	Logical NOT	95	5F
97	-	Minus, hyphen	96	60
98	/	Slash	97	61
. . .				
108	,	Comma	107	6B
109	%	Percent sign	108	6C
110	_	Underscore	109	6D
111	>	Greater than sign	110	6E
112	?	Question mark	111	6F
. . .				
122	`	Grave accent	121	79
123	:	Colon	122	7A
124	#	Number sign, pound sign	123	7B

Table 63. ***EBCDIC collating sequence*** *(continued)*				
Ordinal number	**Symbol**	**Meaning**	**Decimal representation**	**Hex representation**
125	@	At sign	124	7C
126	'	Apostrophe, prime sign	125	7D
127	=	Equal sign	126	7E
128	"	Quotation marks	127	7F
. . .				
130	a		129	81
131	b		130	82
132	c		131	83
133	d		132	84
134	e		133	85
135	f		134	86
136	g		135	87
137	h		136	88
138	i		137	89
. . .				
146	j		145	91
147	k		146	92
148	l		147	93
149	m		148	94
150	n		149	95
151	o		150	96
152	p		151	97
153	q		152	98
154	r		153	99
. . .				
160	€	Euro currency sign	159	9F
. . .				
162	~	Tilde	161	A1
163	s		162	A2
164	t		163	A3
165	u		164	A4
166	v		165	A5
167	w		166	A6
168	x		167	A7

*Table 63. **EBCDIC collating sequence** (continued)*				
Ordinal number	**Symbol**	**Meaning**	**Decimal representation**	**Hex representation**
169	y		168	A8
170	z		169	A9
. . .				
177	^	Caret	176	B0
. . .				
188	[	Opening square bracket	187	BA
189	]	Closing square bracket	188	BB
. . .				
193	{	Opening brace	192	C0
194	A		193	C1
195	B		194	C2
196	C		195	C3
197	D		196	C4
198	E		197	C5
199	F		198	C6
200	G		199	C7
201	H		200	C8
202	I		201	C9
. . .				
209	}	Closing brace	208	D0
210	J		209	D1
211	K		210	D2
212	L		211	D3
213	M		212	D4
214	N		213	D5
215	O		214	D6
216	P		215	D7
217	Q		216	D8
218	R		217	D9
. . .				
225	\	Backslash	224	E0
. . .				
227	S		226	E2
228	T		227	E3

Table 63. ***EBCDIC collating sequence*** *(continued)*				
Ordinal number	**Symbol**	**Meaning**	**Decimal representation**	**Hex representation**
229	U		228	E4
230	V		229	E5
231	W		230	E6
232	X		231	E7
233	Y		232	E8
234	Z		233	E9
. . .				
241	0		240	F0
242	1		241	F1
243	2		242	F2
244	3		243	F3
245	4		244	F4
246	5		245	F5
247	6		246	F6
248	7		247	F7
249	8		248	F8
250	9		249	F9
. . .				

US English ASCII code page

The ASCII collating sequence is the order in which characters are defined in ASCII.

The following table presents the collating sequence for the US English ASCII code page. The collating sequence is the order in which characters are defined in ANSI INCITS 4, the 7-Bit American National Standard Code for Information Interchange (7-Bit ASCII), and in the International Reference Version of *ISO/IEC 646, 7-Bit Coded Character Set for Information Interchange*.

Ellipsis (. . .) indicates omission of a range of ordinal numbers between predecessor and successor ordinal numbers.

Table 64. ***ASCII collating sequence***				
Ordinal number	**Symbol**	**Meaning**	**Decimal representation**	**Hex representation**
1		Null	0	0
. . .				
33		Space	32	20
34	!	Exclamation point	33	21
35	"	Quotation mark	34	22

*Table 64. **ASCII collating sequence** (continued)*				
Ordinal number	**Symbol**	**Meaning**	**Decimal representation**	**Hex representation**
36	#	Number sign	35	23
37	$	Dollar sign	36	24
38	%	Percent sign	37	25
39	&	Ampersand	38	26
40	'	Apostrophe, prime sign	39	27
41	(	Opening parenthesis	40	28
42	)	Closing parenthesis	41	29
43	*	Asterisk	42	2A
44	+	Plus sign	43	2B
45	,	Comma	44	2C
46	-	Hyphen, minus	45	2D
47	.	Period, decimal point	46	2E
48	/	Slash, solidus	47	2F
49	0		48	30
50	1		49	31
51	2		50	32
52	3		51	33
53	4		52	34
54	5		53	35
55	6		54	36
56	7		55	37
57	8		56	38
58	9		57	39
59	:	Colon	58	3A
60	;	Semicolon	59	3B
61	<	Less than sign	60	3C
62	=	Equal sign	61	3D
63	>	Greater than sign	62	3E
64	?	Question mark	63	3F
65	@	Commercial At sign	64	40
66	A		65	41
67	B		66	42
68	C		67	43
69	D		68	44

Table 64. ***ASCII collating sequence*** *(continued)*				
Ordinal number	**Symbol**	**Meaning**	**Decimal representation**	**Hex representation**
70	E		69	45
71	F		70	46
72	G		71	47
73	H		72	48
74	I		73	49
75	J		74	4A
76	K		75	4B
77	L		76	4C
78	M		77	4D
79	N		78	4E
80	O		79	4F
81	P		80	50
82	Q		81	51
83	R		82	52
84	S		83	53
85	T		84	54
86	U		85	55
87	V		86	56
88	W		87	57
89	X		88	58
90	Y		89	59
91	Z		90	5A
92	[	Opening bracket	91	5B
93	\	Backslash, reverse solidus	92	5C
94	]	Closing bracket	93	5D
95	^	Caret	94	5E
96	_	Underscore	95	5F
97	`	Grave accent	96	60
98	a		97	61
99	b		98	62
100	c		99	63
101	d		100	64
102	e		101	65
103	f		102	66

*Table 64. **ASCII collating sequence** (continued)*				
Ordinal number	**Symbol**	**Meaning**	**Decimal representation**	**Hex representation**
104	g		103	67
105	h		104	68
106	i		105	69
107	j		106	6A
108	k		107	6B
109	l		108	6C
110	m		109	6D
111	n		110	6E
112	o		111	6F
113	p		112	70
114	q		113	71
115	r		114	72
116	s		115	73
117	t		116	74
118	u		117	75
119	v		118	76
120	w		119	77
121	x		120	78
122	y		121	79
123	z		122	7A
124	{	Opening brace	123	7B
125	|	Vertical bar	124	7C
126	}	Closing brace	125	7D
127	~	Tilde	126	7E

Source language debugging

Several COBOL language elements implement the debugging feature.

COBOL language elements are:

- Debugging lines
- Debugging sections
- DEBUG-ITEM special register
- Compile-time switch (WITH DEBUGGING MODE clause)
- Object-time switch

Debugging lines

A *debugging line* is a statement that is compiled only when the compile-time switch is activated. Debugging lines allow you, for example, to check the value of a data item at certain points in a procedure.

To specify a debugging line in your program, code a D in column 7 (the indicator area). You can include successive debugging lines, but each must have a D in column 7. You cannot break character-strings across two lines.

All your debugging lines must be written so that the program is syntactically correct, whether the debugging lines are compiled or treated as comments.

You can code debugging lines anywhere in your program after the OBJECT-COMPUTER paragraph.

A debugging line that contains only spaces in Area A and in Area B is treated as a blank line.

Debugging sections

Debugging sections are permitted only in the outermost program; they are not valid in nested programs. Debugging sections are never triggered by procedures contained in nested programs.

Debugging sections are declarative procedures. Declarative procedures are described under "USE statement" on page 581. A debugging section can be called, for example, by a PERFORM statement that causes repeated execution of a procedure. Any associated *procedure-name* debugging declarative section is executed once for each repetition.

A debugging section executes *only* if both the compile-time switch and the object-time switch are activated.

The debug feature recognizes each separate occurrence of an imperative statement *within* an imperative statement as the beginning of a separate statement.

You cannot refer to a procedure defined within a debugging section from a statement outside of the debugging section.

References to the DEBUG-ITEM special register can be made only from within a debugging declarative procedure.

DEBUG-ITEM special register

The DEBUG-ITEM special register provides information for a debugging declarative procedure about the conditions that cause debugging section execution.

For details of the DEBUG-ITEM special register, see "DEBUG-ITEM" on page 18.

Activate compile-time switch

The compile-time switch activates the debugging lines and sections. To place the compile-time switch in effect, specify WITH DEBUGGING MODE in the SOURCE COMPUTER paragraph of the configuration section.

Format

```
►► SOURCE-COMPUTER. ►
   ├──────────────────────────────────────────────────────────────────┤►◄
   └─ computer-name ──┬──────────────────────────────────────────┬─ . ─┘
                      │                                          │
                      │                   ┌─ DEBUGGING MODE ─┐   │
                      └─────────────────┬─┴──────────────────┴───┘
                                        └─ WITH ─────────────────┘
```

WITH DEBUGGING MODE

When WITH DEBUGGING MODE is specified, all debugging sections and debugging lines are compiled.

When WITH DEBUGGING MODE is omitted, all debugging sections and debugging lines are treated as comments.

Usage note: If you include a COPY statement as a debugging line, the letter "D" must appear on the first line of the COPY statement. The compiler treats the copied text as the debugging line or lines. The COPY statement is executed, regardless of whether WITH DEBUGGING MODE is specified or not.

Activate object-time switch

The object-time switch is set when the runtime option DEBUG or NODEBUG is specified. (NODEBUG is the default supplied by IBM.)

For details on the format, see *DEBUG* in the *COBOL for Linux on x86 Programming Guide*.

The USE FOR DEBUGGING declarative procedures are activated when DEBUG is in effect and inhibited when NODEBUG is in effect.

The debugging lines (lines with "D" or "d" in column 7) are not affected by the DEBUG or NODEBUG option; they are always active if they have been compiled.

When WITH DEBUGGING MODE is *not* specified in the SOURCE-COMPUTER paragraph, the object-time switch has no effect on execution of the object program.

You do not have to recompile the source unit to activate or deactivate the object-time switch.

Reserved words

A *reserved word* is a character-string with a predefined meaning in a COBOL source unit.

The following table identifies words that are reserved in COBOL for Linux and words that you should avoid because they might be reserved in a future release of COBOL for Linux.

- Words marked *X* under *Reserved* are reserved for function implemented in COBOL for Linux. If used as user-defined names, these words are flagged with an S-level message.
- Words marked *X* under *Standard only* are 85 COBOL Standard reserved words for function not implemented in COBOL for Linux. Use of these words as user-defined names is flagged with an S-level message.
- Words marked *X* under *Potential reserved words* are words that might be reserved in a future release of COBOL for Linux. IBM recommends that you not use these words as user-defined names. Use of these words as user-defined names is flagged with an I-level message.

  This column includes words reserved in the 2002 COBOL Standard.

Table 65. ***Reserved words***

Word	Reserved	Standard only	Potential reserved words
+ Arithmetic operator - unary plus or addition	X		
- Arithmetic operator - unary minus or subtraction	X		
* Arithmetic operator - multiplication	X		
/ Arithmetic operator - division	X		
** Arithmetic operator - exponentiation	X		
> Relational operator - greater than	X		

*Table 65. **Reserved words** (continued)*			
Word	**Reserved**	**Standard only**	**Potential reserved words**
< Relational operator - less than	X		
= Relational operator - equal and assignment operator in COMPUTE	X		
== Pseudo-text delimiter in COPY and REPLACE statements	X		
>= Relational operator - greater than or equal	X		
<= Relational operator - less than or equal	X		
<> Relational operator - not equal		X	
*> Comment indicator	X		
>> Compiler directive indicator		X	
ACCEPT	X		
ACCESS	X		
ACTIVE-CLASS			X
ADD	X		
ADDRESS	X		
ADVANCING	X		
AFTER	X		
ALIGNED			X
ALL	X		
ALLOCATE	X		
ALPHABET	X		
ALPHABETIC	X		
ALPHABETIC-LOWER	X		
ALPHABETIC-UPPER	X		
ALPHANUMERIC	X		
ALPHANUMERIC-EDITED	X		
ALSO	X		
ALTER	X		
ALTERNATE	X		
AND	X		
ANY	X		
ANYCASE			X
APPLY	X		
ARE	X		

*Table 65. **Reserved words** (continued)*			
Word	**Reserved**	**Standard only**	**Potential reserved words**
AREA	X		
AREAS	X		
ASCENDING	X		
ASSIGN	X		
AT	X		
AUTHOR	X		
B-AND			X
B-NOT			X
B-OR			X
B-XOR			X
BASED			X
BASIS	X		
BEFORE	X		
BEGINNING	X		
BINARY	X		
BINARY-CHAR			X
BINARY-DOUBLE			X
BINARY-LONG			X
BINARY-SHORT			X
BIT			X
BLANK	X		
BLOCK	X		
BOOLEAN	X		
BOTTOM	X		
BY	X		
CALL	X		
CANCEL	X		
CBL	X		
CD		X	
CF		X	
CH		X	
CHARACTER	X		
CHARACTERS	X		
CLASS			X

*Table 65. **Reserved words** (continued)*			
Word	**Reserved**	**Standard only**	**Potential reserved words**
CLASS-ID			X
CLOCK-UNITS		X	
CLOSE	X		
COBOL	X		
CODE	X		
CODE-SET	X		
COL			X
COLLATING	X		
COLS			X
COLUMN		X	
COLUMNS			X
COM-REG	X		
COMMA	X		
COMMON	X		
COMMUNICATION		X	
COMP	X		
COMP-1	X		
COMP-2	X		
COMP-3	X		
COMP-4	X		
COMP-5	X		
COMPUTATIONAL	X		
COMPUTATIONAL-1	X		
COMPUTATIONAL-2	X		
COMPUTATIONAL-3	X		
COMPUTATIONAL-4	X		
COMPUTATIONAL-5	X		
COMPUTE	X		
CONDITION			X
CONFIGURATION	X		
CONSTANT			X
CONTAINS	X		
CONTENT	X		
CONTINUE	X		

*Table 65. **Reserved words** (continued)*			
Word	**Reserved**	**Standard only**	**Potential reserved words**
CONTROL		X	
CONTROLS		X	
CONVERTING	X		
COPY	X		
CORR	X		
CORRESPONDING	X		
COUNT	X		
CRT			X
CURRENCY	X		
CURSOR			X
DATA	X		
DATA-POINTER			X
DATE	X		
DATE-COMPILED	X		
DATE-WRITTEN	X		
DAY	X		
DAY-OF-WEEK	X		
DBCS	X		
DE		X	
DEBUG-CONTENTS	X		
DEBUG-ITEM	X		
DEBUG-LINE	X		
DEBUG-NAME	X		
DEBUG-SUB-1	X		
DEBUG-SUB-2	X		
DEBUG-SUB-3	X		
DEBUGGING	X		
DECIMAL-POINT	X		
DECLARATIVES	X		
DEFAULT	X		
DELETE	X		
DELIMITED	X		
DELIMITER	X		
DEPENDING	X		

*Table 65. **Reserved words** (continued)*			
Word	**Reserved**	**Standard only**	**Potential reserved words**
DESCENDING	X		
DESTINATION		X	
DETAIL		X	
DISABLE		X	
DISPLAY	X		
DISPLAY-1	X		
DIVIDE	X		
DIVISION	X		
DOWN	X		
DUPLICATES	X		
DYNAMIC	X		
EC			X
EGCS	X		
EGI		X	
EJECT	X		
ELSE	X		
EMI		X	
ENABLE		X	
END	X		
END-ACCEPT			X
END-ACCEPT	X		
END-ADD	X		
END-CALL	X		
END-COMPUTE	X		
END-DELETE	X		
END-DISPLAY			X
END-DIVIDE	X		
END-EVALUATE	X		
END-EXEC	X		
END-IF	X		
END-INVOKE			X
END-JSON			X
END-MULTIPLY	X		
END-OF-PAGE	X		

*Table 65. **Reserved words** (continued)*			
Word	**Reserved**	**Standard only**	**Potential reserved words**
END-PERFORM	X		
END-READ	X		
END-RECEIVE		X	
END-RETURN	X		
END-REWRITE	X		
END-SEARCH	X		
END-START	X		
END-STRING	X		
END-SUBTRACT	X		
END-UNSTRING	X		
END-WRITE	X		
END-XML	X		
ENDING	X		
ENTER	X		
ENTRY	X		
ENVIRONMENT	X		
EO			X
EOP	X		
EQUAL	X		
ERROR	X		
ESI		X	
EVALUATE	X		
EVERY	X		
EXCEPTION	X		
EXCEPTION-OBJECT			X
EXEC	X		
EXECUTE	X		
EXIT	X		
EXTEND	X		
EXTERNAL	X		
FACTORY	X		
FALSE	X		
FD	X		
FILE	X		

*Table 65. **Reserved words** (continued)*			
Word	**Reserved**	**Standard only**	**Potential reserved words**
FILE-CONTROL	X		
FILLER	X		
FINAL		X	
FIRST	X		
FLOAT-EXTENDED			X
FLOAT-LONG			X
FLOAT-SHORT			X
FOOTING	X		
FOR	X		
FORMAT			X
FREE	X		
FROM	X		
FUNCTION	X		
FUNCTION-ID			X
FUNCTION-POINTER	X		
GENERATE	X		
GET			X
GIVING	X		
GLOBAL	X		
GO	X		
GOBACK	X		
GREATER	X		
GROUP		X	
GROUP-USAGE	X		
HEADING		X	
HIGH-VALUE	X		
HIGH-VALUES	X		
I-O	X		
I-O-CONTROL	X		
ID	X		
IDENTIFICATION	X		
IF	X		
IN	X		
INDEX	X		

*Table 65. **Reserved words** (continued)*			
Word	**Reserved**	**Standard only**	**Potential reserved words**
INDEXED	X		
INDICATE		X	
INHERITS	X		
INITIAL	X		
INITIALIZE	X		
INITIATE		X	
INPUT	X		
INPUT-OUTPUT	X		
INSERT	X		
INSPECT	X		
INSTALLATION	X		
INTERFACE			X
INTERFACE-ID			X
INTO	X		
INVALID	X		
INVOKE			X
IS	X		
JSON-CODE			X
JUST	X		
JUSTIFIED	X		
KANJI	X		
KEY	X		
LABEL	X		
LAST		X	
LEADING	X		
LEFT	X		
LENGTH	X		
LESS	X		
LIMIT		X	
LIMITS		X	
LINAGE	X		
LINAGE-COUNTER	X		
LINE	X		
LINE-COUNTER		X	

*Table 65. **Reserved words** (continued)*			
Word	**Reserved**	**Standard only**	**Potential reserved words**
LINES	X		
LINKAGE	X		
LOCAL-STORAGE	X		
LOCALE	X		
LOCK	X		
LOW-VALUE	X		
LOW-VALUES	X		
MEMORY	X		
MERGE	X		
MESSAGE		X	
METHOD			X
METHOD-ID			X
MINUS			X
MODE	X		
MODULES	X		
MORE-LABELS	X		
MOVE	X		
MULTIPLE	X		
MULTIPLY	X		
NATIONAL	X		
NATIONAL-EDITED	X		
NATIVE	X		
NEGATIVE	X		
NESTED			X
NEXT	X		
NO	X		
NOT	X		
NULL	X		
NULLS	X		
NUMBER		X	
NUMERIC	X		
NUMERIC-EDITED	X		
OBJECT			X
OBJECT-COMPUTER	X		

*Table 65. **Reserved words** (continued)*			
Word	**Reserved**	**Standard only**	**Potential reserved words**
OBJECT-REFERENCE			X
OCCURS	X		
OF	X		
OFF	X		
OMITTED	X		
ON	X		
OPEN	X		
OPTIONAL	X		
OPTIONS			X
OR	X		
ORDER	X		
ORGANIZATION	X		
OTHER	X		
OUTPUT	X		
OVERFLOW	X		
OVERRIDE	X		
PACKED-DECIMAL	X		
PADDING	X		
PAGE	X		
PAGE-COUNTER		X	
PASSWORD	X		
PERFORM	X		
PF		X	
PH		X	
PIC	X		
PICTURE	X		
PLUS		X	
POINTER	X		
POSITION	X		
POSITIVE	X		
PRESENT			X
PRINTING		X	
PROCEDURE	X		
PROCEDURE-POINTER	X		

*Table 65. **Reserved words** (continued)*			
Word	**Reserved**	**Standard only**	**Potential reserved words**
PROCEDURES	X		
PROCEED	X		
PROCESSING	X		
PROGRAM	X		
PROGRAM-ID	X		
PROGRAM-POINTER			X
PROPERTY			X
PROTOTYPE			X
PURGE		X	
QUEUE		X	
QUOTE	X		
QUOTES	X		
RAISE			X
RAISING			X
RANDOM	X		
RD		X	
READ	X		
READY	X		
RECEIVE		X	
RECORD	X		
RECORDING	X		
RECORDS	X		
RECURSIVE	X		
REDEFINES	X		
REEL	X		
REFERENCE	X		
REFERENCES	X		
RELATIVE	X		
RELEASE	X		
RELOAD	X		
REMAINDER	X		
REMOVAL	X		
RENAMES	X		
REPLACE	X		

*Table 65. **Reserved words** (continued)*			
Word	**Reserved**	**Standard only**	**Potential reserved words**
REPLACING	X		
REPORT		X	
REPORTING		X	
REPORTS		X	
REPOSITORY	X		
RERUN	X		
RESERVE	X		
RESET	X		
RESUME			X
RETRY			X
RETURN	X		
RETURN-CODE	X		
RETURNING	X		
REVERSED	X		
REWIND	X		
REWRITE	X		
RF		X	
RH		X	
RIGHT	X		
ROUNDED	X		
RUN	X		
SAME	X		
SCREEN		X	
SD	X		
SEARCH	X		
SECTION	X		
SECURITY	X		
SEGMENT		X	
SEGMENT-LIMIT	X		
SELECT	X		
SELF	X		
SEND		X	
SENTENCE	X		
SEPARATE	X		

*Table 65. **Reserved words** (continued)*			
Word	**Reserved**	**Standard only**	**Potential reserved words**
SEQUENCE	X		
SEQUENTIAL	X		
SERVICE	X		
SET	X		
SHARING			X
SHIFT-IN	X		
SHIFT-OUT	X		
SIGN	X		
SIZE	X		
SKIP1	X		
SKIP2	X		
SKIP3	X		
SORT	X		
SORT-CONTROL	X		
SORT-CORE-SIZE	X		
SORT-FILE-SIZE	X		
SORT-MERGE	X		
SORT-MESSAGE	X		
SORT-MODE-SIZE	X		
SORT-RETURN	X		
SOURCE		X	
SOURCE	X		
SOURCE-COMPUTER	X		
SOURCES			X
SPACE	X		
SPACES	X		
SPECIAL-NAMES	X		
SQL	X		
SQLIMS	X		
STANDARD	X		
STANDARD-1	X		
STANDARD-2	X		
START	X		
STATUS	X		

*Table 65. **Reserved words** (continued)*			
Word	**Reserved**	**Standard only**	**Potential reserved words**
STOP	X		
STRING	X		
SUB-QUEUE-1		X	
SUB-QUEUE-2		X	
SUB-QUEUE-3		X	
SUBTRACT	X		
SUM		X	
SUPER	X		
SUPPRESS	X		
SYMBOLIC	X		
SYNC	X		
SYNCHRONIZED	X		
SYSTEM-DEFAULT			X
TABLE		X	
TALLY	X		
TALLYING	X		
TAPE	X		
TERMINAL		X	
TERMINATE		X	
TEST	X		
TEXT		X	
THAN	X		
THEN	X		
THROUGH	X		
THRU	X		
TIME	X		
TIMES	X		
TITLE	X		
TO	X		
TOP	X		
TRACE	X		
TRAILING	X		
TRUE	X		
TYPE	X		

*Table 65. **Reserved words** (continued)*			
Word	**Reserved**	**Standard only**	**Potential reserved words**
TYPEDEF		X	
UNIT	X		
UNIVERSAL			X
UNLOCK		X	
UNSTRING	X		
UNTIL	X		
UP	X		
UPON	X		
USAGE	X		
USE	X		
USER-DEFAULT			X
USING	X		
VAL-STATUS			X
VALID			X
VALIDATE			X
VALIDATE-STATUS			X
VALUE	X		
VALUES	X		
VARYING	X		
WHEN	X		
WHEN-COMPILED	X		
WITH	X		
WORDS	X		
WORKING-STORAGE	X		
WRITE	X		
WRITE-ONLY	X		
XML	X		
XML-CODE	X		
XML-EVENT	X		
XML-NTEXT	X		
XML-SCHEMA	X		
XML-TEXT	X		
ZERO	X		
ZEROES	X		

Table 65. **Reserved words** (continued)			
Word	**Reserved**	**Standard only**	**Potential reserved words**
ZEROS	X		

Context-sensitive words

A context-sensitive word is a COBOL word that is reserved only in the general formats in which it is specified. If a context-sensitive word is used where the context-sensitive word is permitted in the general format, the word is treated as a keyword; otherwise it is treated as a user-defined word.

Table 66. Context-sensitive words	
Context-sensitive word	**Language construct or context**
CYCLE	EXIT statement
INITIALIZED	ALLOCATE statement
NAME	XML GENERATE statement
PARAGRAPH	EXIT statement
RECURSIVE	PROGRAM-ID paragraph
YYYYDDD	ACCEPT statement
YYYYMMDD	ACCEPT statement

Related references

"User-defined words" on page 12

"Reserved words" on page 619

Locale considerations

A *locale* is a collection of language-specific and culture-specific conventions for information processing. A locale makes information about language and culture available at run time so that the same program can display or process data differently for different countries or cultures.

For additional information about locales and the details of setting locales for specific languages and cultures, see *Setting the locale* in the *COBOL for Linux on x86 Programming Guide*.

Compile-time versus runtime locale

In general, the COBOL run time determines the locale in effect when the COBOL application is activated. However, the following processing is based on the locale in effect at compile time:

- Evaluation of user-defined names and literal values

  The compiler uses the code page indicated by the locale in effect at compile time to evaluate the source program. This includes the evaluation of user-defined names and literal values.

  When a literal value is associated with a data item such that code page conversion is required, the code page in effect at run time is used for the data item. For an item of class alphanumeric with native ASCII encoding, the code page indicated by the locale in effect at run time is used. For an item of class alphanumeric with EBCDIC encoding, the EBCDIC code page in effect at run time is used.
- Evaluation of collating sequences

  When the COLLSEQ(LOCALE) compiler option or the NCOLLSEQ(LOCALE) compiler option is in effect, the compile-time locale determines the following values:

- The range of characters specified by literals in a THRU phrase for the following language elements:
  - A condition-name VALUE clause
  - An EVALUATE statement
  - An ALPHABET clause in the SPECIAL-NAMES paragraph
  - A CLASS clause in the SPECIAL-NAMES paragraph
- The ordinal positions of characters specified in a SYMBOLIC CHARACTERS clause

The following sections describe the effects of locales on COBOL runtime processing.

Code pages

The runtime locale is used to determine:

- The code page for the encoding of alphanumeric and DBCS data items that have native (non-EBCDIC) encoding. The EBCDIC code page in effect is used when the CHAR(EBCDIC) compiler option is specified, the EBCDIC_CODEPAGE environment variable is not set, and the data item is described without the NATIVE phrase.
- Case mappings for the UPPER-CASE and LOWER-CASE intrinsic functions
- The output code page for the DISPLAY-OF intrinsic function when a codepage argument is omitted. The EBCDIC code page in effect is used when the CHAR(EBCDIC) compiler option is specified, the EBCDIC_CODEPAGE environment variable is not set, and the data item is described without the NATIVE phrase.
- The source code page for the NATIONAL-OF intrinsic function when a codepage argument is omitted. The EBCDIC code page in effect is used when the CHAR(EBCDIC) compiler option is specified, the EBCDIC_CODEPAGE environment variable is not set, and the data item is described without the NATIVE phrase.
- The code page for conversion of data for accepting into data items of usage NATIONAL with the ACCEPT statement
- The code page for conversion of data for displaying from data items of usage NATIONAL with the DISPLAY statement

Two runtime code pages can be in effect: one for native data (non-EBCDIC data) and one for host data (EBCDIC data). For information about how these runtime code pages are determined, see *Specifying the code page for character data* in the *COBOL for Linux on x86 Programming Guide*.

Collating sequences

In general, COBOL for Linux uses the collating sequence defined by the runtime locale when the COLLSEQ(LOCALE) compiler option or the NCOLLSEQ(LOCALE) compiler option is in effect. COLLSEQ(LOCALE) affects alphanumeric and DBCS data items; NCOLLSEQ(LOCALE) affects items described with USAGE NATIONAL.

When COLLSEQ(BINARY) or NCOLLSEQ(BINARY) is specified, a binary collating sequence is used.

In some cases, the language rules specify the use of a non-locale collating sequence regardless of the setting of the COLLSEQ or NCOLLSEQ compiler option. For example:

- A binary collating sequence is always used for indexed file keys.
- A collating sequence specified in the PROGRAM COLLATING SEQUENCE clause of the OBJECT-COMPUTER paragraph is used for alphanumeric comparisons.
- A collating sequence specified in the PROGRAM COLLATING SEQUENCE clause of the OBJECT-COMPUTER paragraph is used for SORT or MERGE statements with alphanumeric keys, unless the COLLATING SEQUENCE phrase is specified in the SORT or MERGE statement.
- A collating sequence specified in the COLLATING SEQUENCE phrase of a SORT or MERGE statement is used for alphabetic keys and alphanumeric keys.

Supported locales

COBOL for Linux supports locales for certain combinations of language, country, and code page. System environment variables identify the runtime locale in effect for specific locale categories. For details, see *Using environment variables to specify a locale* in the *COBOL for Linux on x86 Programming Guide*.

Industry specifications

COBOL for Linux supports various industry standards.

ISO COBOL standards

- ISO 1989:1985, *Programming languages - COBOL*

  ISO 1989:1985 is identical to ANSI INCITS 23-1985 (R2001), *Programming Languages - COBOL*
- ISO/IEC 1989/AMD1:1992, *Programming languages - COBOL: Intrinsic function module*

  ISO/IEC 1989/AMD1:1992 is identical to ANSI INCITS 23a-1989 (R2001), *Programming Languages - Intrinsic Function Module for COBOL*
- ISO/IEC 1989/AMD2:1994, *Programming languages - Correction and clarification amendment for COBOL*

  ISO/IEC 1989/AMD2:1994 is identical to ANSI INCITS 23b-1993 (R2001), *Programming Language - Correction Amendment for COBOL*

  All required modules are supported at the highest level defined by the standard.

  The following optional modules of the standard are supported:

  – Intrinsic Functions (1 ITR 0,1)
  – Debug (1 DEB 0,2)

  The following optional modules of the standard are not supported:

  – Report Writer
  – Communications
  – Debug (2 DEB 0,2)
  – Segmentation (2 SEG 0,2)
- ISO/IEC 1989:2002, *Information technology - Programming languages - COBOL* (partial support)

  ISO/IEC 1989:2002 is identical to ANSI INCITS 1989-2002 (R2013), *Information technology - Programming languages COBOL*
- ISO/IEC 1989:2014, *Information technology - Programming languages, their environments and system software interfaces - Programming language COBOL* (partial support)

  ISO/IEC 1989:2014 is identical to ANSI INCITS 1989-2014, *Information technology - Programming languages, their environments and system software interfaces - Programming language COBOL*

ANSI COBOL standards

- International Reference Version of *ISO/IEC 646, 7-Bit Coded Character Set for Information Interchange*
- The 7-bit coded character set defined in *American National Standard X3.4-1977, Code for Information Interchange*
- *SPIRIT (Service Provider's Requirements for Information Technology), Part 6—COBOL Language Profile*, published by Network Management Forum.
- *MIA (Multivendor Integration Architecture), technical requirements*, specified by Nippon Telegraph and Telephone Corp (NTT)

COBOL for Linux has the following restriction related to COBOL standards:

- When division by zero occurs in an arithmetic expression and an ON SIZE ERROR phrase is not specified, processing abnormally terminates.

See "Option settings for 85 COBOL Standard conformance" in the *COBOL for Linux on x86 Programming Guide* for specification of the compiler options and runtime options that are required to support the above standards.

Acknowledgment

Any organization interested in reproducing the COBOL standard and specifications in whole or in part, using ideas from this document as the basis for an instruction manual or for any other purpose, is free to do so. However, all such organizations are requested to reproduce the following acknowledgment paragraphs in their entirety as part of the preface to any such publication (any organization using a short passage from this document, such as in a book review, is requested to mention "COBOL" in acknowledgment of the source, but need not quote the acknowledgment): COBOL is an industry language and is not the property of any company or group of companies, or of any organization or group of organizations. No warranty, expressed or implied, is made by any contributor or by the CODASYL COBOL Committee as to the accuracy and functioning of the programming system and language. Moreover, no responsibility is assumed by any contributor, or by the committee, in connection therewith.

The authors and copyright holders of the copyrighted materials used herein:

- FLOW-MATIC1
- IBM®2 Commercial Translator Form No F 28-8013, copyrighted 1959 by IBM
- FACT©, DSI 27A5260-2760, copyrighted 1960 by Minneapolis-Honeywell

These parties have specifically authorized the use of this material in whole or in part, in the COBOL specifications. Such authorization extends to the reproduction and use of COBOL specifications in programming manuals or similar publications.

Notices

This information was developed for products and services offered in the U.S.A.

IBM may not offer the products, services, or features discussed in this document in other countries. Consult your local IBM representative for information on the products and services currently available in your area. Any reference to an IBM product, program, or service is not intended to state or imply that only that IBM product, program, or service may be used. Any functionally equivalent product, program, or service that does not infringe any IBM intellectual property right may be used instead. However, it is the user's responsibility to evaluate and verify the operation of any non-IBM product, program, or service.

IBM may have patents or pending patent applications covering subject matter described in this document. The furnishing of this document does not give you any license to these patents. You can send license inquiries, in writing, to:

IBM Director of Licensing
IBM Corporation
North Castle Drive, MD-NC119
Armonk, NY 10504-1785
U.S.A.

For license inquiries regarding double-byte (DBCS) information, contact the IBM Intellectual Property Department in your country or send inquiries, in writing, to:

Intellectual Property Licensing
Legal and Intellectual Property Law
IBM Japan, Ltd.
19-21, Nihonbashi-Hakozakicho, Chuo-ku
Tokyo 103-8510, Japan

The following paragraph does not apply to the United Kingdom or any other country where such provisions are inconsistent with local law: INTERNATIONAL BUSINESS MACHINES CORPORATION PROVIDES THIS PUBLICATION "AS IS" WITHOUT WARRANTY OF ANY KIND, EITHER EXPRESS OR IMPLIED, INCLUDING, BUT NOT LIMITED TO, THE IMPLIED WARRANTIES OF NON-INFRINGEMENT, MERCHANTABILITY OR FITNESS FOR A PARTICULAR PURPOSE. Some states do not allow disclaimer of express or implied warranties in certain transactions, therefore, this statement may not apply to you.

This information could include technical inaccuracies or typographical errors. Changes are periodically made to the information herein; these changes will be incorporated in new editions of the publication. IBM may make improvements and/or changes in the product(s) and/or the program(s) described in this publication at any time without notice.

Any references in this information to non-IBM websites are provided for convenience only and do not in any manner serve as an endorsement of those websites. The materials at those websites are not part of the materials for this IBM product and use of those websites is at your own risk.

IBM may use or distribute any of the information you supply in any way it believes appropriate without incurring any obligation to you.

Licensees of this program who want to have information about it for the purpose of enabling: (i) the exchange of information between independently created programs and other programs (including this one) and (ii) the mutual use of the information which has been exchanged, should contact:

IBM Director of Licensing IBM Corporation
North Castle Drive, MD-NC119
Armonk, NY 10504-1785
U.S.A.

Such information may be available, subject to appropriate terms and conditions, including in some cases, payment of a fee.

© Copyright IBM Corp. 2021, 2025

The licensed program described in this document and all licensed material available for it are provided by IBM under terms of the IBM Customer Agreement, IBM International Program License Agreement or any equivalent agreement between us.

Any performance data contained herein was determined in a controlled environment. Therefore, the results obtained in other operating environments may vary significantly. Some measurements may have been made on development-level systems and there is no guarantee that these measurements will be the same on generally available systems. Furthermore, some measurements may have been estimated through extrapolation. Actual results may vary. Users of this document should verify the applicable data for their specific environment.

Information concerning non-IBM products was obtained from the suppliers of those products, their published announcements or other publicly available sources. IBM has not tested those products and cannot confirm the accuracy of performance, compatibility or any other claims related to non-IBM products. Questions on the capabilities of non-IBM products should be addressed to the suppliers of those products.

All statements regarding IBM's future direction or intent are subject to change or withdrawal without notice, and represent goals and objectives only.

This information contains examples of data and reports used in daily business operations. To illustrate them as completely as possible, the examples include the names of individuals, companies, brands, and products. All of these names are fictitious and any similarity to the names and addresses used by an actual business enterprise is entirely coincidental.

COPYRIGHT LICENSE:

This information contains sample application programs in source language, which illustrates programming techniques on various operating platforms. You may copy, modify, and distribute these sample programs in any form without payment to IBM, for the purposes of developing, using, marketing or distributing application programs conforming to the application programming interface for the operating platform for which the sample programs are written. These examples have not been thoroughly tested under all conditions. IBM, therefore, cannot guarantee or imply reliability, serviceability, or function of these programs. The sample programs are provided "AS IS", without warranty of any kind. IBM shall not be liable for any damages arising out of your use of the sample programs.

Each copy or any portion of these sample programs or any derivative work, must include a copyright notice as follows:

© (your company name) (year). Portions of this code are derived from IBM Corp. Sample Programs. © Copyright IBM Corp. .

PRIVACY POLICY CONSIDERATIONS:

IBM Software products, including software as a service solutions, ("Software Offerings") may use cookies or other technologies to collect product usage information, to help improve the end user experience, or to tailor interactions with the end user, or for other purposes. In many cases no personally identifiable information is collected by the Software Offerings. Some of our Software Offerings can help enable you to collect personally identifiable information. If this Software Offering uses cookies to collect personally identifiable information, specific information about this offering's use of cookies is set forth below.

This Software Offering does not use cookies or other technologies to collect personally identifiable information.

If the configurations deployed for this Software Offering provide you as customer the ability to collect personally identifiable information from end users via cookies and other technologies, you should seek your own legal advice about any laws applicable to such data collection, including any requirements for notice and consent.

For more information about the use of various technologies, including cookies, for these purposes, see IBM's Privacy Policy at http://www.ibm.com/privacy and IBM's Online Privacy Statement at http://www.ibm.com/privacy/details in the section entitled "Cookies, Web Beacons and Other Technologies," and the "IBM Software Products and Software-as-a-Service Privacy Statement" at http://www.ibm.com/software/info/product-privacy.

Programming interface information

This Language Reference documents intended Programming Interfaces that allow the customer to write programs to obtain the services of COBOL for Linux.

Trademarks

IBM, the IBM logo, and ibm.com® are trademarks or registered trademarks of International Business Machines Corp., registered in many jurisdictions worldwide.

Other product and service names might be trademarks of IBM or other companies. A current list of IBM trademarks is available on the Web at "Copyright and trademark information" at www.ibm.com/legal/copytrade.shtml.

Intel is a registered trademark of Intel Corporation or its subsidiaries in the United States and other countries.

Java and all Java-based trademarks and logos are trademarks or registered trademarks of Oracle and/or its affiliates.

Linux is a registered trademark of Linus Torvalds in the United States, other countries, or both.

Microsoft, Windows, Windows NT, and the Windows logo are trademarks of Microsoft Corporation in the United States, other countries, or both.

UNIX is a registered trademark of The Open Group in the United States and other countries.

Other product and service names might be trademarks of IBM or other companies.

Glossary

The terms in this glossary are defined in accordance with their meaning in COBOL. These terms might or might not have the same meaning in other languages.

glossary.html

This glossary includes terms and definitions from the following publications:

- *ANSI INCITS 23-1985, Programming languages - COBOL*, as amended by *ANSI INCITS 23a-1989, Programming Languages - COBOL - Intrinsic Function Module for COBOL*, and *ANSI INCITS 23b-1993, Programming Languages - Correction Amendment for COBOL*
- *ISO 1989:1985, Programming languages - COBOL*, as amended by *ISO/IEC 1989/AMD1:1992, Programming languages - COBOL: Intrinsic function module*
- *ANSI X3.172-2002, American National Standard Dictionary for Information Systems*
- *INCITS/ISO/IEC 1989-2002, Information technology - Programming languages - COBOL*
- *INCITS/ISO/IEC 1989:2014, Information technology - Programming languages, their environments and system software interfaces - Programming language COBOL*

American National Standard definitions are preceded by an asterisk (*).

A

*** abbreviated combined relation condition**
The combined condition that results from the explicit omission of a common subject or a common subject and common relational operator in a consecutive sequence of relation conditions.

abend
Abnormal termination of a program.

*** access mode**
The manner in which records are to be operated upon within a file.

*** actual decimal point**
The physical representation, using the decimal point characters period (.) or comma (,), of the decimal point position in a data item.

actual document encoding
For an XML document, one of the following encoding categories that the XML parser determines by examining the first few bytes of the document:

- ASCII
- EBCDIC
- UTF-8
- UTF-16, either big-endian or little-endian
- Other unsupported encoding
- No recognizable encoding

Linux native file system
Any of the local or network file systems that directly support encoded or binary stream files.

The Linux native file systems support line-sequential files directly, and are used as the file store for all the other COBOL file types.

*** alphabet-name**
A user-defined word, in the `SPECIAL-NAMES` paragraph of the `ENVIRONMENT DIVISION`, that assigns a name to a specific character set or collating sequence or both.

*** alphabetic character**
A letter or a space character.

© Copyright IBM Corp. 2021, 2025

alphabetic data item
A data item that is described with a PICTURE character string that contains only the symbol A. An alphabetic data item has USAGE DISPLAY.

*** alphanumeric character**
Any character in the single-byte character set of the computer.

alphanumeric character position
See *character position*.

alphanumeric data item
A general reference to a data item that is described implicitly or explicitly as USAGE DISPLAY, and that has category alphanumeric, alphanumeric-edited, or numeric-edited.

alphanumeric-edited data item
A data item that is described by a PICTURE character string that contains at least one instance of the symbol A or X and at least one of the simple insertion symbols B, 0, or /. An alphanumeric-edited data item has USAGE DISPLAY.

*** alphanumeric function**
A function whose value is composed of a string of one or more characters from the alphanumeric character set of the computer.

alphanumeric group item
A group item that is defined without a GROUP-USAGE NATIONAL clause. For operations such as INSPECT, STRING, and UNSTRING, an alphanumeric group item is processed as though all its content were described as USAGE DISPLAY regardless of the actual content of the group. For operations that require processing of the elementary items within a group, such as MOVE CORRESPONDING, ADD CORRESPONDING, or INITIALIZE, an alphanumeric group item is processed using group semantics.

alphanumeric literal
A literal that has an opening delimiter from the following set: ', ", X', X", Z', or Z". The string of characters can include any character in the character set of the computer.

*** alternate record key**
A key, other than the prime record key, whose contents identify a record within an indexed file.

ANSI (American National Standards Institute)
An organization that consists of producers, consumers, and general-interest groups and establishes the procedures by which accredited organizations create and maintain voluntary industry standards in the United States.

argument
(1) An identifier, a literal, an arithmetic expression, or a function-identifier that specifies a value to be used in the evaluation of a function. (2) An operand of the USING phrase of a CALL statement, used for passing values to a called program.

*** arithmetic operation**
The process caused by the execution of an arithmetic statement, or the evaluation of an arithmetic expression, that results in a mathematically correct solution to the arguments presented.

*** arithmetic operator**
A single character, or a fixed two-character combination that belongs to the following set:

Character	Meaning
+	Addition
-	Subtraction
*	Multiplication
/	Division
**	Exponentiation

*** arithmetic statement**
A statement that causes an arithmetic operation to be executed. The arithmetic statements are ADD, COMPUTE, DIVIDE, MULTIPLY, and SUBTRACT.

array
An aggregate that consists of data objects, each of which can be uniquely referenced by subscripting. An array is roughly analogous to a COBOL table.

*** ascending key**
A key upon the values of which data is ordered, starting with the lowest value of the key up to the highest value of the key, in accordance with the rules for comparing data items.

ASCII
American National Standard Code for Information Interchange. The standard code uses a coded character set that is based on 7-bit coded characters (8 bits including parity check). The standard is used for information interchange between data processing systems, data communication systems, and associated equipment. The ASCII set consists of control characters and graphic characters.

IBM has defined an extension to ASCII (characters 128-255).

ASCII-based multibyte code page
A UTF-8, EUC, or ASCII DBCS code page. Each ASCII-based multibyte code page includes both single-byte and multibyte characters. The encoding of the single-byte characters is the ASCII encoding.

ASCII DBCS
See *double-byte ASCII*.

assignment-name
A name that identifies the organization of a COBOL file and the name by which it is known to the system.

*** assumed decimal point**
A decimal point position that does not involve the existence of an actual character in a data item. The assumed decimal point has logical meaning but no physical representation.

AT END condition
A condition that is caused during the execution of a READ, RETURN, or SEARCH statement under certain conditions:

- A READ statement runs on a sequentially accessed file when no next logical record exists in the file, or when the number of significant digits in the relative record number is larger than the size of the relative key data item, or when an optional input file is not available.
- A RETURN statement runs when no next logical record exists for the associated sort or merge file.
- A SEARCH statement runs when the search operation terminates without satisfying the condition specified in any of the associated WHEN phrases.

B

basic character set
The basic set of characters used in writing words, character-strings, and separators of the language. The basic character set is implemented in single-byte characters. The extended character set includes DBCS, UTF-8, or EUC characters, which can be used in comments, literals, and user-defined words.

Synonymous with *COBOL character set* in the 85 COBOL Standard.

big-endian
The default format that the mainframe and the Linux workstation use to store binary data and UTF-16 characters. In this format, the least significant byte of a binary data item is at the highest address and the least significant byte of a UTF-16 character is at the highest address. Compare with *little-endian*.

binary item
A numeric data item that is represented in binary notation (on the base 2 numbering system). The decimal equivalent consists of the decimal digits 0 through 9, plus an operational sign. The leftmost bit of the item is the operational sign.

binary search
A dichotomizing search in which, at each step of the search, the set of data elements is divided by two; some appropriate action is taken in the case of an odd number.

*** block**
A physical unit of data that is normally composed of one or more logical records. For mass storage files, a block can contain a portion of a logical record. The size of a block has no direct relationship to the size of the file within which the block is contained or to the size of the logical records that are either contained within the block or that overlap the block. Synonymous with *physical record*.

boolean condition
A boolean condition determines whether a boolean literal is true or false. A boolean condition can only be used in a constant conditional expression.

boolean literal
Can be either B'1', indicating a true value, or B'0', indicating a false value. Boolean literals can only be used in constant conditional expressions.

breakpoint
A place in a computer program, usually specified by an instruction, where external intervention or a monitor program can interrupt the program as it runs.

buffer
A portion of storage that is used to hold input or output data temporarily.

built-in function
See *intrinsic function*.

byte
A string that consists of a certain number of bits, usually eight, treated as a unit, and representing a character or a control function.

byte order mark (BOM)
A Unicode character that can be used at the start of UTF-16 or UTF-32 text to indicate the byte order of subsequent text; the byte order can be either big-endian or little-endian.

bytecode
Machine-independent code that is generated by the Java compiler and executed by the Java interpreter. (Oracle)

C

called program
A program that is the object of a `CALL` statement. At run time the called program and calling program are combined to produce a *run unit*.

*** calling program**
A program that executes a `CALL` to another program.

case structure
A program-processing logic in which a series of conditions is tested in order to choose between a number of resulting actions.

CCSID
See *coded character set identifier*.

century window
A 100-year interval within which any two-digit year is unique. Several types of century window are available to COBOL programmers:

- For windowed date fields, you use the `YEARWINDOW` compiler option.
- For the windowing intrinsic functions `DATE-TO-YYYYMMDD`, `DAY-TO-YYYYDDD`, and `YEAR-TO-YYYY`, you specify the century window with *argument-2*.

*** character**
The basic indivisible unit of the language.

character encoding unit
A unit of data that corresponds to one code point in a coded character set. One or more character encoding units are used to represent a character in a coded character set. Also known as *encoding unit*.

For `USAGE NATIONAL`, a character encoding unit corresponds to one 2-byte code point of UTF-16.

For `USAGE DISPLAY`, a character encoding unit corresponds to a byte.

For `USAGE DISPLAY-1`, a character encoding unit corresponds to a 2-byte code point in the DBCS character set.

character position
The amount of physical storage or presentation space required to hold or present one character. The term applies to any class of character. For specific classes of characters, the following terms apply:

- *Alphanumeric character position*, for characters represented in `USAGE DISPLAY`
- *DBCS character position*, for DBCS characters represented in `USAGE DISPLAY-1`
- *National character position*, for characters represented in `USAGE NATIONAL`; synonymous with *character encoding unit* for UTF-16

character set
A collection of elements that are used to represent textual information, but for which no coded representation is assumed. See also *coded character set*.

character string
A sequence of contiguous characters that form a COBOL word, a literal, a `PICTURE` character string, or a comment-entry. A character string must be delimited by separators.

checkpoint
A point at which information about the status of a job and the system can be recorded so that the job step can be restarted later.

*** class**
The entity that defines common behavior and implementation for zero, one, or more objects. The objects that share the same implementation are considered to be objects of the same class. Classes can be defined hierarchically, allowing one class to inherit from another.

*** class condition**
The proposition (for which a truth value can be determined) that the content of an item is wholly alphabetic, is wholly numeric, is wholly DBCS, is wholly Kanji, or consists exclusively of the characters that are listed in the definition of a class-name.

*** class-name (of data)**
A user-defined word that is defined in the `SPECIAL-NAMES` paragraph of the `ENVIRONMENT DIVISION`; this word assigns a name to the proposition (for which a truth value can be defined) that the content of a data item consists exclusively of the characters that are listed in the definition of the class-name.

*** clause**
An ordered set of consecutive COBOL character strings whose purpose is to specify an attribute of an entry.

COBOL character set
The set of characters used in writing COBOL syntax. The complete COBOL character set consists of these characters:

Character	Meaning
0,1, . . . ,9	Digit
A,B, . . . ,Z	Uppercase letter
a,b, . . . ,z	Lowercase letter
	Space

Character	Meaning
+	Plus sign
-	Minus sign (hyphen)
*	Asterisk
/	Slant (forward slash)
=	Equal sign
$	Currency sign
,	Comma
;	Semicolon
.	Period (decimal point, full stop)
"	Quotation mark
'	Apostrophe
(	Left parenthesis
)	Right parenthesis
>	Greater than
<	Less than
:	Colon
_	Underscore

*** COBOL word**
See *word*.

code page
An assignment of graphic characters and control function meanings to all code points. For example, one code page could assign characters and meanings to 256 code points for 8-bit code, and another code page could assign characters and meanings to 128 code points for 7-bit code. For example, one of the IBM code pages for English on the workstation is IBM-1252 and on the host is IBM-1047.

code point
A unique bit pattern that is defined in a coded character set (code page). Graphic symbols and control characters are assigned to code points.

coded character set
A set of unambiguous rules that establish a character set and the relationship between the characters of the set and their coded representation. Examples of coded character sets are the character sets as represented by ASCII or EBCDIC code pages or by the UTF-16 encoding scheme for Unicode.

coded character set identifier (CCSID)
An IBM-defined number in the range 1 to 65,535 that identifies a specific code page.

*** collating sequence**
The sequence in which the characters that are acceptable to a computer are ordered for purposes of sorting, merging, comparing, and for processing indexed files sequentially.

*** column**
A byte position within a print line or within a reference format line. The columns are numbered from 1, by 1, starting at the leftmost position of the line and extending to the rightmost position of the line. A column holds one single-byte character.

*** combined condition**
A condition that is the result of connecting two or more conditions with the AND or the OR logical operator. See also *condition* and *negated combined condition*.

*** comment-entry**
An entry in the `IDENTIFICATION DIVISION` that is used for documentation and has no effect on execution.

comment line
A source program line represented by an asterisk (*) in the indicator area of the line or by an asterisk followed by greater-than sign (*>) as the first character string in the program text area (Area A plus Area B), and any characters from the character set of the computer that follow in Area A and Area B of that line. A comment line serves only for documentation. A special form of comment line represented by a slant (/) in the indicator area of the line and any characters from the character set of the computer in Area A and Area B of that line causes page ejection before the comment is printed.

*** common program**
A program that, despite being directly contained within another program, can be called from any program directly or indirectly contained in that other program.

compatible date field
The meaning of the term *compatible*, when applied to date fields, depends on the COBOL division in which the usage occurs:

- `DATA DIVISION`: Two date fields are compatible if they have identical `USAGE` and meet at least one of the following conditions:
  - They have the same date format.
  - Both are windowed date fields, where one consists only of a windowed year, `DATE FORMAT YY`.
  - Both are expanded date fields, where one consists only of an expanded year, `DATE FORMAT YYYY`.
  - One has `DATE FORMAT YYXXXX`, and the other has `YYXX`.
  - One has `DATE FORMAT YYYYXXXX`, and the other has `YYYYXX`.

  A windowed date field can be subordinate to a data item that is an expanded date group. The two date fields are compatible if the subordinate date field has `USAGE DISPLAY`, starts two bytes after the start of the group expanded date field, and the two fields meet at least one of the following conditions:
  - The subordinate date field has a `DATE FORMAT` pattern with the same number of Xs as the `DATE FORMAT` pattern of the group date field.
  - The subordinate date field has `DATE FORMAT YY`.
  - The group date field has `DATE FORMAT YYYYXXXX` and the subordinate date field has `DATE FORMAT YYXX`.
- `PROCEDURE DIVISION`: Two date fields are compatible if they have the same date format except for the year part, which can be windowed or expanded. For example, a windowed date field with `DATE FORMAT YYXXX` is compatible with:
  - Another windowed date field with `DATE FORMAT YYXXX`
  - An expanded date field with `DATE FORMAT YYYYXXX`

*** compile**
(1) To translate a program expressed in a high-level language into a program expressed in an intermediate language, assembly language, or a computer language. (2) To prepare a machine-language program from a computer program written in another programming language by making use of the overall logic structure of the program, or generating more than one computer instruction for each symbolic statement, or both, as well as performing the function of an assembler.

compilation variable
A symbolic name for a particular literal value or the value of a compile-time arithmetic expression as specified by the `DEFINE` directive or by the `DEFINE` compiler option.

*** compile time**
The time at which COBOL source code is translated, by a COBOL compiler, to a COBOL object program.

compile-time arithmetic expression
A subset of arithmetic expressions that are specified in the DEFINE and EVALUATE directives or in a constant conditional expression. The difference between compile-time arithmetic expressions and regular arithmetic expressions is that in a compile-time arithmetic expression:

- The exponentiation operator shall not be specified.
- All operands shall be integer numeric literals or arithmetic expressions in which all operands are integer numeric literals.
- The expression shall be specified in such a way that a division by zero does not occur.

compiler
A program that translates source code written in a higher-level language into machine-language object code.

compiler-directing statement
A statement that causes the compiler to take a specific action during compilation. The standard compiler-directing statements are COPY, REPLACE, and USE.

compiler directive
A directive that causes the compiler to take a specific action during compilation. COBOL for Linux supports the CALLINTERFACE compiler directive, as well as Conditional compilation compiler directives (DEFINE, EVALUATE, and IF).

*** complex condition**
A condition in which one or more logical operators act upon one or more conditions. See also *condition*, *negated simple condition*, and *negated combined condition*.

complex ODO
Certain forms of the OCCURS DEPENDING ON clause:

- Variably located item or group: A data item described by an OCCURS clause with the DEPENDING ON option is followed by a nonsubordinate data item or group. The group can be an alphanumeric group or a national group.
- Variably located table: A data item described by an OCCURS clause with the DEPENDING ON option is followed by a nonsubordinate data item described by an OCCURS clause.
- Table with variable-length elements: A data item described by an OCCURS clause contains a subordinate data item described by an OCCURS clause with the DEPENDING ON option.
- Index name for a table with variable-length elements.
- Element of a table with variable-length elements.

component
(1) A functional grouping of related files. (2) In object-oriented programming, a reusable object or program that performs a specific function and is designed to work with other components and applications. JavaBeans is Oracle's architecture for creating components.

*** computer-name**
A system-name that identifies the computer where the program is to be compiled or run.

condition (exception)
Any alteration to the normal programmed flow of an application. Conditions can be detected by the hardware or the operating system and result in an interrupt. They can also be detected by language-specific generated code or language library code.

condition (expression)
A status of data at run time for which a truth value can be determined. Where used in this information in or in reference to "condition" (*condition-1*, *condition-2*,. . .) of a general format, the term refers to a conditional expression that consists of either a simple condition optionally parenthesized or a combined condition (consisting of the syntactically correct combination of simple conditions, logical operators, and parentheses) for which a truth value can be determined. See also *simple condition*, *complex condition*, *negated simple condition*, *combined condition*, and *negated combined condition*.

*** conditional expression**
A simple condition or a complex condition specified in an EVALUATE, IF, PERFORM, or SEARCH statement. See also *simple condition* and *complex condition*.

*** conditional phrase**
A phrase that specifies the action to be taken upon determination of the truth value of a condition that results from the execution of a conditional statement.

*** conditional statement**
A statement that specifies that the truth value of a condition is to be determined and that the subsequent action of the object program depends on this truth value.

*** conditional variable**
A data item one or more values of which has a condition-name assigned to it.

*** condition-name**
A user-defined word that assigns a name to a subset of values that a conditional variable can assume; or a user-defined word assigned to a status of an implementor-defined switch or device.

*** condition-name condition**
The proposition (for which a truth value can be determined) that the value of a conditional variable is a member of the set of values attributed to a condition-name associated with the conditional variable.

*** CONFIGURATION SECTION**
A section of the ENVIRONMENT DIVISION that describes overall specifications of source and object programs.

CONSOLE
A COBOL environment-name associated with the operator console.

constant conditional expression
A subset of conditional expressions that may be used in IF directives or WHEN phrases of the EVALUATE directives.

A constant conditional expression shall be one of the following items:

- A relation condition in which both operands are literals or arithmetic expressions that contain only literal terms. The condition shall follow the rules for relation conditions, with the following additions:
  - The operands shall be of the same category. An arithmetic expression is of the category numeric.
  - If literals are specified and they are not numeric literals, the relational operator shall be "IS EQUAL TO", "IS NOT EQUAL TO", "IS =", "IS NOT =", or "IS <>".

  See also *relation condition*.
- A defined condition. See also *defined condition*.
- A boolean condition. See also *boolean condition*.
- A complex condition formed by combining the above forms of simple conditions into complex conditions by using AND, OR, and NOT. Abbreviated combined relation conditions shall not be specified. See also *complex condition*.

contained program
A COBOL program that is nested within another COBOL program.

*** contiguous items**
Items that are described by consecutive entries in the DATA DIVISION, and that bear a definite hierarchic relationship to each other.

copybook
A file or library member that contains a sequence of code that is included in the source program at compile time using the COPY statement. The file can be created by the user, supplied by COBOL, or supplied by another product. Synonymous with *copy file*.

*** counter**
A data item used for storing numbers or number representations in a manner that permits these numbers to be increased or decreased by the value of another number, or to be changed or reset to zero or to an arbitrary positive or negative value.

cross-reference listing
The portion of the compiler listing that contains information on where files, fields, and indicators are defined, referenced, and modified in a program.

currency-sign value
A character string that identifies the monetary units stored in a numeric-edited item. Typical examples are $, USD, and EUR. A currency-sign value can be defined by either the CURRENCY compiler option or the CURRENCY SIGN clause in the SPECIAL-NAMES paragraph of the ENVIRONMENT DIVISION. If the CURRENCY SIGN clause is not specified and the NOCURRENCY compiler option is in effect, the dollar sign ($) is used as the default currency-sign value. See also *currency symbol*.

currency symbol
A character used in a PICTURE clause to indicate the position of a currency sign value in a numeric-edited item. A currency symbol can be defined by either the CURRENCY compiler option or the CURRENCY SIGN clause in the SPECIAL-NAMES paragraph of the ENVIRONMENT DIVISION. If the CURRENCY SIGN clause is not specified and the NOCURRENCY compiler option is in effect, the dollar sign ($) is used as the default currency sign value and currency symbol. Multiple currency symbols and currency sign values can be defined. See also *currency sign value*.

*** current record**
In file processing, the record that is available in the record area associated with a file.

*** current volume pointer**
A conceptual entity that points to the current volume of a sequential file.

D

*** data clause**
A clause, appearing in a data description entry in the DATA DIVISION of a COBOL program, that provides information describing a particular attribute of a data item.

*** data description entry**
An entry in the DATA DIVISION of a COBOL program that is composed of a level-number followed by a data-name, if required, and then followed by a set of data clauses, as required.

DATA DIVISION
The division of a COBOL program that describes the data to be processed by the program: the files to be used and the records contained within them; internal WORKING-STORAGE records that will be needed; data to be made available in more than one program in the COBOL run unit.

*** data item**
A unit of data (excluding literals) defined by a COBOL program or by the rules for function evaluation.

*** data-name**
A user-defined word that names a data item described in a data description entry. When used in the general formats, data-name represents a word that must not be reference-modified, subscripted, or qualified unless specifically permitted by the rules for the format.

date field
Any of the following items:

- A data item whose data description entry includes a DATE FORMAT clause.
- A value returned by one of the following intrinsic functions:

```
DATE-OF-INTEGER
DATE-TO-YYYYMMDD
DATEVAL
DAY-OF-INTEGER
DAY-TO-YYYYDDD
YEAR-TO-YYYY
YEARWINDOW
```

- The conceptual data items DATE, DATE YYYYMMDD, DAY, and DAY YYYYDDD of the ACCEPT statement.

- The result of certain arithmetic operations. For details, see Arithmetic with date fields (*COBOL for Linux on x86 Language Reference*).

The term *date field* refers to both *expanded date field* and *windowed date field*. See also *nondate*.

date format
The date pattern of a date field, specified in either of the following ways:

- Explicitly, by the `DATE FORMAT` clause or `DATEVAL` intrinsic function argument-2
- Implicitly, by statements and intrinsic functions that return date fields. For details, see Date field (*COBOL for Linux on x86 Language Reference*).

Db2 file system
The Db2 file system supports sequential, indexed, and relative files. It provides enhanced interoperation with CICS, enabling batch COBOL programs to access CICS ESDS, KSDS, and RRDS files that are stored in Db2.

DBCS
See *double-byte character set (DBCS)*.

DBCS character
Any character defined in IBM's double-byte character set.

DBCS character position
See *character position*.

DBCS data item
A data item that is described by a `PICTURE` character string that contains at least one symbol `G`, or, when the `NSYMBOL(DBCS)` compiler option is in effect, at least one symbol `N`. A DBCS data item has `USAGE DISPLAY-1`.

*** debugging line**
Any line with a D in the indicator area of the line.

*** debugging section**
A section that contains a `USE FOR DEBUGGING` statement.

*** declarative sentence**
A compiler-directing sentence that consists of a single USE statement terminated by the separator period.

*** declaratives**
A set of one or more special-purpose sections, written at the beginning of the `PROCEDURE DIVISION`, the first of which is preceded by the key word `DECLARATIVE` and the last of which is followed by the key words `END DECLARATIVES`. A declarative is composed of a section header, followed by a USE compiler-directing sentence, followed by a set of zero, one, or more associated paragraphs.

*** de-edit**
The logical removal of all editing characters from a numeric-edited data item in order to determine the unedited numeric value of the item.

defined condition
A compile-time condition that tests whether a compilation variable is defined. Defined conditions are specified in `IF` directives or `WHEN` phrases of the `EVALUATE` directives.

*** delimited scope statement**
Any statement that includes its explicit scope terminator.

*** delimiter**
A character or a sequence of contiguous characters that identify the end of a string of characters and separate that string of characters from the following string of characters. A delimiter is not part of the string of characters that it delimits.

*** descending key**
A key upon the values of which data is ordered starting with the highest value of key down to the lowest value of key, in accordance with the rules for comparing data items.

digit
Any of the numerals from 0 through 9. In COBOL, the term is not used to refer to any other symbol.

*** digit position**
The amount of physical storage required to store a single digit. This amount can vary depending on the usage specified in the data description entry that defines the data item.

*** direct access**
The facility to obtain data from storage devices or to enter data into a storage device in such a way that the process depends only on the location of that data and not on a reference to data previously accessed.

display floating-point data item
A data item that is described implicitly or explicitly as `USAGE DISPLAY` and that has a `PICTURE` character string that describes an external floating-point data item.

*** division**
A collection of zero, one, or more sections or paragraphs, called the division body, that are formed and combined in accordance with a specific set of rules. Each division consists of the division header and the related division body. There are four divisions in a COBOL program: Identification, Environment, Data, and Procedure.

*** division header**
A combination of words followed by a separator period that indicates the beginning of a division. The division headers are:

```
IDENTIFICATION DIVISION.
ENVIRONMENT DIVISION.
DATA DIVISION.
PROCEDURE DIVISION.
```

do construct
In structured programming, a `DO` statement is used to group a number of statements in a procedure. In COBOL, an inline `PERFORM` statement functions in the same way.

do-until
In structured programming, a do-until loop will be executed at least once, and until a given condition is true. In COBOL, a `TEST AFTER` phrase used with the `PERFORM` statement functions in the same way.

do-while
In structured programming, a do-while loop will be executed if, and while, a given condition is true. In COBOL, a `TEST BEFORE` phrase used with the `PERFORM` statement functions in the same way.

document type declaration
An XML element that contains or points to markup declarations that provide a grammar for a class of documents. This grammar is known as a document type definition, or DTD.

document type definition (DTD)
The grammar for a class of XML documents. See *document type declaration*.

double-byte ASCII
An IBM character set that includes DBCS and single-byte ASCII characters. (Also known as ASCII DBCS.)

double-byte EBCDIC
An IBM character set that includes DBCS and single-byte EBCDIC characters. (Also known as EBCDIC DBCS.)

double-byte character set (DBCS)
A set of characters in which each character is represented by 2 bytes. Languages such as Japanese, Chinese, and Korean, which contain more symbols than can be represented by 256 code points, require double-byte character sets. Because each character requires 2 bytes, entering, displaying, and printing DBCS characters requires hardware and supporting software that are DBCS-capable.

DWARF
DWARF was developed by the UNIX International Programming Languages Special Interest Group (SIG). It is designed to meet the symbolic, source-level debugging needs of different languages in a unified fashion by supplying language-independent debugging information. A DWARF file contains debugging data organized into different elements. For more information, see *DWARF program information* in the *DWARF/ELF Extensions Library Reference*.

*** dynamic access**
An access mode in which specific logical records can be obtained from or placed into a mass storage file in a nonsequential manner and obtained from a file in a sequential manner during the scope of the same OPEN statement.

dynamic CALL
A CALL *literal* statement in a program that has been compiled with the DYNAM option, or a CALL *identifier* statement in a program.

E

*** EBCDIC (Extended Binary-Coded Decimal Interchange Code)**
A coded character set based on 8-bit coded characters.

EBCDIC character
Any one of the symbols included in the EBCDIC (Extended Binary-Coded-Decimal Interchange Code) set.

EBCDIC DBCS
See *double-byte EBCDIC*.

edited data item
A data item that has been modified by suppressing zeros or inserting editing characters or both.

*** editing character**
A single character or a fixed two-character combination belonging to the following set:

Character	Meaning
	Space
0	Zero
+	Plus
-	Minus
CR	Credit
DB	Debit
Z	Zero suppress
*	Check protect
$	Currency sign
,	Comma (decimal point)
.	Period (decimal point)
/	Slant (forward slash)

element (text element)
One logical unit of a string of text, such as the description of a single data item or verb, preceded by a unique code identifying the element type.

*** elementary item**
A data item that is described as not being further logically subdivided.

CICS SFS file system
See *SFS file system*.

encoding unit
See *character encoding unit*.

*** end of `PROCEDURE DIVISION`**
The physical position of a COBOL source program after which no further procedures appear.

*** end program marker**
A combination of words, followed by a separator period, that indicates the end of a COBOL source program. The end program marker is:

```
END PROGRAM program-name.
```

*** entry**
Any descriptive set of consecutive clauses terminated by a separator period and written in the `IDENTIFICATION DIVISION`, `ENVIRONMENT DIVISION`, or `DATA DIVISION` of a COBOL program.

*** environment clause**
A clause that appears as part of an `ENVIRONMENT DIVISION` entry.

`ENVIRONMENT DIVISION`
One of the four main component parts of a COBOL program. The `ENVIRONMENT DIVISION` describes the computers where the source program is compiled and those where the object program is run. It provides a linkage between the logical concept of files and their records, and the physical aspects of the devices on which files are stored.

environment-name
A name, specified by IBM, that identifies system logical units, printer and card punch control characters, report codes, program switches or all of these. When an environment-name is associated with a mnemonic-name in the `ENVIRONMENT DIVISION`, the mnemonic-name can be substituted in any format in which such substitution is valid.

environment variable
Any of a number of variables that define some aspect of the computing environment, and are accessible to programs that operate in that environment. Environment variables can affect the behavior of programs that are sensitive to the environment in which they operate.

execution time
See *run time*.

execution-time environment
See *runtime environment*.

expanded date field
A date field containing an expanded (four-digit) year. See also *date field* and *expanded year*.

expanded year
A date field that consists only of a four-digit year. Its value includes the century: for example, 1998. Compare with *windowed year*.

*** explicit scope terminator**
A reserved word that terminates the scope of a particular `PROCEDURE DIVISION` statement.

exponent
A number that indicates the power to which another number (the base) is to be raised. Positive exponents denote multiplication; negative exponents denote division; and fractional exponents denote a root of a quantity. In COBOL, an exponential expression is indicated with the symbol ** followed by the exponent.

*** expression**
An arithmetic or conditional expression.

*** extend mode**
The state of a file after execution of an `OPEN` statement, with the `EXTEND` phrase specified for that file, and before the execution of a `CLOSE` statement, without the `REEL` or `UNIT` phrase for that file.

Extensible Markup Language
See *XML*.

extensions
COBOL syntax and semantics supported by IBM compilers in addition to those described in the 85 COBOL Standard.

external code page
For ASCII or UTF-8 XML documents, the code page indicated by the current runtime locale. For EBCDIC XML documents, either:

- The code page specified in the EBCDIC_CODEPAGE environment variable
- The default EBCDIC code page selected for the current runtime locale if the EBCDIC_CODEPAGE environment variable is not set

*** external data**
The data that is described in a program as external data items and external file connectors.

*** external data item**
A data item that is described as part of an external record in one or more programs of a run unit and that can be referenced from any program in which it is described.

*** external data record**
A logical record that is described in one or more programs of a run unit and whose constituent data items can be referenced from any program in which they are described.

external decimal data item
See *zoned decimal data item* and *national decimal data item*.

*** external file connector**
A file connector that is accessible to one or more object programs in the run unit.

external floating-point data item
See *display floating-point data item* and *national floating-point data item*.

external program
The outermost program. A program that is not nested.

*** external switch**
A hardware or software device, defined and named by the implementor, which is used to indicate that one of two alternate states exists.

F

*** figurative constant**
A compiler-generated value referenced through the use of certain reserved words.

*** file**
A collection of logical records.

*** file attribute conflict condition**
An unsuccessful attempt has been made to execute an input-output operation on a file and the file attributes, as specified for that file in the program, do not match the fixed attributes for that file.

*** file clause**
A clause that appears as part of any of the following `DATA DIVISION` entries: file description entry (FD entry) and sort-merge file description entry (SD entry).

*** file connector**
A storage area that contains information about a file and is used as the linkage between a file-name and a physical file and between a file-name and its associated record area.

*** file control entry**
A `SELECT` clause and all its subordinate clauses that declare the relevant physical attributes of a file.

`FILE-CONTROL` paragraph
A paragraph in the `ENVIRONMENT DIVISION` in which the data files for a given source unit are declared.

*** file description entry**
An entry in the `FILE SECTION` of the `DATA DIVISION` that is composed of the level indicator FD, followed by a file-name, and then followed by a set of file clauses as required.

*** file-name**
A user-defined word that names a file connector described in a file description entry or a sort-merge file description entry within the `FILE SECTION` of the `DATA DIVISION`.

*** file organization**
The permanent logical file structure established at the time that a file is created.

file position indicator
A conceptual entity that contains the value of the current key within the key of reference for an indexed file, or the record number of the current record for a sequential file, or the relative record number of the current record for a relative file, or indicates that no next logical record exists, or that an optional input file is not available, or that the `AT END` condition already exists, or that no valid next record has been established.

*** `FILE SECTION`**
The section of the `DATA DIVISION` that contains file description entries and sort-merge file description entries together with their associated record descriptions.

file system
The collection of files that conform to a specific set of data-record and file-description protocols, and a set of programs that manage these files.

*** fixed file attributes**
Information about a file that is established when a file is created and that cannot subsequently be changed during the existence of the file. These attributes include the organization of the file (sequential, relative, or indexed), the prime record key, the alternate record keys, the code set, the minimum and maximum record size, the record type (fixed or variable), the collating sequence of the keys for indexed files, the blocking factor, the padding character, and the record delimiter.

*** fixed-length record**
A record associated with a file whose file description or sort-merge description entry requires that all records contain the same number of bytes.

fixed-point item
A numeric data item defined with a `PICTURE` clause that specifies the location of an optional sign, the number of digits it contains, and the location of an optional decimal point. The format can be either binary, packed decimal, or external decimal.

floating comment indicators (*>)
A floating comment indicator indicates a comment line if it is the first character string in the program-text area (Area A plus Area B), or indicates an inline comment if it is after one or more character strings in the program-text area.

floating point
A format for representing numbers in which a real number is represented by a pair of distinct numerals. In a floating-point representation, the real number is the product of the fixed-point part (the first numeral) and a value obtained by raising the implicit floating-point base to a power denoted by the exponent (the second numeral). For example, a floating-point representation of the number 0.0001234 is 0.1234 -3, where 0.1234 is the mantissa and -3 is the exponent.

floating-point data item
A numeric data item that contains a fraction and an exponent. Its value is obtained by multiplying the fraction by the base of the numeric data item raised to the power that the exponent specifies.

*** format**
A specific arrangement of a set of data.

*** function**
A temporary data item whose value is determined at the time the function is referenced during the execution of a statement.

*** function-identifier**
A syntactically correct combination of character strings and separators that references a function. The data item represented by a function is uniquely identified by a function-name with its arguments, if any. A function-identifier can include a reference-modifier. A function-identifier that references an alphanumeric function can be specified anywhere in the general formats that an identifier can be

specified, subject to certain restrictions. A function-identifier that references an integer or numeric function can be referenced anywhere in the general formats that an arithmetic expression can be specified.

function-name
A word that names the mechanism whose invocation, along with required arguments, determines the value of a function.

function-pointer data item
A data item in which a pointer to an entry point can be stored. A data item defined with the USAGE `IS FUNCTION-POINTER` clause contains the address of a function entry point. Typically used to communicate with C and Java programs.

G

garbage collection
The automatic freeing by the Java runtime system of the memory for objects that are no longer referenced.

GDG
See *generation data group (GDG)*.

GDS
See *generation data set (GDS)*.

generation data group (GDG)
A collection of chronologically related files; each such file is called a *generation data set (GDS)* or generation.

generation data set (GDS)
One of the files in a *generation data group (GDG)*; each such file is chronologically related to the other files in the group.

*** global name**
A name that is declared in only one program but that can be referenced from the program and from any program contained within the program. Condition-names, data-names, file-names, record-names, report-names, and some special registers can be global names.

group item
(1) A data item that is composed of subordinate data items. See *alphanumeric group item* and *national group item*. (2) When not qualified explicitly or by context as a national group or an alphanumeric group, the term refers to groups in general.

grouping separator
A character used to separate units of digits in numbers for ease of reading. The default is the character comma.

H

header label
(1) A label that precedes the data records in a unit of recording media. (2) Synonym for *beginning-of-file label*.

*** high-order end**
The leftmost character of a string of characters.

host alphanumeric data item
(Of XML documents) A category alphanumeric data item whose data description entry does not contain the `NATIVE` phrase, and that was compiled with the `CHAR(EBCDIC)` option in effect. The encoding for the data item is the EBCDIC code page in effect. This code page is determined from the EBCDIC_CODEPAGE environment variable, if set, otherwise from the default code page associated with the runtime locale.

I

IBM COBOL extension
COBOL syntax and semantics supported by IBM compilers in addition to those described in the 85 COBOL Standard.

ICU
See *International Components for Unicode (ICU)*.

IDENTIFICATION DIVISION
One of the four main component parts of a COBOL program. The `IDENTIFICATION DIVISION` identifies the program, class. The `IDENTIFICATION DIVISION` can include the following documentation: author name, installation, or date.

*** identifier**
A syntactically correct combination of character strings and separators that names a data item. When referencing a data item that is not a function, an identifier consists of a data-name, together with its qualifiers, subscripts, and reference-modifier, as required for uniqueness of reference. When referencing a data item that is a function, a function-identifier is used.

*** imperative statement**
A statement that either begins with an imperative verb and specifies an unconditional action to be taken or is a conditional statement that is delimited by its explicit scope terminator (delimited scope statement). An imperative statement can consist of a sequence of imperative statements.

*** implicit scope terminator**
A separator period that terminates the scope of any preceding unterminated statement, or a phrase of a statement that by its occurrence indicates the end of the scope of any statement contained within the preceding phrase.

*** index**
A computer storage area or register, the content of which represents the identification of a particular element in a table.

*** index data item**
A data item in which the values associated with an index-name can be stored in a form specified by the implementor.

indexed data-name
An identifier that is composed of a data-name, followed by one or more index-names enclosed in parentheses.

*** indexed file**
A file with indexed organization.

*** indexed organization**
The permanent logical file structure in which each record is identified by the value of one or more keys within that record.

indexing
Synonymous with *subscripting* using index-names.

*** index-name**
A user-defined word that names an index associated with a specific table.

*** initial program**
A program that is placed into an initial state every time the program is called in a run unit.

*** initial state**
The state of a program when it is first called in a run unit.

inline
In a program, instructions that are executed sequentially, without branching to routines, subroutines, or other programs.

*** input file**
A file that is opened in the input mode.

*** input mode**
The state of a file after execution of an `OPEN` statement, with the `INPUT` phrase specified, for that file and before the execution of a `CLOSE` statement, without the `REEL` or `UNIT` phrase for that file.

*** input-output file**
A file that is opened in the `I-O` mode.

*** INPUT-OUTPUT SECTION**
The section of the ENVIRONMENT DIVISION that names the files and the external media required by an object program and that provides information required for transmission and handling of data at run time.

*** input-output statement**
A statement that causes files to be processed by performing operations on individual records or on the file as a unit. The input-output statements are ACCEPT (with the identifier phrase), CLOSE, DELETE, DISPLAY, OPEN, READ, REWRITE, SET (with the TO ON or TO OFF phrase), START, and WRITE.

*** input procedure**
A set of statements, to which control is given during the execution of a SORT statement, for the purpose of controlling the release of specified records to be sorted.

*** integer**
(1) A numeric literal that does not include any digit positions to the right of the decimal point. (2) A numeric data item defined in the DATA DIVISION that does not include any digit positions to the right of the decimal point. (3) A numeric function whose definition provides that all digits to the right of the decimal point are zero in the returned value for any possible evaluation of the function.

integer function
A function whose category is numeric and whose definition does not include any digit positions to the right of the decimal point.

interlanguage communication (ILC)
The ability of routines written in different programming languages to communicate. ILC support lets you readily build applications from component routines written in a variety of languages.

intermediate result
An intermediate field that contains the results of a succession of arithmetic operations.

*** internal data**
The data that is described in a program and excludes all external data items and external file connectors. Items described in the LINKAGE SECTION of a program are treated as internal data.

*** internal data item**
A data item that is described in one program in a run unit. An internal data item can have a global name.

internal decimal data item
A data item that is described as USAGE PACKED-DECIMAL or USAGE COMP-3, and that has a PICTURE character string that defines the item as numeric (a valid combination of symbols 9, S, P, or V). Synonymous with *packed-decimal data item*.

*** internal file connector**
A file connector that is accessible to only one object program in the run unit.

internal floating-point data item
A data item that is described as USAGE COMP-1 or USAGE COMP-2. COMP-1 defines a single-precision floating-point data item. COMP-2 defines a double-precision floating-point data item. There is no PICTURE clause associated with an internal floating-point data item.

International Components for Unicode (ICU)
An open-source development project sponsored, supported, and used by IBM. ICU libraries provide robust and full-featured Unicode services on a wide variety of platforms, including AIX and Linux.

*** intrarecord data structure**
The entire collection of groups and elementary data items from a logical record that a contiguous subset of the data description entries defines. These data description entries include all entries whose level-number is greater than the level-number of the first data description entry describing the intra-record data structure.

intrinsic function
A predefined function, such as a commonly used arithmetic function, called by a built-in function reference.

*** invalid key condition**
A condition, at run time, caused when a specific value of the key associated with an indexed or relative file is determined to be not valid.

*** `I-O-CONTROL`**
The name of an `ENVIRONMENT DIVISION` paragraph in which object program requirements for rerun points, sharing of same areas by several data files, and multiple file storage on a single input-output device are specified.

*** `I-O-CONTROL` entry**
An entry in the `I-O-CONTROL` paragraph of the `ENVIRONMENT DIVISION`; this entry contains clauses that provide information required for the transmission and handling of data on named files during the execution of a program.

*** I-O mode**
The state of a file after execution of an `OPEN` statement, with the `I-O` phrase specified, for that file and before the execution of a `CLOSE` statement without the `REEL` or `UNIT` phase for that file.

*** I-O status**
A conceptual entity that contains the two-character value indicating the resulting status of an input-output operation. This value is made available to the program through the use of the `FILE STATUS` clause in the file control entry for the file.

iteration structure
A program processing logic in which a series of statements is repeated while a condition is true or until a condition is true.

J

J2EE
See *Java 2 Platform, Enterprise Edition (J2EE)*.

Java 2 Platform, Enterprise Edition (J2EE)
An environment for developing and deploying enterprise applications, defined by Oracle. The J2EE platform consists of a set of services, application programming interfaces (APIs), and protocols that provide the functionality for developing multitiered, Web-based applications. (Oracle)

Java Native Interface (JNI)
A programming interface that lets Java code that runs inside a Java virtual machine (JVM) interoperate with applications and libraries written in other programming languages.

Java virtual machine (JVM)
A software implementation of a central processing unit that runs compiled Java programs.

JSON
JSON (JavaScript Object Notation) is a lightweight data-interchange format.

JVM
See *Java virtual machine (JVM)*.

K

K
When referring to storage capacity, two to the tenth power; 1024 in decimal notation.

*** key**
A data item that identifies the location of a record, or a set of data items that serve to identify the ordering of data.

*** key of reference**
The key, either prime or alternate, currently being used to access records within an indexed file.

*** keyword**
A context-sensitive word or a reserved word whose presence is required when the format in which the word appears is used in a source unit.

kilobyte (KB)
One kilobyte equals 1024 bytes.

L

*** language-name**
A system-name that specifies a particular programming language.

last-used state
A state that a program is in if its internal values remain the same as when the program was exited (the values are not reset to their initial values).

*** letter**
A character belonging to one of the following two sets:

1. Uppercase letters: A, B, C, D, E, F, G, H, I, J, K, L, M, N, O, P, Q, R, S, T, U, V, W, X, Y, Z
2. Lowercase letters: a, b, c, d, e, f, g, h, i, j, k, l, m, n, o, p, q, r, s, t, u, v, w, x, y, z

*** level indicator**
Two alphabetic characters that identify a specific type of file or a position in a hierarchy. The level indicators in the `DATA DIVISION` are: `CD`, `FD`, and `SD`.

*** level-number**
A user-defined word (expressed as a two-digit number) that indicates the hierarchical position of a data item or the special properties of a data description entry. Level-numbers in the range from 1 through 49 indicate the position of a data item in the hierarchical structure of a logical record. Level-numbers in the range 1 through 9 can be written either as a single digit or as a zero followed by a significant digit. Level-numbers 66, 77, and 88 identify special properties of a data description entry.

*** library-name**
A user-defined word that names a COBOL library that the compiler is to use for compiling a given source program.

*** library text**
A sequence of text words, comment lines, the separator space, or the separator pseudo-text delimiter in a COBOL library.

Lilian date
The number of days since the beginning of the Gregorian calendar. Day one is Friday, October 15, 1582. The Lilian date format is named in honor of Luigi Lilio, the creator of the Gregorian calendar.

*** linage-counter**
A special register whose value points to the current position within the page body.

link
(1) The combination of the link connection (the transmission medium) and two link stations, one at each end of the link connection. A link can be shared among multiple links in a multipoint or token-ring configuration. (2) To interconnect items of data or portions of one or more computer programs; for example, linking object programs by a linkage-editor to produce a shared library.

`LINKAGE SECTION`
The section in the `DATA DIVISION` of the called program that describes data items available from the calling program. Both the calling program and the called program can refer to these data items.

literal
A character string whose value is specified either by the ordered set of characters comprising the string or by the use of a figurative constant.

little-endian
The default format that Intel processors use to store binary data and UTF-16 characters. In this format, the most significant byte of a binary data item is at the highest address and the most significant byte of a UTF-16 character is at the highest address. Compare with *big-endian*.

locale
A set of attributes for a program execution environment that indicates culturally sensitive considerations, such as character code page, collating sequence, date and time format, monetary value representation, numeric value representation, or language.

*** LOCAL-STORAGE SECTION**
The section of the DATA DIVISION that defines storage that is allocated and freed on a per-invocation basis, depending on the value assigned in the VALUE clauses.

*** logical operator**
One of the reserved words AND, OR, or NOT. In the formation of a condition, either AND, or OR, or both can be used as logical connectives. NOT can be used for logical negation.

*** logical record**
The most inclusive data item. The level-number for a record is 01. A record can be either an elementary item or a group of items. Synonymous with *record*.

*** low-order end**
The rightmost character of a string of characters.

LSQ file system
The LSQ file system supports only LINE SEQUENTIAL files.

M

main program
In a hierarchy of programs and subroutines, the first program that receives control when the programs are run within a process.

makefile
A text file that contains a list of the files for your application. The make utility uses this file to update the target files with the latest changes.

*** mass storage**
A storage medium in which data can be organized and maintained in both a sequential manner and a nonsequential manner.

*** mass storage device**
A device that has a large storage capacity, such as a magnetic disk.

*** mass storage file**
A collection of records that is stored in a mass storage medium.

MBCS
See *multibyte character set (MBCS)*.

*** megabyte (MB)**
One megabyte equals 1,048,576 bytes.

*** merge file**
A collection of records to be merged by a MERGE statement. The merge file is created and can be used only by the merge function.

*** mnemonic-name**
A user-defined word that is associated in the ENVIRONMENT DIVISION with a specified implementor-name.

module definition file
A file that describes the code segments within a load module.

multibyte character
Any character that is represented in 2 or more bytes in a multibyte character set. For example, a DBCS character or any UTF-8 character that is represented in two or more bytes. UTF-16 characters are not multibyte characters because UTF-16 is not a multibyte character set.

multibyte character set (MBCS)
A coded character set that is composed of characters represented in a varying number of bytes. Examples are: EUC (Extended Unix Code), UTF-8, and character sets composed of a mixture of single-byte and double-byte EBCDIC or ASCII characters.

multitasking
A mode of operation that provides for the concurrent, or interleaved, execution of two or more tasks.

multithreading
Concurrent operation of more than one path of execution within a computer. Synonymous with *multiprocessing*.

N

name
A word (composed of not more than 30 characters) that defines a COBOL operand.

namespace
See *XML namespace*.

national character
(1) A UTF-16 character in a `USAGE NATIONAL` data item or national literal. (2) Any character represented in UTF-16.

national character data
A general reference to data represented in UTF-16.

national character position
See *character position*.

national data
See *national character data*.

national data item
A data item of category national, national-edited, or numeric-edited of `USAGE NATIONAL`.

national decimal data item
An external decimal data item that is described implicitly or explicitly as `USAGE NATIONAL` and that contains a valid combination of `PICTURE` symbols `9`, `S`, `P`, and `V`.

national-edited data item
A data item that is described by a `PICTURE` character string that contains at least one instance of the symbol `N` and at least one of the simple insertion symbols `B`, `0`, or `/`. A national-edited data item has `USAGE NATIONAL`.

national floating-point data item
An external floating-point data item that is described implicitly or explicitly as `USAGE NATIONAL` and that has a `PICTURE` character string that describes a floating-point data item.

national group item
A group item that is explicitly or implicitly described with a `GROUP-USAGE NATIONAL` clause. A national group item is processed as though it were defined as an elementary data item of category national for operations such as `INSPECT`, `STRING`, and `UNSTRING`. This processing ensures correct padding and truncation of national characters, as contrasted with defining `USAGE NATIONAL` data items within an alphanumeric group item. For operations that require processing of the elementary items within a group, such as `MOVE CORRESPONDING`, `ADD CORRESPONDING`, and `INITIALIZE`, a national group is processed using group semantics.

native alphanumeric data item
(Of XML documents) A category alphanumeric data item that is described with the `NATIVE` phrase, or that was compiled with the `CHAR(NATIVE)` option in effect. The encoding for the data item is the ASCII or UTF-8 code page of the runtime locale in effect.

*** native character set**
The implementor-defined character set associated with the computer specified in the `OBJECT-COMPUTER` paragraph.

*** native collating sequence**
The implementor-defined collating sequence associated with the computer specified in the `OBJECT-COMPUTER` paragraph.

*** negated combined condition**
The NOT logical operator immediately followed by a parenthesized combined condition. See also *condition* and *combined condition*.

*** negated simple condition**
The NOT logical operator immediately followed by a simple condition. See also *condition* and *simple condition*.

nested program
A program that is directly contained within another program.

*** next executable sentence**
The next sentence to which control will be transferred after execution of the current statement is complete.

*** next executable statement**
The next statement to which control will be transferred after execution of the current statement is complete.

*** next record**
The record that logically follows the current record of a file.

*** noncontiguous items**
Elementary data items in the `WORKING-STORAGE SECTION` and `LINKAGE SECTION` that bear no hierarchic relationship to other data items.

nondate
Any of the following items:

- A data item whose date description entry does not include the `DATE FORMAT` clause
- A literal
- A date field that has been converted using the `UNDATE` function
- A reference-modified date field
- The result of certain arithmetic operations that can include date field operands; for example, the difference between two compatible date fields

null
A figurative constant that is used to assign, to pointer data items, the value of an address that is not valid. `NULLS` can be used wherever `NULL` can be used.

*** numeric character**
A character that belongs to the following set of digits: 0, 1, 2, 3, 4, 5, 6, 7, 8, 9.

numeric data item
(1) A data item whose description restricts its content to a value represented by characters chosen from the digits 0 through 9. If signed, the item can also contain a +, -, or other representation of an operational sign. (2) A data item of category numeric, internal floating-point, or external floating-point. A numeric data item can have `USAGE DISPLAY`, `NATIONAL`, `PACKED-DECIMAL`, `BINARY`, `COMP`, `COMP-1`, `COMP-2`, `COMP-3`, `COMP-4`, or `COMP-5`.

numeric-edited data item
A data item that contains numeric data in a form suitable for use in printed output. The data item can consist of external decimal digits from 0 through 9, the decimal separator, commas, the currency sign, sign control characters, and other editing characters. A numeric-edited item can be represented in either `USAGE DISPLAY` or `USAGE NATIONAL`.

*** numeric function**
A function whose class and category are numeric but that for some possible evaluation does not satisfy the requirements of integer functions.

*** numeric literal**
A literal composed of one or more numeric characters that can contain a decimal point or an algebraic sign, or both. The decimal point must not be the rightmost character. The algebraic sign, if present, must be the leftmost character.

O

object code
Output from a compiler or assembler that is itself executable machine code or is suitable for processing to produce executable machine code.

*** OBJECT-COMPUTER**
The name of an ENVIRONMENT DIVISION paragraph in which the computer environment, where the object program is run, is described.

*** object computer entry**
An entry in the OBJECT-COMPUTER paragraph of the ENVIRONMENT DIVISION; this entry contains clauses that describe the computer environment in which the object program is to be executed.

*** object of entry**
A set of operands and reserved words, within a DATA DIVISION entry of a COBOL program, that immediately follows the subject of the entry.

object program
A set or group of executable machine-language instructions and other material designed to interact with data to provide problem solutions. In this context, an object program is generally the machine language result of the operation of a COBOL compiler on a source program definition. Where there is no danger of ambiguity, the word *program* can be used in place of *object program*.

*** object time**
The time at which an object program is executed. Synonymous with *run time*.

*** obsolete element**
A COBOL language element in the 85 COBOL Standard that was deleted from the 2002 COBOL Standard.

ODBC
See *Open Database Connectivity (ODBC)*.

ODO object
In the example below, X is the object of the OCCURS DEPENDING ON clause (ODO object).

```
WORKING-STORAGE SECTION.
01  TABLE-1.
    05  X                   PIC S9.
    05  Y OCCURS 3 TIMES
          DEPENDING ON X    PIC X.
```

The value of the ODO object determines how many of the ODO subject appear in the table.

ODO subject
In the example above, Y is the subject of the OCCURS DEPENDING ON clause (ODO subject). The number of Y ODO subjects that appear in the table depends on the value of X.

Open Database Connectivity (ODBC)
A specification for an application programming interface (API) that provides access to data in a variety of databases and file systems.

*** open mode**
The state of a file after execution of an OPEN statement for that file and before the execution of a CLOSE statement without the REEL or UNIT phrase for that file. The particular open mode is specified in the OPEN statement as either INPUT, OUTPUT, I-O, or EXTEND.

*** operand**
(1) The general definition of operand is "the component that is operated upon." (2) For the purposes of this document, any lowercase word (or words) that appears in a statement or entry format can be considered to be an operand and, as such, is an implied reference to the data indicated by the operand.

operation
A service that can be requested of an object.

*** operational sign**
An algebraic sign that is associated with a numeric data item or a numeric literal, to indicate whether its value is positive or negative.

optional file
A file that is declared as being not necessarily available each time the object program is run.

*** optional word**
A reserved word that is included in a specific format only to improve the readability of the language. Its presence is optional to the user when the format in which the word appears is used in a source unit.

*** output file**
A file that is opened in either output mode or extend mode.

*** output mode**
The state of a file after execution of an OPEN statement, with the OUTPUT or EXTEND phrase specified, for that file and before the execution of a CLOSE statement without the REEL or UNIT phrase for that file.

*** output procedure**
A set of statements to which control is given during execution of a SORT statement after the sort function is completed, or during execution of a MERGE statement after the merge function reaches a point at which it can select the next record in merged order when requested.

overflow condition
A condition that occurs when a portion of the result of an operation exceeds the capacity of the intended unit of storage.

P

packed-decimal data item
See *internal decimal data item*.

padding character
An alphanumeric or national character that is used to fill the unused character positions in a physical record.

page
A vertical division of output data that represents a physical separation of the data. The separation is based on internal logical requirements or external characteristics of the output medium or both.

*** page body**
That part of the logical page in which lines can be written or spaced or both.

*** paragraph**
In the PROCEDURE DIVISION, a paragraph-name followed by a separator period and by zero, one, or more sentences. In the IDENTIFICATION DIVISION and ENVIRONMENT DIVISION, a paragraph header followed by zero, one, or more entries.

*** paragraph header**
A reserved word, followed by the separator period, that indicates the beginning of a paragraph in the IDENTIFICATION DIVISION and ENVIRONMENT DIVISION. The permissible paragraph headers in the IDENTIFICATION DIVISION are:

```
PROGRAM-ID. (Program IDENTIFICATION
   DIVISION)
AUTHOR.
INSTALLATION.
DATE-WRITTEN.
DATE-COMPILED.
SECURITY.
```

The permissible paragraph headers in the ENVIRONMENT DIVISION are:

```
SOURCE-COMPUTER.
OBJECT-COMPUTER.
SPECIAL-NAMES.
REPOSITORY. (Program
   CONFIGURATION SECTION)
FILE-CONTROL.
I-O-CONTROL.
```

*** paragraph-name**
A user-defined word that identifies and begins a paragraph in the PROCEDURE DIVISION.

parameter
Data passed between a calling program and a called program.

*** phrase**
An ordered set of one or more consecutive COBOL character strings that form a portion of a COBOL procedural statement or of a COBOL clause.

*** physical record**
See *block*.

pointer data item
A data item in which address values can be stored. Data items are explicitly defined as pointers with the `USAGE IS POINTER` clause. `ADDRESS OF` special registers are implicitly defined as pointer data items. Pointer data items can be compared for equality or moved to other pointer data items.

port
(1) To modify a computer program to enable it to run on a different platform. (2) In the Internet suite of protocols, a specific logical connector between the Transmission Control Protocol (TCP) or the User Datagram Protocol (UDP) and a higher-level protocol or application. A port is identified by a port number.

portability
The ability to transfer an application program from one application platform to another with relatively few changes to the source program.

*** prime record key**
A key whose contents uniquely identify a record within an indexed file.

*** priority-number**
A user-defined word that classifies sections in the `PROCEDURE DIVISION` for purposes of segmentation. Segment numbers can contain only the characters 0 through 9. A segment number can be expressed as either one or two digits.

*** procedure**
A paragraph or group of logically successive paragraphs, or a section or group of logically successive sections, within the `PROCEDURE DIVISION`.

*** procedure branching statement**
A statement that causes the explicit transfer of control to a statement other than the next executable statement in the sequence in which the statements are written in the source code. The procedure branching statements are: `ALTER`, `CALL`, `EXIT`, `EXIT PROGRAM`, `GO TO`, `MERGE` (with the `OUTPUT PROCEDURE` phrase), `PERFORM` and `SORT` (with the `INPUT PROCEDURE` or `OUTPUT PROCEDURE` phrase), `XML PARSE`.

`PROCEDURE DIVISION`
The COBOL division that contains instructions for solving a problem.

procedure integration
One of the functions of the COBOL optimizer is to simplify calls to performed procedures or contained programs.

`PERFORM` procedure integration is the process whereby a `PERFORM` statement is replaced by its performed procedures. Contained program procedure integration is the process where a call to a contained program is replaced by the program code.

*** procedure-name**
A user-defined word that is used to name a paragraph or section in the PROCEDURE DIVISION. It consists of a paragraph-name (which can be qualified) or a section-name.

procedure pointer
A data item in which a pointer to an entry point can be stored. A data item defined with the USAGE IS PROCEDURE-POINTER clause contains the address of a procedure entry point.

procedure-pointer data item
A data item in which a pointer to an entry point can be stored. A data item defined with the `USAGE IS PROCEDURE-POINTER` clause contains the address of a procedure entry point. Typically used to communicate with COBOL programs.

process
The course of events that occurs during the execution of all or part of a program. Multiple processes can run concurrently, and programs that run within a process can share resources.

program
(1) A sequence of instructions suitable for processing by a computer. Processing may include the use of a compiler to prepare the program for execution, as well as a runtime environment to execute it. (2) A logical assembly of one or more interrelated modules. Multiple copies of the same program can be run in different processes.

*** program identification entry**
In the `PROGRAM-ID` paragraph of the `IDENTIFICATION DIVISION`, an entry that contains clauses that specify the program-name and assign selected program attributes to the program.

program-name
In the `IDENTIFICATION DIVISION` and the end program marker, a user-defined word or an alphanumeric literal that identifies a COBOL source program.

project
The complete set of data and actions that are required to build a target, such as a dynamic link library (DLL) or other executable (EXE).

*** pseudo-text**
A sequence of text words, comment lines, or the separator space in a source program or COBOL library bounded by, but not including, pseudo-text delimiters.

*** pseudo-text delimiter**
Two contiguous equal sign characters (==) used to delimit pseudo-text.

*** punctuation character**
A character that belongs to the following set:

Character	Meaning
,	Comma
;	Semicolon
:	Colon
.	Period (full stop)
"	Quotation mark
(	Left parenthesis
)	Right parenthesis
	Space
=	Equal sign

Q

QSAM (Queued Sequential Access Method)
An extended version of the basic sequential access method (BSAM). When this method is used, a queue is formed of input data blocks that are awaiting processing or of output data blocks that have been processed and are awaiting transfer to auxiliary storage or to an output device.

QSAM file system
The QSAM (Queued Sequential Access Method) file system supports fixed, variable, and spanned records, and it enables you to directly access a QSAM file that you transferred (using z/OS FTP) from z/OS to AIX or Linux with the options `binary and quote site rdw`. A QSAM file supports all COBOL data types in the record.

*** qualified data-name**
An identifier that is composed of a data-name followed by one or more sets of either of the connectives `OF` and `IN` followed by a data-name qualifier.

*** qualifier**
(1) A data-name or a name associated with a level indicator that is used in a reference either together with another data-name (which is the name of an item that is subordinate to the qualifier) or together with a condition-name. (2) A section-name that is used in a reference together with a paragraph-name specified in that section. (3) A library-name that is used in a reference together with a text-name associated with that library.

R

*** random access**
An access mode in which the program-specified value of a key data item identifies the logical record that is obtained from, deleted from, or placed into a relative or indexed file.

*** record**
See *logical record*.

*** record area**
A storage area allocated for the purpose of processing the record described in a record description entry in the `FILE SECTION` of the `DATA DIVISION`. In the `FILE SECTION`, the current number of character positions in the record area is determined by the explicit or implicit `RECORD` clause.

*** record description**
See *record description entry*.

*** record description entry**
The total set of data description entries associated with a particular record. Synonymous with *record description*.

record key
A key whose contents identify a record within an indexed file.

record-key-name
A user-defined word that names a key associated with an indexed file.

*** record-name**
A user-defined word that names a record described in a record description entry in the `DATA DIVISION` of a COBOL program.

*** record number**
The ordinal number of a record in the file whose organization is sequential.

recording mode
The format of the logical records in a file. Recording mode can be F (fixed length), V (variable length), S (spanned), or U (undefined).

recursion
A program calling itself or being directly or indirectly called by one of its called programs.

recursively capable
A program is recursively capable (can be called recursively) if the `RECURSIVE` attribute is on the `PROGRAM-ID` statement.

reel
A discrete portion of a storage medium, the dimensions of which are determined by each implementor that contains part of a file, all of a file, or any number of files. Synonymous with *unit* and *volume*.

reentrant
The attribute of a program or routine that lets more than one user share a single copy of a load module.

*** reference format**
A format that provides a standard method for describing COBOL source programs.

reference modification
A method of defining a new category alphanumeric, category DBCS, or category national data item by specifying the leftmost character and length relative to the leftmost character position of a `USAGE DISPLAY`, `DISPLAY-1`, or `NATIONAL` data item.

*** reference-modifier**
A syntactically correct combination of character strings and separators that defines a unique data item. It includes a delimiting left parenthesis separator, the leftmost character position, a colon separator, optionally a length, and a delimiting right parenthesis separator.

*** relation**
See *relational operator* or *relation condition*.

*** relation character**
A character that belongs to the following set:

Character	Meaning
>	Greater than
<	Less than
=	Equal to

*** relation condition**
The proposition (for which a truth value can be determined) that the value of an arithmetic expression, data item, alphanumeric literal, or index-name has a specific relationship to the value of another arithmetic expression, data item, alphanumeric literal, or index name. See also *relational operator*.

*** relational operator**
A reserved word, a relation character, a group of consecutive reserved words, or a group of consecutive reserved words and relation characters used in the construction of a relation condition. The permissible operators and their meanings are:

Character	Meaning
`IS GREATER THAN`	Greater than
`IS >`	Greater than
`IS NOT GREATER THAN`	Not greater than
`IS NOT >`	Not greater than
`IS LESS THAN`	Less than
`IS <`	Less than
`IS NOT LESS THAN`	Not less than
`IS NOT <`	Not less than
`IS EQUAL TO`	Equal to
`IS =`	Equal to
`IS NOT EQUAL TO`	Not equal to
`IS NOT =`	Not equal to
`IS GREATER THAN OR EQUAL TO`	Greater than or equal to
`IS >=`	Greater than or equal to
`IS LESS THAN OR EQUAL TO`	Less than or equal to
`IS <=`	Less than or equal to

*** relative file**
A file with relative organization.

*** relative key**
A key whose contents identify a logical record in a relative file.

*** relative organization**
The permanent logical file structure in which each record is uniquely identified by an integer value greater than zero, which specifies the logical ordinal position of the record in the file.

*** relative record number**
The ordinal number of a record in a file whose organization is relative. This number is treated as a numeric literal that is an integer.

*** reserved word**
A COBOL word that is specified in the list of words that can be used in a COBOL source program, but that must not appear in the program as a user-defined word or system-name.

*** resource**
A facility or service, controlled by the operating system, that an executing program can use.

*** resultant identifier**
A user-defined data item that is to contain the result of an arithmetic operation.

routine
A set of statements in a COBOL program that causes the computer to perform an operation or series of related operations.

*** routine-name**
A user-defined word that identifies a procedure written in a language other than COBOL.

RSD file system
The record sequential delimited file system is a workstation file system that supports sequential files. An RSD file supports all COBOL data types in fixed or variable-length records, can be edited by most file editors, and can be read by programs written in other languages. This system only supports sequential files.

*** run time**
The time at which an object program is executed. Synonymous with *object time*.

runtime environment
The environment in which a COBOL program executes.

*** run unit**
A stand-alone object program, or several object programs, that interact by means of COBOL `CALL` statements and function at run time as an entity.

S

SBCS
See *single-byte character set (SBCS)*.

scope terminator
A COBOL reserved word that marks the end of certain `PROCEDURE DIVISION` statements.It can be either explicit (`END-ADD`, for example) or implicit (separator period).

*** section**
A set of zero, one, or more paragraphs or entities, called a section body, the first of which is preceded by a section header. Each section consists of the section header and the related section body.

*** section header**
A combination of words followed by a separator period that indicates the beginning of a section in any of these divisions: `ENVIRONMENT`, `DATA`, or `PROCEDURE`. In the `ENVIRONMENT DIVISION` and `DATA DIVISION`, a section header is composed of reserved words followed by a separator period. The permissible section headers in the `ENVIRONMENT DIVISION` are:

```
CONFIGURATION SECTION.
INPUT-OUTPUT SECTION.
```

The permissible section headers in the DATA DIVISION are:

```
FILE SECTION.
WORKING-STORAGE SECTION.
LOCAL-STORAGE SECTION.
LINKAGE SECTION.
```

In the PROCEDURE DIVISION, a section header is composed of a section-name, followed by the reserved word SECTION, followed by a separator period.

*** section-name**
A user-defined word that names a section in the PROCEDURE DIVISION.

segmentation

Refers to the 85 COBOL Standard segmentation module. This feature has been obsoleted and removed from subsequent COBOL Standard versions and is not supported in COBOL for Linux.

selection structure
A program processing logic in which one or another series of statements is executed, depending on whether a condition is true or false.

*** sentence**
A sequence of one or more statements, the last of which is terminated by a separator period.

*** separately compiled program**
A program that, together with its contained programs, is compiled separately from all other programs.

*** separator**
A character or two contiguous characters used to delimit character strings.

*** separator comma**
A comma (,) followed by a space used to delimit character strings.

*** separator period**
A period (.) followed by a space used to delimit character strings.

*** separator semicolon**
A semicolon (;) followed by a space used to delimit character strings.

sequence structure
A program processing logic in which a series of statements is executed in sequential order.

*** sequential access**
An access mode in which logical records are obtained from or placed into a file in a consecutive predecessor-to-successor logical record sequence determined by the order of records in the file.

*** sequential file**
A file with sequential organization.

*** sequential organization**
The permanent logical file structure in which a record is identified by a predecessor-successor relationship established when the record is placed into the file.

serial search
A search in which the members of a set are consecutively examined, beginning with the first member and ending with the last.

SFS file system
The CICS Structured File Server file system is a record-oriented file system that supports sequential, relative, and key-indexed file access.

shared library
A library created by the linker that contains at least one subroutine that can be used by multiple processes. Programs and subroutines are linked as usual, but the code common to different subroutines is combined in one library file that can be loaded at run time and shared by many programs. A key to identify the shared library file is in the header of each subroutine.

*** sign condition**
The proposition (for which a truth value can be determined) that the algebraic value of a data item or an arithmetic expression is either less than, greater than, or equal to zero.

signature
The name of an operation and its parameters.

*** simple condition**
Any single condition chosen from this set:

- Relation condition
- Class condition
- Condition-name condition
- Switch-status condition
- Sign condition

See also *condition* and *negated simple condition*.

single-byte character set (SBCS)
A set of characters in which each character is represented by a single byte. See also *ASCII* and *EBCDIC (Extended Binary-Coded Decimal Interchange Code)*.

slack bytes (within records)
Bytes inserted by the compiler between data items to ensure correct alignment of some elementary data items. Slack bytes contain no meaningful data. The SYNCHRONIZED clause instructs the compiler to insert slack bytes when they are needed for proper alignment.

slack bytes (between records)
Bytes inserted by the programmer between blocked logical records of a file, to ensure correct alignment of some elementary data items. In some cases, slack bytes between records improve performance for records processed in a buffer.

*** sort file**
A collection of records to be sorted by a SORT statement. The sort file is created and can be used by the sort function only.

*** sort-merge file description entry**
An entry in the `FILE SECTION` of the `DATA DIVISION` that is composed of the level indicator SD, followed by a file-name, and then followed by a set of file clauses as required.

*** `SOURCE-COMPUTER`**
The name of an `ENVIRONMENT DIVISION` paragraph in which the computer environment, where the source program is compiled, is described.

*** source computer entry**
An entry in the `SOURCE-COMPUTER` paragraph of the `ENVIRONMENT DIVISION`; this entry contains clauses that describe the computer environment in which the source program is to be compiled.

*** source item**
An identifier designated by a SOURCE clause that provides the value of a printable item.

source program
Although a source program can be represented by other forms and symbols, in this document the term always refers to a syntactically correct set of COBOL statements. A COBOL source program commences with the `IDENTIFICATION DIVISION` or a `COPY` statement and terminates with the end program marker, if specified, or with the absence of additional source program lines.

source unit
A unit of COBOL source code that can be separately compiled: a program. Also known as a *compilation unit*.

special character
A character that belongs to the following set:

Character	Meaning
+	Plus sign
-	Minus sign (hyphen)
*	Asterisk
/	Slant (forward slash)
=	Equal sign
$	Currency sign
,	Comma
;	Semicolon
.	Period (decimal point, full stop)
"	Quotation mark
'	Apostrophe
(	Left parenthesis
)	Right parenthesis
>	Greater than
<	Less than
:	Colon
_	Underscore

SPECIAL-NAMES
The name of an `ENVIRONMENT DIVISION` paragraph in which environment-names are related to user-specified mnemonic-names.

*** special names entry**
An entry in the `SPECIAL-NAMES` paragraph of the `ENVIRONMENT DIVISION`; this entry provides means for specifying the currency sign; choosing the decimal point; specifying symbolic characters; relating implementor-names to user-specified mnemonic-names; relating alphabet-names to character sets or collating sequences; and relating class-names to sets of characters.

*** special registers**
Certain compiler-generated storage areas whose primary use is to store information produced in conjunction with the use of a specific COBOL feature.

*** statement**
A syntactically valid combination of words, literals, and separators, beginning with a verb, written in a COBOL source program.

STL file system
The standard language file system is the native workstation file system for COBOL. This system supports sequential, relative, and indexed files.

structured programming
A technique for organizing and coding a computer program in which the program comprises a hierarchy of segments, each segment having a single entry point and a single exit point. Control is passed downward through the structure without unconditional branches to higher levels of the hierarchy.

*** subject of entry**
An operand or reserved word that appears immediately following the level indicator or the level-number in a `DATA DIVISION` entry.

*** subprogram**
See *called program*.

*** subscript**
An occurrence number that is represented by either an integer, a data-name optionally followed by an integer with the operator + or -, or an index-name optionally followed by an integer with the operator + or -, that identifies a particular element in a table. A subscript can be the word `ALL` when the subscripted identifier is used as a function argument for a function allowing a variable number of arguments.

*** subscripted data-name**
An identifier that is composed of a data-name followed by one or more subscripts enclosed in parentheses.

substitution character
A character that is used in a conversion from a source code page to a target code page to represent a character that is not defined in the target code page.

surrogate pair
In the UTF-16 format of Unicode, a pair of encoding units that together represents a single Unicode graphic character. The first unit of the pair is called a *high surrogate* and the second a *low surrogate*. The code value of a high surrogate is in the range X'D800' through X'DBFF'. The code value of a low surrogate is in the range X'DC00' through X'DFFF'. Surrogate pairs provide for more characters than the 65,536 characters that fit in the Unicode 16-bit coded character set.

switch-status condition
The proposition (for which a truth value can be determined) that an `UPSI` switch, capable of being set to an on or off status, has been set to a specific status.

*** symbolic-character**
A user-defined word that specifies a user-defined figurative constant.

syntax
(1) The relationship among characters or groups of characters, independent of their meanings or the manner of their interpretation and use. (2) The structure of expressions in a language. (3) The rules governing the structure of a language. (4) The relationship among symbols. (5) The rules for the construction of a statement.

SYSADATA
A file of additional compilation information that is produced if the `ADATA` compiler option is in effect.

SYSIN
The primary compiler input file or files.

SYSLIB
The secondary compiler input file or files, which are processed if the `LIB` compiler option is in effect.

SYSPRINT
The compiler listing file.

*** system-name**
A COBOL word that is used to communicate with the operating environment.

T

*** table**
A set of logically consecutive items of data that are defined in the `DATA DIVISION` by means of the `OCCURS` clause.

*** table element**
A data item that belongs to the set of repeated items comprising a table.

*** text-name**
A user-defined word that identifies library text.

*** text word**
A character or a sequence of contiguous characters between margin A and margin R in a COBOL library, source program, or pseudo-text that is any of the following characters:

- A separator, except for space; a pseudo-text delimiter; and the opening and closing delimiters for alphanumeric literals. The right parenthesis and left parenthesis characters, regardless of context within the library, source program, or pseudo-text, are always considered text words.
- A literal including, in the case of alphanumeric literals, the opening quotation mark and the closing quotation mark that bound the literal.
- Any other sequence of contiguous COBOL characters except comment lines and the word COPY bounded by separators that are neither a separator nor a literal.

thread
A stream of computer instructions (initiated by an application within a process) that is in control of a process.

token
In the COBOL editor, a unit of meaning in a program. A token can contain data, a language keyword, an identifier, or other part of the language syntax.

top-down design
The design of a computer program using a hierarchic structure in which related functions are performed at each level of the structure.

top-down development
See *structured programming*.

trailer-label
(1) A label that follows the data records on a unit of recording medium. (2) Synonym for *end-of-file label*.

troubleshoot
To detect, locate, and eliminate problems in using computer software.

*** truth value**
The representation of the result of the evaluation of a condition in terms of one of two values: true or false.

U

*** unary operator**
A plus (+) or a minus (-) sign that precedes a variable or a left parenthesis in an arithmetic expression and that has the effect of multiplying the expression by +1 or -1, respectively.

Unicode
A universal character encoding standard that supports the interchange, processing, and display of text that is written in any of the languages of the modern world. There are multiple encoding schemes to represent Unicode, including UTF-8, UTF-16, and UTF-32. COBOL for Linux supports Unicode using UTF-16 in little-endian format as the representation for the national data type.

Uniform Resource Identifier (URI)
A sequence of characters that uniquely names a resource; in COBOL for Linux, the identifier of a namespace. URI syntax is defined by the document *Uniform Resource Identifier (URI): Generic Syntax*.

unit
A module of direct access, the dimensions of which are determined by IBM.

*** unsuccessful execution**
The attempted execution of a statement that does not result in the execution of all the operations specified by that statement. The unsuccessful execution of a statement does not affect any data referenced by that statement, but can affect status indicators.

UPSI switch
A program switch that performs the functions of a hardware switch. Eight are provided: UPSI-0 through UPSI-7.

URI
See *Uniform Resource Identifier (URI)*.

*** user-defined word**
A COBOL word that must be supplied by the user to satisfy the format of a clause or statement.

V

*** variable**
A data item whose value can be changed by execution of the object program. A variable used in an arithmetic expression must be a numeric elementary item.

variable-length item
A group item that contains a table described with the `DEPENDING` phrase of the `OCCURS` clause.

*** variable-length record**
A record associated with a file whose file description or sort-merge description entry permits records to contain a varying number of character positions.

*** variable-occurrence data item**
A variable-occurrence data item is a table element that is repeated a variable number of times. Such an item must contain an `OCCURS DEPENDING ON` clause in its data description entry or be subordinate to such an item.

*** variably located group**
A group item following, and not subordinate to, a variable-length table in the same record. The group item can be an alphanumeric group or a national group.

*** variably located item**
A data item following, and not subordinate to, a variable-length table in the same record.

*** verb**
A word that expresses an action to be taken by a COBOL compiler or object program.

volume
A module of external storage. For tape devices it is a reel; for direct-access devices it is a unit.

VSAM file system
A file system that supports COBOL sequential, relative, and indexed organizations.

VSAM
A generic term for the *STL file system* or *SFS file system*.

W

web service
A modular application that performs specific tasks and is accessible through open protocols like HTTP and SOAP.

white space
Characters that introduce space into a document. They are:

- Space
- Horizontal tabulation
- Carriage return
- Line feed
- Next line

as named in the Unicode Standard.

windowed date field
A date field containing a windowed (two-digit) year. See also *date field* and *windowed year*.

windowed year
A date field that consists only of a two-digit year. This two-digit year can be interpreted using a century window. For example, 10 could be interpreted as 2010. See also *century window*. Compare with *expanded year*.

*** word**
A character string of not more than 30 characters that forms a user-defined word, a system-name, a reserved word, or a function-name.

*** WORKING-STORAGE SECTION**
The section of the DATA DIVISION that describes WORKING-STORAGE data items, composed either of noncontiguous items or WORKING-STORAGE records or of both.

workstation
A generic term for computers, including personal computers, 3270 terminals, intelligent workstations, and UNIX terminals. Often a workstation is connected to a mainframe or to a network.

wrapper
An object that provides an interface between object-oriented code and procedure-oriented code. Using wrappers lets programs be reused and accessed by other systems.

X

x
The symbol in a PICTURE clause that can hold any character in the character set of the computer.

XML
Extensible Markup Language. A standard metalanguage for defining markup languages that was derived from and is a subset of SGML. XML omits the more complex and less-used parts of SGML and makes it much easier to write applications to handle document types, author and manage structured information, and transmit and share structured information across diverse computing systems. The use of XML does not require the robust applications and processing that is necessary for SGML. XML is developed under the auspices of the World Wide Web Consortium (W3C).

XML data
Data that is organized into a hierarchical structure with XML elements. The data definitions are defined in XML element type declarations.

XML declaration
XML text that specifies characteristics of the XML document such as the version of XML being used and the encoding of the document.

XML document
A data object that is well formed as defined by the W3C XML specification.

XML namespace
A mechanism, defined by the W3C XML Namespace specifications, that limits the scope of a collection of element names and attribute names. A uniquely chosen XML namespace ensures the unique identity of an element name or attribute name across multiple XML documents or multiple contexts within an XML document.

Y

year field expansion
Explicit expansion of date fields that contain two-digit years to contain four-digit years in files and databases, and then use of these fields in expanded form in programs. This is the only method for assuring reliable date processing for applications that have used two-digit years.

Z

zoned decimal data item
An external decimal data item that is described implicitly or explicitly as USAGE DISPLAY and that contains a valid combination of PICTURE symbols 9, S, P, and V. The content of a zoned decimal data item is represented in characters 0 through 9, optionally with a sign. If the PICTURE string specifies a sign and the SIGN IS SEPARATE clause is specified, the sign is represented as characters + or -. If SIGN IS SEPARATE is not specified, the sign is one hexadecimal digit that overlays the first 4 bits of the sign position (leading or trailing).

#

77-level-description-entry
A data description entry that describes a noncontiguous data item that has level-number 77.

85 COBOL Standard
The COBOL language defined by the following standards:

- *ANSI INCITS 23-1985, Programming languages - COBOL*, as amended by *ANSI INCITS 23a-1989, Programming Languages - COBOL - Intrinsic Function Module for COBOL*
- *ISO 1989:1985, Programming languages - COBOL*, as amended by *ISO/IEC 1989/AMD1:1992, Programming languages - COBOL: Intrinsic function module*

2002 COBOL Standard

The COBOL language defined by the following standard:

- *INCITS/ISO/IEC 1989-2002, Information technology - Programming languages - COBOL*

2014 COBOL Standard

The COBOL language defined by the following standard:

- *INCITS/ISO/IEC 1989:2014, Information technology - Programming languages, their environments and system software interfaces - Programming language COBOL*

List of resources

COBOL for Linux publications

What's new in COBOL for Linux on x86 1.2, SC28-3453-00

Installation Guide, GC28-3116-01

Language Reference, SC28-3117-01

Programming Guide, SC28-3118-01

Migration Guide, SC28-3454-00

Support

If you have a problem using COBOL for Linux, visit the IBM Support website, which provides up-to-date support information.

Related publications

DB2® for Linux, UNIX, and Windows

You can find the following publications in the IBM Documentation:

- *Command Reference*
- *Database Administration Concepts and Configuration Reference*
- *SQL reference for Db2 Version 11.1 for Linux, UNIX, and Windows*

TXSeries® for Multiplatforms

- *IBM TXSeries for Multiplatforms documentation*

IBM CICS TX

Note: Effective 9 August 2024, IBM withdraws from marketing IBM CICS TX Standard (5900-ALU) and IBM CICS TX Advanced (5737-K69).

- *IBM CICS TX documentation*

Unicode and character representation

- *Unicode*
- *International Components for Unicode: Converter Explorer*
- *Character Data Representation Architecture: Reference and Registry*

XML

- *Extensible Markup Language (XML)*
- *Namespaces in XML 1.0*
- *Namespaces in XML 1.1*
- *XML specification*

© Copyright IBM Corp. 2021, 2025

Index

Special Characters

- (minus)
    insertion character 199, 200
    SIGN clause 209
    symbol in PICTURE clause 190
, (comma)
    insertion character 198
    symbol in PICTURE clause 186, 190
: (colon)
    description 40
    file concatenation 116
    required use of 570
(/ or *>) comment line 50
(period) symbol in PICTURE clause 186
* symbol in PICTURE clause 186
*> (floating comment indicator) 50
*CBL (*CONTROL) statement 562
*CONTROL (*CBL) statement 562
/ (slash)
    insertion character 198
    symbol in PICTURE clause 190
+ (plus)
    insertion character 199, 200, 202
    SIGN clause 209
    symbol in PICTURE clause 190
< (less than) 245
<= (less than or equal to) 245
= (equal) 245
> (greater than) 245
>= (greater than or equal to) 245
>> (compiler directive indicator)
    CALLINTERFACE directive 585
    compiler directive 585
    DEFINE directive 588
    EVALUATE directive 589
    IF directive 591
$ (default currency symbol)
    in PICTURE clause 190
    insertion character 199, 200
    symbol in PICTURE clause 186

Numerics

0
    insertion character 198
    symbol in PICTURE clause 190
0 symbol in PICTURE clause 186
66, RENAMES data description entry 206
66, renames level-number 140
77, elementary item level-number 140
88, condition-name data description entry 162
88, conditional variable level number 140
9 symbol in PICTURE clause 186
9, symbol in PICTURE clause 190

A

A symbol in PICTURE clause 184
abbreviated combined relation condition
    examples 262
    using parentheses in 260
ACCEPT statement
    description and format 279
    FROM phrase 279
    mnemonic-name in 279
    overlapping operands, unpredictable results 271
    system information transfer 280
access mode
    description 121
    dynamic
        DELETE statement 298
        description 122
        READ statement 358
    DYNAMIC 122
    random
        DELETE statement 298
        description 122
        READ statement 357
    RANDOM 121
    sequential
        DELETE statement 297
        description 122
        READ statement 355
    SEQUENTIAL 121
ACCESS MODE clause 121
accessibility
    keyboard navigation xxi
    of this information xxi
ACOS function 439
ADD statement
    common phrases 267
    CORRESPONDING phrase 285
    description and format 283
    END-ADD phrase 285
    GIVING phrase 283
    NOT ON SIZE ERROR phrase 285
    ON SIZE ERROR phrase 285
    ROUNDED phrase 285
ADD-DURATION function 441
ADDRESS OF special register 18
ADVANCING phrase 403
AFTER phrase
    INSPECT statement 323
    PERFORM statement 346
    with REPLACING 319
    with TALLYING 318
    WRITE statement 404
alignment rules 146
ALL literal
    figurative constant 16
    STOP statement 387
    STRING statement 388

ALL phrase
INSPECT statement 318, 319
SEARCH statement 367
UNSTRING statement 397
ALL subscripting 63, 430
ALPHABET clause 99
alphabet-name
description 99
MERGE statement 327
PROGRAM COLLATING SEQUENCE clause 95
SORT statement 382
alphabetic category 143
alphabetic character in ACCEPT 279
ALPHABETIC class test 241
alphabetic function arguments 428
alphabetic items
alignment rules 146
elementary move rules 331
how to define 191
PICTURE clause 191
ALPHABETIC-LOWER class test 241
ALPHABETIC-UPPER class test 241
alphanumeric category 143
alphanumeric comparisons 249, 250
alphanumeric function arguments 428
alphanumeric functions 426
alphanumeric group items 140
alphanumeric items
alignment rules 146
elementary move rules 331
how to define 192
PICTURE clause 192
alphanumeric literals
control character restrictions 30, 31
in hexadecimal notation 30
alphanumeric operands, comparing 249, 250
alphanumeric-edited category 144
alphanumeric-edited items
alignment rules 146
elementary move rules 331
how to define 192
PICTURE clause 192
ALSO phrase
ALPHABET clause 99
EVALUATE statement 305
ALTER statement
description and format 285
GO TO statement and 311
altered GO TO statement 311
alternate key data item 125
ALTERNATE RECORD KEY clause
DUPLICATES phrase 126
AND logical operator 256
ANNUITY function 443
ANSI COBOL standards 637
APPLY WRITE-ONLY clause 131
Area A (cols. 8-11) 46
Area B (cols. 12-72 in fixed source format, or cols 12-252 in extended source format) 47
arguments 428
arithmetic expression
COMPUTE statement 295
description 235
EVALUATE statement 306
arithmetic expression *(continued)*
relation condition 244
arithmetic operators
description 236
permissible symbol pairs 237
arithmetic statements
ADD 283
common phrases 267
COMPUTE 295
DIVIDE 300
list of 270
multiple results 271
MULTIPLY 336
operands 270
programming notes 271
SUBTRACT 392
ASCENDING KEY phrase
collating sequence 179
description 325
MERGE statement 325
OCCURS clause 178
SORT statement 378, 380
ASCII
collating sequence 614
specifying in SPECIAL-NAMES paragraph 99
ASCII standard 637
ASIN function 445
ASSIGN clause
description 112
format 108
SELECT clause and 112
assigning index values 369
assignment-name
ASSIGN clause 112
RECORD DELIMITER clause 120
RERUN clause 129
asterisk (*)
comment line 50
insertion character 202
AT END phrase
READ statement 354
RETURN statement 360
SEARCH statement 364
SEARCH statement (binary search) 367
SEARCH statement (serial search) 364
AT END-OF-PAGE phrases 404
at-end condition
READ statement 357
RETURN statement 360
ATAN function 447
ATTRIBUTES phrase 411
AUTHOR paragraph
description 89
format 85

B

B
insertion character 198
basic character set 3
basic PERFORM statement
format and description 343
BASIS statement 561
basis-name 54

batch compile 79
BEFORE phrase
INSPECT statement 323
PERFORM statement 346
with REPLACING 319
with TALLYING 318
WRITE statement 404
Bibliography 683
big-endian 7
binary arithmetic operators 236
binary data item, DISPLAY statement 299
BINARY phrase in USAGE clause 217
binary search 367
blank lines 51
BLANK WHEN ZERO clause
description and format 165
INDEX phrase in USAGE clause 220
BLOCK CONTAINS clause
description 155
format 149
boolean
elementary move rules 332
boolean category 144
boolean conditions
description 594
boolean data
definition 162
boolean Data
format 162
boolean function arguments 428
boolean functions 426
boolean items
how to define 191
PICTURE clause 191
boolean Literal 32
Boolean Literal
description 144
branching
GO TO statement 310
out-of-line PERFORM statement 343
BY CONTENT phrase
CALL statement 288
BY REFERENCE phrase
CALL statement 288
BY VALUE phrase
CALL statement 289

C

C01-C012 environment names 403
call convention 585
CALL statement
CANCEL statement and 292
description and format 286
LINKAGE SECTION 233
ON OVERFLOW phrase 286
PROCEDURE DIVISION header 232, 233
program termination 286
subprogram linkage 286
transfer of control 71
USING phrase 233
called and calling programs, description 286
CALLINTERFACE directive 585
CANCEL statement 292
category
of group items 140
relationship to classes of data 141
relationship to usages of data 141
category descriptions 143
category of data
alphabetic 143, 191
alphanumeric 143, 192
alphanumeric-edited 144, 192
boolean 144, 191
date 144
DBCS 144, 192
external floating-point 144
internal floating-point 144
national 145, 194
national-edited 145, 195
numeric 145, 196
numeric-edited 145, 197
time 144
timestamp 144
category of functions 142
category of literals 143
CBL (PROCESS) statement 562
century window (See also date field)
definition 75
CHAR compiler option 7
CHAR function 449
character code set, specifying 99
character encoding unit 7
character sets 7
character-strings
COBOL words 11
representation in PICTURE clause 190
size determination 146
CHARACTERS BY phrase 319
CHARACTERS phrase
BLOCK CONTAINS clause 155
INSPECT statement 318
MEMORY SIZE clause 95
USAGE clause and 155
characters, valid in COBOL program 3
checkpoint processing, RERUN clause 129
class (of data)
of data items 141
of figurative constants 141
of functions 141
of group items 140
of literals 141
CLASS clause 100
class condition 240
class definition
class procedure division 231
configuration section 93
requirements for indexed tables 180
class procedure division 231
class-name 13, 14, 54
class-name class test 241
clauses
definition 44
syntactical hierarchy 43
CLOSE statement
format and description 293
COBOL
language structure 3

COBOL *(continued)*
program structure 77
reference format
extended source format 45
fixed source format 45
COBOL standards 637
COBOL words
with DBCS characters 11
with multi-byte characters 11
with single-byte characters 11
code page names 7
code pages 7
CODE-SET clause
ALPHABET clause and 99
description 160
format 149
collating sequence
ASCENDING/DESCENDING KEY phrase and 179
ASCII 614
EBCDIC 611
locale definition 635
specified in OBJECT-COMPUTER paragraph 94
specified in SPECIAL-NAMES paragraph 99
COLLATING SEQUENCE phrase
ALPHABET clause 99
MERGE statement 327
SORT statement 382
colon character
description 40
required use of 570
column 7
indicator area 48
specifying comments 50
combined condition
description 258
evaluation rules 259
logical operators and evaluation results 259
order of evaluation 259
permissible element sequences 258
comma (,)
DECIMAL-POINT IS COMMA clause 102
insertion character 198
comment lines
description 50
in IDENTIFICATION DIVISION 89
in library text 565, 568
in source text 578
comments
sending xxii
COMMON clause 87
common processing facilities 272
COMP-1 through COMP-5 data items 218
comparison tables 245
comparison types 245
comparisons
alphanumeric operands 249, 250
cycle, INSPECT statement 323
date field 253
date-time operands 250
DBCS operands 250
function pointer operands 255
group operands 252
in EVALUATE statement 307
index data items 252
comparisons *(continued)*
index-names 252
national operands 250
numeric operands 251
procedure pointer operands 255
rules for COPY statement 567
compatible date field (See also date field)
definition 74
compile-time arithmetic expressions
description 595
compiler directive 585
compiler options
CHAR 7
controlling listing output 562
DATEPROC 73
NUMPROC 255
PGMNAME 292
specifying 562
THREAD 180
TRUNC 147
compiler-directing statements
*CBL (*CONTROL) 562
*CONTROL (*CBL) 562
BASIS 561
CBL (PROCESS) 562
COPY 564
DELETE 573
EJECT 574
ENTER 574
INSERT 574
PROCESS (CBL) 562
READY TRACE 575
REPLACE 575
RESET TRACE 575
SERVICE LABEL 579
SERVICE RELOAD 579
SKIP1 580
SKIP2 580
SKIP3 580
TITLE 580
USE 581
complex conditions
abbreviated combined relation 260
combined condition 258
description 256
negated simple 257
complex OCCURS DEPENDING ON (CODO) 182
composite of operands 270
COMPUTATIONAL data items 217
COMPUTATIONAL phrases in USAGE clause 218
COMPUTE statement
common phrases 268
description and format 295
computer-name 14, 93, 94
concatenation of files 116
condition
abbreviated combined relation 260
class 240
combined 258
complex 256
condition-name 242
EVALUATE statement 306
IF statement 312
negated simple 257

condition *(continued)*
PERFORM UNTIL statement 347
relation 244
SEARCH statement (binary search) 367
SEARCH statement (serial search) 366
sign 255
simple 240
switch-status 256
condition-name
and conditional variable 162
description and format 242
rules for values 226
SEARCH statement 368
SET statement 371
SPECIAL-NAMES paragraph 98
switch status condition 98
conditional compilation
description 587
directives
DEFINE directive 588
EVALUATE directive 589
IF directive 591
examples 592
predefined compilation variables 595
conditional expressions
boolean conditions 594
compile-time arithmetic expressions 595
constant conditional expressions 593
date-time operands 250
DBCS operands 250
defined condition expressions 594
description 240
index-names and index data items 252
order of evaluation of operands 259
parentheses in abbreviated combined relation conditions 260
conditional statements
description 264
GO TO statement 310
IF statement 312
list of 264
PERFORM statement 346
conditional variable 162
configuration section
description (programs, classes, methods) 93
SOURCE-COMPUTER paragraph 93
SPECIAL-NAMES paragraph 95
conformance rules
SET...USAGE OBJECT REFERENCE 374
CONSTANT clause 164
constant conditional expressions
description 593
contained programs 77
context-sensitive word 635
continuation
area 46
lines 48, 50
CONTINUE statement 297
CONTROL statement (*CONTROL) 562
conversion of data, DISPLAY statement 298
CONVERT-DATE-TIME function 451
CONVERTING phrase 321
COPY libraries 58
COPY statement
COPY statement *(continued)*
comparison rules 567
description and format 564
example 569
replacement rules 567
REPLACING phrase 566
SUPPRESS option 566
CORRESPONDING (CORR) phrase
ADD statement 285
description 285
MOVE statement 329
SUBTRACT statement 393
with ON SIZE ERROR phrase 270
COS function 453
COUNT IN phrase
UNSTRING statement 397
XML GENERATE statement 410
CR (credit)
insertion character 199
symbol in PICTURE clause 186
CURRENCY SIGN clause
description 101
Euro currency sign 101
currency sign value 101
currency symbol
in PICTURE clause 186
specifying in CURRENCY SIGN clause 101
currency symbol, default ($) 199
CURRENT-DATE function 455
customer support 683

D

data
alignment 146
categories 141, 190
classes 141
hierarchies used in qualification 138
organization 118
signed 147
truncation of 147, 174
data category
alphabetic 191
alphanumeric 192
alphanumeric-edited 192
boolean 191
DBCS 192
national 194
national-edited 195
numeric 196
numeric-edited 197
data category descriptions 143
data conversion, DISPLAY statement 299
data description entry
BLANK WHEN ZERO clause 165
data-name 164
DATE FORMAT clause 166
FILLER phrase 165
floating-point usage 176
FORMAT clause 170, 172
GLOBAL clause 172
indentation and 140
JUSTIFIED clause 174
level-66 format (previously defined items) 162

data description entry *(continued)*
level-88 format (condition-names) 162
level-number description 164
LOCALE phrase 172
OCCURS clause 177
OCCURS DEPENDING ON (ODO) clause
format 180
PICTURE clause 182
REDEFINES clause 203
RENAMES clause 206
SIGN clause 208
SYNCHRONIZED clause 209
TYPE clause 214
TYPEDEF clause 215
USAGE clause 216
USAGE IS NATIONAL clause and 174
VALUE clause 223
data division
file description (FD) entry 154
levels of data 138
LINKAGE SECTION 137
LOCAL-STORAGE SECTION 137
sort description (SD) entry 154
WORKING-STORAGE SECTION
136
DATA DIVISION
data description entry 161
data relationships 138
in factory definition 135
in method definition 135
in object definition 135
in program definition 135
DATA DIVISION names 58
data flow
STRING statement 390
UNSTRING statement 399
data item
characteristics 161
description entry definition 136
EXTERNAL clause 170
data item description entry 136
data items
categories 141
classes 141
data manipulation statements
ACCEPT 279
INITIALIZE 313
list of 272
MOVE 329
overlapping operands 272
READ 352
RELEASE 358
RETURN 359
REWRITE 360
SET 369
STRING 387
UNSTRING 395
WRITE 401
data organization
access modes and 123
indexed 118
line-sequential 118
relative 118
sequential 118
DATA RECORDS clause
description 158
format 149
data relationships
DATA DIVISION 138
data transfer 279
data types
TYPE clause 214
TYPEDEF clause 215
data units
file data 137
overview 137
program data 138
data-item-description-entry
LINKAGE SECTION 137
data-name
data description entry 164
definition 53
DATE 102, 170, 281
date category 144
date field
addition 238
arithmetic 237
compatible 74
DATE FORMAT clause 166
DATEPROC compiler option 73
DATEVAL function 461
definition 74
expansion of windowed date fields before use 166
group items that are date fields 168
in relation conditions 253
in sign conditions 256
MOVE statement, behavior in 334
nondate 75
purpose 73
restrictions 167
size errors 239, 269
storing arithmetic results 239
subtraction 238
UNDATE function 545
windowed date field conditional variables 243
date field comparisons 253
date format (See also DATE FORMAT clause)
definition 74
DATE FORMAT clause
combining with other clauses 167
date functions 433
DATE YYYYMMDD 281
DATE-COMPILED paragraph
description 89
format 85
DATE-OF-INTEGER function 457
Date-Time
elementary move rules 332
date-time comparisons 250
date-time data types
ADD-DURATION function 441
alignment rules 146
conversion specifiers 103
CONVERT-DATE-TIME 451
FORMAT clause 102, 170
FORMAT OF special register 19
LC_TIME locale category 375
LIKE clause and 175

date-time data types *(continued)*
LOCALE phrase 104, 172
PICTURE clause usage 172
SIZE phrase 104, 172
SUBTRACT-DURATION 531
date-time function arguments 428
date-time functions 426
DATE-TO-YYYYMMDD function 459
DATE-WRITTEN paragraph
description 89
format 85
DATEPROC compiler option 73
DATEVAL function 461
DAY 281
DAY YYYYDDD 281
DAY-OF-INTEGER function 463
DAY-OF-WEEK 282
DAY-TO-YYYYDDD function 465
DB (debit)
insertion character 199
symbol in PICTURE clause 186
Db2 file system
FILE STATUS clause 128
DBCS (Double-Byte Character Set)
elementary move rules 332
using in comments 89
DBCS category 144
DBCS character set 3
DBCS characters
in COBOL words 12
DBCS class condition 241
DBCS comparisons 250
DBCS function arguments 428
DBCS functions 426
DBCS items
alignment rules 146
how to define 192
in ACCEPT 279
PICTURE clause 192
DBCS literals
in ACCEPT 279
SOSI compiler option 32
DBCS notation 610
de-editing 333
DEBUG-CONTENTS 19
DEBUG-ITEM special register 18, 618
DEBUG-LINE 19
DEBUG-NAME 19
debugging 617
DEBUGGING declarative 581, 583
debugging lines 51, 93, 618
debugging mode
compile-time switch 618
object-time switch 619
DEBUGGING MODE clause 93, 583, 617, 618
debugging sections 618
decimal point (.) 268
DECIMAL-POINT IS COMMA clause
description 102
NUMVAL function 505
NUMVAL-C function 507
declarative procedures
description and format 234
PERFORM statement 343
declarative procedures *(continued)*
USE statement 234
declaratives
DEBUGGING 583
EXCEPTION/ERROR 581
precedence rules for nested programs 582
DECLARATIVES key word
begin in Area A 47
description 234
declaratives section 234
DEFINE directive 588
defined condition expressions
description 594
DELETE statement
description and format 573
dynamic access 298
format and description 297
INVALID KEY phrase 298
random access 298
sequential access 297
DELIMITED BY phrase
STRING 388
UNSTRING statement 396
delimited scope statement 266
delimiter
INSPECT statement 320
UNSTRING statement 396
DELIMITER IN phrase, UNSTRING statement 397
DEPENDING phrase
GO TO statement 310
OCCURS clause 180
DESCENDING KEY phrase
collating sequence 179
description 325
MERGE statement 325
SORT statement 378, 380
display floating-point 193
DISPLAY phrase in USAGE clause 219
DISPLAY statement
description and format 298
DISPLAY-OF function 467
DIVIDE statement
common phrases 268
description and format 300
REMAINDER phrase 303
division header
format, ENVIRONMENT DIVISION 93
format, IDENTIFICATION DIVISION 85
format, PROCEDURE DIVISION 232
specification of 46
DO-UNTIL structure, PERFORM statement 346
DO-WHILE structure, PERFORM statement 346
Double-Byte Character Set (DBCS)
PICTURE clause and 192
using in comments 89
DOWN BY phrase, SET statement 370, 374
DUPLICATES phrase
SORT statement 381
dynamic access mode
data organization and 123
DELETE statement 298
description 122
READ statement 358

E

E symbol in PICTURE clause 185
EBCDIC
  code page 1140 611
  CODE-SET clause and 160
  collating sequence 611
  specifying in SPECIAL-NAMES paragraph 99
EBCDIC_CODEPAGE environment variable 7
editing
  fixed insertion 199
  floating insertion 200
  replacement 202
  signs 147
  simple insertion 198
  special insertion 199
  suppression 202
editing sign control symbol 186
editing signs 147
EGCS 313
eject page 50
EJECT statement 574
elementary items
  alignment rules 146
  basic subdivisions of a record 138
  MOVE statement 330
  size determination in program 146
  size determination in storage 146
elementary move rules 330
ELSE NEXT SENTENCE phrase 312
ENCODING phrase
  XML GENERATE statement 410
encoding units 7
end class marker 47
END DECLARATIVES key word 234
end markers 47
end method marker 47
END PROGRAM 79
end program marker 47
END-ADD phrase 285
END-CALL phrase 291
END-IF phrase 312
end-of-file processing 293
END-OF-PAGE phrases 404
END-PERFORM phrase 342
END-SUBSTRACT phrase 394
END-WRITE phrase 405
END-XML phrase
  XML GENERATE statement 414
  XML PARSE statement 420
entries
  definition 44
  syntactical hierarchy 43
ENTRY statement
  description and format 303
  subprogram linkage 303
environment division
  configuration section
    ALPHABET clause 99
    CURRENCY SIGN clause 101
    OBJECT-COMPUTER paragraph 94
    SPECIAL-NAMES paragraph 100
    SYMBOLIC CHARACTERS clause 105
ENVIRONMENT DIVISION
ENVIRONMENT DIVISION *(continued)*
  configuration section
    SOURCE-COMPUTER paragraph 93
    SPECIAL-NAMES paragraph 95
  input-output section
    FILE-CONTROL paragraph 107
environment names with WRITE ADVANCING 403
environment variables
  in ACCEPT statement 279
  in DISPLAY statement 298
environment-name
  SPECIAL-NAMES paragraph 97, 98
EOP phrases 404
equal sign (=) 244
EQUAL TO relational operator 244
EUC 7
Euro currency sign
  specifying in CURRENCY SIGN clause 101
EVALUATE directive 589
EVALUATE statement
  comparing operands 307
  determining truth value 306
  format and description 304
evaluation rules
  combined conditions 259
  EVALUATE statement 307
  nested IF statement 313
EXCEPTION/ERROR declarative
  CLOSE statement 294
  DELETE statement 298
  description and format 581
execution flow
  ALTER statement 285
  basic PERFORM statement 343
  PERFORM statement 342
EXIT PARAGRAPH statement
  format and description 309
EXIT PERFORM statement
  format and description 308
EXIT PROGRAM statement
  format and description 308
EXIT SECTION statement
  format and description 309
EXIT statement
  format and description 307
  PERFORM statement 343
expanded date field (See also date field)
  definition 74
expanded year (See also date field)
  definition 74
expansion of windowed date fields before use 166
explicit attributes, of data 70
explicit scope terminators 266
exponentiation
  exponential expression 236
expression, arithmetic 235
EXTEND phrase
  OPEN statement 339
extended character set 3
extension language elements 597
EXTERNAL clause
  with data item 170
  with file name 154
external decimal item

external decimal item *(continued)*
DISPLAY statement 298
external floating-point
DISPLAY statement 299
external floating-point category 144
external floating-point in ACCEPT 279
external floating-point items
alignment rules 146
how to define 193
PICTURE clause 193
external-class-name 14
EXTRACT-DATE-TIME function 469

F

FACTORIAL function 471
factory data division
format 135
factory WORKING-STORAGE 136
FALSE phrase 306
FD (file description) entry
BLOCK CONTAINS clause 155
DATA RECORDS clause 158
description 154
format 149
GLOBAL clause 155
LABEL RECORDS clause 158
level indicator 138
VALUE OF clause 158
feedback
sending xxii
figurative constant
DISPLAY statement 299
STOP statement 387
STRING statement 388
figurative constants
ALL literal 16
HIGH-VALUE 15
HIGH-VALUES 15
LOW-VALUE 15
LOW-VALUES 15
NULL 16
NULLS 16
QUOTE 16
QUOTES 16
SPACE 15
SPACES 15
symbolic-character 16
ZERO 15
ZEROES 15
ZEROS 15
file
definition 137
labels 158
file concatenation 116
file organization
and access modes 122
definition 122
LINAGE clause 159
line-sequential 118
types of 118
file position indicator
description 278
READ statement 356
file section
RECORD clause 156
FILE SECTION
EXTERNAL clause 154
FILE STATUS clause
DELETE statement and 297
description 127
FILE STATUS clause 128
file status key 272
format 108
INVALID KEY phrase and 277
file status key
common processing facility 272
value and meaning 272
FILE-CONTROL paragraph
ASSIGN clause 112
description and format 107
FILE STATUS clause 127
ORGANIZATION clause 117
PADDING CHARACTER clause 120
RECORD KEY clause 123
RELATIVE KEY clause 127
RESERVE clause 117
SELECT clause 112
file-description-entry 136
file-name 53
file-name, specifying on SELECT clause 112
FILLER phrase
CORRESPONDING phrase 164
data description entry 164
FIND-DURATION function 473
fixed insertion editing 199
fixed-length
records 155
floating comment indicator (*>)
comment lines 50
description 50
inline comment 50
floating comment indicators 15
floating comment indicators (*>) 658
floating insertion editing 200
floating-point
DISPLAY statement 299
floating-point literals 34
FOOTING phrase of LINAGE clause 159
FOR REMOVAL phrase 293, 294
FORMAT clause
data description entry context 170, 172
LOCALE phrase 104
SIZE phrase 104, 172
SPECIAL-NAMES context 102
format notation, rules for xix
FORMAT OF special register 19
FROM phrase
ACCEPT statement 279
REWRITE statement 361
SUBTRACT statement 392
with identifier 277
WRITE statement 403
function arguments 428
function definitions 433
function pointer
in SET statement 369
function pointer data items

function pointer data items *(continued)*
relation condition 255
function type 426
function-identifier 68
function-names 14
function-pointer data items
SET statement 373
FUNCTION-POINTER phrase in USAGE clause 220
functions
arguments 428
categories 142
class and category of 141
classes 142
description 423
rules for usage 426
types of functions 426

G

G symbol in PICTURE clause 185
GIVING phrase
ADD statement 283
arithmetic 268
CALL statement 290
DIVIDE statement 303
MERGE statement 328
MULTIPLY statement 336
PROCEDURE DIVISION header 233
SORT statement 383
SUBTRACT statement 393
GLOBAL clause
with data item 172
with file name 155
Glossary 643
GO TO statement
altered 311
conditional 310
format and description 310
SEARCH statement 364, 368
unconditional 310
GO TO, DEPENDING ON phrase 285
GOBACK statement 309
graphic character 7
GREATER THAN OR EQUAL TO symbol (>=) 244
GREATER THAN symbol (>) 244
group comparisons 252
group items
alphanumeric 140
class and category of 140
description 138
MOVE statement 335
national 141, 173
usage of 140
group move rules 335
GROUP-USAGE clause
description 173
format 173
GROUP-USAGE NATIONAL clause 173
groups
categories 141
classes 141

H

halting execution 387
hexadecimal notation
for alphanumeric literals 30
for national literals 35
hierarchy of data 138
HIGH-VALUE figurative constant 15, 99
HIGH-VALUES figurative constant 15, 99
hyphen (-), in indicator area 48

I

I-O-CONTROL paragraph
APPLY WRITE-ONLY clause 131
checkpoint processing in 129
description 107, 128
MULTIPLE FILE TAPE clause 131
order of entries 128
RERUN clause 129
SAME AREA clause 130
SAME RECORD AREA clause 130
SAME SORT AREA clause 131
SAME SORT-MERGE AREA clause 131
IBM extensions xxi, 597
IDENTIFICATION DIVISION
format 85
format (program, class, method) 85
optional paragraphs 89
PROGRAM-ID paragraph 87
identifier 235
identifiers 58, 235
IF directive 591
IF statement 311
imperative statement 263
implementor-name 14
implicit
redefinition of storage area 154, 204, 205
scope terminators 267
implicit attributes, of data 70
indentation 47, 140
index
data item 252, 330
relative indexing 65
SET statement 65
index data item 62
INDEX phrase in USAGE clause 220
index-name
assigning values 369
comparisons 252
OCCURS clause 180
PERFORM statement 351
SET statement 369
INDEXED BY phrase 180
indexed files
CLOSE statement 294
DELETE statement 298
FILE-CONTROL paragraph format 108
I-O-CONTROL paragraph format 128
organization 118
permissible statements for 341
READ statement 356
REWRITE statement 362
START statement 386

indexed organization
description 118
FILE-CONTROL paragraph format 108
I-O-CONTROL paragraph format 128
indexing
description 63
MOVE statement evaluation 330
OCCURS clause 63, 177
relative 65
SET statement and 65
indicator area 46
industry specifications 637
INITIAL clause 87
initial state of program 87
INITIALIZE statement
format and description 313
overlapping operands, unpredictable results 271
inline comments 37
INPUT phrase
OPEN statement 339
USE statement 581
INPUT PROCEDURE phrase
RELEASE statement 358
SORT statement 382
Input-Output section
description 107
file control paragraph 107
FILE-CONTROL keyword 107
FILE-CONTROL paragraph 107
format 107
I-O-CONTROL paragraph 128
input-output statements
ACCEPT 279
CLOSE 293
common processing facilities 272
DELETE 297
DISPLAY 298
EXCEPTION/ERROR procedures 582
general description 272
OPEN 338
READ 352
REWRITE 360
START 385
WRITE 401
INSERT statement 574
insertion editing
fixed (numeric-edited items) 199
floating (numeric-edited items) 200
simple 198
special (numeric-edited items) 199
INSPECT statement
AFTER phrase 320
BEFORE phrase 320
comparison cycle 323
CONVERTING phrase 321
overlapping operands, unpredictable results 271
REPLACING phrase 318
INSTALLATION paragraph
description 89
format 85
integer arguments 428
INTEGER function 475
integer function arguments 429
integer functions 426, 427
INTEGER-OF-DATE function 477
INTEGER-OF-DAY function 479
INTEGER-PART function 481
internal floating-point
DISPLAY statement 299
size of items 147
internal floating-point category 144
internal floating-point items
alignment rules 146
how to define 191
INTO phrase
DIVIDE statement 300
READ statement 352
RETURN statement 359
STRING statement 388
UNSTRING statement 397
with identifier 277
intrinsic functions
ACOS 439
ADD-DURATION 441
alphanumeric functions 426
ANNUITY 443
ASIN 445
ATAN 447
categories 142
CHAR 449
classes 142
CONVERT-DATE-TIME 451
COS 453
CURRENT-DATE 455
DATE-OF-INTEGER 457
DATE-TO-YYYYMMDD 459
DATEVAL 461
DAY-OF-INTEGER 463
DAY-TO-YYYYDDD 465
DISPLAY-OF 467
EXTRACT-DATE-TIME 469
FACTORIAL 471
FIND-DURATION 473
floating-point literals 429
INTEGER 475
integer functions 426
INTEGER-OF-DATE 477
INTEGER-OF-DAY 479
INTEGER-PART 481
LENGTH 483
LOG 485
LOG10 487
LOWER-CASE 489
MAX 491
MEAN 493
MEDIAN 495
MIDRANGE 497
MIN 499
MOD 501
national functions 426
NATIONAL-OF 503
numeric functions 426
NUMVAL 505
NUMVAL-C 507
ORD 509
ORD-MAX 511
ORD-MIN 513
PRESENT-VALUE 515

intrinsic functions *(continued)*
RANDOM 517
RANGE 519
REM 521
REVERSE 523
SIN 525
SQRT 527
STANDARD-DEVIATION 529
SUBTRACT-DURATION 531
SUM 533
summary of 434
TAN 535
TEST-DATE-TIME 537
TRIM 539
TRIML 541
TRIMR 543
UNDATE 545
UPPER-CASE 547
UTF8STRING 549
VARIANCE 551
WHEN-COMPILED 553
YEAR-TO-YYYY 555
YEARWINDOW 557
invalid key condition 277
INVALID KEY phrase
DELETE statement 298
READ statement 354
REWRITE statement 361
START statement 386
WRITE statement 405
ISCII standard 637
ISO COBOL standards 637

J

JUSTIFIED clause
description and format 174
effect on initial settings 175
STRING statement 389
truncation of data 174
USAGE IS INDEX clause and 174
VALUE clause and 223

K

Kanji 242
key of reference 118
KEY phrase
OCCURS clause 178
READ statement 354
SEARCH statement 367
SORT statement 378, 380
START statement 385
keyboard navigation xxi
keyword 662

L

LABEL RECORDS clause
description 158
format 149
language-name 14
LEADING phrase
LEADING phrase *(continued)*
INSPECT statement 318, 319
SIGN clause 209
LENGTH function 483
LENGTH OF special register 20
LESS THAN OR EQUAL TO symbol (<=) 244
LESS THAN symbol (<) 244
level
01 item 139
02-49 item 139
level indicator
(FD and SD) 47
definition 138
level-number
(01 and 77) 47
66, renames 140
77, elementary item 140
88, conditional variable 140
definition 138
description and format 164
FILLER phrase 165
levels of data 138, 139
library-name
COPY statement 564
LIKE clause
description 175
format 175
rules and restrictions 176
LINAGE clause
description 159
diagram of phrases 159
format 149
LINAGE-COUNTER special register
description 21
WRITE statement 404
LINE
WRITE statement 403
line advancing 403
line-sequential file organization 118
LINES
WRITE statement 403
LINES AT BOTTOM phrase 159
LINES AT TOP phrase 159
linkage section
requirement for indexed items 180
VALUE clause 223
LINKAGE SECTION
called subprogram 233
description 137
List of resources 683
literal
boolean 32
literals
and arithmetic expressions 235
ASSIGN clause 112
categories 143
classes 143
CODE-SET clause and ALPHABET clause 99
CURRENCY SIGN clause 101
DBCS 32
description 29
null-terminated alphanumeric 31
STOP statement 387

literals *(continued)*
VALUE clause 224
Z literals 31
literals, class and category of 141
local-storage
requirement for indexed items 180
LOCAL-STORAGE
defining with RECURSIVE clause 87
locale 635
LOCALE OF special register 22
LOCALE phrase
data description entry context 172
LOCALE OF special register and 22
SPECIAL-NAMES context 105
LOCALE phrase, FORMAT clause 104
locales
FORMAT OF special register 19
locales, setting with SET statement 374
LOG function 485
LOG10 function 487
logical operator
complex condition 256
in evaluation of combined conditions 259
list of 256
logical record
definition 137
file data 137
program data 138
record description entry and 138
RECORDS phrase 155
LOW-VALUE figurative constant 15, 99
LOW-VALUES figurative constant 15, 99
LOWER-CASE function 489
lowercase letters
in PICTURE clause 184
LSQ file system 108

M

MAX function 491
maximum index value 65
MEAN function 493
MEDIAN function 495
MEMORY SIZE clause 95
MERGE statement
ASCENDING/DESCENDING KEY phrase 325
COLLATING SEQUENCE phrase 327
format and description 325
GIVING phrase 328
OUTPUT PROCEDURE phrase 328
USING phrase 327
method data division
format 135
method WORKING-STORAGE 136
methods
recursively reentering 87
MIDRANGE function 497
millennium language extensions
syntax 73
millennium language extensions (MLE) (See also date field)
description 73
MIN function 499
minus sign (-)
COBOL character 3
minus sign (-) *(continued)*
fixed insertion symbol 199
floating insertion symbol 200, 202
SIGN clause 209
mnemonic-name
ACCEPT statement 279
DISPLAY statement 299
SET statement 371
SPECIAL-NAMES paragraph 98
WRITE statement 404
MOD function 501
MOVE statement
CORRESPONDING phrase 329
elementary moves 330
format and description 329
group moves 335
record area 335
multibyte characters
in COBOL words 12
MULTIPLE FILE TAPE clause 131
multiple record processing, READ statement 355
multiple results, arithmetic statements 271
MULTIPLY statement
common phrases 268
format and description 336

N

N symbol in PICTURE clause 185
NAME phrase
XML GENERATE statement 412
NAMESPACE phrase 411
NAMESPACE-PREFIX phrase 411
national category 145
national comparisons 250
national data items
elementary move rules 332
in a class condition 240
in ACCEPT 279
in UNSTRING statement 395
SEARCH statement 367
national floating-point 194
national function arguments 429
national functions 426, 427
national groups
CORRESPONDING phrase 173
description 173
INITIALIZE statement 173
qualification of data-names 173
RENAMES clause 173
where processed as group 173
XML GENERATE statement 173
national items
alignment rules 146
how to define 194
PICTURE clause 194
national literals
in ACCEPT 279
national literals in hexadecimal notation 35
NATIONAL phrase in USAGE clause 221
national-edited category 145
national-edited items
alignment rules 146
how to define 195

NATIONAL-OF function 503
native binary data item 218
native character set 99
native collating sequence 99
negated combined condition 258
negated simple condition 257
NEGATIVE in sign condition 255
nested IF structure
    description 313
    EVALUATE statement 304
nested programs
    description 77
    precedence rules for 582
next executable statement 71
NEXT RECORD phrase, READ statement 353
NEXT SENTENCE phrase
    IF statement 312
    SEARCH statement 364
    SEARCH statement (binary search) 367
    SEARCH statement (serial search) 365
NO ADVANCING phrase, DISPLAY statement 299
NO REWIND phrase
    OPEN statement 339
nondate (See also date field)
    definition 75
nonreel file, definition 294
NOT AT END phrase
    READ statement 354
    RETURN statement 360
NOT END-OF-PAGE phrase 404
NOT INVALID KEY phrase
    DELETE statement 298
    READ statement 354
    REWRITE statement 361
    START statement 386
NOT ON EXCEPTION phrase
    CALL statement 291
    XML GENERATE statement 414
    XML PARSE statement 419
NOT ON OVERFLOW phrase
    STRING statement 389
    UNSTRING statement 398
NOT ON SIZE ERROR phrase
    ADD statement 285
    DIVIDE statement 303
    general description 269
    MULTIPLY statement 337
    SUBTRACT statement 394
NSYMBOL compiler option 3
NULL
    figurative constant 16
null block branch, CONTINUE statement 297
null-terminated alphanumeric literals 31
NULL/NULLS
    data pointer 254, 372
    figurative constant 228
    function-pointer 255, 373
    procedure-pointer 255, 373
NULLS
    figurative constant 16
numeric arguments 428, 429
numeric category 145
NUMERIC class test 241
numeric comparisons 251
numeric function arguments 429
numeric functions 426, 427
numeric items
    alignment rules 146
    how to define 196
    millennium dates 196
    PICTURE clause 196
numeric literals 33
numeric-edited category 145
numeric-edited item
    editing signs 147
    elementary move rules 333
numeric-edited items
    alignment rules 146
    how to define 197
    PICTURE clause 197
NUMVAL function 505
NUMVAL-C function 507

O

object data division
    format 135
object program 77
object reference
    in SET statement 369
object WORKING-STORAGE 136
OBJECT-COMPUTER paragraph 94
object-oriented COBOL
    conformance rules
        SET...USAGE OBJECT REFERENCE 374
    effect of VALUE clause 136
    IDENTIFICATION DIVISION (class and method) 85
    procedure division (classes and methods) 231
    specifying configuration section 93
objects in EVALUATE statement 305
obsolete language elements 609
OCCURS clause
    ASCENDING/DESCENDING KEY phrase 178
    description 177
    INDEXED BY phrase 180
    restrictions 178
    variable-length tables format 180
OCCURS DEPENDING ON (ODO) clause
    complex 182
    description 181
    object of 181
    RECORD clause 156
    REDEFINES clause and 177
    SEARCH statement and 177
    subject and object of 181
    subject of 177, 181
    subscripting 63
OFF phrase, SET statement 371
OMITTED phrase 288, 289
ON EXCEPTION phrase
    CALL statement 291
    XML GENERATE statement 414
    XML PARSE statement 419
ON OVERFLOW phrase
    CALL statement 291
    STRING statement 389, 398
ON phrase, SET statement 371
ON SIZE ERROR phrase

ON SIZE ERROR phrase *(continued)*
ADD statement 285
arithmetic statements 269
COMPUTE statement 296
DIVIDE statement 303
MULTIPLY statement 337
SUBTRACT statement 394
OPEN statement
format and description 338
I-O phrase 339
phrases 338
programming notes 340
system dependencies 341
operands
comparison of alphanumeric 249, 250
comparison of date-time 250
comparison of DBCS 250
comparison of group 252
comparison of national 250
comparison of numeric 251
composite of 270
overlapping 271, 272
operation of XML GENERATE statement 414
operational sign
algebraic, description of 147
SIGN clause and 147
USAGE clause and 147
operational signs 147
optional words, syntax notation xix
ORD function 509
ORD-MAX function 511
ORD-MIN function 513
order of entries
clauses in FILE-CONTROL paragraph 108
I-O-CONTROL paragraph 128
order of evaluation in combined conditions 259
ORGANIZATION clause
description 117
format 108
INDEXED phrase 117
LINE SEQUENTIAL phrase 117
RELATIVE phrase 117
SEQUENTIAL phrase 117
out-of-line PERFORM statement 343
outermost programs, debugging 583
OUTPUT phrase 339
OUTPUT PROCEDURE phrase
MERGE statement 328
RETURN statement 359
SORT statement 384
OVERFLOW phrase
CALL statement 291
STRING statement 389, 398
overlapping operands invalid in
arithmetic statements 271
data manipulation statements 272

P

P symbol in PICTURE clause 185, 189
PACKED-DECIMAL phrase in USAGE clause 218
PADDING CHARACTER clause 120
PAGE
WRITE statement 404
page eject 50
paragraph
header, specification of 47
termination, EXIT statement 307
paragraph-name
description 235
specification of 47
paragraphs
description 43, 235
syntactical hierarchy 43
parentheses
combined conditions, use 258
in arithmetic expressions 236
partial listings 562
PASSWORD clause
description 127
PERFORM statement
branching 343
conditional 346
END-PERFORM phrase 342
EVALUATE statement 304
execution sequences 343
EXIT statement 307
format and description 342
in-line 343
out-of-line 343
TIMES phrase 346
VARYING phrase 347, 349
period (.)
actual decimal point 199
PGMNAME compiler option
CANCEL statement 292
phrases
definition 44
syntactical hierarchy 43
physical record
BLOCK CONTAINS clause 155
definition 137
file data 137
file description entry and 138
RECORDS phrase 155
PICTURE character-strings 36
PICTURE clause
and class condition 240
computational items and 217
CURRENCY SIGN clause 101
data categories 190
DECIMAL-POINT IS COMMA clause 102, 184
description 182
editing 197
format 182
LOCALE phrase 183
sequence of symbols 187, 189
symbols used in 184
PICTURE SYMBOL phrase 101
picture symbols
- 186
, 186
. 186
* 186
/ 186
+ 186
$ (currency symbol) 186
0 186

picture symbols *(continued)*
9 186
A 184
asterisk 186
B 184
comma 186
CR 186
currency symbol (cs) 186, 190
DB 186
E 185
G 185
minus 186
N 185
P 185, 189
period 186
plus 186
S 185
sequence of 187
slash 186
V 185
X 185
Z 185
plus (+)
fixed insertion symbol 199
floating insertion symbol 200, 202
insertion character 202
SIGN clause 209
pointer data items
relation condition 254
SET statement 372
USAGE clause 221
POINTER phrase
STRING statement 388
UNSTRING statement 397
POINTER phrase in USAGE clause 221
POSITIVE in sign condition 255
PRESENT-VALUE function 515
PREVIOUS RECORD phrase, READ statement 353
priority-number 95
procedure branching
GO TO statement 310
statements, executed sequentially 279
procedure branching statements 279
procedure division
description 231
format (programs, methods, classes) 231
PROCEDURE DIVISION
declarative procedures 234
header 232
statements 279
PROCEDURE DIVISION header
GIVING phrase 233
RETURNING phrase 233
USING phrase 232
PROCEDURE DIVISION names 58
procedure pointer data items
relation condition 255
procedure-name
GO TO statement 310
MERGE statement 328
PERFORM statement 343
SORT statement 382
procedure-pointer data items
SET statement 373
procedure-pointer data items *(continued)*
USAGE clause 222
PROCEDURE-POINTER phrase in USAGE clause 222
procedures, description 234
PROCESS (CBL) statement 562
PROCESSING PROCEDURE phrase, in XML PARSE 418
product support 683
PROGRAM COLLATING SEQUENCE clause
ALPHABET clause 99
SPECIAL-NAMES paragraph and 94
program data 138
program data division
format 135
program definition
program procedure division 231
program identification division 85
program LOCAL-STORAGE 137
program procedure division 231
program termination
GOBACK statement 309
STOP statement 387
program WORKING-STORAGE 136
PROGRAM-ID paragraph
description 87
format 85
program-name 54
program-name, rules for referencing 82
program, separately compiled 77
Programming interface information 641
programming notes
ACCEPT statement 279
altered GO TO statement 285
arithmetic statements 271
data manipulation statements 387, 395
DELETE statement 297
EXCEPTION/ERROR procedures 582
OPEN statement 340
PERFORM statement 343
RECORD clause 156
STRING statement 387
UNSTRING statement 395
programming structures 346
programs, recursive 87
pseudo-text
continuation rules 577
COPY statement operand 566
description 51
pseudo-text delimiters 40

Q

QSAM
file 294
file system 108
qualification 57
quotation mark character 48
QUOTE figurative constant 16
QUOTES figurative constant 16

R

railroad track format, how to read xix
random access mode

random access mode *(continued)*
data organization and 123
DELETE statement 298
description 122
READ statement 357
RANDOM function 517
RANGE function 519
RCFs
sending xxii
READ statement
AT END phrases 354
dynamic access mode 358
format and description 352
INTO identifier phrase 277, 353
INVALID KEY phrase 277, 354
KEY phrase 354
multiple record processing 355
NEXT RECORD phrase 353
overlapping operands, unpredictable results 271
programming notes 358
random access mode 357
reader comments
sending xxii
READY TRACE statement 575
receiving field
COMPUTE statement 295
MOVE statement 329
multiple results rules 271
SET statement 369
STRING statement 388
UNSTRING statement 397
record
area description 156
elementary items 138
fixed-length 155
logical, definition of 137
physical, definition of 137
record area
MOVE statement 335
RECORD clause
description and format 156
omission of 156
RECORD CONTAINS 0 CHARACTERS 156
RECORD DELIMITER clause 120
record description entry
levels of data 139
logical record 138
RECORD KEY clause
description 123
format 108
record key in indexed file 298
record-description entry
LINKAGE SECTION 137
record-description-entry 136
record-key-name 53
record-name 53
RECORDING MODE clause 160
RECORDS phrase
BLOCK CONTAINS clause 155
RERUN clause 130
RECURSIVE clause 87
recursive programs
requirement for indexed items 180
REDEFINES clause
REDEFINES clause *(continued)*
description 203
examples of 205
format 203
general considerations 205
OCCURS clause restriction 203
undefined results 206
VALUE clause and 203
redefinition, implicit 154
REEL phrase 293, 294
reference format
extended source format 45
fixed source format 45
reference-modification
description 66
MOVE statement evaluation 330
reference, methods of
simple data 58
relation character
COPY statement 566
INITIALIZE statement 313
INSPECT statement 318
relation conditions
abbreviated combined 260
alphanumeric comparisons 245, 249, 250
comparison operations 245
data pointer 253
date-time comparisons 250
DBCS comparisons 245, 250
description 244
function-pointer operands 255
general relation 244
group comparisons 245
national comparisons 245
numeric comparisons 245
procedure pointer operands 255
relational operator
in abbreviated combined relation condition 260
meaning of each 245
relation condition use 244
relational operators 15
relative files
access modes allowed 123
CLOSE statement 294
DELETE statement 298
FILE-CONTROL paragraph format 108
I-O-CONTROL paragraph format 128
organization 118
permissible statements for 341
READ statement 355
RELATIVE KEY clause 123, 127
REWRITE statement 362
START statement 387
RELATIVE KEY clause
description 127
format 108
relative organization
access modes allowed 123
description 118
FILE-CONTROL paragraph format 108
I-O-CONTROL paragraph format 128
RELEASE statement 271, 358
REM function 521
REMAINDER phrase of DIVIDE statement 303

RENAMES clause
description and format 206
INITIALIZE statement 314
level 66 item 140, 206
PICTURE clause 183
repeated words, syntax notation xx
REPLACE statement
comparison operation 577
continuation rules for pseudo-text 577
description and format 575
special notes 578
replacement editing 202
replacement rules for COPY statement 567
REPLACING phrase
COPY statement 566
INITIALIZE statement 313, 315
required words, syntax notation xix
RERUN clause
checkpoint processing 129
description 129
format 128
RECORDS phrase 129
sort/merge 130
RESERVE clause
description 117
format 108
reserved words 14, 619
RESET TRACE statement 575
resolution of names 55
result field
GIVING phrase 268
NOT ON SIZE ERROR phrase 269
ON SIZE ERROR phrase 269
ROUNDED phrase 268
RETURN statement
AT END phrase 360
description and format 359
overlapping operands, unpredictable results 271
RETURN-CODE special register 22
RETURNING phrase
CALL statement 290
PROCEDURE DIVISION header 233
reusing logical records 362
REVERSE function 523
REWRITE statement
description and format 360
FROM identifier phrase 277
INVALID KEY phrase 361
ROUNDED phrase
ADD statement 285
COMPUTE statement 296
description 268
DIVIDE statement 303
MULTIPLY statement 337
size error checking and 270
SUBTRACT statement 394
RSD file
WRITE statement 404
rules for condition-name entries 226
rules for syntax notation xix
run unit
description 77
termination with CANCEL statement 292
runtime options
runtime options *(continued)*
DEBUG 619
NODEBUG 619

S

S symbol in PICTURE clause 185
S01-S05 environment names 403
SAME clause 130
SAME RECORD AREA clause
description 130
format 128
SAME SORT AREA clause
description 131
format 128
SAME SORT-MERGE AREA clause
description 131
format 128
scope of names 53
scope terminator
explicit 266
implicit 267
SD (sort file description) entry
data division 154
DATA RECORDS clause 158
description 154
level indicator 138
SD (Sort File Description) entry
description 149
SEARCH statement
AT END phrase 364
binary search 367
description and format 363
serial search 364
SET statement 364
VARYING phrase 365
WHEN phrase 368
SEARCH STATEMENT
NEXT SENTENCE phrase 364
section header
description 234
specification of 46
section-name
description 234
in EXCEPTION/ERROR declarative 581
sections 43, 234
SECURITY paragraph
description 89
format 85
SEGMENT-LIMIT clause 95
SELECT clause
ASSIGN clause and 112
format 108
specifying a file name 112
SELECT OPTIONAL clause
CLOSE statement 294
description 112
format 108
specification for sequential I-O files 112
selection objects in EVALUATE statement 305
selection subjects in EVALUATE statement 305
sending field
MOVE statement 329
SET statement 369

sending field *(continued)*
STRING statement 388
UNSTRING statement 395
sentences
definition 44
description 235
syntactical hierarchy 43
SEPARATE CHARACTER phrase of SIGN clause 209
separately compiled program 77
separators 39, 226
separators, rules for 39
sequence number area (cols. 1-6) 45
sequential access mode
data organization and 123
DELETE statement 297
description 122
READ statement 355
REWRITE statement 362
sequential files
access mode allowed 123
CLOSE statement 293, 294
description 118
file description entry 149
FILE-CONTROL paragraph format 108
LINAGE clause 159
OPEN statement 338
PASSWORD clause valid with 127
permissible statements for 341
READ statement 355
REWRITE statement 362
SELECT OPTIONAL clause 112
serial search
PERFORM statement 347
SERVICE LABEL statement 579
SERVICE RELOAD statement 579
SET statement
Adjusting Pointers 374
description and format 369
DOWN BY phrase 370, 374
dynamic-length elementary items 374
function-pointer data items 220, 373
index data item 220
locales, setting 374
object reference data items 374
OFF phrase 371
ON phrase 371
overlapping operands, unpredictable results 271
pointer data items 372
procedure-pointer data items 373
requirement for indexed items 180
SEARCH statement 370
TO phrase 369
TO TRUE phrase 371
UP BY phrase 370, 374
SFS file system
FILE STATUS clause 128
sharing data 173
sharing files 155
SHIFT-IN special register 22
SHIFT-OUT special register 22
sibling program 77
SIGN clause 208
sign condition 255
SIGN IS SEPARATE clause 209
signed
numeric item, definition 196
operational signs 147
simple condition
combined 258
description and types 240
negated 257
simple data reference 58
simple insertion editing 198
SIN function 525
single-byte ASCII 7
single-byte EBCDIC 7
size-error condition 269
skip to next page 50
SKIP1 statement 580
SKIP2 statement 580
SKIP3 statement 580
slack bytes
between 213
within 211
slash (/)
comment lines 50
insertion character 198
symbol in PICTURE clause 186
SORT statement
ASCENDING KEY phrase 378, 380
COLLATING SEQUENCE phrase 382
DESCENDING KEY phrase 378, 380
description and format 376
DUPLICATES phrase 381
GIVING phrase 383
INPUT PROCEDURE phrase 382
OUTPUT PROCEDURE phrase 384
USING phrase 382
SORT-CONTROL special register 23, 384
SORT-CORE-SIZE special register 23, 384
SORT-FILE-SIZE special register 23, 384
SORT-MESSAGE special register 24, 384
SORT-MODE-SIZE special register 24, 384
SORT-RETURN special register 24, 384
Sort/Merge feature
I-O-CONTROL paragraph format 128
MERGE statement 325
RELEASE statement 358
RERUN clause 130
RETURN statement 359
SAME SORT AREA clause 131
SAME SORT-MERGE AREA clause 131
SORT statement 376
Sort/Merge file statement phrases
ASCENDING/DESCENDING KEY phrase 325
COLLATING SEQUENCE phrase 327
GIVING phrase 328
OUTPUT PROCEDURE phrase 328
USING phrase 327
SOSI compiler option 32
source code
library, programming notes 569
listing 563
source code format 45
source language debugging 617
source program
standard COBOL reference format 45
SOURCE-COMPUTER paragraph 93

SPACE figurative constant 15
SPACES figurative constant 15
special insertion editing 199
special register
    FORMAT OF 19
    LOCALE OF 22
special registers
    ADDRESS OF 18
    DEBUG-ITEM 18
    LENGTH OF 20
    LINAGE-COUNTER 21
    RETURN-CODE 22
    SHIFT-OUT, SHIFT-IN
    22
    SORT-CONTROL 23
    SORT-CORE-SIZE 23
    SORT-FILE-SIZE 23
    SORT-MESSAGE 24
    SORT-MODE-SIZE 24
    SORT-RETURN 24
    TALLY 25
    WHEN-COMPILED 25
    XML-CODE 25
    XML-EVENT 26
    XML-NTEXT 28
    XML-TEXT 28
SPECIAL-NAMES paragraph
    ACCEPT statement 279
    ALPHABET clause 99
    CLASS clause 100
    CODE-SET clause and 160
    CURRENCY SIGN clause 101
    DECIMAL-POINT IS COMMA clause 102
    description 95
    format 95
    FORMAT clause 102
    LOCALE clause 105
    mnemonic-name 98
SQRT function 527
standard alignment
    JUSTIFIED clause 175
standard alignment rules
    date-time data items 146
STANDARD-1
    RECORD DELIMITER clause 120
STANDARD-1 phrase 99
STANDARD-2 phrase 99
STANDARD-DEVIATION function 529
standards 637
START statement
    description and format 385
    indexed file 386
    INVALID KEY phrase 277, 386
    relative files 387
    status key considerations 386
statement operations
    common phrases 267
    file position indicator 278
    INTO and FROM phrases 277
statements
    categories of 263
    conditional 264
    data manipulation 272
    definition 44
statements *(continued)*
    delimited scope 266
    description 235
    imperative 263
    input-output 272
    procedure branching 279
    syntactical hierarchy 43
    types of 44
status key
    common processing facility 272
    file processing 582
STOP RUN statement 387
STOP statement 387
storage
    map listing 563
    MEMORY SIZE clause 95
    REDEFINES clause 203
STRING statement
    description and format 387
    execution of 389
    overlapping operands, unpredictable results 271
structure of the COBOL language 3
structured programming
    DO-WHILE and DO-UNTIL
    346
subjects in EVALUATE statement 305
subprogram linkage
    CALL statement 286
    CANCEL statement 292
    ENTRY statement 304
subprogram termination
    CANCEL statement 292
    EXIT PROGRAM statement 308
    GOBACK statement 309
subscripting
    definition and format 63
    INDEXED BY phrase of OCCURS clause 180
    MOVE statement evaluation 330
    OCCURS clause specification 177
    table references 63
    using data-names 64
    using index-names (indexing) 63
    using integers 64
substitution characters
    DISPLAY-OF 467
    NATIONAL-OF 503
substitution field of INSPECT REPLACING 318
substrings, specifying (reference-modification) 66
SUBTRACT statement
    common phrases 267
    description and format 392
SUBTRACT-DURATION function 531
SUM function 533
support 683
SUPPRESS option, COPY 566
suppress output 562
SUPPRESS phrase
    XML GENERATE statement 413
suppression editing 202
switch-status condition 256
symbol
    sequence in PICTURE clause 187
    sequence in PICTURE clause with LOCALE phrase 189
SYMBOLIC CHARACTERS clause 105

symbolic-character 13, 54
symbolic-character figurative constant 16
symbols in PICTURE clause 184
SYNCHRONIZED clause
    effect on other language elements 210
    VALUE clause and 223
syntax notation, rules for xix
system considerations, subprogram linkage
    CALL statement 286
    CANCEL statement 292
system information transfer, ACCEPT statement 280
system-names
    computer-name 93
    SOURCE-COMPUTER paragraph 93

T

table references
    indexing 63
    subscripting 63
TALLY special register 25
TALLYING phrase
    INSPECT statement 318
    UNSTRING statement 398
TAN function 535
termination of execution
    EXIT PARAGRAPH statement 309
    EXIT PERFORM statement 308
    EXIT PROGRAM statement 308
    EXIT SECTION statement 309
    GOBACK statement 309
    STOP RUN statement 387
terminators, scope 266
TEST-DATE-TIME function 537
text words 565
text-name
    literal-1 564
THREAD compiler option
    requirement for indexed items 180
THROUGH (THRU) phrase
    ALPHABET clause 99
    CLASS clause 100
    EVALUATE statement 305
    PERFORM statement 343
    RENAMES clause 206
    VALUE clause 225
TIME 102, 170, 282
time category 144
TIMES phrase of PERFORM statement 346
TIMESTAMP 170
timestamp category 144
TITLE statement 580
TO phrase, SET statement 369
TO TRUE phrase, SET statement 371
transfer of control
    ALTER statement 285
    basic PERFORM statement 343
    explicit 71
    GO TO statement 310
    IF statement 312
    implicit 71
    PERFORM statement 342
    XML PARSE statement 417
transfer of data
transfer of data *(continued)*
    ACCEPT statement 279
    MOVE statement 329
    STRING statement 387
    UNSTRING statement 395
TRIM function 539
TRIML function 541
trimming of generated XML data 416
TRIMR function 543
TRUNC compiler option 147
truncation of data
    arithmetic item 147
    JUSTIFIED clause 174
    ROUNDED phrase 268
    TRUNC compiler option 147
truth value
    complex conditions 256
    EVALUATE statement 306
    IF statement 311
    of complex condition 257
    sign condition 255
    with conditional statement 264
TYPE clause
    description 214
    FORMAT clause and 171
    LIKE clause and 177
type conformance
    SET...USAGE OBJECT REFERENCE 374
TYPE phrase
    XML GENERATE statement 412
TYPEDEF clause
    description 215
types of functions 426

U

unary operator 236
unconditional GO TO statement 310
UNDATE function 545
Unicode 3, 7
unique names 140
uniqueness of reference 57
unit file, definition 294
UNIT phrase 293
unsigned numeric item, definition 196
UNSTRING statement
    description and format 395
    execution 399
    overlapping operands, unpredictable results 271
    receiving field 397
    sending field 395
UP BY phrase, SET statement 370, 374
UPON phrase, DISPLAY 299
UPPER-CASE function 547
UPSI-0 through UPSI-7, program switches
    and switch-status condition 256
    condition-name 98
    processing special conditions 98
    SPECIAL-NAMES paragraph 98
USAGE clause
    BINARY phrase 217
    CODE-SET clause and 160
    COMPUTATIONAL phrases 218
    COMPUTATIONAL-1 phrase 176

USAGE clause *(continued)*
COMPUTATIONAL-2 phrase 176
description 216
DISPLAY phrase 219
DISPLAY-1 phrase 220
format 216
FUNCTION-POINTER phrase 220
INDEX phrase 220
NATIONAL phrase 173, 221
operational signs and 147
PACKED-DECIMAL phrase 218
POINTER phrase 221
PROCEDURE-POINTER phrase 222
VALUE clause and 223
USAGE COMP-1
size of items 147
USAGE COMP-2
size of items 147
USAGE DISPLAY
size of items 147
STRING statement and 388
USAGE DISPLAY-1
size of items 147
STRING statement and 388
USAGE NATIONAL
size of items 147
STRING statement and 388
USE FOR DEBUGGING declarative 619
USE statement
format and description 581
user labels
DEBUGGING declarative 583
user-defined data type 69
user-defined words 12
USING phrase
CALL statement 287
in PROCEDURE DIVISION header 232
MERGE statement 327
PROCEDURE DIVISION header 232
SORT statement 382
subprogram linkage 233
UTF-16 3, 7
UTF-8 7
UTF-8 groups
RENAMES clause 173
UTF8STRING function 549

V

V symbol in PICTURE clause 185
VALUE clause
condition-name 225
effect on object-oriented programs 136
format 223, 225
level 88 item 140
NULL/NULLS figurative constant 220, 228
rules for condition-name entries 226
rules for literal values 224
VALUE OF clause
description 158
format 149
variable-length tables 180, 181
VARIANCE function 551
VARYING phrase
VARYING phrase *(continued)*
PERFORM statement 347
SEARCH statement 365

W

WHEN phrase
EVALUATE statement 305
SEARCH statement (binary search) 367
SEARCH statement (serial search) 366
WHEN-COMPILED function 553
WHEN-COMPILED special register 25
windowed date field
expansion before use 166
windowed date field (See also date field)
definition 74
WITH DEBUGGING MODE clause 94, 583, 617
WITH DUPLICATES phrase, SORT statement 381
WITH FOOTING phrase 159
WITH NO ADVANCING phrase 299
WITH NO REWIND phrase, CLOSE statement 294
WITH POINTER phrase
STRING statement 388
UNSTRING statement 397
WORKING-STORAGE SECTION 136
WRITE statement
AFTER ADVANCING 404
ALTERNATE RECORD KEY 406
BEFORE ADVANCING 404
description 401
END-OF-PAGE phrase 404
format 401
FROM identifier phrase 277
indexed files 406
NOT END-OF-PAGE phrase 404
relative files 406
sequential files 406

X

X symbol in PICTURE clause 185
X'00' - X'1F' control characters 30, 31
XML GENERATE statement
ATTRIBUTES phrase 411
COUNT IN phrase 410
description 408
element name formation 417
ENCODING phrase 410
END-XML phrase 414
exception event 414
format 408
format conversion 415
NAME phrase 412
NAMESPACE phrase 411
NAMESPACE-PREFIX phrase 411
NOT ON EXCEPTION phrase 414
ON EXCEPTION phrase 414
operation 414
SUPPRESS phrase 413
trimming 416
TYPE phrase 412
XML-DECLARATION phrase 411
XML PARSE statement

XML PARSE statement *(continued)*
control flow 420
description 417
exception event 419
format 417
nested XML GENERATE 420
nested XML PARSE 420
ON EXCEPTION phrase 419
PROCESSING PROCEDURE phrase 418
XML processing
ENCODING phrase, in XML GENERATE 410
PROCESSING PROCEDURE phrase, in XML PARSE 418
XML-CODE special register 25, 417
XML-EVENT special register 26, 417
XML-NTEXT special register 28, 417
XML-TEXT special register 28, 417
XML-CODE special register
use in XML GENERATE 414
use in XML PARSE 419
XML-DECLARATION phrase 411
XML-EVENT special register 26, 420
XML-NTEXT special register 28, 421
xml-schema-name 54
XML-TEXT special register 28, 421

Y

year-last date field (See also date field)
definition 74
YEAR-TO-YYYY function 555
YEARWINDOW compiler option
century window 75
YEARWINDOW function 557

Z

Z
insertion character 202
null-terminated literals 31
symbol in PICTURE clause 185
Z literals 31
zero
filling, elementary moves 330
suppression and replacement editing 202
ZERO figurative constant 15
ZERO in sign condition 255
ZEROES figurative constant 15
ZEROS figurative constant 15

Product Number: 5737-L11

SC28-3117-01