Db2 12 for z/OS

Command Reference

Last updated: 2024-05-31

SC27-8848-02

Notes

Before using this information and the product it supports, be sure to read the general information under "Notices" at the end of this information.

Subsequent editions of this PDF will not be delivered in IBM Publications Center. Always download the latest edition from IBM Documentation.

2024-05-31 edition

This edition applies to Db2® 12 for z/OS® (product number 5650-DB2), Db2 12 for z/OS Value Unit Edition (product number 5770-AF3), and to any subsequent releases until otherwise indicated in new editions. Make sure you are using the correct edition for the level of the product.

Specific changes are indicated by a vertical bar to the left of a change. A vertical bar to the left of a figure caption indicates that the figure has changed. Editorial changes that have no technical significance are not noted.

© Copyright International Business Machines Corporation 1983, 2024.
US Government Users Restricted Rights – Use, duplication or disclosure restricted by GSA ADP Schedule Contract with IBM Corp.

Contents

About this information ..... **xi**
Who should read this information xii
Db2 Utilities Suite for z/OS xii
Terminology and citations xii
Accessibility features for Db2 for z/OS xiii
How to send comments xiii
How to read syntax diagrams xiv

Part 1. About Db2 and related commands **1**

Chapter 1. Commands in Db2 3

Chapter 2. Command types and environments in Db2 9

Chapter 3. ABEND (DSN) 15

Chapter 4. -ACCESS DATABASE command (Db2) 17

Chapter 5. -ACTIVATE command (Db2) 23

Chapter 6. -ALTER BUFFERPOOL command (Db2) 27

Chapter 7. -ALTER GROUPBUFFERPOOL command (Db2) 37

Chapter 8. -ALTER UTILITY command (Db2) 43

Chapter 9. -ARCHIVE LOG command (Db2) 47

Chapter 10. BIND PACKAGE subcommand (DSN) 53

Chapter 11. BIND PLAN subcommand (DSN) 65

Chapter 12. BIND QUERY subcommand (DSN) 71

Chapter 13. BIND SERVICE subcommand (DSN) 75

Chapter 14. BIND and REBIND options for packages, plans, and services 81
ACCELERATOR bind option 81
ACCELERATIONWAITFORDATA 82
ACQUIRE bind option 83
ACTION bind option 84
APCOMPARE bind option 85
APPLCOMPAT bind option 87
APRETAINDUP bind option 88
APREUSE bind option 89
APREUSESOURCE bind option 91
ARCHIVESENSITIVE bind option 92
BUSTIMESENSITIVE bind option 93
CACHESIZE bind option 94
COLLID bind option 94

CONCENTRATESTMT bind option..... 95
CONCURRENTACCESSRESOLUTION bind option..... 96
COPY bind option..... 97
CURRENTDATA bind option..... 100
CURRENTSERVER bind option..... 101
DBPROTOCOL bind option..... 102
DATE bind option..... 103
DEC bind option..... 104
DECDEL bind option..... 105
DEFER and NODEFER bind options..... 106
DEGREE bind option..... 107
DEPLOY bind option (deprecated)..... 108
DESCRIPTION bind option..... 109
DESCSTAT bind option..... 110
DISCONNECT bind option..... 111
DYNAMICRULES bind option..... 111
ENABLE and DISABLE bind options..... 116
ENCODING bind option..... 118
EXPLAIN bind option..... 120
EXTENDEDINDICATOR bind option..... 122
FILTER bind option..... 122
FLAG bind option..... 123
GENERIC bind option..... 124
GETACCELARCHIVE bind option..... 124
IMMEDWRITE bind option..... 126
ISOLATION bind option..... 128
KEEPDYNAMIC bind option..... 129
LIBRARY bind option..... 130
MEMBER bind option..... 131
NAME bind option..... 132
OPTHINT bind option..... 133
OWNER bind option..... 134
PACKAGE bind options..... 135
PATH bind option..... 137
PATHDEFAULT bind option..... 138
PKLIST and NOPKLIST bind options..... 138
PLAN bind options..... 140
PLANMGMT bind option..... 140
PROGAUTH bind option..... 143
QUALIFIER bind option..... 143
QUERYACCELERATION bind option..... 144
QUERYID bind option..... 146
RELEASE bind option..... 146
REOPT bind option..... 149
RESTSERVICEDEFAULT bind option..... 151
ROUNDING bind option..... 152
SQLDDNAME bind option..... 153
SQLENCODING bind option..... 154
SQLERROR bind option..... 155
SQLRULES bind option..... 156
STRDEL bind option..... 157
SWITCH bind option..... 157
SYSTIMESENSITIVE bind option..... 158
TIME bind option..... 159
VALIDATE bind option..... 160
VERSION bind option..... 161

Chapter 15. Specification of Db2 for z/OS bind options from IBM Data Server clients and drivers..... 163

Chapter 16. -CANCEL THREAD command (Db2) 165
Chapter 17. DCLGEN (declarations generator) subcommand (DSN) 171
Chapter 18. -DISPLAY ACCEL command (Db2) 181
Chapter 19. -DISPLAY ARCHIVE command (Db2) 187
Chapter 20. -DISPLAY BLOCKERS command (Db2) 189
Chapter 21. -DISPLAY BUFFERPOOL command (Db2) 193
Chapter 22. -DISPLAY DATABASE command (Db2) 213
Chapter 23. -DISPLAY DDF command (Db2) 231
Chapter 24. -DISPLAY DYNQUERYCAPTURE command (Db2) 235
Chapter 25. -DISPLAY FUNCTION SPECIFIC command (Db2) 237
Chapter 26. -DISPLAY GROUP command (Db2) 241
Chapter 27. -DISPLAY GROUPBUFFERPOOL command (Db2) 247
Chapter 28. -DISPLAY LOCATION command (Db2) 255
Chapter 29. -DISPLAY LOG (Db2) 261
Chapter 30. -DISPLAY ML command (Db2) 265
Chapter 31. -DISPLAY PROCEDURE command (Db2) 267
Chapter 32. -DISPLAY PROFILE command (Db2) 271
Chapter 33. -DISPLAY RLIMIT command (Db2) 273
Chapter 34. -DISPLAY RESTSVC command (Db2) 275
Chapter 35. -DISPLAY STATS command (Db2) 281
Chapter 36. -DISPLAY THREAD command (Db2) 287
Chapter 37. -DISPLAY TRACE command (Db2) 301
Chapter 38. -DISPLAY UTILITY command (Db2) 311
Chapter 39. DSN command (TSO) 315
Chapter 40. DSNH command procedure (TSO CLIST) 321
Chapter 41. END subcommand (DSN) 351
Chapter 42. FREE STABILIZED DYNAMIC QUERY subcommand (DSN) 353
Chapter 43. FREE PACKAGE subcommand (DSN) 355
Chapter 44. FREE PLAN subcommand (DSN) 359

Chapter 45. FREE QUERY subcommand (DSN) ... 361
Chapter 46. FREE SERVICE command (DSN) ... 365
Chapter 47. MODIFY *admtproc*,APPL=SHUTDOWN command ... 367
Chapter 48. MODIFY *admtproc*,APPL=TRACE command ... 369
Chapter 49. -MODIFY DDF command (Db2) ... 371
Chapter 50. MODIFY STOP *irlmproc* (z/OS IRLM),ABEND command (z/OS IRLM) ... 377
Chapter 51. MODIFY *irlmproc*,DIAG command (z/OS IRLM) ... 379
Chapter 52. MODIFY *irlmproc*,PURGE command (z/OS IRLM) ... 381
Chapter 53. MODIFY *irlmproc*,SET command (z/OS IRLM) ... 383
Chapter 54. MODIFY irlmproc,STATUS command (z/OS IRLM) ... 387
Chapter 55. -MODIFY TRACE command (Db2) ... 393
Chapter 56. REBIND PACKAGE subcommand (DSN) ... 397
Chapter 57. REBIND PLAN command (DSN) ... 407
Chapter 58. REBIND TRIGGER PACKAGE command (DSN) ... 413
Chapter 59. -RECOVER BSDS command (Db2) ... 419
Chapter 60. -RECOVER INDOUBT command (Db2) ... 421
Chapter 61. -RECOVER POSTPONED command (Db2) ... 425
Chapter 62. -REFRESH DB2,EARLY command (Db2) ... 427
Chapter 63. -RESET GENERICLU command (Db2) ... 429
Chapter 64. -RESET INDOUBT command (Db2) ... 431
Chapter 65. RUN subcommand (DSN) ... 435
Chapter 66. -SET ARCHIVE command (Db2) ... 439
Chapter 67. -SET LOG command (Db2) ... 441
Chapter 68. -SET SYSPARM command (Db2) ... 447
Chapter 69. SPUFI subcommand (DSN) ... 451
Chapter 70. -START ACCEL command (Db2) ... 453
Chapter 71. START admtproc command ... 457
Chapter 72. -START CDDS command (Db2) ... 459
Chapter 73. -START DATABASE command (Db2) ... 461

Chapter 74. -START DB2 command (Db2)....469
Chapter 75. -START DDF command (Db2)....475
Chapter 76. -START DYNQUERYCAPTURE command (Db2)....477
Chapter 77. -START FUNCTION SPECIFIC command (Db2)....481
Chapter 78. START *irlmproc* command z/OS IRLM)....485
Chapter 79. -START ML command (Db2)....491
Chapter 80. -START PROCEDURE command (Db2)....493
Chapter 81. -START PROFILE command (Db2)....497
Chapter 82. -START RLIMIT command (Db2)....499
Chapter 83. -START RESTSVC command (Db2)....501
Chapter 84. -START TRACE command (Db2)....505
Chapter 85. -STOP ACCEL command (Db2)....525
Chapter 86. STOP *admtproc* command (z/OS)....527
Chapter 87. -STOP CDDS command (Db2)....529
Chapter 88. -STOP DATABASE command (Db2)....531
Chapter 89. -STOP DB2 command (Db2)....537
Chapter 90. -STOP DDF command (Db2)....539
Chapter 91. -STOP DYNQUERYCAPTURE command (Db2)....543
Chapter 92. -STOP FUNCTION SPECIFIC command (Db2)....545
Chapter 93. STOP *irlmproc* command (z/OS IRLM)....549
Chapter 94. -STOP ML command (Db2)....551
Chapter 95. -STOP PROCEDURE command (Db2)....553
Chapter 96. -STOP PROFILE command (Db2)....557
Chapter 97. -STOP RLIMIT command (Db2)....559
Chapter 98. -STOP RESTSVC command (Db2)....561
Chapter 99. -STOP TRACE command (Db2)....565
Chapter 100. -TERM UTILITY command (Db2)....577
Chapter 101. TRACE CT command (z/OS IRLM)....581

Part 2. The Db2 command line processor.....585

Chapter 102. Start syntax for the Db2 command line processor.....587

Chapter 103. Properties file for the Db2 command line processor.....591

Chapter 104. Help for the Db2 command line processor.....595

Chapter 105. Running the Db2 command line processor.....597

Chapter 106. Tutorial: Using the Db2 command line processor.....599

Chapter 107. Running the Db2 command line processor in batch mode.....605

Chapter 108. Db2 command line processor return codes.....607

Chapter 109. ADD XMLSCHEMA DOCUMENT (Db2 command line processor).....609

Chapter 110. BIND (Db2 command line processor).....611

Chapter 111. CHANGE ISOLATION (Db2 command line processor).....613

Chapter 112. CHANGE MAXCOLUMNWIDTH (Db2 command line processor).....615

Chapter 113. CHANGE MAXLINESFROMSELECT (Db2 command line processor).....617

Chapter 114. COMMIT (Db2 command line processor).....619

Chapter 115. COMPLETE XMLSCHEMA (Db2 command line processor).....621

Chapter 116. CONNECT (Db2 command line processor).....623

Chapter 117. DESCRIBE CALL (Db2 command line processor).....625

Chapter 118. DESCRIBE TABLE (Db2 command line processor).....627

Chapter 119. DISCONNECT (Db2 command line processor).....629

Chapter 120. DISPLAY RESULT SETTINGS (Db2 command line processor).....631

Chapter 121. ECHO (Db2 command line processor).....633

Chapter 122. LIST COMMAND OPTIONS (Db2 command line processor).....635

Chapter 123. LIST TABLES (Db2 command line processor).....637

Chapter 124. REGISTER XMLSCHEMA (Db2 command line processor).....639

Chapter 125. REMOVE XMLSCHEMA (Db2 command line processor).....641

Chapter 126. ROLLBACK (Db2 command line processor).....643

Chapter 127. SQL statements (Db2 command line processor).....645

Chapter 128. TERMINATE (Db2 command line processor).....647

Chapter 129. z/OS UNIX System Services (Db2 command line processor)..... 649

Chapter 130. UPDATE COMMAND OPTIONS (Db2 command line processor)..... 651

Information resources for Db2 for z/OS and related products.....653

Notices.....655

Programming interface information.....656
Trademarks.....656
Terms and conditions for product documentation.....657
Privacy policy considerations.....657

Glossary.....659

Index..... 661

About this information

This information describes numerous commands that system administrators, database administrators, and application programmers use. The commands are in alphabetical order for quick retrieval.

Throughout this information, "Db2" means "Db2 12 for z/OS". References to other Db2 products use complete names or specific abbreviations.

Important: To find the most up to date content for Db2 12 for z/OS, always use IBM® Documentation or download the latest PDF file from PDF format manuals for Db2 12 for z/OS (Db2 for z/OS in IBM Documentation).

Most documentation topics for Db2 12 for z/OS assume that the highest available function level is activated and that your applications are running with the highest available application compatibility level, with the following exceptions:

- The following documentation sections describe the Db2 12 migration process and how to activate new capabilities in function levels:
  - Migrating to Db2 12 (Db2 Installation and Migration)
  - What's new in Db2 12 (Db2 for z/OS What's New?)
  - Adopting new capabilities in Db2 12 continuous delivery (Db2 for z/OS What's New?)
- FL 501 A label like this one usually marks documentation changed for function level 500 or higher, with a link to the description of the function level that introduces the change in Db2 12. For more information, see How Db2 function levels are documented (Db2 for z/OS What's New?).

The availability of new function depends on the type of enhancement, the activated function level, and the application compatibility levels of applications. In the initial Db2 12 release, most new capabilities are enabled only after the activation of function level 500 or higher.

Virtual storage enhancements
Virtual storage enhancements become available at the activation of the function level that introduces them or higher. Activation of function level 100 introduces all virtual storage enhancements in the initial Db2 12 release. That is, activation of function level 500 introduces no virtual storage enhancements.

Subsystem parameters
New subsystem parameter settings are in effect only when the function level that introduced them or a higher function level is activated. Many subsystem parameter changes in the initial Db2 12 release take effect in function level 500. For more information about subsystem parameter changes in Db2 12, see Subsystem parameter changes in Db2 12 (Db2 for z/OS What's New?).

Optimization enhancements
Optimization enhancements become available after the activation of the function level that introduces them or higher, and full prepare of the SQL statements. When a full prepare occurs depends on the statement type:

- For static SQL statements, after bind or rebind of the package
- For non-stabilized dynamic SQL statements, immediately, unless the statement is in the dynamic statement cache
- For stabilized dynamic SQL statements, after invalidation, free, or changed application compatibility level

Activation of function level 100 introduces all optimization enhancements in the initial Db2 12 release. That is, function level 500 introduces no optimization enhancements.

SQL capabilities
New SQL capabilities become available after the activation of the function level that introduces them or higher, for applications that run at the equivalent application compatibility level or higher. New SQL capabilities in the initial Db2 12 release become available in function level 500 for applications that

© Copyright IBM Corp. 1983, 2024

run at the equivalent application compatibility level or higher. You can continue to run SQL statements compatibly with lower function levels, or previous Db2 releases, including Db2 11 and DB2® 10. For details, see Application compatibility levels in Db2 12 (Db2 Application programming and SQL)

Who should read this information

This information presents reference information for people involved in system administration, database administration, and operation. It presents detailed information on commands, including syntax, option descriptions, and examples for each command.

Db2 Utilities Suite for z/OS

Important: Db2 Utilities Suite for z/OS is available as an optional product. You must separately order and purchase a license to such utilities, and discussion of those utility functions in this publication is not intended to otherwise imply that you have a license to them.

Db2 12 utilities can use the DFSORT program regardless of whether you purchased a license for DFSORT on your system. For more information about DFSORT, see https://www.ibm.com/support/pages/dfsort.

Db2 utilities can use IBM Db2 Sort for z/OS as an alternative to DFSORT for utility SORT and MERGE functions. Use of Db2 Sort for z/OS requires the purchase of a Db2 Sort for z/OS license. For more information about Db2 Sort for z/OS, see Db2 Sort for z/OS documentation.

Related concepts

Db2 utilities packaging (Db2 Utilities)

Terminology and citations

When referring to a Db2 product other than Db2 for z/OS, this information uses the product's full name to avoid ambiguity.

The following terms are used as indicated:

Db2
Represents either the Db2 licensed program or a particular Db2 subsystem.

IBM rebranded DB2 to Db2, and Db2 for z/OS is the new name of the offering that was previously known as "DB2 for z/OS". For more information, see Revised naming for IBM Db2 family products on IBM z/OS platform. As a result, you might sometimes still see references to the original names, such as "DB2 for z/OS" and "DB2", in different IBM web pages and documents. If the PID, Entitlement Entity, version, modification, and release information match, assume that they refer to the same product.

IBM OMEGAMON® for Db2 Performance Expert on z/OS
Refers to any of the following products:

- IBM IBM OMEGAMON for Db2 Performance Expert on z/OS
- IBM Db2 Performance Monitor on z/OS
- IBM Db2 Performance Expert for Multiplatforms and Workgroups
- IBM Db2 Buffer Pool Analyzer for z/OS

C, C++, and C language
Represent the C or C++ programming language.

CICS®
Represents CICS Transaction Server for z/OS.

IMS
Represents the IMS Database Manager or IMS Transaction Manager.

MVS™
Represents the MVS element of the z/OS operating system, which is equivalent to the Base Control Program (BCP) component of the z/OS operating system.

RACF®
Represents the functions that are provided by the RACF component of the z/OS Security Server.

Accessibility features for Db2 for z/OS

Accessibility features help a user who has a physical disability, such as restricted mobility or limited vision, to use information technology products successfully.

Accessibility features

The following list includes the major accessibility features in z/OS products, including Db2 for z/OS. These features support:

- Keyboard-only operation.
- Interfaces that are commonly used by screen readers and screen magnifiers.
- Customization of display attributes such as color, contrast, and font size

Tip: IBM Documentation (which includes information for Db2 for z/OS) and its related publications are accessibility-enabled for the IBM Home Page Reader. You can operate all features using the keyboard instead of the mouse.

Keyboard navigation

For information about navigating the Db2 for z/OS ISPF panels using TSO/E or ISPF, refer to the *z/OS TSO/E Primer*, the *z/OS TSO/E User's Guide*, and the *z/OS ISPF User's Guide*. These guides describe how to navigate each interface, including the use of keyboard shortcuts or function keys (PF keys). Each guide includes the default settings for the PF keys and explains how to modify their functions.

Related accessibility information

IBM and accessibility

See the *IBM Accessibility Center* at http://www.ibm.com/able for more information about the commitment that IBM has to accessibility.

How to send your comments about Db2 for z/OS documentation

Your feedback helps IBM to provide quality documentation.

Send any comments about Db2 for z/OS and related product documentation by email to db2zinfo@us.ibm.com.

To help us respond to your comment, include the following information in your email:

- The product name and version
- The address (URL) of the page, for comments about online documentation
- The book name and publication date, for comments about PDF manuals
- The topic or section title
- The specific text that you are commenting about and your comment

Related concepts
About Db2 12 for z/OS product documentation (Db2 for z/OS in IBM Documentation)
Related reference
PDF format manuals for Db2 12 for z/OS (Db2 for z/OS in IBM Documentation)

How to read syntax diagrams

Certain conventions apply to the syntax diagrams that are used in IBM documentation.

Apply the following rules when reading the syntax diagrams that are used in Db2 for z/OS documentation:

- Read the syntax diagrams from left to right, from top to bottom, following the path of the line.

  The ►►—— symbol indicates the beginning of a statement.

  The ——► symbol indicates that the statement syntax is continued on the next line.

  The ►—— symbol indicates that a statement is continued from the previous line.

  The ——►◄ symbol indicates the end of a statement.
- Required items appear on the horizontal line (the main path).

  ►► *required_item* ►◄

- Optional items appear below the main path.

  ►► *required_item* ┬──────────┬►◄
  └ *optional_item* ┘

  If an optional item appears above the main path, that item has no effect on the execution of the statement and is used only for readability.

  ►► *required_item* ┬ *optional_item* ┬►◄
  └──────────────┘

- If you can choose from two or more items, they appear vertically, in a stack.

  If you *must* choose one of the items, one item of the stack appears on the main path.

  ►► *required_item* ┬─ *required_choice1* ─┬►◄
  └─ *required_choice2* ─┘

  If choosing one of the items is optional, the entire stack appears below the main path.

  ►► *required_item* ┬──────────────────┬►◄
  ├─ *optional_choice1* ─┤
  └─ *optional_choice2* ─┘

  If one of the items is the default, it appears above the main path and the remaining choices are shown below.

  ►► *required_item* ┬─ *default_choice* ─┬►◄
  ├──────────────────┤
  ├─ *optional_choice* ─┤
  └─ *optional_choice* ─┘

- An arrow returning to the left, above the main line, indicates an item that can be repeated.

  ►► *required_item* ┬─┬──────────┬─┬►◄
  │ ▼ │ │
  └─ *repeatable_item* ─┘

  If the repeat arrow contains a comma, you must separate repeated items with a comma.

```
                  ,
                 ◄──┐
                    ▼
▶▶─ required_item ──── repeatable_item ──────▶◀
```

A repeat arrow above a stack indicates that you can repeat the items in the stack.

- Sometimes a diagram must be split into fragments. The syntax fragment is shown separately from the main syntax diagram, but the contents of the fragment should be read as if they are on the main path of the diagram.

```
▶▶─ required_item ─┤ fragment-name ├──▶◀
```

fragment-name

```
▶▶─ required_item ──┬──────────────────┬──▶◀
                    └─ optional_name ──┘
```

- For some references in syntax diagrams, you must follow any rules described in the description for that diagram, and also rules that are described in other syntax diagrams. For example:
  - For *expression*, you must also follow the rules described in Expressions (Db2 SQL).
  - For references to *fullselect*, you must also follow the rules described in fullselect (Db2 SQL).
  - For references to *search-condition*, you must also follow the rules described in Search conditions (Db2 SQL).
- With the exception of XPath keywords, keywords appear in uppercase (for example, FROM). Keywords must be spelled exactly as shown.
- XPath keywords are defined as lowercase names, and must be spelled exactly as shown.
- Variables appear in all lowercase letters (for example, *column-name*). They represent user-supplied names or values.
- If punctuation marks, parentheses, arithmetic operators, or other such symbols are shown, you must enter them as part of the syntax.

Related concepts

Commands in Db2
You can use commands for many tasks that you do to control and maintain Db2 subsystems.

Db2 online utilities (Db2 Utilities)

Db2 stand-alone utilities (Db2 Utilities)

Part 1. About Db2 and related commands

Use the Db2 for z/OS and related commands to execute database administrative functions.

These topics provide detailed reference information for Db2 and related commands, including the environment in which each command is issued, the privileges and authorities that are required to issue each command, syntax and option descriptions, usage information, and examples.

Related tasks

Controlling Db2 operations by using commands (Db2 Administration Guide)

© Copyright IBM Corp. 1983, 2024

Chapter 1. Commands in Db2

You can use commands for many tasks that you do to control and maintain Db2 subsystems.

Privileges and authorization IDs for commands

Commands can be issued by an individual users, by programs that run in batch mode, or by IMS or CICS transactions. The term *process* describes any of these initiators. Db2 processes are represented by a set of identifiers (IDs), which are called authorization IDs. What the process can do with Db2 is determined by the privileges and authorities that are held by its identifiers.

If RACF is active, IDs that issue commands from logged-on MVS consoles or from TSO SDSF must have appropriate RACF authorization for Db2 commands, or the primary authorization IDs must have Db2 authorization to issue commands.

Db2 commands that are issued from a logged-on z/OS console or TSO SDSF can be checked by Db2 authorization using primary and secondary authorization IDs.

You can use Db2 authorization to check Db2 commands that are issued from a DSN session under TSO or DB2I by using primary authorization IDs, secondary authorization IDs, and role, if the commands are running in a trusted context with an associated role.

SQL IDs do not affect most Db2 and related commands.

For more information, see Authorization IDs (Managing Security) and Privileges and authorities (Managing Security).

Command types in Db2

Db2 supports the following different types of commands:

- The TSO command DSN and its subcommands
- Db2 commands
- CICS attachment facility commands
- IMS commands
- Administrative task scheduler commands
- z/OS IRLM commands
- TSO CLISTs

For more information, see Chapter 2, “Command types and environments in Db2,” on page 9.

Syntax rules for Db2 commands

For more information about the conventions for syntax diagrams in the Db2 product documentation, see How to read syntax diagrams (Db2 for z/OS in IBM Documentation).

The syntax of each Db2 command contains the following parts:

Recognition character
Shown as a hyphen throughout this information, with the following exceptions:

- If the command is issued from a z/OS console, the recognition character must be the *command prefix*.

  The command prefix can be up to eight characters. The default is '-DSN1'. However, the majority of examples in this information assume that the command prefix has been defined as a hyphen (-). Examples involving members of a data sharing group demonstrate the use of multi-character

© Copyright IBM Corp. 1983, 2024

command prefixes, such as `-DB1G`. A space between the command prefix and the command is optional. For example, you can use either one of the following formats:

```
-DB1GDIS THREAD(*)
```

```
-DB1G DIS THREAD(*)
```

However, using a space makes it easier for users to identify the command, especially when the command prefix has multiple characters.

- If the command is issued from an IMS terminal, the recognition character must be the command recognition character (CRC). The command recognition character is defined in the IMS SSM PROCLIB member.
- If the command is issued from a CICS terminal or under the DSN command processor, the recognition character must be a hyphen.

Command name
The name of the command. Command names have abbreviations, which are provided in the description of each command.

Operands
Combinations of keywords and parameters that can be specified for the command.

Keywords
Sometimes called command options. Keywords can be required or optional. They must be entered exactly as shown in the descriptions of the commands.

Parameters
A keyword can have zero or more parameters. A parameter list, if present, must be enclosed in parentheses.

Separators
These can be one or more blanks or commas. An open parenthesis marks the beginning of a parameter list; no separator is needed. Optionally, an equal sign can be used to separate a single parameter from its keyword without using parentheses.

The following table lists characters that have special meanings when they are used in Db2 commands.

Table 1. Special meanings of characters in Db2 commands

Character	Meaning in commands
Blank or blanks ( )	A separator. Single blanks and multiple blanks are equivalent, except in strings that are enclosed between apostrophes.
Comma (`,`)	A separator. Single blanks and multiple blanks are equivalent, except in strings that are enclosed between apostrophes.

Table 1. Special meanings of characters in Db2 commands (continued)

Character	Meaning in commands
Apostrophe (')	The usual SQL string constant delimiter, and marks the beginning or end of a string constant in SQL. (In COBOL programs only, the QUOTESQL precompiler option allows you to choose the quotation mark as the SQL string delimiter; the apostrophe is then the SQL escape character.) Letters that are not in string constants are changed to uppercase. Two successive apostrophes in a string constant are changed to one apostrophe. Blanks, commas, equal signs, and parentheses in string constants are treated as literal characters, and are not recognized as separators. Use apostrophes to enclose options that must have lowercase characters. Beware of commands that do not convert lowercase characters to uppercase because entering lowercase letters might cause a JCL error or an abend. Similarly, entering uppercase letters where lowercase is required (UNIX Services, for example) might produce incorrect results. For more information, see Starting a system task from a console (MVS System Commands). An exception exists to the rule about changing letters to uppercase. If the CODED CHARACTER SET option is set to 930 or 5026, the letters are not folded to uppercase, whether in an SQL string constant or not. If a keyword value contains leading or following asterisk (*) or underscore (_) pattern-matching characters, and the characters in the keyword value are enclosed in apostrophes, the leading or following pattern-matching characters must also be enclosed in those apostrophes.
Quotation mark (")	The SQL escape character, and marks the beginning or end of an SQL delimited identifier. (In COBOL programs only, the QUOTESQL precompiler option allows you to choose the apostrophe as the SQL escape character; the double quotation mark is then the SQL string delimiter.) Within a string delimited by quotation marks, two successive quotation marks are changed to one. Other rules are the same as for SQL string constants.
Equal sign (=)	Separates a single parameter from a keyword. Thus, an equal sign is used as a separator for keywords that have only one parameter. An equal sign can be used for keywords with multiple parameters when only one member of the parameter list is specified.
open parenthesis (()	The beginning of a parameter list.
Close parenthesis ())	The end of a parameter list.
Colon (:)	An inclusive range. For example, (A:D) means the same as (A,B,C,D); (1:5) means (1,2,3,4,5). The colon can be used this way only in commands where this operation is specifically permitted.

Table 1. Special meanings of characters in Db2 commands (continued)

Character	Meaning in commands
Asterisk (*)	The meaning depends on the context: ***** A single asterisk as a *keyword-value* indicates "all". For example: `-DISPLAY UTILITY (*)` ****keyword-value*** An asterisk as the first character of a *keyword-value* indicates that a match for the value will be satisfied when all characters following the * are the same. For example: (*BCD) ***beginning-of-keyword-value*end-of-keyword-value*** An intermediate asterisk indicates that a match for the value will be satisfied when all characters preceding and all characters following the asterisk are the same. For example: (ABC*EFG) ***keyword-value**** An asterisk as the final character of a *keyword-value* indicates that a match will for the value will be satisfied when all characters preceding the asterisk are the same. For example: (ABC*) ***beginning-of-keyword-value*middle-of-keyword-value*end-of-keyword-value**** Asterisks used as the first, intermediate and final characters in a string are also valid. For example: (*BCD*FGH*) For example, `DISPLAY UTILITY (*)` displays the status of all utilities; whereas, `DISPLAY UTILITY (R2*)` displays the status of all utilities whose identifiers begin with R2. The asterisk pattern-matching character is available to all Db2 commands, but not all Db2 commands support it. The asterisk can be used this way only in commands in which the pattern-matching operation is specifically supported.
Underscore (_)	Indicates that any character is a match a that position in a keyword value. For example, A_C matches any three-character keyword value with A as the first character and C as the third character.
The two-character string NO	Negates the keyword that follows. A negated keyword means the opposite of the keyword itself, and is often used to override a keyword default. In keywords that have no opposite meaning, the initial characters "NO" can be merely part of the keyword itself; for example, in NODE.

Syntax rules for DSN subcommands

The syntax rules for DSN subcommands conform to standard TSO command parsing conventions. For general information about the syntax of TSO/E commands and subcommands, see TSO/E commands and subcommands.

To continue a subcommand on the next line in the DSN processor, type either a hyphen (-) or a plus sign (+) at the end of the current line. If you use a plus sign, precede it by at least one blank character to prevent the concatenation of character strings from line to line. Using a plus sign causes TSO/E to delete leading delimiters (blanks, commas, tabs, and comments) on the continuation line, and reduces the overall size of the command.

Important: The names of the DSN command and its subcommands cannot be abbreviated. Abbreviations for some keywords are supported for compatibility with prior Db2 releases. However, avoid abbreviating keywords in the DSN command and its subcommand to avoid potential problems.

Data sharing scope of commands

In a data sharing environment, the *scope* of a command is the breadth of its impact among the members of the data sharing group. Many commands used in a data sharing environment have *member (or local) scope* because they affect only the Db2 subsystem for which they are issued. Other commands have *group scope* because they affect an object in such a way that affects all members of the group. For more information, see Command scope in Db2 data sharing (Db2 Data Sharing Planning and Administration) or the "Environment" in the description of each command.

Output from commands

Several factors affect the amount of output you can receive from a Db2 command.

The amount of output that you receive from a Db2 command is always less than 256 KB. The following factors determine the maximum amount of output that is returned:

- The amount of storage available to your Db2 subsystem or to an individual command.
- The environment from which you issue the Db2 command.

  For example, if you issue a Db2 command from an IMS console, you can receive no more than 32 KB of output.
- For DISPLAY DATABASE, the value of the LIMIT keyword. For more information, see Chapter 22, “-DISPLAY DATABASE command (Db2),” on page 213.
- For DISPLAY THREAD, the number of lines of output. DISPLAY THREAD displays at most 254 lines of output. For more information, see Chapter 36, “-DISPLAY THREAD command (Db2),” on page 287.

Recovery logs and commands

All Db2 commands issued after Db2 restart and before Db2 shutdown are logged by Db2. These commands are written in an IFCID 90 trace record with a destination header that is mapped by macro DSNDQWIW. The log record type is 0010 (system event), and the subtype is 0041 (trace record).

Chapter 2. Command types and environments in Db2

Db2 supports several different types of commands that you can use to complete database administration tasks.

The commands are divided into the following categories:

The DSN command and subcommands

DSN is the Db2 command processor and executes as a TSO command processor.

All of the DSN subcommands, except SPUFI, run under DSN in either the foreground or background. All commands except BIND QUERY and END also run under Db2 Interactive (DB2I). SPUFI runs only in the foreground under ISPF.

ABEND (DSN)	The DSN subcommand ABEND causes the DSN session to terminate with abend completion code X'04E' and reason code of X'00C50101'. **Important:** The ABEND subcommand is used for diagnostic purposes only, and is intended to be used only under the direction of IBM Support. Use it only when diagnosing a problem with DSN or Db2.
BIND PACKAGE (DSN)	The DSN subcommand BIND PACKAGE builds an application package. Db2 records the description of the package in the catalog tables and saves the prepared package in the directory. BIND PACKAGE also deletes phased-out package copies.
BIND SERVICE (DSN)	The BIND SERVICE (DSN) subcommand builds an application package that represents a Db2 REST service.
BIND PLAN (DSN)	The DSN subcommand BIND PLAN builds an application plan. All Db2 programs require an application plan to allocate Db2 resources and support SQL requests made at run time.
BIND QUERY (DSN)	The DSN subcommand BIND QUERY reads the statement text, default schema, and a set of bind options from every row of DSN_USERQUERY_TABLE, and information from correlated EXPLAIN table rows. When LOOKUP(NO) is in effect, Db2 inserts the pertinent data into certain catalog tables.
DSN (TSO)	The TSO command DSN starts a DSN session.
END (DSN)	The DSN subcommand END is used to end the DSN session and return to TSO.
FREE PACKAGE (DSN)	The DSN subcommand FREE PACKAGE can be used to delete a specific version of a package, all versions of a package, or whole collections of packages.
FREE SERVICE (DSN)	The FREE SERVICE (DSN) subcommand deletes an application package that represents a Db2 REST service.
FREE PLAN (DSN)	The DSN subcommand FREE PLAN deletes application plans from Db2.
FREE QUERY (DSN)	The DSN subcommand FREE QUERY removes from certain catalog tables for one or more queries. If any of the specified queries are in the dynamic statement cache, FREE QUERY purges them from the dynamic statement cache.

© Copyright IBM Corp. 1983, 2024

Chapter 42, “FREE STABILIZED DYNAMIC QUERY subcommand (DSN),” on page 353	The DSN subcommand FREE STABILIZED DYNAMIC QUERY removes from certain catalog tables one or more stabilized dynamic queries. If any of the specified queries are in the dynamic statement cache, FREE STABILIZED DYNAMIC QUERY also purges the statements from the dynamic statement cache.
DCLGEN (DECLARATIONS GENERATOR) (DSN)	The declarations generator (DCLGEN) produces an SQL DECLARE TABLE statement and a COBOL, PL/I, or C data declaration for a table or a view named in the catalog.
REBIND PACKAGE (DSN)	The DSN subcommand REBIND PACKAGE rebinds an application package when you make changes that affect the package, but have not changed the SQL statements in the program.
REBIND PLAN (DSN)	The DSN subcommand REBIND PLAN rebinds an application plan when you make changes to the attributes of the plan, such as the package list.
REBIND TRIGGER PACKAGE (DSN)	The DSN subcommand REBIND TRIGGER PACKAGE rebinds a package for a basic trigger. You can identify basic triggers by querying the SYSIBM.SYSTRIGGERS catalog table. Blank values in the SQLPL column identify basic triggers. For advanced triggers, use the REBIND PACKAGE command instead.
RUN (DSN)	The DSN subcommand RUN executes an application program, which can contain SQL statements.
SPUFI (DSN)	The DSN subcommand SPUFI executes the SQL processor using file input.

Db2 commands

You can use Db2 commands to control most of the operational environment.

START DB2 commands can be issued only from a z/OSconsole or TSO SDSF. All other Db2 commands can be issued from the following environments:

- z/OS consoles
- TSO terminals, by any of the following methods:
  - Issuing the DSN command from the TSO READY prompt
  - Entering commands in the **DB2 Commands** panel inDB2I
- IMS terminals
- Authorized CICS terminals

You can issue many commands from the background within batch programs, such as the following types of programs:

- z/OS application programs
- Authorized CICS programs
- IMS programs
- APF-authorized programs, such as a terminal monitor program (TMP)
- IFI application programs

Db2 commands that are issued from a logged-on z/OS console or TSO SDSF can be checked by Db2 authorization using primary and secondary authorization IDs. A logged-on z/OS user ID must be defined in RACF or a similar security server.

For detailed descriptions of the Db2 commands, see the commands with names that are preceded by the recognition character "-" and identified by "(Db2)" in Part 1, “About Db2 and related commands,” on page 1.

The *extended MCS console feature* enables a z/OS system have more than 99 consoles. Because Db2 supports extended MCS consoles, messages returned from a Db2 command are routed to the extended MCS console that issued the command.

Message DSN9022I indicates the normal end of Db2 command processing; DSN9023I indicates the abnormal end of Db2 command processing.

IMS commands

You can use the following IMS commands to control IMS connections as well as to start and stop connections to Db2 and display activity on the connections. You can issue IMS commands from an IMS terminal or you can invoke IMS transactions or commands by using the Db2-supplied stored procedures DSNAIMS or DSNAIMS2. DSNAIMS2 has the same functions as DSNAIMS but also provides multi-segment input support for IMS transactions.

For descriptions of the IMS commands, see IMS commands.

/CHANGE (IMS)

Resets an indoubt unit of recovery as identified by the OASN keyword of the /DISPLAY command. That command deletes the item from the standpoint of IMS, but it does not communicate to Db2. For example, issue the following command to reset all indoubt units of recovery for the subsystem named Db2:

```
/CHA SUBSYS DB2 RESET
```

Issue the following command to reset all indoubt units of recovery for all subsystems:

```
/CHA SUBSYS ALL RESET
```

Issue the following command to reset indoubt recovery units with OASN numbers 99, 685, and 2920 for subsystem Db2:

```
/CHA SUBSYS DB2 OASN 99 685 2920 RESET
```

/DISPLAY (IMS)

Displays the status of the connection between IMS and an external subsystem (as well as all application programs communicating with the external subsystem), or the outstanding recovery units that are associated with the subsystem. For example, you can issue the following command to display the status of all connections with IMS:

```
/DISPLAY SUBSYS ALL
```

The result is similar to the following output:

```
SUBSYS    CRC    REGID    PROGRAM    LTERM    STATUS
SSTR      ?                                    CONN
                   1      DDLTLM17   PTERM01  CONN,ACTIVE
                   2      DDLTLM06   PTERM02  CONN
*85202/065933*
```

/SSR (IMS)

Allows the IMS operator to enter an external subsystem command.

/START (IMS)

Makes the connection between IMS and the specified external subsystem available. Establishing the connection allows application programs to access resources managed by the external subsystem.

/STOP (IMS)

With the SUBSYS parameter, prevents application programs from accessing external subsystem resources.

/TRACE (IMS)

Directs and controls the IMS capabilities for tracing internal IMS events. It also starts, stops, and defines the activity to be monitored by the IMS Monitor. For example, the following command starts IMS trace, enables the Db2 trace, and writes IMS trace tables to the IMS log before they wrap:

```
/TRACE SET ON TABLE SUBS OPTION LOG
```

The following command starts IMS tracing, enables all trace tables (including Db2 trace tables); (ALL is the default parameter for the TABLE keyword), and writes IMS trace tables to the IMS log before they wrap.

```
/TRACE SET ON TABLE ALL OPTION LOG
```

CICS attachment facility commands

You can use CICS commands to control CICS connections as well as to start and stop connections to Db2 and display activity on the connections. Each CICS attachment facility command can be issued from a CICS terminal.

Issuing commands to Db2 using the DSNC transaction (CICS Transaction Server for z/OS)
DSNC DISCONNECT (CICS Transaction Server for z/OS)
DSNC DISPLAY (CICS Transaction Server for z/OS)
DSNC STOP (CICS Transaction Server for z/OS)
DSNC STRT (CICS Transaction Server for z/OS)

Administrative task scheduler commands

You can use administrative task scheduler commands to start, stop, and change the administrative task scheduler. All administrative task scheduler commands can be issued from a z/OS console.

Chapter 47, "MODIFY admtproc,APPL=SHUTDOWN command," on page 367	The MODIFY *admtproc*, APPL=SHUTDOWN command stops the administrative task scheduler from accepting requests and starting new task executions. It also shuts down the administrative task scheduler.
Chapter 48, "MODIFY admtproc,APPL=TRACE command," on page 369	The MODIFY *admtproc*, APPL=TRACE command starts or stops traces in the administrative task scheduler.
Chapter 71, "START admtproc command," on page 457	The START *admtproc* command starts the scheduler that is specified in the *admtproc* parameter
Chapter 86, "STOP admtproc command (z/OS)," on page 527	The STOP *admtproc* command stops the administrative task scheduler that is specified in the *admtproc* parameter.

z/OS IRLM commands

You can use z/OS Internal Resource Lock Manager (IRLM) commands to start, stop, and change the IRLM. All z/OS IRLM command can be issued from a z/OS console.

MODIFY irlmproc,ABEND (z/OS IRLM)	The MODIFY *irlmproc*, ABEND command terminates IRLM abnormally. IRLM processes this command even if a Db2 subsystem is identified to it.
MODIFY irlmproc,DIAG (z/OS IRLM)	The MODIFY *irlmproc*, DIAG command initiates diagnostic dumps for IRLM subsystems.)
MODIFY irlmproc,PURGE (z/OS IRLM)	The MODIFY *irlmproc*,PURGE command releases IRLM locks retained due to a Db2, IRLM, or system failure.

MODIFY irlmproc,SET (z/OS IRLM)	The MODIFY *irlmproc*,SET command dynamically sets various IRLM operational parameters
MODIFY irlmproc,STATUS (z/OS IRLM)	The MODIFY *irlmproc*,STATUS command displays information for one or more subsystems connected to the IRLM that is specified using *irlmproc* .

TSO CLISTs

You can use Time Sharing Option (TSO) commands to perform TSO tasks such as prepare and execute programs under TSO.

Related tasks

Controlling Db2 operations by using commands (Db2 Administration Guide)

Submitting work to Db2 (Db2 Administration Guide)

Chapter 3. ABEND (DSN)

The DSN subcommand ABEND causes the DSN session to terminate with abend completion code X'04E' and reason code of X'00C50101'. It is intended to be used at the direction of IBM Support, if a problem is suspected (such as incorrect output) with another DSN subcommand, and the problem does not cause an abend and a dump to be generated.

Important: The ABEND subcommand is used for diagnostic purposes only, and is intended to be used only under the direction of IBM Support. Use it only when diagnosing a problem with DSN or Db2.

Environment

You can use ABEND from DB2I, or from a DSN session under TSO that runs in either the foreground or background.

Data sharing scope: Member

Authorization

None is required.

Syntax

```
►►─ ABEND ─►◄
```

Usage notes

Sometimes, the information dumped is not the information that you want. Always use the ABEND subcommand as soon as possible after a problem is re-created to increase the chances of obtaining meaningful data. Do not press the ATTENTION key before issuing the ABEND subcommand; usually, the data is lost.

Related tasks

ABEND subcommand of the DSN command processor (Diagnosing Db2 problems)

Related reference

DSN command (TSO)
The TSO command DSN starts a DSN session.

Related information

00C50101 (Db2 Codes)

© Copyright IBM Corp. 1983, 2024

Chapter 4. -ACCESS DATABASE command (Db2)

The Db2 command ACCESS DATABASE forces a physical open of a table space, index space, or partition, or removes the GBP-dependent status for a table space, index space, or partition, or externalizes the real-time statistics and optimizer statistics recommendations from in-memory blocks to the appropriate catalog tables. The MODE keyword specifies the desired action.

Abbreviation: -ACC

Environment

This command can be issued from a z/OS console, a DSN session under TSO, a DB2I panel (DB2 COMMANDS), an IMS or CICS terminal, or a program using the instrumentation facility interface (IFI).

Data sharing scope: Group or member

Authorization

To execute this command, you must use a privilege set of the process that includes one of the following authorities:

- STARTDB privilege
- DBMAINT authority
- DBCTRL authority
- DBADM authority
- SYSCTRL authority
- SYSADM authority
- System DBADM authority

When you are using a privilege set that does not contain the STARTDB privilege for a specified database, Db2 issues an error message and the ACCESS command fails.

All specified databases with the STARTDB privilege included in the privilege set of the process are started.

Db2 commands that are issued from a logged-on z/OS console or TSO SDSF can be checked by Db2 authorization using primary and secondary authorization IDs. A logged-on z/OS user ID must be defined in RACF or a similar security server.

When data definition control is active, installation SYSOPR or installation SYSADM authority is required to start a database, a table space, or an index space containing a registration table or index.

© Copyright IBM Corp. 1983, 2024

Syntax

```
►► ACCESS ── DATABASE( ┬─ database-name ─┬─ ) ── SPACENAM ── ( ──►
                       │ (,)            │
                       ├─ *             │
                       ├─ dbname1:dbname2 ─┤
                       ├─ dbname* ──────┤
                       ├─ *dbname ──────┤
                       ├─ *dbname* ─────┤
                       └─ *dbstring1*dbstring2* ─┘

► ┬─ space-name ─┬─ ) ──►
  │ (,)          │
  ├─ *           │
  ├─ spacename1 :spacename2 ─┤
  ├─ spacename* ─────────────┤
  ├─ *spacename ─────────────┤
  ├─ *spacename* ────────────┤
  └─ *spacestring1*spacestring2* ─┘

► ┬──────────────────────────────────────────────┬─ MODE ── ( ──►
  │                                              │
  └─ PART ── ( ┬─ integer ─┬─ ) ─┘
               │ (,)       │
               └─ integer1:integer2 ─┘

► ┬─ OPEN ─┬─ ) ─►◄
  ├─ NGBPDEP ─┤
  └─ STATS ───┘
```

Option descriptions

DATABASE (*database-name*,...)

Specifies the names of the database, or database for the table spaces or index spaces to access.

Abbreviation: DB

database-name

The name of one or more database to access. The following variations are accepted:

(database-name, ...)

Identifies one or more database names, separated by commas or blanks.

(*)

All databases that are defined to the Db2 subsystem for which the privilege set of the process has the required authorization.

(*dbname1*:*dbname2*)

All databases whose names, in UNICODE, are between *dbname1* and *dbname2* inclusive.

(*dbname)**
All databases whose names begin with the string *dbname* that contains 1–7 characters.

(dbname*)**
All databases whose names end with the string *dbname* that contains 1–7 characters.

(dbname**)**
All databases whose names contain the string *dbname*,where *dbname* that contains 1–6 characters.

(dbstring1*dbstring2**)**
All databases whose names contain the strings *dbstring1* and *dbstring2* that together contain a total of 2–5 characters.

SPACENAM(*space-name*, ...)
Indicates names of table spaces or indexes within the specified database to access.

Abbreviation: SPACE, SP

space-name
The name of one or more table spaces or index spaces to access. The following variations are accepted:

(spacename, ...)
One ore more index space names, separated by commas or blanks.

(*)
All table spaces or index spaces that are defined to the Db2 subsystem for which the privilege set of the process has the required authorization.

(*spacename1*:*spacename2*)
All table spaces or index spaces whose names, in UNICODE, are between *spacename1* and *spacename2* inclusive

(*spacename)**
All table spaces or index spaces whose names begin with the string *spacename* that contains 1–7 characters.

(spacename*)**
All table spaces or index spaces whose names end with the string *spacename* that contains 1–7 characters.

(spacename**)**
All table spaces or index spaces whose names contain the string *spacename* that contains 1–6 characters.

(spacestring1*spacestring2**)**
All table spaces or index spaces whose names contain the strings *spacestring1* and *spacestring2* that together contain a total of 2–5 characters.

PART(*integer*,)
Indicates the partition number of one or more partitions, within the specified table space or index, that are to be accessed.

The specified *integer* value must identify a valid partition number for the corresponding space name and database name. If you specify nonvalid partition numbers, you receive an error message for each non-valid number, but all valid partitions that you specified are accessed.

integer can be written to designate one of the following specifications:

- A list of one or more partitions.
- A range of all partition numbers that collate greater than or equal to *integer-1* and less than or equal to *integer-2*.
- A combination of lists and ranges.

PART is valid with partitioned table spaces, partitioned indexes, and nonpartitioned type 2 indexes of partitioned table spaces. If you specify PART with a nonpartitioned table space or index on a nonpartitioned table space, you receive an error message, and the nonpartitioned space is not

accessed. When a logical partition is accessed, the index is not closed. A nonpartitioning index must be accessed without the use of PART to close the index.

MODE(*mode-value*)
Specifies the action for the command, where *mode-value* is one of the following values:

OPEN
Forces the physical opening of the page set or partition on just the local member. This moves the overhead of the physical open from an SQL thread to the command thread. This improves the transaction rate for the first SQL thread to reference a given page set or partition.

When MODE(OPEN) is specified, Db2 does not process objects with the following characteristics:

- The objects are defined with DEFINE NO.
- The physical data sets for the objects have not been created.

NGBPDEP
Removes group buffer pool dependency from the specified page set or partition. Use this before running large batch processes against a particular page set or partition to improve performance in a data sharing environment. Issue this command only on the same member that runs the batch processes. The page set or partition is drained when you specify this keyword.

STATS
Externalizes the in-memory real-time statistics and the optimizer recommendations to the appropriate catalog tables. In data sharing environments, the in-memory statistics are externalized for all members. This mode does not physically open the page sets or change the states of the page sets.

When the MODE (STATS) option is specified, only certain combinations of *database-name* and *space-name* values are recommended.

Usage notes

The following description contains additional information about how to use the ACCESS DATABASE command.

What to do if ACCESS DATABASE returns error message DSNI045I
Issuing ACCESS DATABASE MODE(OPEN) on several members of a data sharing group at the same time might result in error message DSNI045I and reason code 00C90090, due to resource contention. If this error occurs, reissue the ACCESS DATABASE MODE(OPEN) command to open all of the objects that the command affects. To avoid the error, do not issue ACCESS DATABASE MODE(OPEN) on multiple data sharing group members at the same time.

Trace information for commands issued with group scope
If this command is issued with options that specify group scope in a Db2 data sharing member, it also runs on all other active members. IFICID 090 trace records for other group members can show that the same command was issued by the SYSOPR authorization ID from the 016.TLPKN5F correlation ID, in addition to the trace records from the member where the original command was issued. See Command scope in Db2 data sharing (Db2 Data Sharing Planning and Administration).

Examples

Example: Physically opening partitions
This command physically opens partitions 1 and 3 of table space DSN9002 of database DSN9001.

```
-ACCESS DATABASE(DSN9001) SPACENAM(DSN9002) PART(1,3) MODE(OPEN)
```

Example: Physically closing a nonpartitioned table space
This command physically closes the entire nonpartitioned table space DSN9003 of database DSN9001 and makes it non-group bufferpool dependent.

```
-ACCESS DATABASE(DSN9001) SPACENAM(DSN9003) MODE(NGBPDEP)
```

Output similar to the following output indicates that the command completed successfully:

```
  -DSNTDDIS 'ACCESS DATABASE' NORMAL COMPLETION
```

Example: Externalize all in memory statistics to the real-time statistics tables

The following command externalizes all in-memory statistics and optimizer recommended statistics that are currently held in the system to the real-time statistics table.

```
-ACCESS DB(*) SP(*) MODE(STATS)
```

Related concepts

Physical open of a page set of partition (Db2 Data Sharing Planning and Administration)

Inter-Db2 interest and GBP-dependency (Db2 Data Sharing Planning and Administration)

Related tasks

Improving batch processing performance in data sharing (Db2 Data Sharing Planning and Administration)

Setting up your system for real-time statistics (Db2 Performance)

Chapter 5. -ACTIVATE command (Db2)

The Db2 command ACTIVATE enables use of new capabilities and enhancements at the specified function level, and lower function levels. Use of the ACTIVATE command to activate function level 500 or higher also marks the boundary between the ability to coexist with or fallback to Db2 11.

Important: Before you activate function level 500 or higher for the first time, read Activating Db2 12 new function at migration (Db2 Installation and Migration).

On successful completion of the ACTIVATE command, the specified function level and all lower function levels become available for use. Use of the ACTIVATE command requires that the data sharing group contains no active Db2 11 members.

Important: Do not attempt to start Db2 at any code level that is lower than the highest ever activated function level, even at the lower star (*) function level. Activate a function level only after you are satisfied that Db2 can continue to run at the required code level.

Abbreviation:-ACTIVATE FUNCTION LEVEL(*function-level*)

Environment

The ACTIVATE command can be issued from a z/OS console, a DSN session under TSO, a Db2I panel (DB2 COMMANDS), an IMS or CICS terminal, or a program using the instrumentation facility interface (IFI).

Tip: You can tailor and run the DSNTIJAF job to issue the ACTIVATE commands. For more information, see Activating Db2 12 function levels (Db2 for z/OS What's New?).

Data sharing scope: Group

Authorization

To execute the ACTIVATE command, you must use a privilege set that includes the installation SYSADM or installation SYSOPR authority. The installation SYSOPR authority enables you to install or migrate Db2 without access to user objects.

```
►► ACTIVATE FUNCTION LEVEL ── ( ── function-level ── ) ──┬──────────┬──►◄
                                                        └── TEST ──┘
```

Option descriptions

function-level

The function level to activate in the subsystem or data sharing group. The format is V*vv*R*r*M*mmm*, where *vv* is the version, *r* is the release, and *mmm* is the modification level. For example, V12R1M510 identifies function level 510. For a list of all available function levels in Db2 12, see Db2 12 function levels (Db2 for z/OS What's New?).

Activation of a function level succeeds only if the subsystem or every active member in the data sharing group runs at the required code level.

You can specify a higher or lower function level than the current function level. If a lower function level is specified, the star (*) function level is activated in the subsystem or data sharing group. For more information about activating star (*) function levels, see Responding to problems after function level activation (Db2 for z/OS What's New?).

A DSNU757I message indicates successful completion of the command, or the reason why the command was not successful.

TEST

The specified function level is not activated. Instead, the DSNU757I message output indicates the eligibility for the activation of the specified function-level of the subsystem or data sharing

© Copyright IBM Corp. 1983, 2024

group. The message output displays information about any member that prevents activation of the specified function level for the group. The message output displays code, catalog, and function level information for each subsystem or group member.

Important: When you check the readiness of your Db2 environment for a function level, be careful to specify the TEST option with the ACTIVATE command. After any successful completion of the ACTIVATE command without TEST, Db2 must remain at the higher code level. That is, you cannot remove any PTFs that the code level requires, even at a lower star (*) function level. You can also use the DISPLAY GROUP command to determine the highest function level that your Db2 environment supports, without risk of inadvertent function level activation. For more information, see Determining the Db2 code level, catalog level, and function level (Db2 for z/OS What's New?).

Output

Message DSNU757I indicates successful completion of the command, or the reason why the command was not successful.

If a different function level is activated, Db2 also issues message DSNG014I to the console and updates the SYSLEVELUPDATES catalog table.

Usage notes

The availability of new function depends on the type of enhancement, the activated function level, and the application compatibility levels of applications. In the initial Db2 12 release, most new capabilities are enabled only after the activation of function level 500 or higher.

Virtual storage enhancements

Virtual storage enhancements become available at the activation of the function level that introduces them or higher. Activation of function level 100 introduces all virtual storage enhancements in the initial Db2 12 release. That is, activation of function level 500 introduces no virtual storage enhancements.

Subsystem parameters

New subsystem parameter settings are in effect only when the function level that introduced them or a higher function level is activated. Many subsystem parameter changes in the initial Db2 12 release take effect in function level 500. For more information about subsystem parameter changes in Db2 12, see Subsystem parameter changes in Db2 12 (Db2 for z/OS What's New?).

Optimization enhancements

Optimization enhancements become available after the activation of the function level that introduces them or higher, and full prepare of the SQL statements. When a full prepare occurs depends on the statement type:

- For static SQL statements, after bind or rebind of the package
- For non-stabilized dynamic SQL statements, immediately, unless the statement is in the dynamic statement cache
- For stabilized dynamic SQL statements, after invalidation, free, or changed application compatibility level

Activation of function level 100 introduces all optimization enhancements in the initial Db2 12 release. That is, function level 500 introduces no optimization enhancements.

SQL capabilities

New SQL capabilities become available after the activation of the function level that introduces them or higher, for applications that run at the equivalent application compatibility level or higher. New SQL capabilities in the initial Db2 12 release become available in function level 500 for applications that run at the equivalent application compatibility level or higher. You can continue to run SQL statements compatibly with lower function levels, or previous Db2 releases, including Db2 11 and DB2 10. For details, see Application compatibility levels in Db2 12 (Db2 Application programming and SQL)

Trace information for data sharing members

When this command with group scope is issued in a Db2 data sharing member, it also runs on all other active members. IFICID 090 trace records for other group members can show that the

same command was issued by the SYSOPR authorization ID from the 016.TLPKN5F correlation ID, in addition to the trace records from the member where the original command was issued. See Command scope in Db2 data sharing (Db2 Data Sharing Planning and Administration).

Examples

The following examples demonstrate use of the ACTIVATE command to test and activate Db2 12 function levels.

Example: Testing function level activation

GUPI The following command checks whether the subsystem or data sharing group is ready for the specified function level.

```
-ACTIVATE FUNCTION LEVEL (V12R1M500) TEST
```

The DSNU757I message indicates whether the group is ready for the specified level. Because TEST is specified, the output includes detailed information about each active member of the data sharing group. In this example, all of the members are at the required code level and catalog level so that function level 500 can be activated.

```
DSNU757I  -DB2A DSNUGCCA
*** BEGIN ACTIVATE FUNCTION LEVEL (V12R1M500)
                GROUP ELIGIBLE FOR FUNCTION LEVEL (V12R1M500)
                CATALOG LEVEL(V12R1M500)
                CURRENT FUNCTION LEVEL(V12R1M100)
                HIGHEST ACTIVATED FUNCTION LEVEL (V12R1M100)
                HIGHEST POSSIBLE FUNCTION LEVEL(V12R1M500)
-------------------------------------------------------------------
DB2          CURRENT     CAPABLE FUNCTION LEVELS
MEMBER   ID  CODE-LEVEL  LOWEST      HIGHEST     STATUS
-------- --- ----------  ----------  ----------  -------------------
DB2A       1 V12R1M500   V12R1M100   V12R1M500   ELIGIBLE
DB2B       2 V12R1M500   V12R1M100   V12R1M500   ELIGIBLE
DB2C       3 V12R1M500   V12R1M100   V12R1M500   ELIGIBLE
-------------------------------------------------------------------
DSN9022I  -DB2A DSNZACMD '-ACTIVATE FUNC' NORMAL COMPLETION
```

GUPI

Example: Activating function level 500

GUPI The following command attempts to activate function level 500.

```
-ACTIVATE FUNCTION LEVEL (V12R1M500)
```

The DSNU757I message indicates that function level 500 is successfully activated for the data sharing group.

```
DSNU757I  -DB2A DSNUGCCA
*** BEGIN ACTIVATE FUNCTION LEVEL (V12R1M500)
                FUNCTION LEVEL (V12R1M500) SUCCESSFULLY ACTIVATED
                CATALOG LEVEL(V12R1M500)
                CURRENT FUNCTION LEVEL(V12R1M500)
                HIGHEST ACTIVATED FUNCTION LEVEL (V12R1M100)
                HIGHEST POSSIBLE FUNCTION LEVEL(V12R1M500)
DSN9022I  -DB2A DSNZACMD '-ACTIVATE FUNC' NORMAL COMPLETION
```

GUPI

Example: Activating function level 502

The following command attempts to activate function level 502.The DSNU757I message indicates that function level 502 is successfully activated for the data sharing group.

```
DSNU757I  -DB2A DSNUGCCA
*** BEGIN ACTIVATE FUNCTION LEVEL (V12R1M502)
                FUNCTION LEVEL (V12R1M502) SUCCESSFULLY ACTIVATED
                CATALOG LEVEL(V12R1M502)
                CURRENT FUNCTION LEVEL(V12R1M500)
                HIGHEST ACTIVATED FUNCTION LEVEL (V12R1M500)
```

```
                HIGHEST POSSIBLE FUNCTION LEVEL(V12R1M502)
DSN9022I  -DB2A DSNZACMD '-ACTIVATE FUNC' NORMAL COMPLETION
```

Example: Attempting to activate a function level with ineligible members

GUPI For example the following command attempts to activate the specified function level.

```
-ACTIVATE FUNCTION LEVEL (V12R1M500)
```

The DSNU757I message indicates that the group is not yet ready for the activation of function level 500. The example subsystem is being migrated from Db2 11. One or more members is not at the required code level.

```
DSNU757I  -DB2A DSNUGCCA
*** BEGIN ACTIVATE FUNCTION LEVEL (V12R1M500)
                GROUP NOT ELIGIBLE FOR FUNCTION LEVEL (V12R1M500)
                MEMBER(S) NOT STARTED WITH REQUIRED CODE LEVEL
                CATALOG LEVEL(V12R1M500)
                CURRENT FUNCTION LEVEL(V12R1M100)
                HIGHEST ACTIVATED FUNCTION LEVEL (V12R1M100)
                HIGHEST POSSIBLE FUNCTION LEVEL(V12R1M100)
-------------------------------------------------------------------
DB2          CURRENT     CAPABLE FUNCTION LEVELS
MEMBER   ID  CODE-LEVEL  LOWEST      HIGHEST     STATUS
-------- --- ----------  ----------  ----------  -------------------
DB2       1 V12R1M500   V12R1M100   V12R1M500   ELIGIBLE
DB2B      2 V11R1M500   V11R1M500   V12R1M100   NOT ELIGIBLE
DB2C      3 V12R1M500   V12R11M100   V12R1M500   ELIGIBLE
-------------------------------------------------------------------
DSN9022I  -DB2A DSNZACMD '-ACTIVATE FUNC' NORMAL COMPLETION
```

GUPI

Example: Activating a lower (*) function level

GUPI Assuming that the subsystem or data sharing group is at function level 500, the following command reverts the subsystem or group to function level 100*

```
-ACTIVATE FUNCTION LEVEL (V12R1M100)
```

The DSNU757I message indicates that function level 100* is activated.

```
DSNU757I  -DB2A DSNUGCCA
*** BEGIN ACTIVATE FUNCTION LEVEL (V12R1M100)
                FUNCTION LEVEL (V12R1M100) SUCCESSFULLY ACTIVATED
                CATALOG LEVEL(V12R1M500)
                CURRENT FUNCTION LEVEL(V12R1M100*)
                HIGHEST ACTIVATED FUNCTION LEVEL (V12R1M500)
                HIGHEST POSSIBLE FUNCTION LEVEL(V12R1M500)
DSN9022I  -DB2A DSNZACMD '-ACTIVATE FUNC' NORMAL COMPLETION
```

GUPI

Related concepts

Migrating to Db2 12 (Db2 Installation and Migration)

Related tasks

Adopting new capabilities in Db2 12 continuous delivery (Db2 for z/OS What's New?)

Activating Db2 12 new function at migration (Db2 Installation and Migration)

Related information

DSNU757I (Db2 Messages)

DSNG014I (Db2 Messages)

Chapter 6. -ALTER BUFFERPOOL command (Db2)

The Db2 command ALTER BUFFERPOOL alters attributes for active or inactive buffer pools. Altered values are used until altered again.

Abbreviation: -ALT BPOOL

Environment

This command can be issued from a z/OS console, a DSN session under TSO, a DB2I panel (DB2 COMMANDS), an IMS, or CICS terminal, or a program using the instrumentation facility interface (IFI).

Data sharing scope: Member

Authorization

To issue this command, you must use a set of privileges for the process that includes one of the following authorities:

- SYSOPR authority
- SYSCTRL authority
- SYSADM authority

Db2 commands that are issued from a logged-on z/OS console or TSO SDSF can be checked by Db2 authorization using primary and secondary authorization IDs. A logged-on z/OS user ID must be defined in RACF or a similar security server.

© Copyright IBM Corp. 1983, 2024

Syntax

```
►►─ ALTER BUFFERPOOL ─── (bpname) ──┬──────────────────────────────┬──►
                                    └─ VPSIZE( integer) ───────────┘

►─┬─ VPSIZEMIN( ──┬─ * ─────┬── ) ─┬─ VPSIZEMAX( ──┬─ * ─────┬── ) ─┬──►
  │               └─ integer ─┘      │                └─ integer ─┘      │
  └─ FRAMESIZE( ──┬─ 4K ──┬── ) ─┬─ VPSEQT( integer) ─┘
                  ├─ 1M ──┤      │
                  └─ 2G ──┘      │

►─┬─ VPPSEQT( integer) ─┬─ DWQT( integer) ─┬─ VDWQT( integer1,integer2) ─┬──►
  │                     │                  │                             │

►─┬─ PGSTEAL( ──┬─ LRU ──┬── ) ─┬─ PGFIX( ──┬─ NO ──┬── ) ─┬──►
  │             ├─ FIFO ─┤      │            └─ YES ─┘      │
  │             └─ NONE ─┘      │
  │                             │
  │                             │

►─┬─ AUTOSIZE( ──┬─ NO ──┬── ) ─┬─ SPSIZE( integer) ─┬──►
  │              └─ YES ─┘      │                    │
  │                             │

►─┬─ SPSEQT( integer) ─┬──►◄
  │                    │
```

Option descriptions

(*bpname*)

Specifies the buffer pool to alter.

- 4 KB page buffer pools are named BP0 through BP49
- 8 KB page buffer pools are named BP8K0 through BP8K9
- 16 KB page buffer pools are named BP16K0 through BP16K9
- 32 KB page buffer pools are named BP32K through BP32K9

VPSIZE (*integer*)

Changes the buffer pool size.

The value of *integer* specifies the number of buffers to allocate to the active buffer pool.

The value of *integer* can range 0–4000000000 for 4 KB page buffer pools other than BP0. For BP0, the minimum value is 2000. For 8 KB page buffer pools, the minimum value is 1000. For 16 KB page buffer pools, the minimum value is 500. For 32 KB page buffer pools, the minimum value is 250.

Db2 limits the sum of VPSIZE and SPSIZE for all buffer pools to 16 TB. In addition, Db2 limits the sum of buffer pool storage and simulated buffer pool storage to the smaller of the following values:

- Twice the available real storage in the z/OS system
- 16TB

When you set VPSIZE to 0 for an active buffer pool, the Db2 database manager quiesces all current database access and update activities for that buffer pool, and then deletes the buffer pool.

Subsequent attempts to use table spaces or indexes that are assigned to that buffer pool fail. In addition, when you set VPSIZE to 0, and a simulated buffer pool is allocated, the database manager deletes the simulated buffer pool.

VPSIZEMIN (*integer*|*)
Sets the minimum size for the buffer pool. Possible values are:

*****

Indicates that Db2 sets the minimum value to 75% of the current size. * is the default.

integer
Specifies the minimum number of buffers to allocate to the active buffer pool when AUTOSIZE(YES) is in effect. The following rules apply to *integer*:

- For buffer pools other than BP0, BP8K0, BP16K0, or BP32K, the value of *integer* for VPSIZEMIN must be less than or equal to the value of *integer* for VPSIZE. The value of VPSIZEMIN cannot be 0.
- For buffer pools BP0, BP8K0, BP16K0, or BP32K, valid ranges for *integer* are:

Buffer pool page size	Range for *integer*
4 KB	2000–4000000000
8 KB	1000–2000000000
16 KB	500–1000000000
32 KB	250–500000000

Abbreviation: VPMIN

VPSIZEMAX (*integer*|*)
Sets the maximum size for the buffer pool. Possible values are:

*****

Indicates that Db2 sets the maximum value to 125% of the current size. Each time that the buffer pool is allocated or reallocated, if automatic buffer pool management is enabled and the buffer pool size increases, the maximum size of the buffer pool is 125% of the new, larger buffer pool size.

* is the default.

integer
Specifies the maximum number of buffers to allocate to the active buffer pool when AUTOSIZE(YES) is in effect. The following rules apply to *integer*:

- For buffer pools other than BP0, BP8K0, BP16K0, or BP32K, the value of *integer* for VPSIZEMAX must be greater than or equal to the value of *integer* for VPSIZE. The value of VPSIZEMAX cannot be 0.
- For buffer pools BP0, BP8K0, BP16K0, or BP32K, *integer* has the following range:

Buffer pool page size	Range for *integer*
4 KB	2000–4000000000
8 KB	1000–2000000000
16 KB	500–1000000000
32 KB	250–500000000

Abbreviation: VPMAX

FRAMESIZE(4K|1M|2G)
Sets the frame size for the buffer pool. Possible values are 2G, 1M, or 4K.

If you issue the ALTER BUFFERPOOL command with the FRAMESIZE option to modify the frame size for a buffer pool, the change is pending, and the buffer pool becomes fixed only at the next allocation.

If FRAMESIZE is 1M, and PGFIX is NO, Db2 uses 4 KB frames.

The frame size can be changed to 2 GB only if 2 GB of real memory is available. In addition, 2 GB of buffer storage must be available. If 2 GB frames cannot be allocated, Db2 allocates 1 MB frames.

PGSTEAL(NONE) and FRAMESIZE(2G) are not compatible in Db2 12. If you specify these options together, Db2 issues message DSNB549I and uses the PGSTEAL(LRU) algorithm until the next allocation of the buffer pool. However, PGSTEAL(NONE) is recorded in the BSDS. To use PGSTEAL(NONE), specify FRAMESIZE(1M) or FRAMESIZE(4K). For more information, see "Changed behavior for PGSTEAL(NONE) buffer pools" in Storage release incompatibilities in Db2 12 (Db2 for z/OS What's New?).

The following examples demonstrate the number of 2 GB frames that are allocated for various VPSIZE values and 4 KB buffer pools. This information is subject to change, and is intended only to give an approximate idea of the way that frames are allocated.

VPSIZE	Number of 2 GB frames allocated	Comment
100	0	The amount of storage that is available is less than 2 GB, and is less than the internally defined limit for rounding up to 2 GB.
498688	1	The amount of storage that is available is less than 2 GB, but is within an internally defined limit for rounding up to 2 GB.
524288	1	The amount of storage that is available is exactly 2 GB.
549888	1	The amount of storage that is available is greater than 2 GB, and less than an internally defined limit for rounding up to 4 GB.

Abbreviation: FRAME

VPSEQT (*integer*)

Changes the sequential steal threshold for the buffer pool.

This threshold is a percentage of the buffer pool that might be occupied by sequentially accessed pages. The pages can be in any state: updated, in-use, or available.

The getpage operations for a transaction are classified as sequential if the transaction attempts to prefetch the pages. The buffers that contain those pages are governed by VPSEQT, which makes them more likely to be stolen or demoted out of the buffer pool than buffers that are not governed by VPSEQT. A random buffer can never be reclassified as sequential, but a sequential buffer that is touched by a random getpage operation is classified as random.

The value of *integer* specifies the sequential steal threshold for the buffer pool. This value is expressed as a percentage of the total buffer pool size. The value of *integer* must be 0–100, inclusive. The default value is 80.

The sequential steal threshold:

- Prevents a sequential scan, a disorganized index scan, or certain other prefetch operations from overwhelming the buffer pool
- Helps reduce synchronous I/O by favoring random pages
- Affects the allocation of buffers and least-recently used (LRU) algorithms

If PGSTEAL(LRU) is specified for a buffer pool, and the number of sequential buffers in the pool is less than the VPSEQT value, Db2 steals the oldest buffer. When the number of sequential buffers in the pool is greater than the VPSEQT value, Db2 steals the oldest sequential buffer.

Buffers that are classified as sequential are stolen more quickly than buffers that are classified as random because VPSEQT limits the number of sequential buffers. Therefore, Db2 uses random buffers more than sequential buffers to reduce the frequency of synchronous I/O. As a result, Db2 might use more asynchronous prefetch I/O. Db2 classifies a buffer as sequential when a buffer is allocated for one of the following purposes:

- For use by Db2 prefetch
- For reading a LOB

  Buffers for reading LOBs are classified as sequential because LOB pages are less likely to be referenced again than other types of pages.
- When a Db2 utility is writing a new Db2 data set sequentially

Db2 might also reclassify a sequential buffer as a random buffer if a random getpage operation touches a sequential buffer.

Setting VPSEQT to 0 disables prefetch. Any sequentially accessed pages are discarded when the number of available buffers is exceeded by the number of objects that are accessed. You can set VPSEQT to 0 to avoid unnecessary prefetch scheduling when the pages are already in the buffer pool, such as in the case of in-memory indexes or data. However, setting VPSEQT to 0 might disable parallelism. You can achieve the same result, and use fewer system resources, by specifying PGSTEAL(NONE).

To avoid accelerated LRU demotion, increase the value of VPSEQT to 99 or 100. You might need to increase the value if it is likely that prefetched pages are referenced more than one time, especially if the additional references are random getpage operations.

To encourage faster LRU demotion of the sequential pages, lower the VPSEQT value. However, if VPSEQT × VPSIZE is less than 160 MB, sequential I/O performance is reduced because a smaller value lowers the amount of sequential prefetch and I/O that is used by queries and utilities.

VPPSEQT (*integer*)
Changes the parallel sequential threshold for the buffer pool. This threshold determines how much of the buffer pool is used for parallel processing operations.

The value of *integer* specifies the parallel sequential threshold for the buffer pool. This value is expressed as a percentage of the sequential steal threshold, and valid values range 0–100. The initial default value is 50.

When VPPSEQT=0, parallel processing operations and prefetch operations that are triggered by index I/O parallelism are disabled.

VPXPSEQT (*integer*)
Sysplex query parallelism is no longer supported. Specifying this parameter has no effect.

DWQT (*integer*)
Changes the buffer pool's deferred write threshold.

The value of *integer* specifies the deferred write threshold for the buffer pool. This value is expressed as a percentage of the total buffer pool size, and valid values range 0–90. This threshold determines when deferred writes begin, based on the number of unavailable buffers. When the count of unavailable buffers exceeds the threshold, deferred writes begin. The initial default value is 30 percent.

VDWQT (*integer-1*,*integer-2*)
Changes the buffer pool's vertical deferred write threshold.

The value of *integer1* specifies the vertical deferred write threshold for the buffer pool. *integer1* is expressed as a percentage of the total buffer pool size, and valid values range 0–90.

This threshold determines when deferred writes begin, based on the number of updated pages for a particular data set. Deferred writes begin for that data set when the count of updated buffers for a data set exceeds the threshold. This threshold can be overridden for page sets accessed by Db2 utilities. It must be less than or equal to the value specified for the DWQT option.

The default value is 5 percent. A value of 0 indicates that the deferred write of 32 pages begins when the updated buffer count for the data set reaches 40.

The value of *integer-2* specifies the vertical deferred write threshold for the buffer pool. *integer-2* is expressed as an absolute number of buffers. You can use *integer2* when you want a relatively low threshold value for a large buffer pool, but *integer-1* cannot provide a fine enough granularity between *integer-1* values of 0 and 1. The value of *integer-2* applies only when the value of *integer-1* is 0. Db2 ignores a value that is specified for *integer-2* if the value specified for *integer-1* is non-zero. The value of *integer-2* can range 0–9999. The default value is 0.

If the value of *integer-1* is 0 and *integer-2* is a non-zero value, Db2 uses the value that is specified for *integer-2* to determine the threshold. If both values are 0, the *integer-1* value of 0 is used as the threshold.

PGSTEAL

Specifies the page-stealing algorithm that Db2 uses for the buffer pool.

The initial default is PGSTEAL(LRU).

(LRU)

Specifies that the buffer pool buffers are managed according to the rules of a least recently used (LRU) algorithm.

Simulated buffer pools can be used only when PGSTEAL is set to LRU.

(FIFO)

Specifies that the buffer pool buffers are managed according to the rules of a first-in-first-out (FIFO) algorithm. This option reduces the cost of maintaining the information about which buffers are least-recently used.

(NONE)

Specifies that no page stealing occurs if the buffer pool is large enough to contain all assigned open objects. Under this option, Db2 pre-loads the buffer pools when the objects are opened. Db2 implicitly creates an overflow area for pages that do not fit in the buffer pool. The overflow area is created when the buffer pool is allocated. The size of the overflow area is based on the VPSIZE value for the buffer pool. The overflow area is generally 10 percent of the VPSIZE value in the range of 50–6400 buffers. Db2 issues message DSNB604I message when the overflow area is used. Page stealing can occur in the overflow area. LRU chains are maintained for the overflow area, but buffer stealing in the overflow area uses the FIFO page-stealing algorithm.

In a data sharing environment, after a page set or partition becomes non-GBP dependent and GBP dependent again, high levels of synchronous read I/O activity might occur. Resolving synchronous read I/O problems in data sharing environments (Db2 Data Sharing Planning and Administration) offers suggestions for how to resolve this performance problem. If VPSEQT=100, Db2 automatically does a prefetch of the object into the buffer pool, which can reduce the synchronous read I/O activity after these transitions occur.

PGFIX

Specifies whether the buffer pool is fixed in real storage when it is used.

(NO)

Specifies that the buffer pool is not fixed in real storage. Page buffers are fixed and unfixed in real storage across each I/O and group buffer pool operation.

This value is the default.

If PGFIX is set to NO, Db2 uses a 4 KB frame size.

(YES)
Specifies that the buffer pool is fixed in real storage.

If you use the ALTER BUFFERPOOL command with the PGFIX option set to YES to fix a buffer pool in real storage, the change is pending, and the buffer pool becomes fixed only at the next allocation.

AUTOSIZE
Specifies whether the buffer pool adjustment is turned on or off.

(NO)
Specifies that Db2 does not use Workload Manager (WLM) services for automatic buffer pool size adjustment.

This value is the default.

(YES)
Specifies that Db2 uses WLM services, if available, to automatically adjust the buffer pool size as appropriate.

For z/OS 2.1 or later, automatic buffer pool management increases or decreases the buffer pool sizes. For z/OS 2.1 or earlier, automatic buffer pool management only increases the buffer pool sizes. If you use one of those versions of z/OS, you might need to manually reduce the size of a buffer pool that becomes too large.

When PGSTEAL(NONE) is used, AUTOSIZE(YES) is ignored. However, the AUTOSIZE attribute is saved. If the PGSTEAL attribute is later changed to something other than NONE, the AUTOSIZE(YES) attribute takes effect again when the buffer pool is reallocated with the new PGSTEAL attribute.

SPSIZE (*integer*)
Causes Db2 to simulate buffer pool behavior when the buffer pool size is increased by *integer*.

The value of *integer* specifies the number of buffers that are to be added to VPSIZE for the simulation. For example, if VPSIZE is currently 5000 buffers, set SPSIZE to 1000 to see what happens if you increase the buffer pool size by 20%.

Db2 limits the sum of VPSIZE and SPSIZE for all buffer pools to 16 TB. In addition, Db2 limits the sum of buffer pool storage and simulated buffer pool storage to the smaller of the following values:

- Twice the available real storage in the z/OS system
- 16TB

The minimum value of *integer* depends on the buffer pool page size. The maximum value of *integer* depends on the buffer pool page size and VPSIZE.

The following table shows the minimum and maximum values for SPSIZE:

Buffer pool page size (KB)	Minimum value for SPSIZE	Maximum value for SPSIZE
4	200	4000000000 - VPSIZE
8	100	2000000000 - VPSIZE
16	50	1000000000 - VPSIZE
32	25	500000000 - VPSIZE

If you specify SPSIZE(0) for a simulated buffer pool, Db2 quiesces all activity for the simulated buffer pool, and then deletes the simulated buffer pool. If a simulated buffer pool is active, and you specify a value for SPSIZE that is smaller than the current size but greater than 0, Db2 deletes the current simulated buffer pool and allocates a new simulated buffer pool with the smaller size.

SPSEQT (*integer*)
Changes the sequential steal threshold for the simulated buffer pool.

This threshold is the percentage of the total simulated buffer pool size that is used for sequentially accessed pages. In the simulated buffer pool, a simulated buffer is classified as sequential if the page was in a sequential buffer in the virtual buffer pool when the page was logically moved into the simulated buffer pool from the virtual buffer pool.

The value must be in the range 0–100. The initial default value is the value of VPSEQT, which is the sequential steal threshold for the virtual buffer pool. The initial default value is set when the SPSIZE is altered to a value greater than zero, if SPSEQT was never specified before.

When Db2 steals a buffer in the simulated buffer pool, if the percentage of sequential buffers to total buffers in the simulated buffer pool is greater than the SPSEQT value, Db2 steals the oldest sequential buffer. Otherwise, Db2 steals the oldest buffer.

Usage notes

The following description contains additional information about how to use the ALTER BUFFERPOOL command.

Changing several buffer pool attributes
A failure to modify one buffer pool attribute has no effect on other modifications that are requested in the same command.

Contracting an active buffer pool
If you use ALTER BUFFERPOOL to contract the size of an active buffer pool, Db2 contracts the pool by marking active buffers as "to be deleted," which means that they are not reusable to satisfy other page requests. However, the virtual storage might not be freed immediately. Determine the status of the buffer pool by issuing the DISPLAY BUFFERPOOL command.

Important: To avoid a major performance impact when you contract an active buffer pool, follow these guidelines:

- Do not lower the size of an active buffer pool by a large amount when there is a significant amount of buffer pool activity in the subsystem. Issue DISPLAY BUFFERPOOL to determine the amount of activity before you attempt to contract the buffer pool.
- If you need to do a very large buffer pool contraction, issue ALTER BUFFERPOOL several times to do multiple smaller contractions, instead of one large contraction.

Deleting an active buffer pool
If you use ALTER BUFFERPOOL to delete an active buffer pool (by specifying 0 for VPSIZE), Db2 issues a message to indicate that it is ready to explicitly delete this buffer pool. When Db2 accepts the delete buffer pool request, the buffer pool is marked as "delete pending". All current access to the buffer pool is quiesced, later access attempts fail with an error message, and all open page sets that refer to the buffer pool are closed.

Altering attributes that are stored in the BSDS
The buffer pool attributes that are stored in the BSDS cannot be changed offline.

Setting a buffer pool to be fixed in real storage
In order to fix the buffer pool in real storage, issue the command `ALTER BUFFERPOOL(`*bpname*`) PGFIX(YES)`. If the buffer pool that you specify for *bpname* is not currently allocated, the buffer pool becomes fixed in real storage when it is allocated. If the buffer pool that you specify for *bpname* is currently allocated, do one of the following procedures to fix the buffer pool in real storage:

- If the buffer pool that you specify for *bpname* is not one of the buffer pools that is used for the Db2 catalog and directory (BP0, BP8K0, BP16K0, or BP32K):
  1. Issue the ALTER BUFFERPOOL command with the VPSIZE option set to 0 to deallocate the buffer pool:

```
-ALTER BUFFERPOOL(
bpname
) VPSIZE(0)
```

2. Issue the ALTER BUFFERPOOL command with the VPSIZE and PGFIX options to change the buffer pool size and to use long-term page-fixing at the next allocation:

```
-ALTER BUFFERPOOL(
bpname
) VPSIZE(
vpsize
) PGFIX(YES)
```

- If the buffer pool that you specify for *bpname* is one of the buffer pools that is used for the Db2 catalog and directory (BP0, BP8K0, BP16K0, or BP32K):

  1. Issue the ALTER BUFFERPOOL command with the PGFIX option to change the buffer pool to use long-term page fixing (the change is pending until the next allocation of the buffer pool):

```
-ALTER BUFFERPOOL(
bpname
) PGFIX(YES)
```

  2. Issue the STOP DATABASE command or the STOP DB2 command to deallocate the buffer pool
  3. Issue the START DATABASE command or the START DB2 command to reallocate the buffer pool (depending on which command you used to deallocate the buffer pool)

Requirements for simulated buffer pools

You can allocate simulated buffer pools to determine the best buffer pool sizes for your database system. When you issue ALTER BUFFERPOOL to create simulated buffer pools, the following conditions must be met:

- SPSIZE is greater than 0.
- The virtual buffer pool is allocated. This means that you set VPSIZE to a value greater than 0 when you previously issued ALTER BUFFERPOOL, or you set VPSIZE to a value greater than 0 when you issue ALTER BUFFERPOOL to create the simulated buffer pool.
- PGSTEAL must be LRU.

  If the value of SPSIZE is greater than 0, and you set PGSTEAL to NONE or FIFO, the Db2 database manager sets SPSIZE to 0. If the simulated buffer pool is already allocated, the database manager deletes it. If the value of PGSTEAL is NONE or FIFO, and you issue ALTER BUFFERPOOL to set the SPSIZE value from 0 to a value greater than 0, the SPSIZE value is not changed.

Restriction on changing VPSIZE during buffer pool simulation

Do not set VPSIZE to 0 while you are doing buffer pool simulation. Setting VPSIZE to 0 deallocates real and simulated buffer pools, even if the SPSIZE value is greater than 0.

Prerequisite for FRAMESIZE(2G)

Before you can use 2 GB page frames, you must configure a 2 GB frame area after the initial program load (IPL) of z/OS. To do that, you need to specify parameter keywords in the LFArea keyword in the active IEASYS*xx* member of SYS1.PARMLIB to specify the amount of real storage that is to be used for 1 MB and 2 GB pages.

Examples

Example: Setting the buffer pool size

This command sets the size of buffer pool BP0 to 2000.

```
-ALTER BUFFERPOOL(BP0) VPSIZE(2000)
```

Example: Setting the minimum and maximum buffer pool size

This command sets the minimum size of buffer pool BP32K to 1500, and the maximum size of buffer pool BP32K to 2500.

```
-ALTER BUFFERPOOL(BP32K) VPSIZEMIN(1500) VPSIZEMAX(2500)
```

Example: Setting the sequential steal threshold of a buffer pool

This command sets the sequential steal threshold of buffer pool BP0 to 75% of the buffer pool size.

```
-ALTER BUFFERPOOL(BP0) VPSEQT(75)
```

Example: Deleting a buffer pool

This command deletes buffer pool BP1.

```
-ALTER BUFFERPOOL(BP1) VPSIZE(0)
```

Use this option carefully because specifying a 0 size for an active buffer pool causes Db2 to quiesce all current database access. All subsequent requests to open page sets fail.

Related concepts

Buffer pool thresholds (Db2 Performance)

Related tasks

Choosing a page-stealing algorithm (Db2 Performance)

Fixing a buffer pool in real storage (Db2 Performance)

Chapter 7. -ALTER GROUPBUFFERPOOL command (Db2)

The Db2 command ALTER GROUPBUFFERPOOL alters attributes of group buffer pools.

Abbreviation

-ALT GBPOOL

Environment

This command can be issued from a z/OS console, a DSN session under TSO, a DB2I panel (DB2 COMMANDS), an IMS or CICS terminal, or a program using the instrumentation facility interface (IFI).

Data sharing scope: Group

Authorization

To execute this command, you must use a privilege set of the process that includes one of the following authorities:

- SYSOPR authority
- SYSCTRL authority
- SYSADM authority

Db2 commands that are issued from a logged-on z/OS console or TSO SDSF can be checked by Db2 authorization using primary and secondary authorization IDs. A logged-on z/OS user ID must be defined in RACF or a similar security server.

Syntax

```
>>- ALTER GROUPBUFFERPOOL --( --+-------------+-- gbpname --+-------------+-- )-->
                               |                            |
                               +-- structure-name --+-------+

>--+-------------------------------------------------------------------------------+-->
   |                                                                               |
   |  +-------------------------------------------------------------------------+  |
   |  |                                                                         |  |
   |  |  +-------------------------------------------------------------------+  |  |
   |  |  |                                                                   |  |  |
   |  |  |  +-------------------------------------------------------------+  |  |  |
   |  |  |  |                                                             |  |  |  |
   |  |  |  |  +-------------------------------------------------------+  |  |  |  |
   |  |  |  |  |                                                       |  |  |  |  |
   |  |  |  |  |  +-------------------------------------------------+  |  |  |  |  |
   |  |  |  |  |  |                                                 |  |  |  |  |  |
   |  |  |  |  |  |  +-------------------------------------------+  |  |  |  |  |  |
   |  |  |  |  |  |  |                                           |  |  |  |  |  |  |
   |  |  |  |  |  |  |  +-------------------------------------+  |  |  |  |  |  |  |
   |  |  |  |  |  |  |  |                                     |  |  |  |  |  |  |  |
   |  |  |  |  |  |  |  |  +-------------------------------+  |  |  |  |  |  |  |  |
   |  |  |  |  |  |  |  |  |                               |  |  |  |  |  |  |  |  |
   |  |  |  |  |  |  |  |  |  +-------------------------+  |  |  |  |  |  |  |  |  |
   |  |  |  |  |  |  |  |  |  |                         |  |  |  |  |  |  |  |  |  |
   |  |  |  |  |  |  |  |  |  |  +-------------------+  |  |  |  |  |  |  |  |  |  |
   |  |  |  |  |  |  |  |  |  |  |                   |  |  |  |  |  |  |  |  |  |  |
   |  |  |  |  |  |  |  |  |  |  |  +-------------+  |  |  |  |  |  |  |  |  |  |  |
   |  |  |  |  |  |  |  |  |  |  |  |             |  |  |  |  |  |  |  |  |  |  |  |
   |  |  |  |  |  |  |  |  |  |  |  |  +-------+  |  |  |  |  |  |  |  |  |  |  |  |
   |  |  |  |  |  |  |  |  |  |  |  |  |       |
```

- 32-KB group buffer pools are named GBP32K through GBP32K9

(*structure-name*)
Specifies the coupling facility structure for the group buffer pool. The coupling facility structure name has the format, `groupname_gbpname`.

groupname is the Db2 data sharing group name and the underscore (_) separates *groupname* and *gbpname*.

GBPCACHE
Specifies whether *gbpname* is to be used for both caching data and cross-invalidation, or just for cross-invalidation.

(YES)
Indicates that *gbpname* is used for caching data and cross-invalidation.

Any no-data-caching attribute that is specified at either the page set or group buffer pool level takes precedence over a caching specification. The following table illustrates the precedence of a no-data-caching specification.

Table 2. Precedence of a no-data-caching specification

Group buffer pool specification	Page set specification	Attribute that takes precedence
GBPCACHE(NO)	GBPCACHE CHANGED GBPCACHE ALL	GBPCACHE(NO)
GBPCACHE(YES)	GBPCACHE NONE	GBPCACHE NONE

(NO)
Indicates that *gbpname* is used only for cross-invalidation. This group buffer pool contains no data entries. The GBPCACHE option of table spaces or index spaces that use this group buffer pool is ignored.

AUTOREC
Specifies whether automatic recovery by Db2 takes place when a structure failure occurs or when the connectivity of all members of the group to the group buffer pool is lost.

(YES)
Enables Db2 to automatically recover page sets and partitions that have a status of group buffer pool RECOVER pending (GRECP) and that have pages on the logical page list.

(NO)
Disables automatic recovery. Issue a START DATABASE command to recover page sets and partitions that have a status of GRECP or that have pages on the logical page list.

RATIO (*ratio*)
Changes the ratio of the number of directory entries to the number of data pages in the group buffer pool; that is, how many directory entries exist for each data page.

ratio can be a decimal number from 1.0 to 1024, inclusive. Any digits after the first decimal place are ignored; for example, 5.67 is treated as 5.6. If *ratio* is greater than 25, any digits after the decimal point are ignored; for example, 25.98 is treated as 25. A group buffer pool is defined with a default ratio of 10. (Group buffer pools that were defined before APAR PH13045 was applied in Db2 12 were defined with a default ratio of 5.)

The actual number of directory entries and data pages that are allocated depends on the size of the coupling facility structure, which is specified in the coupling facility policy definitions (CFRM policy).

CLASST (*class-threshold1*,*class-threshold2*)
Changes the threshold at which data in the class castout queue is cast out to disk.

class-threshold1 is a percentage of the number of data entries and can be an integer in the range 0–90, inclusive. The default *class-threshold1* value when a group buffer pool is defined is 5.

For example, CLASST(10,0) starts class castout when the number of pages in that class equals 10% of the group buffer pool page capacity.

class-threshold2 is an absolute number of pages. You can use *class-threshold2* when you need a relatively low threshold value for a large group buffer pool but *class-threshold1* does not provide the necessary granularity between the *class-threshold1* values of 0 and 1. *class-threshold2* can be an integer in the range 0–32767, inclusive. The default *class-threshold2* value when a group buffer pool is defined is 0.

For example, CLASST(0,2500) starts class castout when the number of pages in that class reaches 2500.

The value of *class-threshold2* is used only when *class-threshold1* is 0. If the value of *class-threshold1* is non-zero, the value of *class-threshold2* is ignored. If both *class-threshold1* and *class-threshold2* are 0, the *class-threshold1* value of 0 is used.

GBPOOLT (*integer*)
Changes the threshold at which data in the group buffer pool is cast out to disk.

integer is expressed as a percentage of the number of data entries and can range 0–90. The default value is when group buffer pool is defined is 30.

For example, GBPOOLT(55) casts out data if the number of pages in the group buffer pool equals 55% of the group buffer pool page capacity.

GBPCHKPT (*integer*)
Changes the time interval, in minutes, between successive checkpoints of the group buffer pool. *integer* can range from 1 to 999999. The default value when a group buffer pool is defined is 4 minutes.

The more frequently checkpoints are taken, the less time it takes to recover the group buffer pool if the coupling facility fails.

Usage notes

Default values of unaltered group buffer pools

When you issue an ALTER GROUPBUFFERPOOL command, it does not change any option that you did not explicitly specify. That is, the default is to leave the values unchanged.

An unaltered group buffer pool has the values shown in the following table for the attributes that you can change with the ALTER GROUPBUFFERPOOL command.

Option	Value
GBPCACHE	YES
RATIO	10
CLASST	5,0
GBPOOLT	30 (%)
GBPCHKPT	4 (minutes)

When new values take effect

When you issue the ALTER GROUPBUFFERPOOL command, some option specifications become effective only at the next allocation of the group buffer pool. The following table lists each option, when the new value takes effect, and if the option is applicable for a group buffer pool that is specified as GBPCACHE(NO).

Keyword	New value takes effect	Applicable if GBPCACHE(NO)?
GBPCACHE	at next allocation	N/A

Keyword	New value takes effect	Applicable if GBPCACHE(NO)?
AUTOREC	immediately	No
RATIO	at next allocation “2” on page 40	No “3” on page 40
CLASST	immediately	No “3” on page 40
GBPOOLT	immediately	No “3” on page 40
GBPCHKPT	immediately	No “3” on page 40

Notes:

1. You can use the z/OS command SETXCF START,REBUILD to have the change take effect if the group buffer pool is not duplexed. If the group buffer pool is duplexed and you want to change to GBPCACHE(NO), first go back to simplex mode and rebuild. GBPCACHE(NO) is not allowed for duplexed group buffer pools.
2. You can use the z/OS command SETXCF START,REBUILD to have the change take effect if the group buffer pool is not duplexed. If the group buffer pool is duplexed, first go back to simplex mode and rebuild; then optionally go back to duplex mode. If a group buffer pool is duplexed, both instances of that duplexed group buffer pool use the same RATIO value.
3. Db2 issues message DSNB761 when you specify this option for a GBPCACHE(NO) group buffer pool. These settings only take effect after the GBPCACHE attribute has been changed to YES.

Trace information for data sharing members

When this command with group scope is issued in a Db2 data sharing member, it also runs on all other active members. IFICID 090 trace records for other group members can show that the same command was issued by the SYSOPR authorization ID from the 016.TLPKN5F correlation ID, in addition to the trace records from the member where the original command was issued. See Command scope in Db2 data sharing (Db2 Data Sharing Planning and Administration).

Examples

Example: Changing the ratio of directory entries to data pages

For group buffer pool 0, the following command changes the ratio of directory entries to data pages to one directory entry for every data page. The RATIO specification becomes effective at the next allocation of the group buffer pool.

```
-DB1G ALTER GROUPBUFFERPOOL (GBP0) RATIO(1)
```

Example: Changing the class castout threshold

For group buffer pool 3, change the class castout threshold to 10 %. The new value takes effect immediately. Because the group name is DSNCAT, the coupling facility structure name is DSNCAT_GBP3. Also, when a structure fails, the AUTOREC(YES) option enables Db2 to automatically recover the page sets and partitions that are in a GRECP status or that have pages on the logical page list.

```
-DB1G ALTER GROUPBUFFERPOOL (DSNCAT_GBP3) CLASST(10,0) AUTOREC(YES)
```

Example: Changing the class castout threshold and the group buffer pool castout threshold

For group buffer pool 2, the following command changes the class castout threshold to 10% and the group buffer pool castout threshold to 50%. The new values take effect immediately.

```
-DB1G ALTER GROUPBUFFERPOOL (GBP2) CLASST(10,0) GBPOOLT(50)
```

Example: Changing the group buffer pool checkpoint frequency

For group buffer pool 32K, the following command changes the GBP checkpoint frequency to five minutes. The new value takes effect immediately. In this example, with AUTOREC(NO) specified, Db2 does not start automatic recovery when a structure fails. You might choose this option if you want to

determine what page sets or partitions are in a GRECP status or have pages on the logical page list before you enter the START DATABASE command to recover the data with the options you specify.

```
-DB1G ALTER GROUPBUFFERPOOL (GBP32K) GBPCHKPT(5) AUTOREC(NO)
```

Chapter 8. -ALTER UTILITY command (Db2)

The Db2 command ALTER UTILITY changes the values of certain parameters of an execution of the REORG utility that uses SHRLEVEL REFERENCE or CHANGE and the REBUILD utility that uses SHRLEVEL CHANGE.

Specifically, this command changes the values of DEADLINE, MAXRO, LONGLOG, and DELAY.

REBUILD and REORG can be altered only from the Db2 subsystem on which ALTER UTILITY is running.

ALTER UTILITY applies to a single utility control statement. It has no effect on other utility control statements that are later in the same job step. If a LISTDEF control statement is being processed, ALTER UTILITY applies only to the subset of list items that are currently being processed.

Abbreviation: -ALT UTIL

Environment

This command can be issued from a z/OS console, a DSN session, a DB2I panel (DB2 COMMANDS), an IMS or a CICS terminal, or a program using the instrumentation facility interface (IFI).

`Data sharing scope` : Member

Authorization

To execute this command, you must use the primary or some secondary authorization ID of the process that originally submitted the utility job. Alternatively, you must use a privilege set of the process that includes one of the following authorities:

- DATAACCESS authority
- DBCTRL authority
- DBADM authority
- System DBADM authority
- DATAACCESS authority
- SYSOPR authority
- SYSCTRL authority
- SYSADM authority

Db2 commands that are issued from a logged-on z/OS console or TSO SDSF can be checked by Db2 authorization using primary and secondary authorization IDs. A logged-on z/OS user ID must be defined in RACF or a similar security server.

For users with DBMAINT, DBCTRL, or DBADM authority, the command takes effect only when a user has sufficient authority over each object that the utility job accesses.

© Copyright IBM Corp. 1983, 2024

Syntax

```
►► ALTER UTILITY ── (utility-id ) ──┬─ REBUILD ─┬──┬──────────────────────────────────►
                                    └─ REORG ───┘  └─ DEADLINE( ──┬─ NONE ──────┬─ ) ─┘
                                                                  └─ timestamp ─┘

►──┬──────────────────────────────────────────────────────────────────────────────►
   └─ MAXRO( ──┬─ integer ─┬─ ) ─┘  └─ LONGLOG( ──┬─ CONTINUE ─┬─ ) ─┘
               └─ DEFER ───┘                      ├─ TERM ─────┤
                                                  └─ DRAIN ────┘

►──┬──────────────────────────►◄
   └─ DELAY( integer) ─┘
```

Option descriptions

(*utility-id*)

Is the utility identifier, or the UID parameter, used when creating the utility job step.

This job must execute REBUILD SHRLEVEL CHANGE, REORG with SHRLEVEL CHANGE, or SHRLEVEL REFERENCE.

If *utility-id* was created by the DSNU CLIST by default, it has the form *tso-userid.control-file-name*.

If *utility-id* was created by default by the EXEC statement that executed DSNUTILB, it has the form *userid.jobname*.

If *utility-id* contains lowercase letters or special characters, it must be enclosed in single quotation marks (').

REBUILD

Specifies that a REBUILD SHRLEVEL CHANGE utility is being altered.

REORG

Specifies that a REORG SHRLEVEL REFERENCE or REORG SHRLEVEL CHANGE utility is being altered.

DEADLINE

Specifies the deadline by which the user wants the switch phase of reorganization to start.

Only valid when altering a REORG SHRLEVEL REFERENCE or REORG SHRLEVEL CHANGE utility.

If Db2 estimates that the switch phase will not start by the deadline, Db2 terminates reorganization. The default is the value of DEADLINE that is currently in effect.

The pre-switch processing might continue until after the deadline.

(NONE)

Specifies that there is no deadline for the read-only iteration of log processing.

(*timestamp*)

Specifies the deadline by which the user wants the switch phase to start processing. This deadline must not have been reached when ALTER UTILITY executes.

MAXRO

Specifies the maximum amount of time that is tolerated for the last iteration of log processing during reorganization. During that iteration, applications have read-only access.

The actual execution time of the last iteration can exceed the value specified for MAXRO.

The default is the value of MAXRO that is currently in effect.

(*integer*)
Specifies the number of seconds.

(DEFER)
Specifies that the log phase is deferred indefinitely.

LONGLOG
Specifies the action that Db2 performs (after sending the LONGLOG message to the console) if the number of log records that are processed during the next iteration is not sufficiently lower than the number of log records that were processed during the previous iterations. The default is the value of LONGLOG that is currently in effect.

(CONTINUE)
Specifies that Db2 continues the log phase.

(TERM)
Specifies that Db2 terminates the utility after the delay.

(DRAIN)
Specifies that Db2 drain the write claim class after the delay (if specified). The number of log records, and thus the *estimated* time, for a future iteration of log processing will be 0.

DELAY (*integer*)
Specifies a lower bound for the interval between the time when the utility sends the LONGLOG message to the console and the time when the utility performs the action specified by the LONGLOG parameter.

integer is the delay in seconds. The value must be nonnegative. The default is the value of DELAY that is currently in effect.

Examples

Example: Alter several options for an execution of the REORG utility

The following commands alters the execution of the REORG utility for the utility job step whose utility identifier is REORGEMP:

```
-ALTER UTILITY (REORGEMP) REORG MAXRO(240) LONGLOG(DRAIN)
```

The following list explains what each option does in the preceding example:

- MAXRO(240) changes the maximum tolerable time for the last iteration of log processing to 240 seconds (4 minutes).
- LONGLOG(DRAIN) specifies that Db2 drain the write claim class (if reading of the log during REORG is not catching up to the speed at which the application is writing the log).
- DELAY is not specified so this example does not change the existing delay between sending the LONGLOG message to the console and performing the action specified by LONGLOG.
- DEADLINE is not specified so this example does not change the deadline (if any) that was defined in the last iteration of log processing.

Chapter 9. -ARCHIVE LOG command (Db2)

The Db2 command ARCHIVE LOG enables a site to close a current active log and open the next available log data set.

When issued without any options, the Db2 command ARCHIVE LOG performs the following functions:

- Truncates the current active log data sets
- Starts an asynchronous task to offload the data sets
- Archives previous active log data sets not yet archived
- Returns control to the user (immediately)

In a data sharing environment, you can truncate and archive the logs for an individual member or for all members in the group.

When specified with the option MODE(QUIESCE), the ARCHIVE LOG command attempts to quiesce (suspend) all Db2 user update activity on the Db2 active log prior to the offload process. When a system-wide point of consistency is reached (that is, when all currently active update users have reached a commit point), the active log is immediately truncated, and the offload process is initiated. The resulting point of consistency is captured in the current active log before it is offloaded. In a data sharing environment, you can create a system-wide point of consistency only for the entire group.

Abbreviation: -ARC LOG

Environment

This command can be issued from a z/OS console, a DSN session under TSO, a DB2I panel (DB2 COMMANDS), an IMS or CICS terminal, or a program using the instrumentation facility interface (IFI).

The ARCHIVE LOG command can also be issued from the z/OS subsystem interface (SSI) to enable automated scheduling systems and other programs to execute the command via supervisor call instruction (SVC) 34.

Data sharing scope: Group or member

Authorization

To execute this command, you must use a privilege set of the process that includes one of the following privileges or authorities:

- ARCHIVE privilege
- Installation SYSOPR authority
- SYSCTRL authority
- SYSADM authority

Db2 commands that are issued from a logged-on z/OS console or TSO SDSF can be checked by Db2 authorization using primary and secondary authorization IDs. A logged-on z/OS user ID must be defined in RACF or a similar security server.

© Copyright IBM Corp. 1983, 2024

Syntax

```
►► ARCHIVE LOG ►
   ►┬──────────────────────────────────────────────────────────────────────────────┬►◄
    ├─ MODE(QUIESCE) ─┬──────────────┬─┬──────────────────────────────────────────┤
    │                 └─ TIME( nnn ) ─┘ │                                          │
    │                                   └─ WAIT( ┬──────────┬──────────┬─ ) ─┘
    │                                            │          │ NO       │
    │                                            │          └──────────┘
    │                                            └─ YES ────┘
    │                                   ┌─ MEMBER ─┐
    ├──────────────────────── SCOPE( ──┤          ├─ ) ──────────────────────────┤
    │                                   └─ GROUP ──┘
    └──────────────────────── CANCEL OFFLOAD ──────────────────────────────────┘
```

Option descriptions

MODE(QUIESCE)

Halts all new update activity by the Db2 subsystem for a specified period of time and attempts to bring all existing users to a point of consistency after a commit or rollback. When a point of consistency is reached and captured in the current active log data set, the current active log data set is truncated, and another log data set in the inventory becomes current. Offload processing then begins with the oldest active log data set and ends with the active log data set that was truncated.

In a data sharing environment, before archiving logs of any member, this option quiesces all active members of a data sharing group. MODE(QUIESCE) also ensures that each inactive member had successfully quiesced its update activity and resolved any indoubt units of recovery (URs) before the inactive subsystem completed normal termination. If any Db2 subsystem is in a failed state, fails during quiesce processing, or is stopped with outstanding URs, the ARCHIVE LOG command fails, and the remaining active members allow update activity to proceed.

If no indoubt URs exist on all quiesced members, active or inactive, the archive operation can continue for active members in the group. Thus, you can archive logs of a data sharing group normally without forcing all members to be active. The current logs of inactive members are truncated and offloaded after they start.

If a system-wide point of consistency cannot be reached during the quiesce period, which is a length of time you can specify, execution of the ARCHIVE LOG command fails and an error message is issued. In a data sharing environment, the maximum time period applies for the whole group, and if any Db2 subsystem cannot quiesce within the time allowed, the command fails.

If there is no update activity on Db2 data when the command ARCHIVE LOG MODE(QUIESCE) is issued, the active log is truncated and offloaded immediately.

TIME(*nnn*)

Specifies the maximum length of time, in seconds, in which the Db2 subsystem is allowed to attempt a full system quiesce.

If you do not specify a time, the **default** is the length of time specified in the field QUIESCE PERIOD of installation panel DSNTIPA.

nnn can range from 001 to 999 seconds. You must allocate an appropriate time period for the quiesce processing or the following events can occur:

- The quiesce processing can expire before a full quiesce is accomplished.
- An unnecessary Db2 lock contention can be imposed.
- A timeout can occur.

This option is valid only when used in conjunction with the option MODE(QUIESCE).

WAIT

Specifies whether the Db2 subsystem should wait until the quiesce processing has completed before returning control to the invoking console or program, or should return control when the quiesce processing begins.

This option is valid only when used in conjunction with the option MODE(QUIESCE).

(NO)

Specifies that control must be returned to the invoking program when the quiesce processing begins.

If WAIT(NO) is used, quiesce processing is asynchronous to the user; that is, you can issue additional Db2 commands after the ARCHIVE LOG command returns control to you.

(YES)

Specifies that the quiesce processing must complete before returning control to the invoking console or program.

If WAIT(YES) is used, quiesce processing is synchronous to the user; that is, additional Db2 commands can be issued, but they are not processed by the Db2 command processor until the ARCHIVE LOG command is complete.

SCOPE

Specifies whether the command applies to the entire data sharing group or to a single member only. The SCOPE option is valid only in a data sharing environment; the option is ignored in a non-data-sharing environment. SCOPE cannot be specified if MODE(QUIESCE) is specified; the two keywords are mutually exclusive.

(MEMBER)

Initiates offload processing only for the member from which the command is issued. User update activity is not suspended. If that member, or the entire group, is already archiving, the command fails. This is the default, except when MODE(QUIESCE) is specified.

(GROUP)

Initiates offload processing for every member of the Db2 group. User update activity is not suspended. If any member of the group, or the entire group, is already archiving, the command fails.

CANCEL OFFLOAD

Cancels any off loading currently in progress and restarts the offload process, beginning with the oldest active log data set that has not been off loaded and proceeding through all active log data sets that need off loading. Any suspended offload operations are restarted.

Usage notes

Remote site recovery

The ARCHIVE LOG command is very useful when performing a Db2 backup in preparation for a remote site recovery. For example, the command allows the Db2 subsystem to quiesce all users after a commit point, and capture the resulting point of consistency in the current active log *before* the archive is taken. Therefore, when the archive log is used with the most current image copy (during an offsite recovery), the number of data inconsistencies will be minimized.

Simultaneous executions

The ARCHIVE LOG command cannot be executed if another ARCHIVE LOG command is in progress. Instead, error message DSNJ318I is issued and the command fails. This is true in both data sharing and non-data-sharing environments. For example, in a data sharing environment, the command fails if the data sharing member, or group to which it belongs, is already archiving.

Available active log space

ARCHIVE LOG cannot be used when the current active log is the last available active log data set because of the following reasons:

- All available active log space would be used.
- The Db2 subsystem would halt processing until an offload is complete.

Executing ARCHIVE LOG while STOP DB2 is in progress

ARCHIVE LOG without the option MODE(QUIESCE) is permitted when STOP DB2 MODE(QUIESCE) is in progress. However, if an attempt is made to execute the ARCHIVE LOG command when a STOP DB2 MODE(FORCE) is in progress, error message DSNJ315I is issued and the ARCHIVE LOG command is not processed.

ARCHIVE LOG with the option MODE(QUIESCE) is not allowed when a STOP DB2 MODE(FORCE) or STOP DB2 MODE(QUIESCE) is in progress. If an attempt is made to run the ARCHIVE LOG command under these circumstances, error message DSNJ315I or DSNJ316I is issued.

If the system was not fully quiesced (as determined by the number of users which could not be quiesced), error message DSNJ317I is issued and ARCHIVE LOG command processing is terminated. The current active log data set is not truncated and switched to the next available active log data set, and the archive log is not created.

Canceling log offloads

It is possible for the offload of an active log to be suspended when something goes wrong with the offload process, such as a problem with allocation or tape mounting. Issuing ARCHIVE LOG CANCEL OFFLOAD interrupts the offload process and restarts the offload. The command causes an abnormal termination of the offload task, which can result in a dump. Use ARCHIVE LOG CANCEL OFFLOAD only if the offload task is no longer functioning, or if you want to restart a previous offload attempt that failed.

Demand on Db2 resources

Using the option MODE(QUIESCE) during times of peak activity or during periods in which time is critical causes a significant disruption in the availability of Db2 for all users of Db2 resources.

Interaction with DISPLAY THREAD

The command DISPLAY THREAD issues message DSNV400I, indicating that an ARCHIVE LOG MODE(QUIESCE) command is active.

Quiescing members of a data sharing group

It is not possible to quiesce a single member of a data sharing group. When MODE(QUIESCE) is specified in a data sharing group, the entire group is quiesced.

Executing ARCHIVE LOG while logging is suspended

While logging is suspended by SET LOG SUSPEND, do not use ARCHIVE LOG unless CANCEL OFFLOAD is specified. If logging is suspended, issue SET LOG RESUME to resume logging before issuing ARCHIVE LOG.

Trace information for commands issued with group scope

If this command is issued with options that specify group scope in a Db2 data sharing member, it also runs on all other active members. IFICID 090 trace records for other group members can show that the same command was issued by the SYSOPR authorization ID from the 016.TLPKN5F correlation ID, in addition to the trace records from the member where the original command was issued. See Command scope in Db2 data sharing (Db2 Data Sharing Planning and Administration).

Examples

Example: Truncating the current active log data sets and switching to the next available active log

The following command truncates the current active log data sets and initiate an asynchronous job to offload the truncated data sets. No quiesce processing occurs.

```
-ARCHIVE LOG
```

Example: Initiating the default quiesce period before truncating the active log data sets and switching to the next available active log

The following command initiates a quiesce period. If all Db2 update activity is stopped within this period, truncate the current active log data set and switch to the next available active log data set. Let the value in the field QUIESCE PERIOD of installation panel DSNTIPA determine the length of the quiesce period. The MODE(QUIESCE) processing is asynchronous.

```
-ARCHIVE LOG MODE(QUIESCE)
```

If the Db2 subsystem can successfully block all update activity before the quiesce period ends, it proceeds to the next processing step. If the quiesce time period is insufficient to successfully quiesce the Db2 subsystem, the active log data sets are not truncated and the archive does not occur.

Example: Initiating a quiesce period of a specified length before truncating the active log data sets and switching to the next available active log

The following command initiates a quiesce period. If all Db2 update activity is stopped within this period, truncate the current active log data set and switch to the next available active log data set. The maximum length of the quiesce processing period is seven minutes (420 seconds) and the processing is synchronous for the entire seven minutes.

```
-ARCHIVE LOG MODE(QUIESCE) WAIT(YES) TIME(420)
```

If the Db2 subsystem can successfully block all update activity before the quiesce period ends, it proceeds to the next processing step. If the quiesce time period is insufficient to successfully quiesce the Db2 subsystem, the active log data sets are not truncated and the archive does not occur.

Example: Quiescing all members of a data sharing group before truncating the active log data sets and switching to the next available active log

The following command initiates a quiesce period for all members of the data sharing group. If all Db2 update activity is stopped within this period, truncate the current active log data set and switch to the next available active log data set. Specify a quiesce time period of 10 minutes (600 seconds) to override the value in the field QUIESCE PERIOD of installation panel DSNTIPA for member DB1G. If the update activity has not quiesced after the 10 minute quiesce period, the command fails and new update activity is allowed to proceed.

```
-DB1G ARCHIVE LOG MODE(QUIESCE) TIME(600)
```

Example: Truncating the active log data sets and initiating and offload for a single member of a data sharing group

In a data sharing environment the following command truncates the active log data sets for group member DB2G and initiate an asynchronous job to offload the truncated data sets, without any quiesce processing. In this example, SCOPE(MEMBER) is used by default.

```
-DB2G ARCHIVE LOG
```

Example: Truncating the active log data sets and initiating and offload for all members of a data sharing group

The following command truncates the data sets for all members of the data sharing group and initiate an asynchronous job to offload the truncated data sets, without any quiesce processing.

```
-DB2G ARCHIVE LOG SCOPE(GROUP)
```

Chapter 10. BIND PACKAGE subcommand (DSN)

The DSN subcommand BIND PACKAGE builds an application package. Db2 records the description of the package in the catalog tables and saves the prepared package in the directory. BIND PACKAGE also deletes phased-out package copies.

Environment for BIND PACKAGE

You can use BIND PACKAGE from DB2I, or from a DSN session under TSO that runs in either the foreground or background.

Data sharing scope: Group

Authorization for BIND PACKAGE

The package owner must have authorization to execute **all** statements embedded in the package for BIND PACKAGE to build a package without producing error messages. The SYSADM authority and the DATAACCESS authority includes this authorization.

For VALIDATE(BIND), Db2 verifies the authorization at bind time, with the exception of the LOCK TABLE statement, and some CREATE, ALTER, and DROP statements. For those SQL statements, Db2 verifies the authorization at run time.

For VALIDATE(RUN), Db2 verifies the authorization initially at bind time, but if the authorization check fails, Db2 rechecks it at run time.

The required authorization to add a new package or a new version of an existing package depends on the value of subsystem parameter BINDNV. The default value is BINDADD.

The package owner must be a role to execute BIND PACKAGE in a trusted context with role ownership. If performing a bind in a trusted context that has a role-as-object owner, then the owner of the package will be a role. If OWNER is specified, then it is assumed to be a role. If it is not specified, then the role of the binder becomes the owner.

To specify the option SQLERROR(CHECK), the binder must have the BIND, BINDAGENT, or EXPLAIN privilege.

To specify the option EXPLAIN(ONLY), the binder must have the EXPLAIN privilege.

The following table summarizes the required authorization to run BIND PACKAGE, depending on the bind options that you specify, and in the case of the ADD option, the value of installation panel field BIND NEW PACKAGE.

© Copyright IBM Corp. 1983, 2024

Table 3. Summary of privileges needed for BIND PACKAGE options

Bind option	Installation panel field BIND NEW PACKAGE (BINDNV subsystem parameter)	Authorization required to run BIND PACKAGE
ADD, using the default owner or primary authorization ID	BINDADD	The primary authorization ID or role must have one of the following to add a new package or new version of an existing package to a collection: • The BINDADD system privilege and either the CREATE IN privilege or PACKADM authority on the collection or on all collections • SYSADM, SYSCTRL, or system DBADM authority
ADD, using the default owner or primary authorization ID	BIND	The primary authorization ID or role must have one of the following to add a new package or a new version of an existing package to a collection: • The BINDADD system privilege and either the CREATE IN privilege or PACKADM authority on the collection or on all collections • SYSADM, SYSCTRL, or system DBADM authority • PACKADM authority on the collection or on all collections • The BIND package privilege (can only add a new version of an existing package)

Table 3. Summary of privileges needed for BIND PACKAGE options (continued)

Bind option	Installation panel field BIND NEW PACKAGE (BINDNV subsystem parameter)	Authorization required to run BIND PACKAGE
ADD, specifying an OWNER other than the primary authorization ID"1" on page 59	BINDADD	If any of the authorization IDs or roles of the process has SYSADM authority, SYSCTRL authority, or system DBADM authority, OWNER *authorization-id* can be any value, when subsystem parameter SEPARATE_SECURITY is set to NO. If any of the authorization IDs has the BINDAGENT privilege granted from the owner, *authorization-id* can specify the grantor as OWNER. Otherwise, the OWNER *authorization-id* must be one of the primary or secondary authorization IDs of the binder. If you specify OWNER *authorization-id* , Db2 first checks the OWNER and then the binder for the necessary bind privilege. If the binder does not have SYSADM, SYSCTRL, or system DBADM authority, the authorization ID or role of the OWNER must have one of the following to add a new package or new version of an existing package to a collection: • The BINDADD system privilege and either the CREATE IN privilege or PACKADM authority on the collection or on all collections • SYSADM, SYSCTRL, or system DBADM authority

Table 3. Summary of privileges needed for BIND PACKAGE options (continued)

Bind option	Installation panel field BIND NEW PACKAGE (BINDNV subsystem parameter)	Authorization required to run BIND PACKAGE
ADD, specifying an OWNER other than the primary authorization ID"1" on page 59	BIND	If any of the authorization IDs or roles of the process has SYSADM authority, SYSCTRL authority, or system DBADM authority, OWNER *authorization-id* can be any value, when subsystem parameter SEPARATE_SECURITY is set to NO. If any of the authorization IDs has the BINDAGENT privilege granted from the owner, *authorization-id* can specify the grantor as OWNER. Otherwise, the OWNER *authorization-id* must be one of the primary or secondary authorization IDs of the binder. If you specify OWNER *authorization-id* , Db2 first checks the OWNER and then the binder for the necessary bind privilege. If the binder does not have SYSADM, SYSCTRL, or system DBADM authority, the authorization ID or role of the OWNER must have one of the following to add a new package or new version of an existing package to a collection: • The BINDADD system privilege and either the CREATE IN privilege or PACKADM authority on the collection or on all collections • SYSADM, SYSCTRL, or system DBADM authority • PACKADM authority on the collection or on all collections • The BIND package privilege (can only add a new version of an existing package)

Table 3. Summary of privileges needed for BIND PACKAGE options (continued)

Bind option	Installation panel field BIND NEW PACKAGE (BINDNV subsystem parameter)	Authorization required to run BIND PACKAGE
REPLACE, using the default owner or primary authorization ID	BINDADD or BIND	Primary authorization ID or role must have one of the following: • Ownership of the package • BIND privilege on the package. If the package does not exist, see the authorization that is required for "ADD, using the default owner or primary authorization ID." • PACKADM authority on the collection or on all collections • SYSADM, SYSCTRL, or system DBADM authority

Table 3. Summary of privileges needed for BIND PACKAGE options (continued)

Bind option	Installation panel field BIND NEW PACKAGE (BINDNV subsystem parameter)	Authorization required to run BIND PACKAGE
REPLACE, specifying an OWNER other than the primary authorization ID"1" on page 59	BINDADD or BIND	If any of the authorization IDs or roles of the process has SYSADM authority, SYSCTRL authority, or system DBADM authority, OWNER *authorization-id* can be any value, when subsystem parameter SEPARATE_SECURITY is set to NO. If any of the authorization IDs has the BINDAGENT privilege granted from the owner, *authorization-id* can specify the grantor as OWNER. Otherwise, the OWNER *authorization-id* must be one of the primary or secondary authorization IDs of the binder. If you specify OWNER *authorization-id* , Db2 first checks the OWNER and then the binder for the necessary bind privilege. If the binder does not have SYSADM or SYSCTRL or system DBADM authority, the authorization ID or role of the OWNER must have one of the following: • BIND privilege on the package. If the package does not exist, the authorization that is required is the same as for ADD, when an OWNER other than the primary authorization ID is specified. • BINDAGENT privilege from the current owner of the package. • PACKADM authority on the collection or on all collections • SYSADM, SYSCTRL, or system DBADM authority

Table 3. Summary of privileges needed for BIND PACKAGE options (continued)

Bind option	Installation panel field BIND NEW PACKAGE (BINDNV subsystem parameter)	Authorization required to run BIND PACKAGE
COPY	BINDADD or BIND	The primary or secondary authorization ID or role of the binder or OWNER must have one of the following on the package being copied: • Ownership of the package • COPY privilege on the package • BINDAGENT privilege from the owner of the package • PACKADM authority on the collection or on all collections • SYSADM, SYSCTRL, or system DBADM authority

Note:

1. If both the OWNER and the binder do not have the necessary bind privilege and the IFCID 140 trace is active, a trace record is written with details about the authorization failure.

Syntax

```
BIND PACKAGE ( [location-name.] collection-id )
  [OWNER ( authorization-id )] [QUALIFIER( qualifier-name )]
  [enable-block] member-block [DEFER(PREPARE)|DEFER(INHERITFROMPLAN)|NODEFER(PREPARE)]
  [ACTION (REPLACE) [REPLVER( version-id )] | (ADD)]
  [CONCENTRATESTMT( NO|YES )]
  [CURRENTDATA( NO|YES )]
  [DBPROTOCOL( DRDA|DRDACBF )] [DEGREE( 1|ANY )]
  [DESCSTAT( NO|YES )] acceleration-block dynamicrules-block
  encoding-block [EXPLAIN( NO|YES|ONLY )]
  [FLAG( I|W|E|C )]
  [IMMEDWRITE( INHERITFROMPLAN|NO|YES )]
  [ISOLATION( 1|CS|RR|RS|UR|NC )] [KEEPDYNAMIC( NO|YES )]
  reopt-block [OPTHINT( 'hint-id' )]
  [PATH( schema-name,... | USER )]
  [ROUNDING( CEILING|DOWN|FLOOR|HALFDOWN|HALFEVEN|HALFUP|UP )]
  [RELEASE( COMMIT|DEALLOCATE|INHERITFROMPLAN )]
  [SQLERROR( NOPACKAGE|CONTINUE|CHECK )] [VALIDATE( RUN|BIND )]
  [EXTENDEDINDICATOR( NO|YES )]
  [CONCURRENTACCESSRESOLUTION( USECURRENTLYCOMMITTED|WAITFOROUTCOME )]
  [APREUSE( NONE|ERROR|WARN )] [APCOMPARE( NONE|WARN|ERROR )]
  [GENERIC( 'string' )] [BUSTIMESENSITIVE( YES|NO )]
  [SYSTIMESENSITIVE( YES|NO )]
  [ARCHIVESENSITIVE( YES|NO )]
  [APPLCOMPAT( function-level|V11R1|V10R1 )]
```

Notes:

[1] The default for a local package is the plan value. The default for a remote package is CS.

member-block

```
MEMBER( dbrm-member-name )  [ LIBRARY( dbrm-library-name ) ]
COPY( collection-id.package-id )  [ COPYVER( version-id ) ]  [ copy-options ]
DEPLOY( collection-id.package-id ) COPYVER( version-id )
```

enable-block

```
ENABLE(*)
ENABLE | DISABLE ( BATCH | DLIBATCH | DB2CALL | CICS | IMS | IMSBMP | IMSMPP | REMOTE | RRSAF )
DLIBATCH( connection-name )
CICS( applid )
IMSBMP( imsid )
IMSMPP( imsid )
```

acceleration-block

```
QUERYACCELERATION( NONE | ENABLE | ENABLEWITHFAILBACK | ELIGIBLE | ALL )
GETACCELARCHIVE( NO | YES )
ACCELERATIONWAITFORDATA( 'nnnn.m' )  ACCELERATOR( 'accelerator-name' )
```

dynamicrules-block

```
DYNAMICRULES( RUN | BIND | DEFINEBIND | DEFINERUN | INVOKEBIND | INVOKERUN )
```

encoding-block

```
►►──┬──────────────────────────────────────────────┬──►◄
    └─ENCODING(──┬─ASCII───┬──)──┘
                 ├─EBCDIC──┤
                 ├─UNICODE─┤
                 └─ccsid───┘
```

reopt-block

```
►►──┬──────────────────────────────────────────────┬──►◄
    └─REOPT(──┬─NONE 1──┬──)──┘
              ├─ALWAYS 2┤
              ├─ONCE────┤
              └─AUTO────┘
```

Notes:

[1] NOREOPT(VARS) can be specified as a synonym of REOPT(NONE)
[2] REOPT(VARS) can be specified as a synonym of REOPT(ALWAYS)

Descriptions for BIND PACKAGE

The following options identify the package to bind. You can identify the location and collection ID. The DBRM supplies the package ID and version ID if you use the MEMBER option. See "MEMBER bind option" on page 131. Otherwise, these IDs come from the COPY option. See "COPY bind option" on page 97

location-name

The location of the DBMS where the package binds and where the description of the package resides. The location name must be defined in catalog table SYSIBM.LOCATIONS. If that table does not exist or if the DBMS is not in it, you receive an error message. See LOCATIONS catalog table (Db2 SQL).

The default is the local DBMS.

collection-id

Specifies the collection to contain the package to bind. There is no default value.

collection-id can be an undelimited or delimited identifier. The delimiter for *collection-id* is double quotation marks ("). If *collection-id* is delimited, Db2 does not convert the value to uppercase.

Other options for BIND PACKAGE

For descriptions of the other options in the syntax diagram, see Chapter 14, "BIND and REBIND options for packages, plans, and services ," on page 81.

Usage notes for BIND PACKAGE

Trace information for data sharing members

When this command with group scope is issued in a Db2 data sharing member, it also runs on all other active members. IFICID 090 trace records for other group members can show that the same command was issued by the SYSOPR authorization ID from the 016.TLPKN5F correlation ID, in addition to the trace records from the member where the original command was issued. See Command scope in Db2 data sharing (Db2 Data Sharing Planning and Administration).

Examples for BIND PACKAGE

Example: Replacing a version of a package

The following command replaces version APRIL_VERSION of package TEST.DSN8BC12 at local location USIBMSTODB22 with another version of the package. The new version (or it could be the

same) is in the DBRM DSN8BC12. If the DBRM contains no version ID, the version ID of the package defaults to the empty string. The package runs only from the TSO BATCH environment, and from the CICS environment if the connection ID is CON1. The name PRODUCTN qualifies all unqualified table, view, alias and index names.

```
BIND PACKAGE (USIBMSTODB22.TEST) -
  MEMBER (DSN8BC12) -
  ACTION (REPLACE) REPLVER (APRIL_VERSION) -
  QUALIFIER (PRODUCTN) -
  ENABLE (BATCH, CICS) CICS (CON1)
```

Example: Binding the SPUFI package with ISOLATION(UR)

UR isolation acquires almost no locks. It is fast and causes little contention, but it reads uncommitted data. Do not use ISOLATION(UR) unless you are sure that your applications and end users can accept the logically inconsistent data that can occur, such as in the case of this example.

Assume that a supervisor routinely executes SQL statements using SPUFI to check the status of parts as they go through the assembly process and to update a table with the results of her inspection. She does not need to know the exact status of the parts; a small margin of error is acceptable.

The supervisor queries the status of the parts from a production table called ASSEMBLY-STATUS and makes the updates in a non-production table called REPORTS. She uses the SPUFI option AUTOCOMMIT NO and has the habit of leaving data on the screen while she performs other tasks.

If the supervisor executes a version of SPUFI that is bound with ISOLATION(UR), the query for the status of the parts executes without acquiring locks using UR isolation level and the update executes using CS isolation level. Thus, the query does not inadvertently hold locks in the production table, which interferes with the production jobs, and the supervisor has data good enough for her purposes.

The SPUFI application is bound as follows:

```
BIND PACKAGE(DSNESPUR) -
  COPY(DSNESPCS.DSNESM68) -
  ACTION(ADD) -
  ISOLATION(UR)
```

Example: Binding a package for a native SQL procedure

The following command creates a native SQL procedure named CHICAGO.PRODUCTION.MYPROC from the current location procedure TEST.MYPROC.

Deprecated function: The DEPLOY bind option is deprecated. For best results, deploy compiled SQL functions and native SQL procedures to multiple environments by issuing the same CREATE or ALTER statements separately in each Db2 environment.

Both native SQL procedures have the same version ABC. The package for native SQL procedure CHICAGO.PRODUCTION.MYPROC.(ABC) has XYZ as QUALIFIER.

```
CREATE PROCEDURE TEST.MYPROC LANGUAGE SQL VERSION ABC ...

BEGIN
...
END

BIND PACKAGE(CHICAGO.PRODUCTION) DEPLOY(TEST.MYPROC) COPYVER(ABC)
                  ACTION(ADD) QUALIFIER(XYZ)
```

The following command then replaces the native SQL procedure CHICAGO.PRODUCTION.MYPROC version ABC, using the current location native SQL procedure TEST.MYPROC version ABC.

```
BIND PACKAGE(CHICAGO.PRODUCTION) DEPLOY(TEST.MYPROC) COPYVER(ABC)
                  ACTION(REPLACE) REPLVER(ABC)
```

Related tasks

Binding application packages and plans (Db2 Application programming and SQL)

Related reference

BIND and REBIND options for packages, plans, and services

There are several options you can use for binding or rebinding packages, plans, and services. Some of the options are common for both BIND and REBIND operations.

REBIND PACKAGE subcommand (DSN)
The DSN subcommand REBIND PACKAGE rebinds an application package when you make changes that affect the package, but have not changed the SQL statements in the program.

BIND PLAN subcommand (DSN)
The DSN subcommand BIND PLAN builds an application plan. All Db2 programs require an application plan to allocate Db2 resources and support SQL requests made at run time.

BIND NEW PACKAGE field (BINDNV subsystem parameter) (Db2 Installation and Migration)

Chapter 11. BIND PLAN subcommand (DSN)

The DSN subcommand BIND PLAN builds an application plan. All Db2 programs require an application plan to allocate Db2 resources and support SQL requests made at run time.

Environment

You can use BIND PLAN through DB2I, or from a DSN session under TSO that runs in either the foreground or background.

Data sharing scope: Group

Authorization

The plan owner must be a role to execute BIND PLAN in a trusted context with role ownership.

The following table explains the authorization required to run BIND PLAN, depending on the options specified.

Table 4. Summary of privileges needed for BIND PLAN options

Option	Authorization required to run BIND PLAN
ADD, using the default owner or primary authorization ID	Primary authorization ID must have one of the following privileges: • BINDADD privilege • SYSADM, SYSCTRL, or system DBADM authority
ADD, specifying an OWNER other than the primary authorization ID	If the binder does not have SYSADM or SYSCTRL or system DBADM authority, the authorization ID of the new OWNER must have one of the following privileges: • BINDADD privilege • SYSADM, SYSCTRL, or system DBADM authority
REPLACE, using the default owner or primary authorization ID	Primary authorization ID of the process must have one of the following privileges: • Ownership of the plan • BIND privilege on the plan. If the plan does not exist, the authorization is the same as for ADD, using the default owner or primary authorization ID. • SYSADM, SYSCTRL, or system DBADM authority
REPLACE, specifying an OWNER other than the primary authorization ID	If the binder does not have SYSADM or SYSCTRL or system DBADM authority, the authorization ID of the OWNER must have one of the following privileges: • Ownership of the plan • BIND privilege on the plan. If the plan does not exist, the authorization is the same as for ADD, specifying an OWNER other than the primary authorization ID. • BINDAGENT privilege from the current owner of the plan. • SYSADM, SYSCTRL, or system DBADM authority
PKLIST, specifying individual packages	Authorization ID of the process must include one of the following privileges: • EXECUTE authority on each package specified in the PKLIST • PACKADM authority on specific collections that contain the packages or on all collections • SYSADM or DATAACCESS authority

© Copyright IBM Corp. 1983, 2024

Table 4. Summary of privileges needed for BIND PLAN options (continued)

Option	Authorization required to run BIND PLAN
PKLIST, specifying (*), indicating all packages in the collection	Authorization ID of the process must include one of the following privileges: • EXECUTE authority on *collection-id* .* • PACKADM authority on specific collections that contain the packages or on all collections • SYSADM or DATAACCESS authority

Specifying the OWNER for ADD and REPLACE: If any of the authorization IDs of the process has SYSADM authority, SYSCTRL authority, or system DBADM authority, OWNER *authorization-id* can be any value. If any of the authorization IDs has the BINDAGENT privilege granted from the owner, *authorization-id* can specify the grantor as OWNER. Otherwise, OWNER *authorization-id* must be one of the primary or secondary authorization IDs of the binder.

If you specify OWNER *authorization-id* , Db2 first checks the OWNER and then the binder for the necessary bind privilege. If both the OWNER and the binder do not have the necessary bind privilege and the IFCID 140 trace is active, the trace record is written.

Syntax

```
>>- BIND -- PLAN[1] (plan-name ) --+-------------------------------+-->
                                   +- OWNER( authorization-id ) -+
>+-------------------------+-- enable-block -- pklist-block --->
 +- QUALIFIER( qualifier-name ) -+
>+-- NODEFER(PREPARE) --+-------------------------------------------->
 +-- DEFER(PREPARE) ----+
>+-------------------------+-------------------------------------->
 +- ACQUIRE( --+-- USE --+-- ) -+
               +-- ALLOCATE -+
>+-------------------------------------------------------------->
 +- ACTION --+-- (REPLACE) --+-- RETAIN -+-+
             +-- (ADD) -------------------+-+
>+-------------------------+-------------------------------------->
 +- CACHESIZE( decimal-value ) -+
>+-------------------------+-------------------------------------->
 +- CURRENTDATA( --+-- NO --+-- ) -+
                   +-- YES -+
>+-------------------------+-------------------------------------->
 +- CURRENTSERVER( location-name ) -+
>+-------------------------+-------------------------------------->
 +- DBPROTOCOL( -- DRDA -- ) -+
>+-------------------------+-------------------------------------->
 +- DEGREE( --+-- 1 --+-- ) -+
              +-- ANY -+
>+-------------------------+-------------------------------------->
 +- DISCONNECT( --+-- EXPLICIT --+-- ) -+
                  +-- AUTOMATIC --+
                  +-- CONDITIONAL -+
>+-------------------------+-------------------------------------->
 +- DYNAMICRULES( --+-- RUN --+-- ) -+
                    +-- BIND -+
>+-------------------------+-------------------------------------->
 +- ENCODING( --+-- ASCII --+-- ) -+
                +-- EBCDIC -+
                +-- UNICODE -+
                +-- ccsid ---+
>+-------------------------+-------------------------------------->
 +- EXPLAIN( --+-- NO --+-- ) -+
               +-- YES -+
>+-------------------------+-------------------------------------->
 +- FLAG( --+-- I --+-- ) -+
            +-- W -+
            +-- E -+
            +-- C -+
>+-------------------------+-------------------------------------->
 +- IMMEDWRITE( --+-- NO --+-- ) -+
                  +-- YES -+
>+-------------------------+-------------------------------------->
 +- ISOLATION( --+-- CS --+-- ) -+
                 +-- RR -+
                 +-- RS -+
                 +-- UR -+
>+-------------------------+-------------------------------------->
 +- KEEPDYNAMIC( --+-- NO --+-- ) -+
                   +-- YES -+
>+-------------------------+-------------------------------------->
 +- REOPT( --+-- NONE[2] --+-- ) -+
             +-- ALWAYS[3] -+
             +-- ONCE ------+
             +-- AUTO ------+
>+-------------------------+-------------------------------------->
 +- OPTHINT( 'hint-id' ) -+
>+-------------------------+-------------------------------------->
 +- PATH( --+-- schema-name --+-- ) -+
            <-------------- , <-------+
            +-- USER ----------+
>+-------------------------+-------------------------------------->
 +- RELEASE( --+-- COMMIT --+-- ) -+
               +-- DEALLOCATE -+
>+-------------------------+-------------------------------------->
 +- ROUNDING( --+-- CEILING --+-- ) -+
                +-- DOWN -----+
                +-- FLOOR ----+
                +-- HALFDOWN -+
                +-- HALFEVEN -+
                +-- HALFUP ---+
                +-- UP -------+
>+-------------------------+-------------------------------------->
 +- SQLRULES( --+-- DB2 --+-- ) -+
               +-- STD -+
>+-------------------------+-------------------------------------->
 +- VALIDATE( --+-- RUN --+-- ) -+
                +-- BIND -+
>+-------------------------+-------------------------------------->
 +- CONCURRENTACCESSRESOLUTION( --+-- USECURRENTLYCOMMITTED --+-- ) -+
                                  +-- WAITFOROUTCOME ---------+
>+-------------------------+-------------------------------------><
 +- PROGAUTH( --+-- DISABLE --+-- ) -+
                +-- ENABLE -+
```

Notes:

[1] If PLAN is not specified, all bind functions will be performed, including error diagnostics, without producing an application plan and without inserting rows into PLAN_TABLE for the option EXPLAIN.
[2] NOREOPT(VARS) can be specified as a synonym of REOPT(NONE)
[3] REOPT(VARS) can be specified as a synonym of REOPT(ALWAYS)

enable-block

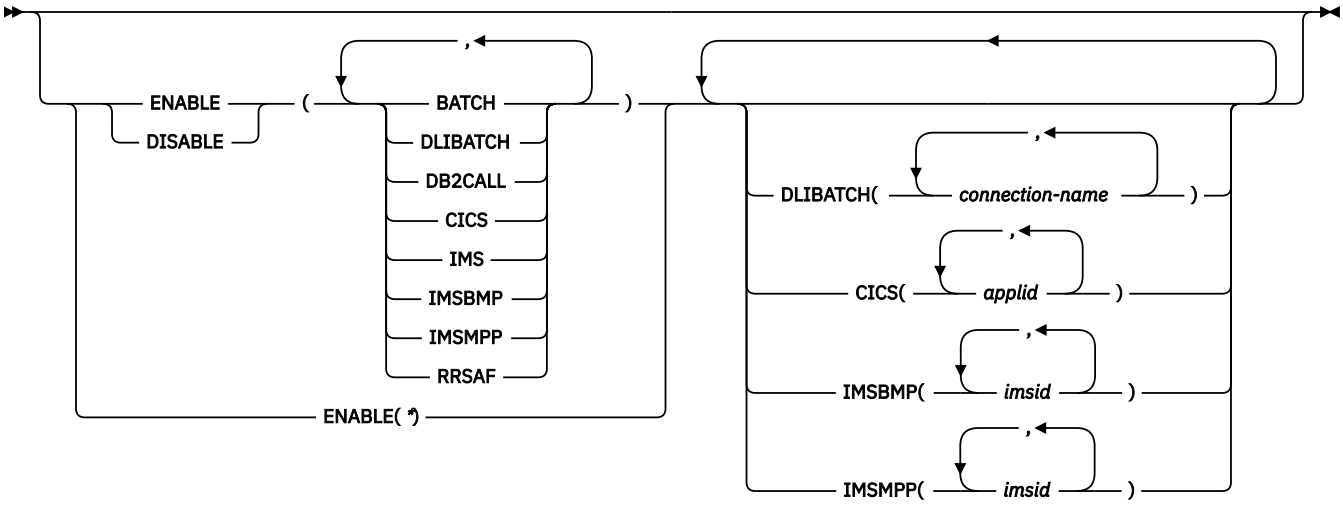

pklist-block

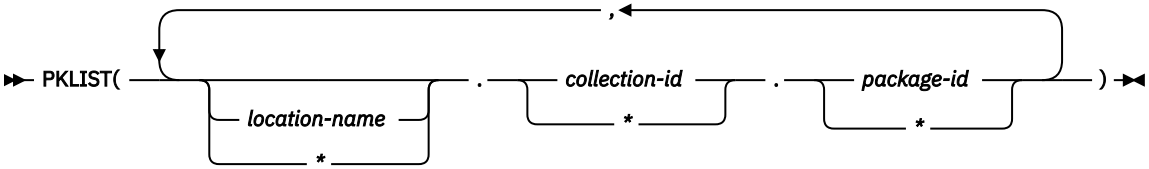

Descriptions for BIND PLAN

(*plan-name*)

Specifies the name of the application plan.

The Db2 catalog record for the *plan-name* value is the NAME column in SYSPLAN catalog table (Db2 SQL).

Other options for BIND PLAN

For descriptions of the other options in the syntax diagram, see Chapter 14, “BIND and REBIND options for packages, plans, and services ,” on page 81.

Usage notes

The MEMBER option is deprecated

Although the BIND PLAN command accepts the MEMBER option, the MEMBER option is deprecated. Use it only when you cannot run BIND PACKAGE to bind DBRMs into packages explicitly. When you specify MEMBER, Db2 binds the DBRMs into packages, and includes those packages in a package list for the specified plan.

Trace information for data sharing members

When this command with group scope is issued in a Db2 data sharing member, it also runs on all other active members. IFICID 090 trace records for other group members can show that the

same command was issued by the SYSOPR authorization ID from the 016.TLPKN5F correlation ID, in addition to the trace records from the member where the original command was issued. See Command scope in Db2 data sharing (Db2 Data Sharing Planning and Administration).

Examples for BIND PLAN

Example: Binding a plan with ISOLATION(CS) for maximum concurrency

This subcommand creates a new plan called IMSONLY. The SQL statements for the plan are in the package DSN8IC12.

An ISOLATION level of cursor stability (CS) provides maximum concurrency when you run the plan, and protects database values only while the program uses them. DEPTM92 owns the plan, but PRODUCTN qualifies any unqualified table, view, index, and alias names that are referenced in the package.

A cache size of 0 indicates that users will not run the plan repeatedly. Caching the names of users authorized to run the plan helps only when the same user runs the plan repeatedly while it is in the EDM pool. Because this is not the case with this plan, there is no need to reserve space in the EDM pool for a cache that the plan does not use.

The option ENABLE(IMS) runs the plan only from an IMS environment (DLI Batch, BMP and MPP). If you attempt to run the plan from another environment, such as TSO Batch, the plan allocation fails.

```
BIND PLAN(IMSONLY) -
  PKLIST(DSN8IC12.*) -
  ACTION(ADD) -
  ISOLATION(CS) -
  OWNER(DEPTM92) -
  QUALIFIER(PRODUCTN) -
  CACHESIZE -
  ENABLE(IMS)
```

Example: Binding a plan for a CICS environment only

The following subcommand creates a new plan called CICSONLY. The plan specifies an isolation level of cursor stability (CS). DEPTM12 owns the plan, but TESTSYS qualifies any unqualified table, view, index, and alias names referenced in the package.

The option ENABLE(CICS) CICS(CON1) runs the plan only from CICS VTAM® node CON1 which is specified in the APPLID parameter of the CICS SIT table. If you attempt to run the plan from another environment or from another CICS VTAM note, the run attempt fails. A cache size of 0 indicates that users will not run the plan repeatedly.

```
BIND PLAN(CICSONLY) -
  PKLIST(DSN8IC12.*) -
  ACTION(ADD) -
  ISOLATION(CS) -
  OWNER(DEPTM12) -
  QUALIFIER(TESTSYS) -
  CACHESIZE(0) -
  ENABLE(CICS) CICS(CON1)
```

Related tasks

Binding application packages and plans (Db2 Application programming and SQL)

Related reference

BIND and REBIND options for packages, plans, and services
There are several options you can use for binding or rebinding packages, plans, and services. Some of the options are common for both BIND and REBIND operations.

BIND PACKAGE subcommand (DSN)
The DSN subcommand BIND PACKAGE builds an application package. Db2 records the description of the package in the catalog tables and saves the prepared package in the directory. BIND PACKAGE also deletes phased-out package copies.

REBIND PLAN command (DSN)

The DSN subcommand REBIND PLAN rebinds an application plan when you make changes to the attributes of the plan, such as the package list.

Chapter 12. BIND QUERY subcommand (DSN)

The DSN subcommand BIND QUERY reads the statement text, default schema, and a set of bind options from every row of DSN_USERQUERY_TABLE, and information from correlated EXPLAIN table rows. When LOOKUP(NO) is in effect, Db2 inserts the pertinent data into certain catalog tables.

The data inserted in the catalog tables creates one or more of the following methods for influencing access path selection for matching SQL statements:

- Overriding the selectivities of predicates.
- Specifying statement-level optimization parameters.
- Specifying statement level access paths.

Environment

You can use BIND QUERY from a DSN session under TSO that runs in either the foreground or background. You can also use the SYSPROC.ADMIN_COMMAND_DSN to submit this subcommand from a remote requester.

The BIND QUERY command succeeds only when the value of the OPTHINTS subsystem parameter is set to YES.

Data sharing scope: Group

Authorization

To issue this command, you must use a privilege set of the process that includes one of the following authorities:

- SQLADM authority
- System DBADM authority
- SYSOPR authority
- SYSCTRL authority
- SYSADM authority

Syntax

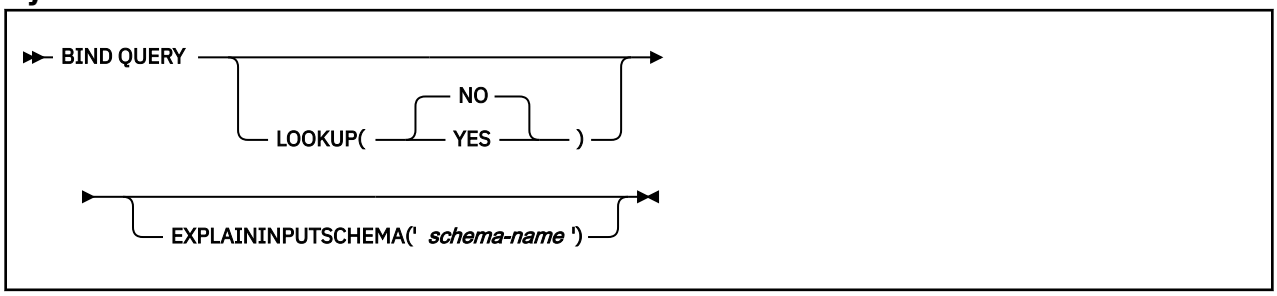

Option description

LOOKUP

Specifies whether to check catalog tables for existing rows that match rows in DSN_USERQUERY_TABLE. LOOKUP(NO) is the default value. When LOOKUP(YES) is in effect, rows are not inserted or modified in the catalog tables. When matching rows are found in the SYSIBM.SYSQUERY and SYSIBM.SYSQUERYPLAN catalog tables, Db2 inserts the value of the SYSQUERYPLAN.QUERYID column into the DSN_USERQUERY_TABLE.QUERYID column of the matching row.

© Copyright IBM Corp. 1983, 2024

(NO)

Db2 reads the information from the DSN_USERQUERY_TABLE and certain EXPLAIN tables and inserts the data into certain catalog tables to influence access path selection for matching statements. NO is the default value.

Depending on the values that are specified in DSN_USERQUERY_TABLE, rows might be read from the following additional input tables:

- *schema*.PLAN_TABLE
- *schema*.DSN_PREDICAT_TABLE
- *schema*.DSN_PREDICATE_SELECTIVITY

Where *schema* is value specified in the EXPLAININPUTSCHEMA option, or the authorization ID of the issuer of the BIND QUERY command.

Depending on the values that are specified in the input tables, data might be inserted in the following catalog tables:

- SYSIBM.SYSQUERY
- SYSIBM.SYSQUERYPLAN
- SYSIBM.SYSQUERYOPTS
- SYSIBM.SYSQUERYPREDICATE
- SYSIBM.SYSQUERYSEL

The catalog table rows influence access path selection for the following methods:

- Overriding the selectivities of predicates.
- Specifying statement-level optimization parameters.
- Specifying statement level access paths.

Db2 issues the following messages to indicate the results of BIND QUERY operation:

- A DSNT280I message for each DSN_USERQUERY_TABLE row that is inserted successfully into the catalog tables.
- A DSNT281I message for each DSN_USERQUERY_TABLE row that is not successfully inserted into the catalog tables.
- A single DSNT290I message if some rows were inserted into catalog tables successfully or a DSNT291I message if no rows were inserted successfully.

(YES)

Db2 reads information from the DSN_USERQUERY_TABLE and looks for the matching rows in the following catalog tables:

- SYSIBM.SYSQUERY
- SYSIBM.SYSQUERYPLAN
- SYSIBM.SYSQUERYOPTS

The catalog tables are not modified or populated with new values. When matching rows exist in the catalog tables, Db2 inserts the value of the SYSQUERY.QUERYID column into the DSN_USERQUERY_TABLE.QUERYID column of the matching row.

New rows are not inserted into the catalog tables when LOOKUP(YES) is specified. Instead, Db2 issues messages to indicate whether existing rows where identified:

- A DSNT280I message for each row in the DSN_USERQUERY_TABLE that has a valid matching row in the SYSIBM.SYSQUERY table.
- A DSNT281I message for each row in DSN_USERQUERY_TABLE that does not have valid matching rows in the SYSIBM.SYSQUERY.

- A single DSNT290I message if some matching rows were found or a DSNT291I message if no matches were found.

EXPLAININPUTSCHEMA

Specifies the schema name of the EXPLAIN tables that are to be used for input during BIND QUERY processing. The schema name must be enclosed in single quotation marks (').

EXPLAININPUTSCHEMA enables you to create separate EXPLAIN tables to be used only as input to the BIND QUERY command. By creating separate input tables, you can eliminate the need to remove unneeded rows that might interfere with BIND QUERY process from the EXPLAIN output tables. When the EXPLAININPUTSCHEMA option is not specified, Db2 uses the tables that are qualified by the authorization ID of the user that issues the BIND QUERY command.

Usage notes

Eligible SQL statements

BIND QUERY only processes the following types of the SQL statements.

- SELECT
- INSERT
- Searched UPDATE
- UPDATE WHERE CURRENT OF
- Searched DELETE
- DELETE WHERE CURRENT OF
- MERGE
- TRUNCATE

If you enter any SQL statement types other than those on the list above, Db2 issues a message.

DECP options

The following options must be the same when the BIND QUERY command is issued as when packages were bound, for static SQL statements, or when the statements were prepared, for dynamic SQL statements:

- CCSID
- Decimal point
- String delimiter

Cached dynamic SQL statements

During BIND QUERY time, after Db2 processes a query successfully, the query will be removed from the dynamic statement cache when the following conditions are met.

- The query is a dynamic SQL statement
- The access path to be specified exists in the PLAN_TABLE
- The query was prepared and saved in the dynamic statement cache before the BIND QUERY time and value of the OPTHINTS subsystem parameter is set to 'YES'

Trace information for data sharing members

When this command with group scope is issued in a Db2 data sharing member, it also runs on all other active members. IFICID 090 trace records for other group members can show that the same command was issued by the SYSOPR authorization ID from the 016.TLPKN5F correlation ID, in addition to the trace records from the member where the original command was issued. See Command scope in Db2 data sharing (Db2 Data Sharing Planning and Administration).

Examples

Example: Specifying statement-level optimization parameters

Suppose that you created an instance of DSN_USERQUERY_TABLE under your schema, and populated it with rows that specify optimization parameters. Use the following subcommand to create corresponding rows in the SYSIBM.SYSQUERY and SYSIBM.SYSQUERYOPTS catalog tables.

```
BIND QUERY
```

Related tasks

Influencing access path selection (Db2 Performance)

Related reference

BIND and REBIND options for packages, plans, and services

There are several options you can use for binding or rebinding packages, plans, and services. Some of the options are common for both BIND and REBIND operations.

OPTIMIZATION HINTS field (OPTHINTS subsystem parameter) (Db2 Installation and Migration)

SYSQUERY catalog table (Db2 SQL)

SYSQUERYPLAN catalog table (Db2 SQL)

SYSQUERYPREDICATE catalog table (Db2 SQL)

SYSQUERYSEL catalog table (Db2 SQL)

Related information

DSNT280I (Db2 Messages)

DSNT281I (Db2 Messages)

DSNT290I (Db2 Messages)

DSNT291I (Db2 Messages)

Chapter 13. BIND SERVICE subcommand (DSN)

The BIND SERVICE (DSN) subcommand builds an application package that represents a Db2 REST service. Db2 records the description of the service in the catalog tables and saves the prepared package in the directory.

Environment

You can issue BIND SERVICE from a DSN session under TSO that runs in the foreground or background.

Data sharing scope: Group

Authorization

The package owner must have the required authorization, such as SYSADM or DATAACCESS authority, to execute the SQL statement embedded in a package and to build the package.

If BIND SERVICE is issued in a trusted context defined with the ROLE AS OBJECT OWNER clause, the package owner must be a role with the role ownership to execute the command. If the OWNER option of the command is specified, the owner will be assumed a role. If the OWNER option is not specified, the role of the binder becomes the owner. If the trusted context is not specified with the ROLE AS OBJECT OWNER clause, the current rules for BIND ownership apply.

For VALIDATE(BIND), Db2 verifies the authorization at bind time. For VALIDATE(RUN), Db2 verifies the authorization initially at bind time, but if the authorization check fails, Db2 rechecks it at run time. The following table summarizes the authorization required for running BIND SERVICE, depending on the bind options that you specify and, in the case of the ACTION (ADD) option, the value of the BIND NEW PACKAGE field on installation panel DSNTIPP1:

Table 5. Required privileges for BIND SERVICE options

Bind option	Installation panel field BIND NEW PACKAGE (BINDNV subsystem parameter)	Authorization required to run BIND PACKAGE
ADD, using the default owner or primary authorization ID	BINDADD	The primary authorization ID or role must have one of the following to add a new package to a collection: • The BINDADD system privilege and either the CREATE IN privilege or PACKADM authority on the collection or on all collections • SYSADM, SYSCTRL, or system DBADM authority
ADD, using the default owner or primary authorization ID	BIND	The primary authorization ID or role must have one of the following to add a new package to a collection: • The BINDADD system privilege and either the CREATE IN privilege or PACKADM authority on the collection or on all collections • SYSADM, SYSCTRL, or system DBADM authority • PACKADM authority on the collection or on all collections • The BIND package privilege

© Copyright IBM Corp. 1983, 2024

Table 5. Required privileges for BIND SERVICE options (continued)

Bind option	Installation panel field BIND NEW PACKAGE (BINDNV subsystem parameter)	Authorization required to run BIND PACKAGE
ADD, specifying an OWNER other than the primary authorization ID"1" on page 76	BINDADD	If any of the authorization IDs or roles of the process has SYSADM authority, SYSCTRL authority, or system DBADM authority, OWNER *authorization-id* can be any value, when subsystem parameter SEPARATE_SECURITY is set to NO. If any of the authorization IDs has the BINDAGENT privilege granted from the owner, *authorization-id* can specify the grantor as OWNER. Otherwise, the OWNER *authorization-id* must be one of the primary or secondary authorization IDs of the binder. If you specify OWNER *authorization-id* , Db2 first checks the OWNER and then the binder for the necessary bind privilege. If the binder does not have SYSADM, SYSCTRL, or system DBADM authority, the authorization ID or role of the OWNER must have one of the following to add a new package to a collection: • The BINDADD system privilege and either the CREATE IN privilege or PACKADM authority on the collection or on all collections • SYSADM, SYSCTRL, or system DBADM authority
ADD, specifying an OWNER other than the primary authorization ID"1" on page 76	BIND	If any of the authorization IDs or roles of the process has SYSADM authority, SYSCTRL authority, or system DBADM authority, OWNER *authorization-id* can be any value, when subsystem parameter SEPARATE_SECURITY is set to NO. If any of the authorization IDs has the BINDAGENT privilege granted from the owner, *authorization-id* can specify the grantor as OWNER. Otherwise, the OWNER *authorization-id* must be one of the primary or secondary authorization IDs of the binder. If you specify OWNER *authorization-id* , Db2 first checks the OWNER and then the binder for the necessary bind privilege. If the binder does not have SYSADM, SYSCTRL, or system DBADM authority, the authorization ID or role of the OWNER must have one of the following to add a new package to a collection: • The BINDADD system privilege and either the CREATE IN privilege or PACKADM authority on the collection or on all collections • SYSADM, SYSCTRL, or system DBADM authority • PACKADM authority on the collection or on all collections • The BIND package privilege

Note:

1. If both the OWNER and the binder do not have the necessary bind privilege and the IFCID 140 trace is active, a trace record is written with details about the authorization failure.

Syntax

```
BIND SERVICE ( [ location-name . ]1 collection-id ) name-block
  [ DESCRIPTION ( description-string ) ]
  [ OWNER ( authorization-id ) ] [ QUALIFIER( qualifier-name ) ]
  [ ACTION (ADD) ] [ CURRENTDATA( NO ) ]
  [ DEFER(PREPARE) | NODEFER(PREPARE) ] [ DEGREE( 1 | ANY ) ]
  [ DESCSTAT( YES ) ] [ ENCODING( UNICODE ) ]
  [ SQLERROR( NOPACKAGE ) ] [ EXPLAIN( NO | YES ) ]
  [ GETACCELARCHIVE( NO | YES ) ]
  [ IMMEDWRITE( NO | YES ) ] [ ISOLATION( CS | RR | RS | UR | NC ) ]
  [ REOPT( NONE2 | ALWAYS3 | ONCE | AUTO ) ] [ OPTHINT( 'hint-id' ) ]
  [ ACCELERATOR( 'accelerator-name' ) ]
  [ ACCELERATIONWAITFORDATA( 'nnnn.m' ) ]
  [ PATH( schema-name | USER , ... ) ]
  [ ROUNDING ( CEILING | DOWN | FLOOR | HALFDOWN | HALFEVEN | HALFUP | UP ) ]
  [ QUERYACCELERATION( NONE | ENABLE | ENABLEWITHFAILBACK | ELIGIBLE | ALL ) ]
  [ RELEASE( COMMIT | DEALLOCATE ) ] [ VALIDATE( RUN | BIND ) ]
  [ CONCURRENTACCESSRESOLUTION( USECURRENTLYCOMMITTED | WAITFOROUTCOME ) ]
  [ APREUSE( NONE | ERROR | WARN ) ] [ APCOMPARE( NONE | WARN | ERROR ) ]
  [ BUSTIMESENSITIVE( YES | NO ) ]
  [ SYSTIMESENSITIVE( YES | NO ) ]
  [ ARCHIVESENSITIVE( YES | NO ) ] [ APPLCOMPAT( applcompat-level ) ]
```

Notes:

[1] The location name can only be specified when the COPY option is specified.

[2] NOREOPT(VARS) can be specified as a synonym of REOPT(NONE)
[3] REOPT(VARS) can be specified as a synonym of REOPT(ALWAYS)

name-block

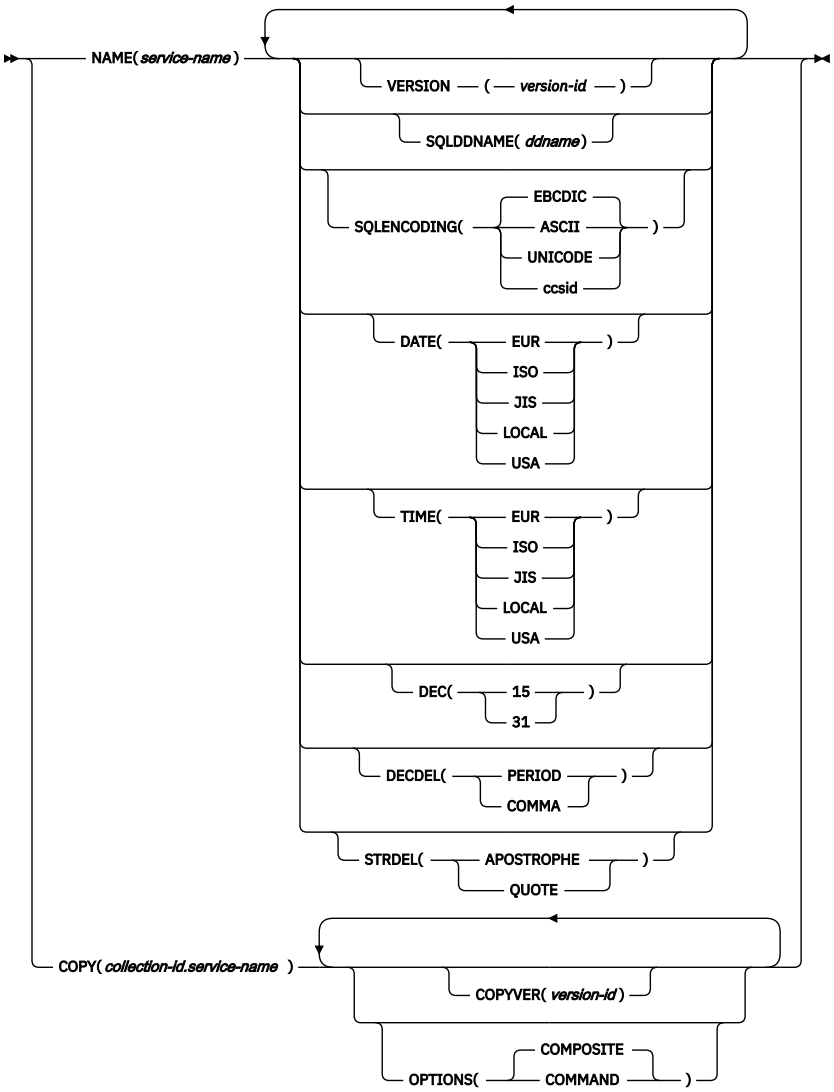

Descriptions

location-name

The location of the DBMS where the Db2 REST service is bound and its description resides. The location name must be defined in the SYSIBM.LOCATIONS catalog table. If that table does not exist or if the DBMS is not in it, you receive an error message. See LOCATIONS catalog table (Db2 SQL).

The default is the local DBMS.

collection-id

Specifies the collection to contain the package for the REST service. There is no default.

collection-id can be an ordinary or a delimited identifier. The delimiter for *collection-id* is double quotation marks ("). If *collection-id* is delimited, Db2 does not convert the value to uppercase.

If the *collection-id* value for a REST service is a delimited identifier, it can contain these characters:

A–Z

```
a-z
0-9
_ @ # $
```

For descriptions of the other options shown in the syntax diagram, see Chapter 14, “BIND and REBIND options for packages, plans, and services ,” on page 81.

Usage notes

Trace information for data sharing members

When this command with group scope is issued in a Db2 data sharing member, it also runs on all other active members. IFICID 090 trace records for other group members can show that the same command was issued by the SYSOPR authorization ID from the 016.TLPKN5F correlation ID, in addition to the trace records from the member where the original command was issued. See Command scope in Db2 data sharing (Db2 Data Sharing Planning and Administration).

Related tasks

Creating a Db2 REST service (Db2 REST services)

Related reference

FREE SERVICE command (DSN)

The FREE SERVICE (DSN) subcommand deletes an application package that represents a Db2 REST service. The command also removes the corresponding entry from the catalog tables.

BIND and REBIND options for packages, plans, and services

There are several options you can use for binding or rebinding packages, plans, and services. Some of the options are common for both BIND and REBIND operations.

Chapter 14. BIND and REBIND options for packages, plans, and services

There are several options you can use for binding or rebinding packages, plans, and services. Some of the options are common for both BIND and REBIND operations.

Default values for bind and rebind options

The *default* for an option is the value used if you omit the entire option.

A default of *plan value* for BIND PACKAGE means that the default is the same as the value determined during the bind or rebind of the plan to which the package is appended at run time.

A default of *existing value* for REBIND PLAN or REBIND PACKAGE means that the default is the value that was determined during the previous bind or rebind of the plan or package that you are rebinding.

Catalog records for bind and rebind options

The Db2 catalog records information about plans, packages, and services. Such information is mainly stored in the following tables: SYSIBM.SYSPLAN, SYSIBM.SYSPACKAGE, and SYSIBM.DSNSERVICE.

For all other cases, the option descriptions note the specific defaults, which Db2 assigns at bind time. If a specific default value exists, that value is underlined.

ACCELERATOR bind option

The ACCELERATOR option sets the preferred target accelerator server or servers for accelerated static SQL queries and is the default value for the CURRENT ACCELERATOR special register used for dynamic SQL queries when the SET CURRENT ACCELERATOR statement is not issued.

Command option	Option values	Used with
ACCELERATOR	*accelerator-name*	• BIND PACKAGE • REBIND PACKAGE "1" on page 81 • BIND SERVICE

Note:

1. The ACCELERATOR bind option is not valid for REBIND of packages for advanced triggers.

The bind option value affects runtime behavior only.

If a specified accelerator does not exist during bind time, a warning is issued.

If the specified preferred accelerator server is not enabled or available at runtime, Db2 will send the queries to other available accelerator servers.

Default values for ACCELERATOR

Process	Default value
BIND SERVICE	None
BIND PACKAGE	None
REBIND PACKAGE	Existing value

© Copyright IBM Corp. 1983, 2024

Related concepts

Bind options for locks (DB2 Performance)

Related tasks

Enabling acceleration of SQL queries (Db2 Performance)

BIND options for distributed applications (DB2 Performance)

Related reference

CURRENT OPTIMIZATION HINT (DB2 SQL)

Bind options for remote access (DB2 Application programming and SQL)

ACCELERATIONWAITFORDATA bind option

The ACCELERATIONWAITFORDATA bind option specifies the maximum amount of time, if any, that an accelerator will delay a static SQL query while the accelerator waits for the replication of committed Db2 data changes that occurred prior to Db2 running the query. If the bind option is specified, it also provides the initial value for the CURRENT QUERY ACCELERATION WAITFORDATA special register that is used for dynamic queries, if a SET statement has not been issued for the special register.

Command option	Option values	Used with
ACCELERATIONWAITFORDATA	(*nnnn*.*m*)	• BIND PACKAGE • BIND SERVICE • REBIND PACKAGE "1" on page 82

Note:

1. The ACCELERATIONWAITFORDATA bind option is not valid for REBIND of packages for advanced triggers.

The delay wait time begins when the query reaches the accelerator, not when the query starts running in Db2. For more information about how to determine appropriate WAITFORDATA delay time values for query acceleration with replication in your environment, see the WAITFORDATA information in the IBM Db2 Analytics Accelerator for z/OS documentation.

The ACCELERATIONWAITFORDATA bind option applies to both static accelerated queries and dynamic accelerated queries in a Db2 package:

- For static accelerated queries in a Db2 package, this bind option is used when the QUERYACCELERATION bind option is also set to a valid value other than NONE to request that static queries be accelerated. If the QUERYACCELERATION bind option value is set to NONE, the ACCELERATIONWAITFORDATA bind option is accepted and the package is bound with the option value; however, the option will not apply to static SQL queries because no static queries will be accelerated.
- For dynamic accelerated queries in a Db2 package, if the ACCELERATIONWAITFORDATA bind option is specified, it also initializes the CURRENT QUERY ACCELERATION WAITFORDATA special register, which is used for dynamic queries if a SET statement hasn't been issued for that special register. Initializing CURRENT QUERY ACCELERATION WAITFORDATA to a value greater than 0 specifies that Db2 and the accelerator will apply WAITFORDATA delay behavior and restrictions to all dynamic queries to be accelerated from this Db2 package. The CURRENT QUERY ACCELERATION special register must also have a valid value other than NONE to request that dynamic queries be accelerated.

Important: When a non-zero value is specified for the ACCELERATIONWAITFORDATA bind option, Db2 and the accelerator will apply other WAITFORDATA delay behaviors, restrictions, and requirements to all queries that will be accelerated from the application package. These behaviors, restrictions, and requirements can cause queries that were formerly accelerated successfully to no longer be accelerated or to fail. See SET CURRENT QUERY ACCELERATION WAITFORDATA statement (Db2 SQL) for more information about WAITFORDATA behaviors, restrictions, and requirements.

Option descriptions for ACCELERATIONWAITFORDATA

(*nnnn.m*)
A DECIMAL(5,1) numeric-constant value that specifies the maximum number of seconds that the accelerator will delay a query while the accelerator waits for the replication of committed Db2 data changes that occurred prior to Db2 running the query.

You can specify a value in the range of 0.0 - 3600.0 seconds. For example, a value of 20.0 represents 20.0 seconds (or 20000 milliseconds), and a value of 30.5 represents 30.5 seconds (or 30500 milliseconds). The maximum value of 3600.0 means they the query is delayed for 3600 seconds.

You can also specify the value as an INTEGER numeric-constant value ranging from 0 - 3600 seconds, which Db2 will convert to a DECIMAL(5,1) value.

Default values for ACCELERATIONWAITFORDATA

Process	Default value
BIND PACKAGE	None
REBIND PACKAGE	None

Related tasks
Enabling acceleration of SQL queries (Db2 Performance)
Related reference
CURRENT QUERY ACCELERATION WAITFORDATA special register

ACQUIRE bind option

The ACQUIRE bind option specifies that resources for the packages in the plan are to be acquired when the application first accesses them.

Command option	Option values	Used with
ACQUIRE	(USE) (ALLOCATE) (deprecated)	• BIND PLAN • REBIND PLAN

This behavior is the default, regardless of whether you specify ACQUIRE(USE), ACQUIRE(ALLOCATE), which has been deprecated, or neither option.

The ACQUIRE option does not affect page, row, LOB or XML locks.

Option descriptions for ACQUIRE

(USE)
Acquires table space locks only when the application program first uses them.

(ALLOCATE)
This option has no effect. ALLOCATE is deprecated. If you specify ACQUIRE(ALLOCATE) Db2 issues a warning and uses ACQUIRE(USE).

Default values for ACQUIRE

Process	Default value
BIND PLAN	USE
BIND PACKAGE	N/A
REBIND PLAN	USE
REBIND PACKAGE	N/A

There is no ACQUIRE option for packages. A package always acquires resources when it first uses them, as if you specified ACQUIRE(USE).

Catalog records for ACQUIRE

See the ACQUIRE column of the SYSPLAN catalog table.

Related concepts

Bind options for locks (Db2 Performance)

Related reference

RELEASE bind option

The RELEASE option determines when to release resources that a program uses, either at each commit point or when the program terminates.

ACTION bind option

The ACTION option determines whether the object (plan or package) replaces an existing object with the same name or is new.

Command option	Option values	Used with
ACTION	(REPLACE) (REPLACE) REPLVER "1" on page 84 (REPLACE) RETAIN "2" on page 84 (ADD)	• BIND PACKAGE • BIND PLAN • BIND SERVICE

Note:

1. The REPLVER keyword is valid only for BIND PACKAGE.
2. The RETAIN keyword is valid only for BIND PLAN.

Option descriptions for ACTION

(REPLACE)

The object replaces an existing one with the same identifier, and a new entry replaces the old one in the catalog table SYSPLAN or SYSPACKAGE. If no object with the given identifier already exists, the bind process creates the new object and a new entry.

The authorization ID designated explicitly or implicitly by the option OWNER becomes the owner of the new object. If that authorization ID is not the previous owner, all grants of privileges for the object that the previous owner issued change to name the new owner as the grantor.

If the bind fails, the old object and its entry remain.

For BIND PACKAGE: You cannot use REPLACE with a remote package bound with either of the options ENABLE or DISABLE. The attempt causes the bind to fail.

REPLVER (*version-id*) (For BIND PACKAGE only)

Replaces a specific version of the package, identified by *version-id*. If the package with the specified *version-id* does not exist, the bind fails.

version-id is an undelimited identifier. Db2 does not convert the value to uppercase or change it in any other way.

The default for *version-id* comes from the DBRM if you use the MEMBER option on BIND, or from the COPYVER option if you use the COPY option.

RETAIN (For BIND PLAN only)
Preserves EXECUTE privileges when you replace the plan. If ownership of the plan changes, the new owner grants the privileges BIND and EXECUTE to the previous owner.

RETAIN is *not* the default. If you do not specify .RETAIN, everyone but the plan owner loses the EXECUTE privilege (but not the BIND privilege). If plan ownership changes, the new owner grants the BIND privilege to the previous owner.

(ADD)
Adds a new object, but does not replace an existing one. If the object name already exists in the catalog, the bind fails. If the bind fails for any reason, the bind process does not produce a new package or plan and makes no entry in the catalog.

Replacing a version of a package (REPLVER): ACTION(REPLACE) REPLVER can have different effects, depending on the situation. For example, assume that DBRM1 is the name of the member that contains the DBRM for the package, and that A and B are the names of two versions of the package. Suppose that you bind version A with the following command:

```
BIND PACKAGE(COLL1) MEMBER(DBRM1) ACTION(REPLACE) REPLVER(B)
```

- If neither DBRM1, version A, nor version B exist in the Db2 catalog, the command fails because version B is not in the catalog. No new package is added.
- If DBRM1 and version B, but not version A, exist in the Db2 catalog, then version A replaces version B. As a result, version A exists in the catalog, and version B no longer exists in the catalog.
- If DBRM1 and version A exist in the catalog, but not version B, the command fails because version B is not in the catalog. Version A continues to exist.
- If DBRM1 and both versions A and B exist in the catalog, the command fails because version A already exists.

Default values for ACTION

Process	Default value
BIND SERVICE	ADD
BIND PLAN	REPLACE
BIND PACKAGE	REPLACE
REBIND PLAN	REPLACE
REBIND PACKAGE	N/A

Catalog records for ACTION

See the SYSPLAN or SYSPACKAGE catalog tables.

APCOMPARE bind option

The APCOMPARE option determines whether the new access paths are different from the older access paths.

Command option	Option values	Used with
APCOMPARE	(NO) (NONE) (WARN) (ERROR)	• BIND PACKAGE • BIND PLAN • BIND SERVICE • REBIND PACKAGE "1" on page 86

Command option	Option values	Used with
		• REBIND PLAN • REBIND TRIGGER PACKAGE

Note:

1. The bind option is not valid for REBIND of packages for advanced triggers.

Option descriptions for APCOMPARE

(NO)
Db2 does not compare access paths.

(NONE)
Db2 does not compare access paths.

([WARN])
Db2 compares the old and new access paths for each matching statement. If the access paths are structurally dissimilar, Db2 sends message DSNT285I and continues processing the package.

([ERROR])
Db2 compares the old and new access paths for each matching statement. If the access paths are structurally dissimilar, Db2 sends message DSNT285I and terminates package processing.

The APCOMPARE option is ignored for packages and package copies that were bound prior to DB2 9. You can identify the version on which a package or package copy was bound by checking the RELBOUND column in the SYSIBM.SYSPACKAGE or SYSIBM.SYSPACKCOPY catalog table.

Statements that reference temporal tables or archive tables: Db2 uses statement text as the matching criteria when it searches for older access paths in the prior package to evaluate. However, for static statements that reference temporal tables or archive tables, Db2 uses additional matching criteria. The reason is that statements that reference temporal tables or archive tables might be bound once or twice, depending on the value of the bind options SYSTIMESENSITIVE and ARCHIVESENSITIVE. In the following situations, the statement is bound twice:

- SYSTIMESENSITIVE is set to YES, and the statement references a system-period temporal table or bitemporal table.
- ARCHIVESENSITIVE is set to YES, and the statement references an archive table.

When the statement is bound twice, implicit predicates are added to the statement during the second bind. This process is called *implicit query transformation*. The type of implicit query transformation is identified in the EXPANSION_REASON column of PLAN_TABLE. Therefore, in addition to matching statement text, Db2 also checks that the access path in the prior package and in the current package have the same implicit predicate.

Default values for APCOMPARE

Process	Default value
BIND SERVICE	NONE
BIND PLAN	N/A
BIND PACKAGE	NONE
REBIND PLAN	NONE
REBIND PACKAGE	NONE

Related concepts

Archive-enabled tables and archive tables (Introduction to Db2 for z/OS)
Temporal tables and data versioning (Db2 Administration Guide)

Related tasks

Analyzing access path changes at bind or rebind (Db2 Performance)

Reusing and comparing access paths at bind and rebind (Db2 Performance)

Related reference

Db2 catalog tables (Db2 SQL)

ARCHIVESENSITIVE bind option

The ARCHIVESENSITIVE option determines whether references to archive-enabled tables in both static and dynamic SQL statements are affected by the value of the SYSIBMADM.GET_ARCHIVE global variable.

SYSTIMESENSITIVE bind option

The SYSTIMESENSITIVE option specifies whether references to system-period temporal tables in both static and dynamic SQL statements are affected by the value of the CURRENT TEMPORAL SYSTEM_TIME special register.

PLAN_TABLE (Db2 Performance)

APPLCOMPAT bind option

The APPLCOMPAT option specifies the application compatibility behavior for static SQL statements in the package. It also sets the initial value of CURRENT APPLICATION COMPATIBILITY special register, which controls the application compatibility behavior for dynamic SQL statements in the package.

Command option	Option values	Used with
APPLCOMPAT	(V*vv*R*rr*M*mmm*) (V11R1) (V10R1)	• BIND PACKAGE • BIND PLAN • BIND SERVICE • REBIND PACKAGE "1" on page 87 • REBIND PLAN • REBIND TRIGGER PACKAGE

Note:

1. The APPLCOMPAT bind option is not valid for REBIND of packages for native SQL procedures or advanced triggers.

The following values can be specified:

Option descriptions for APPLCOMPAT

(V*vv*R*r*M*mmm*)

Compatibility with the behavior of the identified Db2 function level. For example, V12R1M510 specifies compatibility with the highest available Db2 12 function level. The equivalent function level or higher must be activated.

For the new capabilities that become available in each application compatibility level, see:

- SQL changes in Db2 13 application compatibility levels
- SQL changes in Db2 12 application compatibility levels

Tip: Extra program preparation steps might be required to increase the application compatibility level for applications that use data server clients or drivers to access Db2 for z/OS. For more information, see Setting application compatibility levels for data server clients and drivers (Db2 Application programming and SQL).

(V12R1)
Compatibility with the behavior of Db2 12 function level 500. This value has the same result as specifying V12R1M500.

(V11R1)
Compatibility with the behavior of Db2 11 new-function mode. After migration to Db2 12, this value has the same result as specifying V12R1M100. For more information, see V11R1 application compatibility level (Db2 Application programming and SQL)

(V10R1)
Compatibility with the behavior of DB2 10 new-function mode. For more information, see V10R1 application compatibility level (Db2 Application programming and SQL).

Default values for APPLCOMPAT

Process	Default value
BIND SERVICE	APPLCOMPAT subsystem parameter[1]
BIND PLAN	N/A
BIND PACKAGE	APPLCOMPAT subsystem parameter[1]
REBIND PLAN	N/A
REBIND PACKAGE	Existing value. If there is no existing value, the APPLCOMPAT subsystem parameter is used.[1]
REBIND TRIGGER PACKAGE	Existing value. If there is no existing value, the APPLCOMPAT subsystem parameter is used.[1]

Note:

1. The APPLCOMPAT subsystem parameter specifies the default value to use when the APPLCOMPAT bind option is not specified in a BIND command, or the APPLCOMPAT value is not specified or stored in the Db2 catalog for a REBIND command. Its value does not prevent specific applications from running at higher application compatibility levels. For more information, see APPL COMPAT LEVEL field (APPLCOMPAT subsystem parameter) (Db2 Installation and Migration).

Related concepts
Application compatibility levels in Db2 12 (Db2 Application programming and SQL)

Related reference
CURRENT APPLICATION COMPATIBILITY special register (Db2 SQL)
SET CURRENT APPLICATION COMPATIBILITY statement (Db2 SQL)

APRETAINDUP bind option

The APRETAINDUP option determines whether or not Db2 retains an old package copy when access paths of the old copy are identical to the incoming copy.

Command option	Option values	Used with
APRETAINDUP	(YES) (NO)	• REBIND PACKAGE [1] • REBIND TRIGGER PACKAGE

Note:

1. The APRETAINDUP bind option is not valid for REBIND of packages for advanced triggers.

This option only applies when PLANMGMT(BASIC) or PLANMGMT(EXTENDED) are in effect.

Option descriptions for APRETAINDUP

(YES)
Db2 retains an old package copy

([NO])
Db2 does not retain an old package copy

Default values for APRETAINDUP

Process	Default value
BIND PLAN	N/A
BIND PACKAGE	N/A
REBIND PLAN	N/A
REBIND PACKAGE	YES
REBIND TRIGGER PACKAGE	YES

Related reference
PLANMGMT bind option
The PLANMGMT option retains, during a rebind operation, all relevant package information (such as metadata, query text, dependencies, authorizations, and access paths) in catalog tables and in the directory.

APREUSE bind option

The APREUSE option specifies whether Db2 tries to reuse previous access paths for SQL statements in a package. Db2 uses information about the previous access paths from the directory to create a hint.

Command option	Option values	Used with
APREUSE	(NONE) (NO) (ERROR) (WARN)	• BIND PACKAGE • BIND PLAN • BIND SERVICE • REBIND PACKAGE "1" on page 89 • REBIND PLAN • REBIND TRIGGER PACKAGE

Note:

1. The APREUSE bind option is not valid for REBIND of packages for advanced triggers.

The access path hint is not guaranteed to succeed in all cases. For example, a hint for an access path that relies on objects (such as indexes) that no longer exist cannot be reused. Version incompatibilities might also prevent access paths from being reused. Some access paths cannot be reused because of ambiguity in underlying hint. For example, a hint to use a merge join indicates the type of join to use and the number of matching columns, but the names of the matching columns are not available.

When APREUSE(ERROR) is specified for a BIND PACKAGE command, Db2 tries to locate the access path information from a package that has a matching identity based on the following criteria:

- Location
- Collection ID
- Name
- Version

If no such a package exists, Db2 tries to locate the most recently created version of a package that otherwise matches. When a prior version of a matching package is reused, Db2 issues a DSNT294I message. Even if a prior version exists, the set of static SQL statements in a previous version might not be identical to the set of statements in the new package. In such a situation, the APREUSE option only applies to statements that are identical in both versions.

Db2 issues a DSNT292I warning message when it cannot locate any previous package, and ignores the APREUSE option for that package.

Db2 reports the number of statements that were processed, the number of statements that reused the previous access path and the number of statements that could not reuse the previous access path in a DSNT286I message.

If package copies exist for a package, you can also specify the APREUSESOURCE option to specify the package copy to use for access path reuse.

Option descriptions for APREUSE

(NONE)
Db2 does not try to reuse previous access paths for statements in the package.

(NO)
An accepted synonym for NONE.

([ERROR])
Db2 tries to reuse the previous access paths for SQL statements in the package. If statements in the package cannot reuse the previous access path, the bind operation for the package that contains the statement ends, and processing continues for the next package. Db2 indicates the number of statements that cannot be reused in any package in a message. New and changed statements in a package never prevent the completion of the bind or rebind operation, even though no previous access path is available for reuse.

([WARN])
Db2 tries to reuse the previous access paths for SQL statements in the package. Db2 ignores the previous access path and generates a new access path for any statement in the package that cannot reuse the previous access. The bind operation for the package completes, regardless of whether some access paths cannot be reused. Db2 indicates the number of statements that cannot be reused in any package in a message.

The APREUSE option is ignored for package copies that were bound prior to DB2 9. The RELBOUND column in the SYSIBM.SYSPACKAGE or SYSIBM.SYSPACKCOPY catalog tables indicates the Db2 release on which a package or package copy was last bound or rebound.

Statements that reference temporal tables or archive tables: Db2 uses statement text as the matching criteria when it searches for older access paths in the prior package to reuse. However, for static statements that reference temporal tables or archive tables, Db2 uses additional matching criteria. The reason is that statements that reference temporal tables or archive tables might be bound once or twice, depending on the value of the bind options SYSTIMESENSITIVE and ARCHIVESENSITIVE. In the following situations, the statement is bound twice:

- SYSTIMESENSITIVE is set to YES, and the statement references a system-period temporal table or bitemporal table.
- ARCHIVESENSITIVE is set to YES, and the statement references an archive table.

When the statement is bound twice, implicit predicates are added to the statement during the second bind. This process is called *implicit query transformation*. The type of implicit query transformation is identified in the EXPANSION_REASON column of PLAN_TABLE. Therefore, in addition to matching statement text, Db2 also checks that the access path in the prior package and in the current package have the same implicit predicate.

Default values for APREUSE

Process	Default value
BIND SERVICE	NO
BIND PLAN	N/A
BIND PACKAGE	NO
REBIND PLAN	N/A
REBIND PACKAGE	NO
REBIND TRIGGER PACKAGE	NO
Automatic rebind	WARN

Related concepts

Archive-enabled tables and archive tables (Introduction to Db2 for z/OS)

Temporal tables and data versioning (Db2 Administration Guide)

Related tasks

Reusing and comparing access paths at bind and rebind (Db2 Performance)

Related reference

Db2 catalog tables (Db2 SQL)

"APREUSESOURCE bind option" on page 91

The APREUSESOURCE bind option, when used with the APREUSE bind option, specifies which package copy to use for EXPLAIN information for access path reuse processing.

ARCHIVESENSITIVE bind option

The ARCHIVESENSITIVE option determines whether references to archive-enabled tables in both static and dynamic SQL statements are affected by the value of the SYSIBMADM.GET_ARCHIVE global variable.

SYSTIMESENSITIVE bind option

The SYSTIMESENSITIVE option specifies whether references to system-period temporal tables in both static and dynamic SQL statements are affected by the value of the CURRENT TEMPORAL SYSTEM_TIME special register.

PLAN_TABLE (Db2 Performance)

APREUSESOURCE bind option

The APREUSESOURCE bind option, when used with the APREUSE bind option, specifies which package copy to use for EXPLAIN information for access path reuse processing.

Command option	Option values	Used with
APREUSESOURCE	(CURRENT) (PREVIOUS) (ORIGINAL)	• REBIND PACKAGE "1" on page 91 • REBIND TRIGGER PACKAGE

Note:

1. The APREUSESOURCE bind option is not valid for REBIND of packages for advanced triggers.

Option descriptions for APREUSESOURCE

You can use the APREUSESOURCE bind option to specify which package copy is used for access path reuse when the APREUSE option is specified.

(CURRENT)
The EXPLAIN information that is stored in the current package copy is used for access path reuse processing.

(PREVIOUS)
The EXPLAIN information that is stored in the previous package copy is used for access path reuse processing.

(ORIGINAL)
The EXPLAIN information that is stored in the original package copy is used for access path reuse processing.

Related concepts

Package copies for plan management (Db2 Performance)

Related tasks

Reusing and comparing access paths at bind and rebind (Db2 Performance)

Related reference

APREUSE bind option
The APREUSE option specifies whether Db2 tries to reuse previous access paths for SQL statements in a package. Db2 uses information about the previous access paths from the directory to create a hint.

SWITCH bind option
The SWITCH option causes the previous copy or original copy of a package to become the current copy of the package.

Related information

DSNT333I (Db2 Messages)

ARCHIVESENSITIVE bind option

The ARCHIVESENSITIVE option determines whether references to archive-enabled tables in both static and dynamic SQL statements are affected by the value of the SYSIBMADM.GET_ARCHIVE global variable.

Command option	Option values	Used with
ARCHIVESENSITIVE	(YES) (NO)	• BIND PACKAGE • BIND PLAN • BIND SERVICE • REBIND PACKAGE "1" on page 92 • REBIND PLAN • REBIND TRIGGER PACKAGE

Note:

1. The ARCHIVESENSITIVE bind option is not valid for REBIND of packages for complied SQL functions, native SQL procedures, or advanced triggers.

Option descriptions for ARCHIVESENSITIVE

(YES)
References to archive-enabled tables are affected by the value of the SYSIBMADM.GET_ARCHIVE built-in global variable.

(NO)
References to archive-enabled tables are not affected by the value of the SYSIBMADM.GET_ARCHIVE built-in global variable.

Interactions with the PLANMGMT option: If you plan to change this option and the PLANMGMT option in a REBIND command, see "PLANMGMT bind option" on page 140 for the implications.

Defaults for ARCHIVESENSITIVE

Process	Default value
BIND SERVICE	YES
BIND PLAN	N/A
BIND PACKAGE	YES
REBIND PLAN	N/A
REBIND PACKAGE	Existing value
REBIND TRIGGER PACKAGE	Existing value

Related concepts
Archive-enabled tables and archive tables (Introduction to Db2 for z/OS)
Related reference
GET_ARCHIVE (Db2 SQL)

BUSTIMESENSITIVE bind option

The BUSTIMESENSITIVE option determines whether references to application-period temporal tables in both static and dynamic SQL statements are affected by the value of the CURRENT TEMPORAL BUSINESS_TIME special register.

Command option	Option values	Used with
BUSTIMESENSITIVE	(YES) (NO)	• BIND PACKAGE • BIND PLAN • BIND SERVICE • REBIND PACKAGE "1" on page 93 • REBIND PLAN • REBIND TRIGGER PACKAGE

Note:

1. The BUSTIMESENSITIVE bind option is not valid for REBIND of packages for complied SQL functions, native SQL procedures, or advanced triggers.

Option descriptions for BUSTIMESENSITIVE

(YES)
References to application-period temporal tables are affected by the value of the CURRENT TEMPORAL BUSINESS_TIME special register.

(NO)
References to application-period temporal tables are not affected by the value of the CURRENT TEMPORAL BUSINESS_TIME special register

Interactions with the PLANMGMT option: If you plan to change this option and the PLANMGMT option in a REBIND command, see "PLANMGMT bind option" on page 140 for the implications.

Default values for BUSTIMESENSITIVE

Process	Default value
BIND SERVICE	YES

Process	Default value
BIND PLAN	N/A
BIND PACKAGE	YES
REBIND PLAN	N/A
REBIND PACKAGE	Existing value
REBIND TRIGGER PACKAGE	Existing value

Related reference
CURRENT TEMPORAL BUSINESS_TIME special register (Db2 SQL)

CACHESIZE bind option

The CACHESIZE option determines the size (in bytes) of the authorization cache acquired in the EDM pool for the plan.

Command option	Option values	Used with
CACHESIZE	(*decimal-value*)	• BIND PLAN • REBIND PLAN

At run time, the authorization cache stores user IDs authorized to run. Consulting the cache can avoid a catalog lookup for checking authorization to run the plan.

(*decimal-value*)
The size of the cache can range 0 - 4096. Nonzero values that are not multiples of 256 round to the next highest multiple of 256. CACHESIZE(0) specifies creating no cache when the plan runs.

Default values for CACHESIZE

Process	Default value
BIND PLAN	Value of AUTHCACH subsystem parameter
BIND PACKAGE	N/A
REBIND PLAN	Existing value
REBIND PACKAGE	N/A

Catalog record for CACHESIZE

See the CACHESIZE column in SYSPLAN catalog table (Db2 SQL).

COLLID bind option

The COLLID option specifies that any DBRMs in a plan are bound to packages. It applies only for rebinds of plans that were created prior to DB2 10 with DBRMs bound directly into the plan. The resulting packages are bound to the specified plan, and the resulting plan includes only packages. It does not include any DBRMs.

Command option	Option values	Used with
COLLID	(*collection-id*) (*)	• REBIND PLAN

Option descriptions for COLLID

(*collection-id*)
Specifies the collection identifier for the new packages.

(*)
Specifies that the default collection identifier, DSN_DEFAULT_COLLID_*plan-name*, is to be used for the new packages.

If you do not specify COLLID in REBIND PLAN, and the plan was created prior to DB2 10 and has DBRMs bound directly into it, COLLID(*) is in effect.

Catalog records for COLLID

See the following catalog tables: SYSPACKAGE catalog table (Db2 SQL), SYSPACKAUTH catalog table (Db2 SQL), SYSPACKDEP catalog table (Db2 SQL), and SYSPACKSTMT catalog table (Db2 SQL).

CONCENTRATESTMT bind option

The CONCENTRATESTMT option specifies whether to enforce statement concentration at the package level.

Command option	Option values	Used with
CONCENTRATESTMT	(NO) (YES)	• BIND PACKAGE • REBIND PACKAGE "1" on page 95

Note:

1. The CONCENTRATESTMT bind option is not valid for REBIND of packages for native SQL procedures.

Option descriptions for CONCENTRATESTMT

(NO)
Specifies that statement concentration is not enabled for the package.

([YES])
Specifies that statement concentration is enabled for the package. This option is a package-level alternative to specifying the statement attribute CONCENTRATE STATEMENTS WITH LITERALS in PREPARE statements.

If the CONCENTRATE STATEMENTS attribute is explicitly included in a PREPARE statement, the setting for the prepared statement overrides the CONCENTRATESTMT bind option.

Default values for CONCENTRATESTMT

Process	Default value
BIND PACKAGE	NO
REBIND PACKAGE	NO

Related concepts
Reoptimization for statements with replaced literal values (Db2 Performance)
Related reference
PREPARE statement (Db2 SQL)

CONCURRENTACCESSRESOLUTION bind option

The CONCURRENTACCESSRESOLUTION option specifies which concurrent access resolution option to use for statements in a package.

Command option	Option values	Used with
CONCURRENTACCESSRESOLUTION	(WAITFOROUTCOME) (USECURRENTLYCOMMITTED)	• BIND PACKAGE • BIND PLAN • BIND SERVICE • REBIND PACKAGE "1" on page 96 • REBIND PLAN • REBIND TRIGGER PACKAGE

Note:

1. The CONCURRENTACCESSRESOLUTION bind option is not valid for REBIND of packages for native SQL procedures or advanced triggers.

Option descriptions for CONCURRENTACCESSRESOLUTION

(USECURRENTLYCOMMITTED)

Specifies that when a read transaction requires access to a row that is locked by an INSERT or DELETE operation, the database manager can access the currently committed row, if one exists, and continue to the next row. The read transaction does not need to wait for the INSERT or DELETE operation to commit. This clause applies when the isolation level in effect is cursor stability or read stability.

Under the following circumstances, if USECURRENTLYCOMMITTED is specified for a package, WAITFOROUTCOME behavior is used instead:

- The table space on which the package operates is not a universal table space.
- XML data is being selected, and the data does not support multiple XML versions. In this case, the Db2 database manager cannot determine whether the data has been committed.

(WAITFOROUTCOME)

Specifies that when a read transaction requires access to a row that is locked by an INSERT or DELETE operation, the read transaction must wait for a COMMIT or ROLLBACK operation to complete.

Default values for CONCURRENTACCESSRESOLUTION

Process	Default value
BIND SERVICE	None
BIND PLAN	None
BIND PACKAGE	None
REBIND PLAN	None
REBIND PACKAGE	None
REBIND TRIGGER PACKAGE	None

CONCURRENTACCESSRESOLUTION has no default. The following table shows how Db2 handles uncommitted INSERTs for all combinations of CONCURRENTACCESSRESOLUTION settings and subsystem parameter SKIPUNCI settings.

Table 6. Db2 behavior for combinations of settings for subsystem parameter SKIPUNCI and bind option CONCURRENTACCESSRESOLUTION

SKIPUNCI value	CONCURRENTACCESSRESOLUTION value	Skip uncommitted INSERTs or wait for COMMIT or ROLLBACK
YES	USECURRENTLYCOMMITTED	Skip uncommitted INSERTs
YES	WAITFOROUTCOME	Wait for COMMIT or ROLLBACK
YES	Not specified	Skip uncommitted INSERTs
NO	USECURRENTLYCOMMITTED	Skip uncommitted INSERTs
NO	WAITFOROUTCOME	Wait for COMMIT or ROLLBACK
NO	Not specified	Wait for COMMIT or ROLLBACK

COPY bind option

The COPY option copies an existing package or service, and names that package or service.

Command option	Option values	Used with
COPY	(*collection-id.package-id*) (*collection-id.package-id*) COPYVER (*version-id*) (*collection-id.package-id*) COPYVER (*version-id*) *copy-options* (*collection-id.package-id*) *copy-options* (*collection-id.service-name*) (*collection-id.service-name*) COPYVER (*version-id*) (*collection-id.service-name*) COPYVER (*version-id*) *copy-options* (*collection-id.service-name*) *copy-options*	• BIND PACKAGE • BIND SERVICE

Copying the package or service recalculates the access paths in the copy.

To create a remote copy, this option copies SQL statements from a package at your local server. Therefore, you must hold the COPY privilege or its equivalent at the **local** server.

Option descriptions for COPY

(*collection-id*)
The name of the collection that contains the package or service to copy, as listed in column COLLID of catalog table SYSPACKAGE or DSNSERVICE.

collection-id can be an undelimited or a delimited identifier. The delimiter for *collection-id* is double quotation marks ("). If *collection-id* is delimited, Db2 does not convert the value to uppercase. A delimited *collection-id* can include letters, digits, or special characters other than a period (.) or blank.

(*package-id*)
The name of the package to copy, as listed in column NAME of catalog table SYSPACKAGE.

package-id can be an undelimited or a delimited identifier. The delimiter for *package-id* is double quotation marks ("). If *package-id* is delimited, Db2 does not convert the value to uppercase. A delimited *package-id* can include letters, digits, or special characters other than a period (.) or blank.

(*service-name*)

The name of the service to be copied , as listed in column NAME of catalog table DSNSERVICE.

service-name can be an unlimited or delimited identifier. The deliminator for *service-name* is double quotation marks ("). If *service-name* is delimited, Db2 does not convert the value to uppercase.

COPYVER(*version-id*)

An optional specification that determines the version of the package or service to copy. For packages, the default version for *version-id* is the empty string. For services, the default for *version-id* is the default service version.

version-id is an undelimited identifier. Db2 does not convert the value to uppercase or change it in any other way.

copy-options

Specifies which bind options are used for the new package or service.

OPTIONS(COMPOSITE)

The option values that are specified in the BIND PACKAGE COPY subcommand are used for the package copy. The values for the BIND options that are not specified, except the values of ENABLE, DISABLE, OWNER, and QUALIFIER, are the BIND option values that are in the SYSPACKAGE catalog table row that describes the source package that is to be copied.

The option values that are specified in the BIND SERVICE COPY subcommand are used for the service copy. The values for the BIND options that are not specified, except the values of ENABLE, DISABLE, OWNER, and QUALIFIER, are the BIND option values that are in the DSNSERVICE and SYSPACKAGE catalog table row that describes the source service that is to be copied.

For BIND SERVICE, the server must be Db2 12 for z/OS or later.

OPTIONS(COMMAND)

The option values that are specified in the BIND PACKAGE COPY or BIND SERVICE COPY subcommand are used for the package or service copy. The values for options that are not specified are determined as follows:

- For a local copy, the Db2-defined BIND PACKAGE or BIND SERVICE options defaults are used.
- For a remote copy, the server-defined BIND PACKAGE or BIND SERVICE option defaults are used at the server. For BIND PACKAGE, you must use OPTIONS(COMMAND) when copying to a down-level server or to a non-z/OS Db2 server. A down-level server is any server that is not Db2 12 for z/OS. 1For BIND SERVICE, the server must be Db2 12 for z/OS or later.

Restrictions

- *collection-id.package-id* must identify a package on the local server.
- *collection-id.service-name* must identify a service on the local server.
- You cannot copy to a package or service in the same collection. If you make the copy on the local server, *collection-id.* on the COPY option must not name the collection used on the PACKAGE or SERVICE option.
- When the LOCAL date or time format is in effect at the local site, and you use the COPY option to bind a copy of a local package at a remote site, Db2 uses the ISO format for output values in the remote package unless the SQL statement explicitly specifies a different format. Input values in the remote package can be in one of the standard formats, or in a format that is recognized by the server's local date/time exit.
- The following options are mutually exclusive with the COPY option for BIND SERVICE: NAME, VERSION, SQLDDNAME, SQLENCODING, DATE, TIME, DEC, DECDEL, STRDEL.

Default values for COPY

Process	Default value
BIND PLAN	N/A
BIND PACKAGE	None
BIND SERVICE	None
REBIND PLAN	N/A
REBIND PACKAGE	N/A

COPY has **no default**. If you do not use COPY, you must use MEMBER for BIND PACKAGE or NAME for BIND SERVICE. You cannot use both options.

Copying packages to remote servers

To copy and bind packages from Db2 12 for z/OS to some other server that does not support all the new BIND options in Db2 12, use the OPTIONS(COMMAND) option on BIND PACKAGE COPY. Any options you do not explicitly specify on the BIND PACKAGE subcommand are set to the server's defaults. Using this option can prevent bind errors when you bind and copy packages to servers other than Db2 12 for z/OS.

BIND PACKAGE for remote SQL

To execute SQL statements in the native SQL procedure after a CONNECT SQL statement or SQL statements that contain a three-part name from a remote server, you need a package at the target server. Use the BIND PACKAGE COPY command to specify the following:

- Target location as the target site on the CONNECT/implicit DRDA SQL
- Collection ID as the native SQL procedure's schema
- Package ID as the native SQL procedure's name
- COPYVER as the native SQL procedure's version

For example, to copy a version to a remote server using the BIND PACKAGE command, issue:

```
CREATE PROCEDURE TEST.MYPROC LANGUAGE SQL VERSION ABC ...
BEGIN
...
CONNECT TO SAN_JOSE
...
END
BIND PACKAGE(SAN_JOSE.TEST) COPY(TEST.MYPROC) COPYVER(ABC) ACTION(ADD)
```

BIND PACKAGE with SET CURRENT PACKAGESET and SET CURRENT PACKAGE PATH

To use the SQL statements SET CURRENT PACKAGESET and SET CURRENT PACKAGE PATH, you must use the BIND PACKAGE COPY command to specify the following:

- Target collection ID as the target of the SQL statements
- Source collection ID as the native SQL procedure's schema
- Package ID as the native SQL procedure's name
- COPYVER as the native SQL procedure's version

For example, to use the SQL statement SET CURRENT PACKAGESET with the BIND PACKAGE command , issue:

```
CREATE PROCEDURE TEST.MYPROC LANGUAGE SQL VERSION ABC ...
BEGIN
...
SET CURRENT PACKAGESET = 'COLL2'
```

```
...
END
BIND PACKAGE(COLL2) COPY(TEST.MYPROC) COPYVER(ABC)
                                      ACTION(ADD) QUALIFIER(XYZ)
```

If you need to create a new copy because the native SQL procedure has changed and requires a regeneration, use the BIND COPY ACTION(REPLACE) command.

Catalog records for COPY

See the COPY column in SYSPACKAGE catalog table (Db2 SQL).

Copying services to remote servers

When binding and copying a service to a remote server, both servers must be Db2 12 for z/OS or later.

The following example, copies the existing REST service *payroll.getEmployeeSalary* with a version-id of *Ver2*, to a remote server with the location-name PRODSYS.

The new service has the same *collection-id* as the original service. The QUALIFIER option is also specified for the new service which determines the implicit qualifier for unqualified names of tables, views, indexes, and aliases contained in the service created on the PRODSYS system. The DESCRIPTION option is used to describe the newly copied service.

```
    BIND SERVICE(PRODSYS."payroll") COPY("payroll"."getEmployeeSalary") COPYVER(Ver2)
QUALIFIER(PRODQUAL) DESCRIPTION('This is the PRODSYS copy of getEmployeeSalary')
```

Related tasks

Deploying a native SQL procedure to another Db2 for z/OS server (Db2 Application programming and SQL)

CURRENTDATA bind option

The CURRENTDATA option determines whether to require data currency for read-only and ambiguous cursors when the isolation level of cursor stability is in effect. It also determines whether block fetching can be used for distributed, ambiguous cursors.

Command option	Option values	Used with
CURRENTDATA	(NO) (YES)[1]	• BIND PACKAGE • BIND PLAN • BIND SERVICE • REBIND PACKAGE[2] • REBIND PLAN • REBIND TRIGGER PACKAGE

Note:

1. The CURRENTDATA(YES) option is not valid for REBIND of packages for native REST services.
2. The CURRENTDATA bind option is not valid for REBIND of packages for native SQL procedures or advanced triggers.

Option descriptions

(NO)

Specifies that currency is not required for read-only and ambiguous cursors. Block fetching for distributed, ambiguous cursors is allowed.

If your application attempts to dynamically prepare and execute a DELETE WHERE CURRENT OF statement against an ambiguous cursor, after that cursor is opened, use of CURRENTDATA(NO) is not recommended. You receive a negative SQLCODE if your application attempts a DELETE WHERE CURRENT OF statement for any of the following cursors:

- A cursor that is using block fetching
- A cursor that is using query parallelism
- A cursor that is positioned on a row that is modified by this or another application process

(YES)
Specifies that currency is required for read-only and ambiguous cursors. Db2 acquires page or row locks to ensure data currency. Block fetching for distributed, ambiguous cursors is inhibited.

Restriction for remote rebinds: You cannot use CURRENTDATA when rebinding a package at a remote server. To change the value of CURRENTDATA, you can:

- Issue BIND REPLACE, remotely or locally.
- Free the package and issue BIND ADD, remotely or locally.
- Rebind the package locally at the location where the package resides.

Default values for CURRENTDATA

Process	Default value
BIND SERVICE	NO
BIND PLAN	NO
BIND PACKAGE	NO
REBIND PLAN	Existing value
REBIND PACKAGE	Existing value

Catalog records for CURRENTDATA

See the following columns: DEFERPREP in SYSPACKAGE catalog table (Db2 SQL) and EXPREDICATE in SYSPLAN catalog table (Db2 SQL).

CURRENTSERVER bind option

The CURRENTSERVER option determines the location to connect to before running a plan.

Command option	Option values	Used with
CURRENT SERVER	(*location-name*)	• BIND PLAN • REBIND PLAN

The column CURRENTSERVER in catalog table SYSPLAN records the value of *location-name*. The special register CURRENT SERVER also receives that value at the server when the plan is allocated.

You can use CURRENTSERVER to cause a local application to use data from a remote server without changing the application; however, using CURRENTSERVER causes poor performance and should be avoided where possible. Avoid using CURRENTSERVER with applications that contain explicit CONNECT statements.

Option descriptions for CURRENTSERVER

(*location-name*)
he name of the location to connect to. The catalog table SYSIBM.LOCATIONS must contain this name. If the table does not exist, if the table does not contain the DBMS, or if there are no packages at that location, warning messages occur.

SQL return codes: CURRENTSERVER causes Db2 to execute a CONNECT statement. Db2 does not display or report to the application program any warnings that this CONNECT returns. To display the warnings, use explicit CONNECT statements rather than the CURRENTSERVER bind option.

Default values for CURRENTSERVER

Process	Default value
BIND PLAN	Local database system (regardless of the name of the local location)
BIND PACKAGE	N/A
REBIND PLAN	Existing value
REBIND PACKAGE	N/A

Catalog records for CURRENTSERVER

See the CURRENTSERVER column in SYSPLAN catalog table (Db2 SQL).

DBPROTOCOL bind option

The DBPROTOCOL option specifies the protocol to be used when connecting to a remote site.

Command option	Option values	Used with
DBPROTOCOL	(DRDA) (DRDACBF) "1" on page 102	• BIND PACKAGE • BIND PLAN • REBIND PACKAGE "2" on page 102 • REBIND PLAN

Note:

1. The DBPROTOCOL(DRDACBF) is not valid for BIND PLAN or REBIND PLAN.
2. The DBPROTOCOL bind option is not valid for REBIND of packages for native REST services,native SQL procedures, or advanced triggers.

A copy of the package must be bound to each remote site that is referenced by a three-part name statement or a CONNECT statement.

Option descriptions for DBPROTOCOL

(DRDA)
DBPROTOCOL(DRDA) is passed on BIND PACKAGE, BIND PLAN, REBIND PACKAGE, or REBIND PLAN invocation.

(DRDACBF)
Connections from a Db2 for z/OS requester to a Db2 for z/OS server use package-based continuous block fetch to retrieve read-only result sets from the server.

Package-based continuous block fetch can provide a performance advantage for an application in which all remote SQL statements are read-only queries.

When DRDACBF is specified, the SQL queries in the package that access remote sites must be read-only. Remote UPDATE, DELETE, INSERT and MERGE statements are not allowed. If the application executes a remote statement that creates a unit of recovery on a remote server, the SQL statement fails.

Specify DRDACBF only for packages that meet both of the following conditions:

- The packages are bound on Db2 for z/OS requesters, when application compatibility is set to V11R1 or later.
- The packages connect to Db2 for z/OS servers. When DRDACBF is specified for packages that connect to other types of servers, unpredictable behavior might occur.

Default values for DBPROTOCOL

Process	Default value
BIND PLAN	DRDA
BIND PACKAGE	DRDA
REBIND PLAN	DRDA
REBIND PACKAGE	DRDA

Catalog records for DBPROTOCOL

See the DBPROTOCOL columns in SYSPACKAGE catalog table (Db2 SQL) and SYSPLAN catalog table (Db2 SQL).

Related concepts

"Loading data by using a cursor" in Before running LOAD

Related tasks

Loading data by using the cross-loader function (Db2 Utilities)

Related reference

EXEC SQL (Db2 Utilities)

DATE bind option

The DATE bind option specifies the format of date output that Db2 returns. If a value is not specified, Db2 uses the value specified in the DATE FORMAT field on panel DSNTIP4.

Command option	Option values	Used with

DATE	`(EUR)`
	`(ISO)`
	`(JIS)`
	`(LOCAL)`
	`(USA)`
		• BIND SERVICE

Option descriptions for DATE

`(EUR)`
Use the date format of the IBM standard for Europe.

`(ISO)`
Use the date format of the International Standards Organization.

`(JIS)`
Use the date format of the Japanese Industrial Standard.

(LOCAL)
Use the same date format as specified for the ISO value.

(USA)
Use the date format of the IBM standard for the United States of America.

Default values for DATE

Process	Default value
BIND SERVICE	The value specified in the DATE FORMAT field of the DSNTIP4 subsystem parameter

Related tasks

Creating a Db2 REST service (Db2 REST services)

Related reference

BIND SERVICE subcommand (DSN)
The BIND SERVICE (DSN) subcommand builds an application package that represents a Db2 REST service. Db2 records the description of the service in the catalog tables and saves the prepared package in the directory.

FREE SERVICE command (DSN)
The FREE SERVICE (DSN) subcommand deletes an application package that represents a Db2 REST service. The command also removes the corresponding entry from the catalog tables.

BIND and REBIND options for packages, plans, and services
There are several options you can use for binding or rebinding packages, plans, and services. Some of the options are common for both BIND and REBIND operations.

DEC bind option

The DEC bind option specifies the maximum precision to be used in decimal arithmetic operations. If a value is not specified, Db2 uses the value specified in the DECIMAL ARITHMETIC field on panel DSNTIP4.

Command option	Option values	Used with
DEC	(15) (31)	• BIND SERVICE

Option values for DEC

(15)
Use the 15-digit precision in decimal arithmetic operations.

(31)
Use the 31-digit precision in decimal arithmetic operations.

Default values for DEC

Process	Default value
BIND SERVICE	The value specified in the DECIMAL ARITHMETIC field of the DSNTIP4 subsystem parameter

Related tasks

Creating a Db2 REST service (Db2 REST services)

Related reference

BIND SERVICE subcommand (DSN)

The BIND SERVICE (DSN) subcommand builds an application package that represents a Db2 REST service. Db2 records the description of the service in the catalog tables and saves the prepared package in the directory.

FREE SERVICE command (DSN)
The FREE SERVICE (DSN) subcommand deletes an application package that represents a Db2 REST service. The command also removes the corresponding entry from the catalog tables.

BIND and REBIND options for packages, plans, and services
There are several options you can use for binding or rebinding packages, plans, and services. Some of the options are common for both BIND and REBIND operations.

DECDEL bind option

The DECDEL bind option designates whether a period (.) or a comma (,) is used as the decimal point indicator in decimal and floating point literals. If a value is not specified, DB2 uses the value specified in the DECIMAL POINT IS field on panel DSNTIPF.

Command option	Option values	Used with
DECDEL	`(COMMA)` `(PERIOD)`	• BIND SERVICE

Option values for DECDEL

`(COMMA)`
Use a comma (,) as the decimal point indicator.

`(PERIOD)`
Use a period (.) as the decimal point indicator.

Default values for DECDEL

Process	Default value
BIND SERVICE	The value specified in the DECIMAL POINT IS field of the DSNTIPF subsystem parameter

Related tasks

Creating a Db2 REST service (Db2 REST services)

Related reference

BIND SERVICE subcommand (DSN)
The BIND SERVICE (DSN) subcommand builds an application package that represents a Db2 REST service. Db2 records the description of the service in the catalog tables and saves the prepared package in the directory.

FREE SERVICE command (DSN)
The FREE SERVICE (DSN) subcommand deletes an application package that represents a Db2 REST service. The command also removes the corresponding entry from the catalog tables.

BIND and REBIND options for packages, plans, and services

There are several options you can use for binding or rebinding packages, plans, and services. Some of the options are common for both BIND and REBIND operations.

DEFER and NODEFER bind options

The DEFER and NODEFER options determine whether to defer preparation for dynamic SQL statements that refer to remote objects, or to prepare them immediately.

Command option	Option values	Used with
NODEFER DEFER	NODEFER(PREPARE) DEFER(PREPARE) DEFER(INHERITFROMPLAN) "1" on page 106	• BIND PACKAGE • BIND PLAN • BIND SERVICE • REBIND PACKAGE "2" on page 106 • REBIND PLAN

Note:

1. The `DEFER(INHERITFROMPLAN)` option is not valid for REBIND of packages for native REST services.
2. The DEFER and NODEFER bind options are not valid for REBIND of packages for native SQL procedures or advanced triggers.

If you defer preparation, the dynamic statement is prepared when Db2 first encounters a statement of the type EXECUTE, OPEN, or DESCRIBE that refers to the dynamic statement.

For BIND and REBIND PACKAGE, if neither option is specified, and REOPT(NONE) applies:

- For local binds, the package inherits the plan's option at run time.
- For remote bind the default is NODEFER(PREPARE) at the remote Db2 server.

If you specify the bind option REOPT(ALWAYS), REOPT(AUTO), or REOPT(ONCE), Db2 sets the bind option DEFER(PREPARE) automatically.

You cannot use both DEFER and NODEFER.

Option descriptions for DEFER and NODEFER

`NODEFER(PREPARE)`
Does not defer preparation.

`DEFER(PREPARE)`
Defers preparation.

`DEFER(INHERITFROMPLAN)`
Enables a local package to inherit the value of the DEFER option from the plan, regardless of whether the package was bound remotely or locally.

If you bind a package remotely with the DEFER(INHERITFROMPLAN) option and the remote server does not understand the INHERITFROMPLAN value, the server might return an error.

The DEFER(INHERITFROMPLAN) value is not applied in the following situations, because no associated plan exists:

- If you bind the application locally and then copy the package to a remote server.
- If you bind an application that uses RRSAF.
- For any packages that are created for utilities

In these cases, NODEFER(PREPARE) is in effect for the package.

DEFER(PREPARE) and distributed processing

Specify the bind option DEFER(PREPARE) to improve performance, instead of NODEFER(PREPARE), and when binding dynamic SQL for DRDA access. Db2 does not prepare the dynamic SQL statement until that statement executes. (The exception to this situation is dynamic SELECT, which combines PREPARE and DESCRIBE, regardless of whether the DEFER(PREPARE) option is in effect.) When a dynamic SQL statement accesses remote data, the PREPARE and EXECUTE statements can be transmitted over the network together and processed at the remote location. Responses to both statements can be sent back to the local subsystem together. This reduces network traffic, which improves the performance of the dynamic SQL statement.

PREPARE statements that contain INTO clauses are not deferred.

To defer the preparation of an SQL statement in an application, bind or rebind the application with the option DEFER(PREPARE). This defers PREPARE messages for SQL statements that refer to a remote object until either:

- The statement executes
- The application requests a description of the results of the statement

If you choose to defer PREPARE statements, after the EXECUTE or DESCRIBE statement, you should code your application to handle any SQL error codes or SQLSTATEs that the PREPARE statement might return. You can defer PREPARE statements only if you specify the bind option DEFER(PREPARE).

Default values for DEFER and NODEFER

Process	Default value
BIND PLAN	NODEFER
BIND PACKAGE	Plan value
REBIND PLAN	Existing value
REBIND PACKAGE	Existing value

Catalog records for DEFER and NODEFER

See the DEFERPREP column in SYSPLAN catalog table (Db2 SQL) or the DEFERPREPARE column in SYSPACKAGE catalog table (Db2 SQL).

DEGREE bind option

The DEGREE option determines whether to attempt to run a query using parallel processing to maximize performance.

Command option	Option values	Used with
DEGREE	(1) (ANY)	• BIND PACKAGE • BIND PLAN • BIND SERVICE • REBIND PACKAGE "1" on page 107 • REBIND PLAN

Note:

1. The DEGREE bind option is not valid for REBIND of packages for native SQL procedures or advanced triggers.

For plans, DEGREE has no effect.

Limitations: If you bind plans or packages using DEGREE(ANY), the space required in the EDM pool could increase by 50% to 70%.

Default values for DEGREE

Process	Default value
BIND SERVICE	1
BIND PLAN	1
BIND PACKAGE	1
REBIND PLAN	Existing value
REBIND PACKAGE	Existing value

Catalog records for DEGREE

See the DEGREE column in SYSPACKAGE catalog table (Db2 SQL) and SYSPLAN catalog table (Db2 SQL).

DEPLOY bind option (deprecated)

The DEPLOY option deploys a compiled SQL function or a native SQL procedure.

Deprecated function: The DEPLOY bind option is deprecated. For best results, deploy compiled SQL functions and native SQL procedures to multiple environments by issuing the same CREATE or ALTER statements separately in each Db2 environment.

Command option	Option values	Used with
DEPLOY	(*collection-id.package-id*) COPYVER(*version-id*)	• BIND PACKAGE

Option descriptions for DEPLOY

(*collection-id*)
The name of the collection that contains the package to deploy, as listed in column COLLID of catalog table SYSPACKAGE.

(*package-id*)
The name of the package to deploy, as listed in column NAME of catalog table SYSPACKAGE.

COPYVER (*version-id*)
Determines the version of the package to deploy. The default for *version-id* is the empty string.

version-id is an undelimited identifier. Db2 does not convert the value to uppercase or change it in any other way.

Specify BIND PACKAGE DEPLOY only when the target Db2 is a Db2 for z/OS server. You can use the ADMIN_COMMAND_DSN or DSNACCTS procedure to submit this command from a remote requester environment.

BIND PACKAGE DEPLOY must not be specified for the following:

- A routine package that is obfuscated with the built-in WRAP function
- FL 507 A package that is generated for a version of a procedure using a CREATE statement whose statement text contains an OR REPLACE or SPECIFIC clause

If you specify DEPLOY, the only other options that you can specify are PACKAGE, QUALIFIER, ACTION, OWNER, QUERYACCELERATION, and GETACCELARCHIVE. If you do not specify QUALIFIER or OWNER, their default values are the authorization ID that issues the BIND PACKAGE DEPLOY command.

Using DEPLOY with the ACTION option:

If you specify ACTION(ADD) for a version that does not exist at the target location, Db2 creates or adds a new version of the SQL function or a native SQL procedure and its associated package while keeping the logic from the source object. Db2 adds a new version if an SQL function or a native SQL procedure with the same target name already exists.

If you specify ACTION(REPLACE), Db2 replaces the version specified in COPYVER. If you specify REPLVER, the version ID must be the same as the COPYVER version ID or Db2 returns TSO error message, DSNE977E.

Defaults values for DEPLOY

Process	Default value
BIND PLAN	N/A
BIND PACKAGE	None
REBIND PLAN	N/A
REBIND PACKAGE	N/A

DEPLOY has **no default**. If you do not use DEPLOY, you must use MEMBER or COPY.

Catalog records for DEPLOY

See the TYPE column in SYSPACKAGE catalog table (Db2 SQL).

Related tasks

Deploying a native SQL procedure to another Db2 for z/OS server (Db2 Application programming and SQL)

DESCRIPTION bind option

The DESCRIPTION bind option briefly describes the Db2 REST service to be bound.

Command option	Option values	Used with
DESCRIPTION	(*description-string*)	• BIND SERVICE

Option descriptions for DESCRIPTION

(*description-string*)

A brief description of the service that can be up to 250 characters in length. If provided, Db2 stores the value in the DESCRIPTION column of the SYSIBM.DSNSERVICE catalog table.

Default values for DESCRIPTION

Process	Default value
BIND SERVICE	Zero length string

Related tasks

Creating a Db2 REST service (Db2 REST services)

Related reference

BIND SERVICE subcommand (DSN)

The BIND SERVICE (DSN) subcommand builds an application package that represents a Db2 REST service. Db2 records the description of the service in the catalog tables and saves the prepared package in the directory.

FREE SERVICE command (DSN)

The FREE SERVICE (DSN) subcommand deletes an application package that represents a Db2 REST service. The command also removes the corresponding entry from the catalog tables.

BIND and REBIND options for packages, plans, and services
There are several options you can use for binding or rebinding packages, plans, and services. Some of the options are common for both BIND and REBIND operations.

DESCSTAT bind option

The DESCSTAT option determines whether Db2 builds a SQL descriptor area (SQLDA) when binding static SQL statements. This SQLDA is where Db2 returns names of result table columns for a DESCRIBE CURSOR statement.

Command option	Option values	Used with
DESCSTAT	(NO) "1" on page 110 (YES)	• BIND PACKAGE • BIND SERVICE • REBIND PACKAGE "2" on page 110 • REBIND TRIGGER PACKAGE

Note:

1. The DESCSTAT(NO) option is not valid for REBIND of packages for native REST services.
2. The DESCSTAT bind option is not valid for REBIND of packages for native SQL procedures or advanced triggers.

Option descriptions for DESCSTAT

(NO)
Specifies that Db2 does not generate a SQLDA at bind time for static SQL statements. If a DESCRIBE request is received at execution time, Db2 generates an error. However, if the DESCRIBE request comes from a DESCRIBE CURSOR statement, Db2 satisfies the request but provides only data type and length information. Column names are not provided.

(YES)
Specifies that Db2 builds a SQL descriptor area (SQLDA) when binding static SQL statements, so that it can return names of result table columns for a DESCRIBE CURSOR statement. Specifying YES increases the size of some packages because the DESCRIBE SQLDA is now stored with each statically bound SQL SELECT statement.

Default values for DESCSTAT

Process	Default value
BIND SERVICE	YES
BIND PLAN	N/A
BIND PACKAGE	• For a local server: The value of subsystem parameter DESCSTAT on the local subsystem is used. • For a remote server: The value of subsystem parameter DESCSTAT on the remote subsystem is used.
REBIND PLAN	N/A
REBIND PACKAGE	Existing value. If there is no existing value, the DESCSTAT subsystem parameter value is used.
REBIND TRIGGER PACKAGE	Existing value. If there is no existing value, the DESCSTAT subsystem parameter value is used.

Catalog records for DESCSTAT

See the DESCSTAT column in SYSPACKAGE catalog table (Db2 SQL).

Related reference

DESCRIBE FOR STATIC field (DESCSTAT subsystem parameter) (Db2 Installation and Migration)

DISCONNECT bind option

The DISCONNECT option determines which remote connections to destroy during commit operations.

Command option	Option values	Used with
DISCONNECT	(EXPLICIT) (AUTOMATIC) (CONDITIONAL)	• BIND PLAN • REBIND PLAN

The option applies to any application process that uses the plan and has remote connections of any type. Regardless of the value of this option, a commit operation destroys all connections in the release pending state. You can put a connection in the release pending state using the SQL statement RELEASE.

(EXPLICIT)
Destroy only connections in the release pending state. This value allows you maximum flexibility for controlling remote connections.

(AUTOMATIC)
Destroy all remote connections.

(CONDITIONAL)
Destroy all remote connections unless an open cursor defined as WITH HOLD is associated with the connection.

Default values for DISCONNECT

Process	Default value
BIND PLAN	EXPLICIT
BIND PACKAGE	N/A
REBIND PLAN	Existing value
REBIND PACKAGE	N/A

Catalog records for DISCONNECT

See the DISCONNECT column in SYSPLAN catalog table (Db2 SQL).

DYNAMICRULES bind option

The DYNAMICRULES option determines the rules that apply at run time for certain dynamic SQL attributes.

Command option	Option values	Used with
DYNAMICRULES	(RUN) (BIND) (DEFINEBIND) (DEFINERUN) (INVOKEBIND)	• BIND PACKAGE • BIND PLAN • REBIND PACKAGE “1” on page 112 • REBIND PLAN

Command option	Option values	Used with
	(INVOKERUN)	

Note:

1. The DYNAMICRULES bind option is not valid for REBIND of packages for native SQL procedures,native REST services, or advanced triggers.

If DYNAMICRULES is specified for BIND PLAN, the DYNAMICRULES value has an effect only if any of the following conditions are true:

- The MEMBER option is specified. In that case, the generated package inherits the DYNAMICRULES value from the BIND PLAN command. If DYNAMICRULES is specified for REBIND PLAN, the DYNAMICRULES value has no effect.
- An existing package has no DYNAMICRULES value. If BIND PLAN with a DYNAMICRULES value is issued, and the package list includes a package without a DYNAMICRULES value, the package inherits the DYNAMICRULES value from the plan when the package runs.

If DYNAMICRULES is specified for REBIND PLAN, the DYNAMICRULES value has an effect only if an existing package has no DYNAMICRULES value. If REBIND PLAN with a DYNAMICRULES value is issued, and the package list includes the package without a DYNAMICRULES value, the package inherits the DYNAMICRULES value from the plan when the package runs.

The dynamic SQL attributes that DYNAMICRULES affects are:

- The authorization ID that is used to check authorization
- The qualifier that is used for unqualified objects
- The source for application programming options that Db2 uses to parse and semantically verify dynamic SQL statements
- Whether dynamic SQL statements can include GRANT, REVOKE, ALTER, CREATE, DROP, and RENAME statements

In addition to the DYNAMICRULES value, the run time environment of a package controls how dynamic SQL statements behave at run time. The two possible run time environments are:

- The package runs as part of a stand-alone program
- The package runs as a stored procedure or user-defined function package, or runs under a stored procedure or user-defined function

The combination of the DYNAMICRULES value and the run-time environment determine the values for the dynamic SQL attributes. That set of attribute values is called the dynamic SQL statement *behavior*. The four behaviors are: run, bind, define, and invoke.

The following DYNAMICRULES option descriptions include a description of the dynamic SQL statement behavior for each run time environment. This information is summarized in Table 7 on page 115.

Option descriptions for DYNAMICRULES

(RUN)

Processes dynamic SQL statements using the standard attribute values for dynamic SQL statements, which are collectively called *run behavior*:

- Db2 uses the authorization ID of the application process and the SQL authorization ID (the value of the CURRENT SQLID special register) for authorization checking of dynamic SQL statements.
- Db2 uses the value of the CURRENT SCHEMA special register as the default schema of table, view, index, and alias names.
- Dynamic SQL statements use the values of application programming options that were specified during installation. The installation option USE FOR DYNAMICRULES has no effect.
- GRANT, REVOKE, CREATE, ALTER, DROP, and RENAME statements can be executed dynamically.

(BIND)

Processes dynamic SQL statements using the following attribute values, which are collectively called *bind behavior*:

- Db2 uses the authorization ID of the package for authorization checking of dynamic SQL statements.
- Unqualified table, view, index, and alias names in dynamic SQL statements are implicitly qualified with value of the bind option QUALIFIER; if you do not specify QUALIFIER, Db2 uses the authorization ID of the package owner as the default schema.
- The attribute values that are described in Common attribute values for bind, define, and invoke behaviors.
- If you are running a trusted context with a role, or when the owner is a role, Db2 uses the authorization ID of the owner of the package for authorization checking of dynamic SQL statements. The same rules that are used to determine the authorization ID for static (embedded) statements are used for dynamic statements. Db2 uses the authorization ID of the owner of the package for authorization checking of dynamic SQL statements. The privilege set is the privileges that are held by the authorization ID of the owner of the package. The owner can also be a role. The identifier specified in the QUALIFIER option of the bind command that is used to bind the SQL statements is the implicit qualifier for all unqualified tables, views, aliases, indexes, and sequences. If this bind option was not used when the package was created or last rebound, the implicit qualifier is the authorization ID of the owner of the package. The owner can also be a role.

(DEFINEBIND)

Processes dynamic SQL statements using one of two behaviors: *define behavior* or *bind behavior*.

When the package is run as or runs under a stored procedure or user-defined function package, Db2 processes dynamic SQL statements using define behavior, which consists of the following attribute values:

- Db2 uses the authorization ID of the user-defined function or stored procedure owner for authorization checking of dynamic SQL statements in the application package.
- The default qualifier for unqualified objects is the user-defined function or stored procedure owner.
- The attribute values that are described in Common attribute values for bind, define, and invoke behaviors.
- If you are running a trusted context with a role, or when the owner is a role, then define behavior applies only if the dynamic SQL statement is in a package that is run as a stored procedure or user-defined function (or runs under a stored procedure or user-defined function package), and the package is bound with DYNAMICRULES (DEFINEBIND). Db2 uses the authorization ID of the stored procedure or user-defined function owner for authorization checking of dynamic SQL statements in the application package. This can be a primary or secondary authorization ID or a role. In this case, the privilege set is the privileges that are held by the authorization ID of the stored procedure or user-defined function owner. This owner can be a primary or secondary authorization ID or a role. The authorization ID of the stored procedure or user-defined function owner is also the implicit qualifier for unqualified table, view, alias, index, and sequence names. The owner can also be a role.

When the package is run as a stand-alone program, Db2 processes dynamic SQL statements using bind behavior, which is described in BIND keyword.

(DEFINERUN)

Processes dynamic SQL statements using one of two behaviors: *define behavior* or *run behavior*.

When the package is run as or runs under a stored procedure or user-defined function package, dynamic SQL statements have define behavior, which is described in DEFINEBIND keyword.

When the package is run as a stand-alone program, Db2 processes dynamic SQL statements using run behavior, which is described in RUN keyword.

If you are running a trusted context with a role, or when the owner is a role, then define behavior applies only if the dynamic SQL statement is in a package that is run as a stored procedure or user-defined function (or runs under a stored procedure or user-defined function package), and the package is bound with DYNAMICRULES (DEFINERUN). Db2 uses the authorization ID of the stored

procedure or user-defined function owner for authorization checking of dynamic SQL statements in the application package. This can be a primary or secondary authorization ID or a role. In this case, the privilege set is the privileges that are held by the authorization ID of the stored procedure or user-defined function owner. This owner can be a primary or secondary authorization ID or a role. The authorization ID of the stored procedure or user-defined function owner is also the implicit qualifier for unqualified table, view, alias, index, and sequence names. The owner can also be a role.

(INVOKEBIND)

Processes dynamic SQL statements using one of two behaviors: *invoke behavior* or *bind behavior*.

When the package is run as or runs under a stored procedure or user-defined function package, Db2 processes dynamic SQL statements using invoke behavior, which consists of the following attribute values:

- Db2 uses the authorization ID of the user-defined function or stored procedure invoker for authorization checking of dynamic SQL statements in the application package.

  If the invoker is the primary authorization ID of the process or the CURRENT SQLID value, secondary authorization IDs are also checked if they are needed for the required authorization. Otherwise, only one ID, the ID of the invoker, is checked for the required authorization.
- The default qualifier for unqualified objects is the user-defined function or stored procedure invoker.
- The attribute values that are described in "Common attribute values for bind, define, and invoke behavior" on page 115.
- If you are running a trusted context with a role, or when the owner is a role, then invoke behavior applies only if the dynamic SQL statement is in a package that is run as a stored procedure or user-defined function (or runs under a stored procedure or user-defined function package), and the package was bound with DYNAMICRULES (INVOKEBIND). Db2 uses the authorization ID of the stored procedure or user-defined function invoker for authorization checking of dynamic SQL statements in the application package. The invoker can also be a role. The privilege set is the privileges that are held by the authorization ID of the stored procedure or user-defined function invoker. However, if the invoker is the primary authorization ID of the process or the CURRENT SQLID value, secondary authorization IDs are also checked along with the primary authorization ID's role. Therefore, the privilege set is the union of the set of privileges held by each authorization ID of the process and the primary authorization ID's role. The authorization ID of the stored procedure or user-defined function invoker is also the implicit qualifier for unqualified table, view, alias, index, and sequence names. The invoker can also be a role.

When the package is run as a stand-alone program, Db2 processes dynamic SQL statements using bind behavior, which is described in BIND keyword.

(INVOKERUN)

Processes dynamic SQL statements using one of two behaviors: *invoke behavior* or *run behavior*.

When the package is run as or runs under a stored procedure or user-defined function package, Db2 processes dynamic SQL statements using invoke behavior, which is described in INVOKEBIND keyword.

If you are running a trusted context with a role, or when the owner is a role, then invoke behavior applies only if the dynamic SQL statement is in a package that is run as a stored procedure or user-defined function (or runs under a stored procedure or user-defined function package), and the package was bound with DYNAMICRULES (INVOKERUN). Db2 uses the authorization ID of the stored procedure or user-defined function invoker for authorization checking of dynamic SQL statements in the application package. The invoker can also be a role. The privilege set is the privileges that are held by the authorization ID of the stored procedure or user-defined function invoker. However, if the invoker is the primary authorization ID of the process or the CURRENT SQLID value, secondary authorization IDs are also checked along with the primary authorization ID's role. Therefore, the privilege set is the union of the set of privileges held by each authorization ID of the process and the primary authorization ID's role. The authorization ID of the stored procedure or user-defined function invoker is also the implicit qualifier for unqualified table, view, alias, index, and sequence names. The invoker can also be a role.

When the package is run as a stand-alone program, Db2 processes dynamic SQL statements using run behavior, which is described in RUN keyword.

Common attribute values for bind, define, and invoke behavior

The following attribute values apply to dynamic SQL statements in packages that have bind, define, or invoke behavior:

- You can execute the statement SET CURRENT SQLID in a package that is bound with any DYNAMICRULES value. However, Db2 does not use the value of CURRENT SQLID as the authorization ID for dynamic SQL statements.

  Db2 always uses the value of CURRENT SQLID as the qualifier for the EXPLAIN output and optimizer hints input PLAN_TABLE. (If the value of CURRENT SQLID has an alias on PLAN_TABLE and has the appropriate privileges, that PLAN_TABLE is populated.)
- If the value of installation option USE FOR DYNAMICRULES is YES, Db2 uses the application programming default values that were specified during installation to parse and semantically verify dynamic SQL statements. If the value of USE for DYNAMICRULES is NO, Db2 uses the precompiler options to parse and semantically verify dynamic SQL statements.
- GRANT, REVOKE, CREATE, ALTER, DROP, and RENAME statements cannot be executed dynamically.

Remote Db2 servers

For a package that uses DRDA access, Db2 sends the DYNAMICRULES option to the Db2 server at bind time.

Dynamic rules behavior and dynamic SQL attributes

The following table summarizes the dynamic SQL statement attribute values for each behavior.

Table 7. Definitions of dynamic SQL statement behaviors

Dynamic SQL attribute	Value for bind behavior	Value for run behavior	Value for define behavior	Value for invoke behavior
Authorization ID	Package OWNER	Current SQLID	User-defined function or stored procedure owner	Authorization ID of invoker
Default qualifier for unqualified objects	Bind OWNER or QUALIFIER value	Current SQLID	User-defined function or stored procedure owner	Authorization ID of invoker
CURRENT SQLID	Initialized to primary authid. SET SQLID is allowed.	Initialized to primary authid. SET SQLID is allowed.	Initialized to primary authid. SET SQLID is allowed.	Initialized to primary authid. SET SQLID is allowed.
Source for application programming options	As determined by the application defaults parameter DYNRULS	Application programming defaults installation panels	As determined by the application defaults parameter DYNRULS	As determined by the application defaults parameter DYNRULS
Can execute GRANT, REVOKE, CREATE, ALTER, DROP, RENAME?	No	Yes	No	No

Default values for DYNAMICRULES

Process	Default value
BIND PLAN	RUN
BIND PACKAGE	blank, or RUN for packages that run on a remote Db2 for z/OS server."1" on page 116, "2" on page 116
REBIND PLAN	Existing value
REBIND PACKAGE	Existing value

Note:

1. When the package value is blank, the value that is used when the package is run is inherited from the plan value.
2. The default for a package on a remote Db2 for z/OS server is RUN. The default is set by the server.

Catalog records for DYNAMICRULES

See the DYNAMICRULES column in SYSPACKAGE catalog table (Db2 SQL) and SYSPLAN catalog table (Db2 SQL).

Related concepts

Authorization IDs and dynamic SQL (Db2 SQL)
Dynamic rules options for dynamic SQL statements (Db2 Application programming and SQL)
Authorization behaviors for dynamic SQL statements (Managing Security)

ENABLE and DISABLE bind options

The ENABLE and DISABLE options determines which connections can use a plan or package.

Command option	Option values	Used with
ENABLE DISABLE	(*) (BATCH) (CICS) (CICS) CICS (*applid* , ...) (DB2CALL) (DLIBATCH) (DLIBATCH) DLIBATCH (*connection-name* , ...) (IMS) (IMSBMP) (IMSBMP) IMSBMP (*imsid* , ...) (IMSMPP) (IMSMPP) IMSMPP (*imsid* , ...) (REMOTE) "1" on page 116 (RRSAF)	• BIND PACKAGE • BIND PLAN • REBIND PACKAGE "2" on page 116 • REBIND PLAN

Note:

1. The ENABLE(REMOTE) and DISABLE(REMOTE) options are not valid for BIND PLAN or REBIND PLAN.
2. The ENABLE and DISABLE bind options are not valid for REBIND of packages for native SQL procedures,native REST services, or advanced triggers.

Option descriptions for ENABLE and DISABLE

You cannot use both DISABLE and ENABLE. For packages, DISABLE and ENABLE are valid only for local bind operations.

(ENABLE)
Lists the system connection types that can use the plan or package. Connection types not listed cannot use it.

(DISABLE)
Lists the system connection types that cannot use the plan or package. Connection types not listed can use it.

With some connection types you can list connection IDs to identify specific connections of the type to disable or enable.

If you list connection IDs as disabled, any connections not listed for the same connection type are enabled.

If you list connection IDs as enabled, any connections not listed for the same connection type are disabled.

A connection ID is valid only after the keyword that names its corresponding connection type.

Connection types:

(*)
Specifies all valid connection types. Use only with ENABLE.

(BATCH)
Indicates that all TSO connections are either enabled or disabled for the plan or package.

(CICS)
Identifies the CICS Connection. All CICS VTAM node names specified in the CICS SIT table are either enabled or disabled for the plan or package.

(CICS) CICS (*applid* , ...)
Identifies the CICS VTAM node name specified in the APPLID parameter of the CICS SIT table. The CICS VTAM node identified by *applid* is either enabled or disabled for the plan or package.

(DB2CALL)
Indicates that the call attachment facility (CAF) connection is either enabled or disabled for the plan or package.

(DLIBATCH)
Identifies the Data Language I (DL/I) Batch Support Facility connection. All connection identifiers from the DDITV02 data set or the job name in the JCL that the DL/I batch support system needs to have are either enabled or disabled for the plan or package.

(DLIBATCH) DLIBATCH (*connection-name* , ...)
Specifies the connection identifier as from the DDITV02 data set or the job name in the JCL that the DL/I batch support system needs to have. The DL/I batch connection identified by *connection-name* is either enabled or disabled for the plan or package.

(IMS)
Specifies that all Information Management System (IMS) connections, DLIBATCH, IMSBMP, and IMSMPP are either enabled or disabled for the plan or package.

(IMSBMP)
Specifies the IMS connection for the Batch Message Program (BMP) region. All IMS BMP connections identified by the value of IMSID on the CTL parameter EXEC are either enabled or disabled for the plan or package.

(IMSBMP) IMSBMP (*imsid* , ...)
Specifies the value of IMSID on the CTL parameter EXEC. The IMS BMP connection identified by *imsid* is either enabled or disabled for the plan or package.

(IMSMPP)
Specifies the IMS connection for the Message Processing Program (MPP) and IMS Fast Path (IFP) regions. All IMS MPP connections identified by the value of the IMSID on the CTL parameter EXEC. are either enabled or disabled for the plan or package.

(IMSMPP) IMSMPP (*imsid* , ...)
Specifies the value of IMSID on the CTL parameter EXEC. The IMS MPP connection identified by *imsid* is either enabled or disabled for the plan or package.

(REMOTE)
Indicates that all remote connections are either enabled or disabled for the package.

(RRSAF)
Indicates that the RRS attachment facility connection is either enabled or disabled for the plan or package.

Plans that disable a system: If a plan disables a system, then no packages appended to that plan can run from that system, regardless of the ENABLE/DISABLE options. However, if the same packages are appended to other plans that enable the system, those packages can run from that system under those plans.

Interactions with the PLANMGMT option: If you plan to change either of these options and the PLANMGMT option in a REBIND command, see "PLANMGMT bind option" on page 140 for information about the implications.

Default values for ENABLE and DISABLE

Process	Default value
BIND PLAN	ENABLE(*)
BIND PACKAGE	ENABLE(*)
REBIND PLAN	Existing value
REBIND PACKAGE	Existing value

Catalog records for ENABLE and DISABLE

See the following tables: SYSPKSYSTEM catalog table (Db2 SQL) for packages and SYSPLSYSTEM catalog table (Db2 SQL) for plans.

ENCODING bind option

The ENCODING option specifies the application encoding for all host variables in static statements in a plan or package.

Command option	Option values	Used with
ENCODING	(ASCII) (EBCDIC) (UNICODE) "1" on page 118 (*ccsid*)	• BIND PACKAGE • BIND PLAN • Chapter 13, "BIND SERVICE subcommand (DSN)," on page 75 • REBIND PACKAGE "2" on page 119 • REBIND PLAN

Note:

1. Values other than ENCODING(UNICODE) are not valid for BIND SERVICE commands.

2. The ENCODING bind option is not valid for REBIND of packages for native SQL procedures, native REST services, or advanced triggers.

EBCDIC is the only valid option for a plan or package that was precompiled prior to DB2 version 7. If you specify *ccsid* on any plan or package precompiled prior to DB2 version 7, the value of *ccsid* must match the EBCDIC CCSID specified on the installation panel DSNTIPF (the SYSTEM EBCDIC CCSID). You can specify ASCII, UNICODE, or *ccsid*, where *ccsid* is a value other than the SYSTEM EBCDIC CCSID for any plan or package precompiled on DB2 version 7 or later. You might select this option when a data source, such as a terminal emulator, uses a CCSID that is not the same as the SYSTEM EBCDIC CCSID. For example, a user has a terminal emulator with a CCSID of 1047, but the SYSTEM EBCDIC CCSID is 37. In this case, the plan or package being used by that user should be bound with ENCODING (1047).

ENCODING also affects the content of the data that is returned by the SQL statement DESCRIBE. Db2 will return column names, label names, or both (if requested) in the specified application encoding scheme.

Default values for ENCODING

The default package application encoding scheme is not inherited from the plan application encoding option. The default for a package that is bound on a remote Db2 for z/OS system is the remote server's default application encoding scheme. Similarly, when a plan or package is run on a remote Db2 for z/OS server, the specified ENCODING option is ignored. Instead, the remote server's encoding scheme is used.

The following statements set the value of the host variable and do not require the package to be bound into the plan:

```
SET CURRENT PACKAGE SET = :HV ,
SET :HV = CURRENT PACKAGE SET ,
SET :HV = CURRENT PACKAGE PATH ,
SET CURRENT PACKAGE PATH = :HV
```

The host variable uses the system default application encoding scheme, even when the application is bound with the ENCODING (EBCDIC/UNICODE) bind option.

Process	Default value
BIND PLAN	The system default application encoding scheme that was specified at installation time
BIND PACKAGE	The system default application encoding scheme that was specified at installation time
BIND SERVICE	UNICODE
REBIND PLAN	Existing value
REBIND PACKAGE	Existing value

Catalog records for ENCODING

See the ENCODING_CCSID column in SYSPLAN catalog table (Db2 SQL) or SYSPACKAGE catalog table (Db2 SQL).

The value is set as follows:

- For a MIXED=NO subsystem, if ENCODING(ASCII) or ENCODING(EBCDIC) is specified, the SBCS CCSID of the encoding scheme is stored in the catalog.
- For a MIXED=YES subsystem, if ENCODING(ASCII) or ENCODING(EBCDIC) is specified, the mixed CCSID of the encoding scheme is stored in the catalog.
- If ENCODING(UNICODE) is specified, the mixed CCSID (1208) is stored in the catalog, regardless of the MIXED setting.

EXPLAIN bind option

The EXPLAIN option causes the bind process to obtain information about how SQL statements in the package or packages are to execute.

PSPI

Command option	Option values	Used with
EXPLAIN	(NO) (YES) (ONLY) "1" on page 120	• BIND PACKAGE • BIND PLAN • BIND SERVICE • REBIND PACKAGE • REBIND PLAN • REBIND TRIGGER PACKAGE

Note:

1. The EXPLAIN(ONLY) option is not valid for BIND SERVICE or REBIND of packages for native REST services or advanced triggers.

The bind process inserts that information into the table *owner*.PLAN_TABLE. *owner* can be the authorization ID of the owner of the plan or package. Alternatively, the authorization ID of the owner of the plan or package can have an alias as *owner*.PLAN_TABLE that points to the base table, PLAN_TABLE. *owner* must also have the appropriate SELECT and INSERT privileges on that table. This option does not obtain information for statements that access remote objects.

PLAN_TABLE must have a base table and can have multiple aliases with the same table name, PLAN_TABLE, but using different authorization IDs; it cannot be a view or a synonym. It should exist before the bind process begins.

The EXPLAIN option also populates all of the explain tables, except for the following:

- DSN_QUERY_TABLE
- DSN_STATEMENT_CACHE_TABLE

You can get EXPLAIN output for a statement that is embedded in a program that is bound with EXPLAIN(NO) by embedding the SQL statement EXPLAIN in the program. Otherwise, the value of the EXPLAIN option applies to all explainable SQL statements in the program, and to the fullselect portion of any DECLARE CURSOR statements.

In all inserts to *owner*.PLAN_TABLE, the value of QUERYNO is the statement number that the precompiler assigned and placed in the DBRM.

For automatic rebind: EXPLAIN(YES) is in effect if you bind the plan or package with EXPLAIN(YES) and if the value of field EXPLAIN PROCESSING on installation panel DSNTIPO is YES. If EXPLAIN(YES) and VALIDATE(BIND) are in effect and PLAN_TABLE is not correct, the automatic rebind fails.

(NO)
Provides no EXPLAIN information.

(YES)
Inserts information in the tables that are populated by EXPLAIN. No secondary authorization checks for the owner authorization ID are performed during the bind operation. You must grant all privileges and authorities directly to the owner authorization ID. If *owner*.PLAN_TABLE does not exist at bind time, the value of the option VALIDATE determines the success of the bind operation.

- If the value is BIND, the bind fails.
- If the value is RUN, Db2 checks to see if the table exists again at run time. If it still does not exist, the plan or package cannot run. If it does exist, Db2 inserts information in PLAN_TABLE before the plan or package runs.

If neither or both of the optional tables DSN_FUNCTION_TABLE or DSN_STATEMNT_TABLE exist, or if they are defined incorrectly, the bind does not fail.

(ONLY)

Inserts information in the tables that are populated by EXPLAIN. When EXPLAIN(ONLY) is specified, Db2 does not insert a new row or update a row in catalog table SYSIBM.SYSPACKAGE, or permanently insert or update a package in the directory. However, when EXPLAIN(ONLY) is specified, Db2 uses all the resources that it uses for a regular BIND or REBIND. For example, during EXPLAIN(ONLY) processing, Db2 acquires the same locks as it acquires during regular BIND or REBIND processing.

EXPLAIN(ONLY) allows EXPLAIN to be run when the authorization ID of the bind or rebind process does not have the privilege to execute statements in the package. If the command that specifies EXPLAIN(ONLY) refers to a package and version that already exists, the existing package is not dropped or replaced, even if ACTION(REPLACE) is specified. If an error is encountered during population of the EXPLAIN tables, information is not added to the EXPLAIN tables for the statement where the error occurred, and for any subsequent statements.

The EXPLAIN(ONLY) option is also useful for testing whether access paths can be successfully reused before you bind or rebind a package with the APREUSE(ERROR) or APCOMPARE(ERROR) bind options. When EXPLAIN(ONLY) is specified with those options, the PLAN_TABLE is populated with information about all statements in a package, even when reuse or comparison fails for the access path for one or more statements. You can examine the HINT_USED and REMARKS columns to discover which statements in the package that cannot be reused. The access path described by the PLAN_TABLE data for a statement when access path reuse fails describes the new access path that Db2 selects when no reuse or APREUSE(WARN) is specified.

A 'Y' value in the BIND_EXPLAIN_ONLY column indicates PLAN_TABLE rows that are created under this option.

The `EXPLAIN(ONLY)` option is not valid for BIND SERVICE or REBIND of packages for native REST services or advanced triggers.

Invalidation resulting from an unsuccessful rebind: An unsuccessful rebind generating a return code of greater than 4 invalidates the rebind object and rolls back all changes to the object, leaving it as it was before the rebind attempt. However, if the rebind fails because of either the REBIND option EXPLAIN or the SQL statement EXPLAIN (that is, the PLAN_TABLE does not exist or was created incorrectly), Db2 rolls back all changes to the object but does not invalidate the object.

Default values for EXPLAIN

Process	Default value
BIND SERVICE	NO
BIND PLAN	NO
BIND PACKAGE	NO
REBIND PLAN	NO
REBIND PACKAGE	Existing value

Catalog records for EXPLAIN

See the EXPLAIN column in SYSPACKAGE catalog table (Db2 SQL) or SYSPLAN catalog table (Db2 SQL).

PSPI

Related concepts

Investigating SQL performance by using EXPLAIN (Db2 Performance)

Interpreting data access by using EXPLAIN (Db2 Performance)

Related tasks

Capturing access path information in EXPLAIN tables (Db2 Performance)

Related reference
EXPLAIN statement (Db2 SQL)
EXPLAIN tables (Db2 Performance)
SYSPACKAGE catalog table (Db2 SQL)
SYSPLAN catalog table (Db2 SQL)

EXTENDEDINDICATOR bind option

The EXTENDEDINDICATOR option determines whether Db2 recognizes extended indicator variables when the associated package is run.

EXTENDEDINDICATOR

Command option	Option values	Used with
EXTENDEDINDICATOR	(NO) (YES)	• BIND PACKAGE • REBIND PACKAGE "1" on page 122

Note:

1. The EXTENDEDINDICATOR bind option is not valid for REBIND of packages for native SQL procedures, native REST services, or advanced triggers.

(NO)
Specifies that Db2 does not recognize extended indicator variable values. Indicator variables are normal indicator variables; negative indicator variable values are null, and positive or zero indicator variable values are non-null.

(YES)
Specifies that Db2 recognizes extended indicator variable values. If you use any non-recognized indicator variable values or default or unassigned indicator variable-based values in a non-supported location, Db2 generates an error message when the bound statement is running.

Default values for EXTENDEDINDICATOR

Process	Default value
BIND PLAN	N/A
BIND PACKAGE	NO
REBIND PLAN	N/A
REBIND PACKAGE	Existing value

Catalog records for EXTENDEDINDICATOR

See the EXTENDEDINDICATOR column in SYSPACKAGE catalog table (Db2 SQL).

FILTER bind option

The FILTER option lets you delete a set of queries in the SYSIBM.SYSQUERY table under a {tag} value that is specified by the SYSQUERY.USERFILTER column.

Command option	Option values	Used with
FILTER	`'filter-name'`	• Chapter 45, "FREE QUERY subcommand (DSN)," on page 361

Related reference

FREE QUERY subcommand (DSN)
The DSN subcommand FREE QUERY removes from certain catalog tables for one or more queries. If any of the specified queries are in the dynamic statement cache, FREE QUERY purges them from the dynamic statement cache.

SYSQUERY catalog table (Db2 SQL)

FLAG bind option

The FLAG option determines the messages to display during the bind process.

Command option	Option values	Used with
FLAG	(I) (W) (E) (C)	• BIND PACKAGE • BIND PLAN • REBIND PACKAGE "1" on page 123 • REBIND PLAN • REBIND TRIGGER PACKAGE

Note:

1. The FLAG bind option is not valid for REBIND of packages for native SQL procedures.

(I)
All informational, warning, error, and completion messages

(W)
Only warning, error, and completion messages

(E)
Only error and completion messages

(C)
Only completion messages

Rebinding multiple plans or packages: When your REBIND command contains an asterisk (*) and affects many plans or packages, FLAG(E) is recommended to avoid running out of message storage.

Default values for FLAG

Process	Default value
BIND PLAN	I
BIND PACKAGE	I
REBIND PLAN	I
REBIND PACKAGE	I
REBIND TRIGGER PACKAGE	I

GENERIC bind option

The GENERIC option specifies one or more bind options that are supported by the target server, but are not supported as options for BIND PACKAGE or REBIND PACKAGE on the Db2 for z/OS subsystem on which the BIND or REBIND command is issued.

Command option	Option values	Used with
GENERIC	('*string*')	• BIND PACKAGE • REBIND PACKAGE "1" on page 124

Note:

1. The GENERIC bind option is not valid for REBIND of packages for native SQL procedures, native REST services, or advanced triggers..

Do not use GENERIC to specify any of the following options:

- Bind options that are explicitly supported by Db2 for z/OS for BIND PACKAGE or REBIND PACKAGE
- SQL processing options that are explicitly supported by Db2 for z/OS

('*string* ')

One or more pairs of a bind option and its corresponding value. Separate each item by one or more blank spaces.

For example, the following GENERIC option specifies several bind options and their corresponding values:

```
GENERIC( ' option-1 value-1 option-2 value-2..... option-n value-n ' )
```

In this example, *value-1* is specified for bind option *option-1*, *value-2* is specified for bind option *option-2*, and so on.

If you specify a bind option more than once in the GENERIC string, only the first occurrence is used. All subsequent occurrences of the bind option and its corresponding value are ignored. For example, suppose that you specify the following GENERIC option:

```
GENERIC( ' firstoption firstvalue secondoption secondvalue firstoption thirdvalue' )
```

In this example, *firstoption* and *secondoption* are bind options that are sent to the target server with their corresponding values. The third option and value pair (*firstoption thirdvalue*) is ignored, because firstoption is already specified in the string. This pair is not sent to the target server.

The maximum length of the string is 4096 bytes. Within that string, each individual option name cannot exceed 255 characters, and each individual option value cannot exceed 255 characters.

GETACCELARCHIVE bind option

The GETACCELARCHIVE bind option specifies whether a static SQL query that is bound for acceleration retrieves archived data on the accelerator, instead of active data. If the bind option is specified, it also provides the initial value for the CURRENT GET_ACCEL_ARCHIVE special register that is used for dynamic queries, if a SET statement has not been issued for the special register.

When a package that is bound with this bind option runs, the GETACCELARCHIVE value, instead of the GET_ACCEL_ARCHIVE subsystem parameter, provides the initial value for the CURRENT GET_ACCEL_ARCHIVE special register. The CURRENT GET_ACCEL_ARCHIVE special register specifies whether a query that references a table that is archived on an accelerator server uses the archived data. Therefore, by rebinding the application package with the GETACCELARCHIVE bind option, you can also specify that accelerated dynamic SQL queries in an application retrieve only archived data on the accelerator. You can specify this bind option instead of either modifying the application to add an

explicit SET CURRENT GET_ACCEL_ARCHIVE statement or setting the GET_ACCEL_ARCHIVE subsystem parameter. For dynamic SQL queries in a package, the bind option value that is specified overrides the GET_ACCEL_ARCHIVE subsystem parameter. This bind option does not have a default value, so if you do not specify this bind option, the GET_ACCEL_ARCHIVE subsystem parameter initializes the special register.

Command option	Option values	Used with
GETACCELARCHIVE	(NO) (YES)	• BIND PACKAGE • REBIND PACKAGE "1" on page 125

Note:

1. The GETACCELARCHIVE bind option is not valid for REBIND of packages for native SQL procedures or advanced triggers.

Option descriptions for GETACCELARCHIVE

(NO)

Specifies that no static SQL query is bound to retrieve archived data from the accelerator. If the static query also is not bound for acceleration, the query is bound to run in Db2.

If the static query is bound for acceleration because the QUERYACCELERATION bind option was specified, the query is routed to the accelerator when the application runs; however, the query does not retrieve any archived data.

(YES)

Specifies that if all of the following criteria are met, the query is bound for acceleration and retrieves the archived data on the accelerator when the application runs:

- The QUERYACCELERATION bind option is also specified.
- The static SQL query references an accelerated table that has partitioned data archived on an accelerator.
- The static query satisfies the acceleration criteria that is specified by the QUERYACCELERATION bind option.

If the static query does not satisfy the acceleration criteria that is specified by the QUERYACCELERATION bind option, the BIND or REBIND PACKAGE operation fails with an error message for that query.

Default values for GETACCELARCHIVE

Process	Default value
BIND PACKAGE	None
REBIND PACKAGE	None

There is no default value for this bind option. The GETACCELARCHIVE bind option does not inherit the setting from the GET_ACCEL_ARCHIVE subsystem parameter.

Related tasks

Enabling acceleration of SQL queries (Db2 Performance)

IMMEDWRITE bind option

The IMMEDWRITE option indicates whether immediate writes are to be done for updates that are made to group buffer pool dependent page sets or partitions.

Command option	Option values	Used with
IMMEDWRITE	(NO) (YES) (INHERITFROMPLAN) "1" on page 126	• BIND PACKAGE • BIND PLAN • BIND SERVICE • REBIND PACKAGE "2" on page 126 • REBIND PLAN • REBIND TRIGGER PACKAGE

Note:

1. The IMMEDWRITE(INHERITFROMPLAN) option is not valid for REBIND of packages for native REST services.
2. The bind option is not valid for REBIND of packages for native SQL procedures or advanced triggers.

This option is only applicable for data sharing environments. The IMMEDWRITE subsystem parameter has no effect on the IMMEDWRITE bind option at bind time. The following table shows the implied hierarchy of this option as it affects run time.

Option descriptions for IMMEDWRITE

(NO)
Specifies that normal write activity is done. Updated pages that are group buffer pool dependent are written at or before phase one of commit or at the end of abort for transactions that have rolled back.

(YES)
Specifies that updated pages that are group buffer pool dependent are immediately written as soon as the buffer update completes. Updated pages are written immediately even if the buffer is updated during forward progress or during rollback of a transaction. Specifying this option might impact performance.

(INHERITFROMPLAN)

Enables a local package to inherit the value of the IMMEDWRITE option from the plan, regardless of whether the package was bound remotely or locally.

If you bind a package remotely with the IMMEDWRITE(INHERITFROMPLAN) option and the remote server does not understand the INHERITFROMPLAN value, the server might return an error.

The IMMEDWRITE(INHERITFROMPLAN) value is not applied in the following situations, because no associated plan exists:

- If you bind the application locally and then copy the package to a remote server.
- If you bind an application that uses RRSAF.
- For any packages that are created for utilities

In these cases, IMMEDWRITE(NO) is in effect for the package.

Table 8. The implied hierarchy of the IMMEDWRITE option

IMMEDWRITE bind option	IMMEDWRI subsystem parameter	Value at run time
NO	NO	NO
NO	PH1	PH1

Table 8. The implied hierarchy of the IMMEDWRITE option (continued)

IMMEDWRITE bind option	IMMEDWRI subsystem parameter	Value at run time
NO	YES	YES
PH1	NO	PH1
PH1	PH1	PH1
PH1	YES	YES
YES	NO	YES
YES	PH1	YES
YES	YES	YES

Note: The NO and PH1 options are equivalent. The PH1 option is shown for backward compatibility only.

Interactions with the PLANMGMT option: If you plan to change this option and the PLANMGMT option in a REBIND command, see "PLANMGMT bind option" on page 140 for the implications.

Performance implications of IMMEDWRITE

You can use IMMEDWRITE(NO) and IMMEDWRITE(YES) for situations where a transaction spawns another transaction that can run on another Db2 member and that depends on uncommitted updates that were made by the originating transaction.

Specify IMMEDWRITE(NO) to cause group buffer pool dependent pages to be written at or before phase 1 of commit.

Specify IMMEDWRITE(YES) to cause the originating transaction to immediately write its updated GBP-dependent buffers (instead of waiting until the end of commit or rollback), which will ensure that the dependent transaction always gets the same results regardless of whether it runs on the same member or a different member as the originating transaction. IMMEDWRITE(YES) should be used with caution because of its potential impact to performance. The impact will be more significant for plans and packages that do many buffer updates to GBP-dependent pages, and not as noticeable for plans or packages that perform few buffer updates to GBP-dependent pages. The following options can be considered as alternatives to using IMMEDWRITE(YES):

- Always run the dependent transaction on the same Db2 member as the originating transaction.
- Run the dependent transaction with ISOLATION(RR).
- Wait until the completion of phase two of commit before spawning the dependent transaction.
- CURRENTDATA(YES) or ISOLATION(RS) can be used to solve the problem only if the originating transaction updates columns that are not in the WHERE clause of the dependent transaction.

Default values for IMMEDWRITE

Process	Default value
BIND SERVICE	NO
BIND PLAN	NO
BIND PACKAGE	• For a local server: INHERITFROMPLAN • For a remote server: NO
REBIND PLAN	Existing value
REBIND PACKAGE	Existing value

Process	Default value
REBIND TRIGGER PACKAGE	Existing value

ISOLATION bind option

The ISOLATION option determines how far to isolate an application from the effects of other running applications.

Command option	Option values	Used with
ISOLATION	(CS) (RS) (RR) (UR) (NC)	• BIND PACKAGE • BIND PLAN • BIND SERVICE • REBIND PACKAGE "1" on page 128 • REBIND PLAN • REBIND TRIGGER PACKAGE

Note:

1. The ISOLATION bind option is not valid for REBIND of packages for native SQL procedures or advanced triggers.

(CS)
The *cursor stability* option ensures, like repeatable read, that your application does not read a row that another process changes until that process releases that row. Unlike repeatable read, cursor stability does not prevent other applications from changing rows that your application reads before your program commits or terminates.

(RR)
The *Repeatable read* option ensures that:

- Your application does not read a row that another process has changed until that process releases that row.
- Other processes do not change a row that your application reads until your application commits or terminates.

(RS)
The *read stability* option ensures that:

- Your application does not read a row that another process has changed until that process releases that row.
- Other processes do not change a row that satisfies the application's search condition until your application commits or terminates. It does allow other application processes to insert a row, or to change a row that did not originally satisfy the search condition.

If the server does not support RS, it uses RR.

(UR)
The *uncommitted read* option. Unlike repeatable read and cursor stability, does not ensure anything. With the exception of LOB data, uncommitted read avoids acquiring locks on data and allows:

- Other processes change any row your application reads during the unit of work.
- Your application read any row that another process has changed, even if the process has not committed the row.

You can use this option only with a read-only operation: SELECT, SELECT INTO, or FETCH using a read-only cursor. If you specify ISOLATION(UR) for any other operation, Db2 uses ISOLATION(CS) for that operation.

(NC)
The *no commit* option is used on packages that are bound to certain servers other than Db2 for z/OS. Db2 for z/OS does not support NC. If the server does not support this isolation level, it uses UR.

Default values for ISOLATION

Process	Default value
BIND SERVICE	CS
BIND PLAN	CS
BIND PACKAGE	• For a local server: The plan value • For a remote server: CS
REBIND PLAN	Existing value
REBIND PACKAGE	Existing value. You cannot change ISOLATION from a specified value to a default of the plan value by using REBIND PACKAGE. To do that, you must use BIND PACKAGE ACTION(REPLACE).

Catalog records for ISOLATION

See the ISOLATION column in SYSPACKAGE catalog table (Db2 SQL) and SYSPLAN catalog table (Db2 SQL).

Related tasks

Choosing an ISOLATION option (Db2 Performance)

KEEPDYNAMIC bind option

The KEEPDYNAMIC option determines whether Db2 keeps dynamic SQL statements after the point of commit or rollback..

Command option	Option values	Used with
KEEPDYNAMIC	(NO) (YES)	• BIND PACKAGE • BIND PLAN • REBIND PACKAGE "1" on page 129 • REBIND PLAN

Note:

1. The KEEPDYNAMIC bind option is not valid for REBIND of packages for native SQL procedures, native REST services, advanced triggers.

(NO)

db2z_bindoptisolation

Specifies that Db2 does not keep dynamic SQL statements after the point of commit or rollback.

(YES)
Specifies that Db2 keeps dynamic SQL statements after the point of commit or rollback.

If you specify both KEEPDYNAMIC(NO) and RELEASE(DEALLOCATE), some dynamic SQL statements that reference declared temporary tables are held across commit points. See the description of the RELEASE(DEALLOCATE) option for more information.

If you specify KEEPDYNAMIC(YES), the application does not need to prepare an SQL statement after every commit or rollback point, Db2 keeps the dynamic SQL statement until one of the following events occurs:

- The application process ends.
- The application executes an explicit PREPARE statement with the same statement identifier.

If you specify KEEPDYNAMIC(YES), and the dynamic statement cache is active, Db2 keeps a copy of the prepared statement in the dynamic statement cache. If the dynamic statement cache is not active, Db2 keeps only the SQL statement string past the point of commit or rollback. Db2 then implicitly prepares the SQL statement if the application executes an OPEN, EXECUTE, or DESCRIBE operation for that statement.

If you specify KEEPDYNAMIC(YES), DDF server threads that are used to execute KEEPDYNAMIC(YES) packages will remain active. Active DDF server threads are subject to idle thread timeouts.

If you specify KEEPDYNAMIC(YES), you must not specify REOPT(ALWAYS). KEEPDYNAMIC(YES) and REOPT(ALWAYS) are mutually exclusive. However, you can use KEEPDYNAMIC(YES) with REOPT(ONCE).

Performance hint: KEEPDYNAMIC(YES) results in improved performance if your DRDA client application uses a cursor defined WITH HOLD. Db2 automatically closes a held cursor when there are no more rows to retrieve, which eliminates an extra network message.

Default values for KEEPDYNAMIC

Process	Default value
BIND PLAN	NO
BIND PACKAGE	NO
REBIND PLAN	Existing value
REBIND PACKAGE	Existing value

Catalog records for KEEPDYNAMIC

See the KEEPDYNAMIC column in SYSPACKAGE catalog table (Db2 SQL) and SYSPLAN catalog table (Db2 SQL).

Related concepts

Methods for keeping prepared statements after the point of commit or rollback (Db2 Performance)

Related tasks

Enabling KEEPDYNAMIC refresh for DBATs (Db2 Performance)

Improving dynamic SQL performance (Db2 Performance)

Related reference

MAX KEPT DYN STMTS field (MAXKEEPD subsystem parameter) (Db2 Installation and Migration)

RELEASE bind option

The RELEASE option determines when to release resources that a program uses, either at each commit point or when the program terminates.

LIBRARY bind option

The LIBRARY option determines what partitioned data set or zFS file path to search for the DBRM that is listed in the MEMBER option.

Command option	Option values	Used with
LIBRARY	(*dbrm-library-name*)	• BIND PACKAGE

dbrm-library-name must be cataloged.

When *dbrm-library-name* is not delimited, it identifies a partitioned data set, and *dbrm-member-name* identifies the data set member. The partitioned data set name can be delimited by single quotation marks

(‘), and this is the recommended format. When a data set name is not delimited by single quotation marks, Db2 prefixes it with the user name or a default user name.

When *dbrm-library-name* is delimited with double quotation marks ("), it identifies the absolute path of a zFS file, and *dbrm-member-name* identifies the zFS file. *dbrm-library-name* can contain mixed-case characters. For example, the following command binds a package from a DBRM file with absolute path name /u/mylib1/myMem1:

```
BIND PACKAGE (MYCOLL1) MEMBER("myMem1") LIBRARY("/u/mylib1")
```

Default values for LIBRARY

Process	Default value
BIND PACKAGE	Search only the libraries described by the DBRMLIB DD statement

Related concepts

Bind options for locks (Db2 Performance)

Related tasks

BIND options for distributed applications (Db2 Performance)

Related reference

CURRENT OPTIMIZATION HINT special register (Db2 SQL)

Bind options for remote access (Db2 Application programming and SQL)

MEMBER bind option

The MEMBER option determines what database request modules (DBRMs) to include in the package.

Command option	Option values	Used with
MEMBER	*dbrm-member-name*	• BIND PACKAGE

The MEMBER option is deprecated for BIND PLAN. Use it only when you cannot run BIND PACKAGE to bind DBRMs into packages explicitly. When you specify MEMBER, Db2 binds the DBRMs into packages, and includes those packages in a package list for the specified plan.

Option descriptions for MEMBER

(*dbrm-member-name*)

Specifies the name of a partitioned data set member or zFS file that contains a DBRM.

When the LIBRARY parameter is also specified, and *dbrm-library-name* is not delimited, LIBRARY identifies a partitioned data set, and *dbrm-member-name* identifies the data set member.

When the LIBRARY parameter is also specified, and *dbrm-library-name* is delimited with double quotation marks ("), LIBRARY identifies the absolute path of a zFS file, and *dbrm-member-name* identifies the zFS file. When *dbrm-member-name* is delimited with double quotation marks, it can contain mixed-case characters. For example, the following command binds a package from a DBRM file with absolute path name /u/mylib1/myMem1:

```
BIND PACKAGE (MYCOLL1) MEMBER("myMem1") LIBRARY("/u/mylib1")
```

Names beginning with DSN are reserved; you receive a warning message if *dbrm-member-name* begins with DSN.

dbrm-member-name becomes the package name.

For BIND PACKAGE, you can use only one member. If you do not use MEMBER, you must use COPY. You cannot use both options.

Default values for MEMBER

Process	Default value
BIND PLAN	N/A
BIND PACKAGE	None
REBIND PLAN	N/A
REBIND PACKAGE	N/A

Catalog records for MEMBER

See the NAME columns in SYSPACKAGE catalog table (Db2 SQL) and SYSPACKLIST catalog table (Db2 SQL)T.

NAME bind option

The NAME bind option specifies the name of the Db2 REST service to be bound or freed. The name is also used for the Db2 package that is associated with the REST service.

Command option	Option values	Used with
NAME	(*service-name*)	• BIND SERVICE

Option descriptions for NAME

(*service-name*)

The name of the REST service to be bound. There is no default. The *service-name* can be an undelimited or a delimited identifier. The delimiter for *service-name* is double quotation marks (").
If *service-name* is delimited, Db2 does not convert the value to uppercase.

If the *service-name* value for a REST service is a delimited identifier, it can include these characters:

```
A–Z
a–z
0–9
_ @ # $ -
```

Default values for NAME

Process	Default value
BIND SERVICE	N/A

Related tasks

Creating a Db2 REST service (Db2 REST services)

Related reference

BIND SERVICE subcommand (DSN)
The BIND SERVICE (DSN) subcommand builds an application package that represents a Db2 REST service. Db2 records the description of the service in the catalog tables and saves the prepared package in the directory.

FREE SERVICE command (DSN)
The FREE SERVICE (DSN) subcommand deletes an application package that represents a Db2 REST service. The command also removes the corresponding entry from the catalog tables.

BIND and REBIND options for packages, plans, and services

There are several options you can use for binding or rebinding packages, plans, and services. Some of the options are common for both BIND and REBIND operations.

OPTHINT bind option

The OPTHINT option controls whether access paths that are specified in PLAN_TABLE instances are used for static SQL statements.

Command option	Option values	Used with
OPTHINT	(' *hint-id* ')	• BIND PACKAGE • BIND PLAN • BIND SERVICE • REBIND PACKAGE "1" on page 133 • REBIND PLAN

Note:

1. The OPTHINT bind option is not valid for REBIND of packages for native SQL procedures, native REST services, or advanced triggers.

The OPTHINT option also sets the default value for special register CURRENT OPTIMIZATION HINT, which provides optimization hints for dynamic SQL.

(' *hint-id* ')
A character string of up to 128 characters in length. The value is used during query optimization to identify PLAN_TABLE rows that specify the use a of a specific access path. The delimiters can only be single quotation marks (').

If ' *hint-id* ' contains all blank characters, Db2 does not use optimization hints for static SQL statements.

Db2 uses optimization hints only when optimization hints are enabled for your system. To enable optimization hints, specify YES for the value of the OPTHINTS subsystem parameter.

Restriction: The PACKAGE does not inherit from the PLAN.

Default values for OPTHINT

Process	Default value
BIND SERVICE	All blanks, use normal optimization
BIND PLAN	All blanks, use normal optimization
BIND PACKAGE	All blanks, use normal optimization
REBIND PLAN	Existing value
REBIND PACKAGE	Existing value

Catalog records for OPTHINT

See the OPTHINT column in SYSPACKAGE catalog table (Db2 SQL) and SYSPLAN catalog table (Db2 SQL).

Related tasks
Specifying access paths in a PLAN_TABLE instance (Db2 Performance)
Related reference
OPTIMIZATION HINTS field (OPTHINTS subsystem parameter) (Db2 Installation and Migration)
CURRENT OPTIMIZATION HINT special register (Db2 SQL)
SYSPACKAGE catalog table (Db2 SQL)

OWNER bind option

The OWNER option determines the authorization ID of the owner of a plan, package, or service.

Command option	Option values	Used with
OWNER	(*authorization-id*)	• BIND PACKAGE • BIND PLAN • BIND SERVICE • REBIND PACKAGE "1" on page 134 • REBIND PLAN

Note:

1. The OWNER bind option is not valid for REBIND of packages for functions, native SQL procedures, or advanced triggers.

Option descriptions for OWNER

(*authorization-id*)

Specifies an authorization ID to own the plan, package, or service.

The owner must have the privileges required to execute the SQL statements contained in the object.

If ownership changes, all grants for privileges on the object that the previous owner issued change to name the new owner as the grantor. The new owner has the privileges BIND and EXECUTE on the object and grants them to the previous owner.

You can bind or rebind only the objects for which the authorization ID has bind privileges. If you do not specify an authorization ID, the process rebinds only the objects for which the primary ID has bind privileges.

Notes

Interactions with the PLANMGMT option: If you plan to change this option and the PLANMGMT option in a REBIND command, see "PLANMGMT bind option" on page 140 for the implications.

OWNER for BIND and REBIND in trusted context:

When BIND and REBIND commands are issued in a trusted context that has the ROLE AS OBJECT OWNER clause, the owner is determined as follows:

- If the OWNER option is not specified, the role associated with the binder becomes the owner.
- If the OWNER option is specified, the role specified in the OWNER option becomes the owner. In a trusted context, the OWNER specified must be a role. For the bind to succeed, the binder needs BINDAGENT privilege from the role specified in the OWNER option. The binder also receives BINDAGENT privilege, if the role associated with the binder has BINDAGENT privilege.

If the ROLE AS OBJECT OWNER clause is not in effect for the trusted context, then the current rules for BIND and REBIND ownership apply. If a role is associated in a trusted context, then the role privileges are included in the binder's privilege set to determine if the binder is allowed to perform the bind.

For remote BIND or REBIND PACKAGE only:

The value of OWNER is subject to translation when sent to the remote system.

Default values for OWNER

Process	Default value
BIND SERVICE	Primary authorization ID of the agent that runs the bind process
BIND PLAN	Primary authorization ID of the agent that runs the bind process
BIND PACKAGE	Primary authorization ID of the agent that runs the bind process
REBIND PLAN	Existing value
REBIND PACKAGE	Existing value

Catalog records for OWNER

See the OWNER column in SYSPACKAGE catalog table (Db2 SQL), the GRANTOR column in SYSPACKAUTH catalog table (Db2 SQL), and the CREATOR column in SYSPLAN catalog table (Db2 SQL).

PACKAGE bind options

The *location-name*, *collection-id*, *package-id*, and *version-id* values specify the packages to bind or rebind.

Command option	Option values	Used with
PACKAGE	(*location-name.collection-id*) (BIND PACKAGE) ((*location-name.collection-id.package-id.*(*version-id*)) (REBIND PACKAGE)	• BIND PACKAGE • REBIND PACKAGE

You cannot use the BIND PACKAGE subcommand to:

- Bind a package with the same name as an existing trigger package
- Copy a trigger package

Descriptions for BIND PACKAGE

The following options identify the package to bind. You can identify the location and collection ID. The DBRM supplies the package ID and version ID if you use the MEMBER option. See "MEMBER bind option" on page 131. Otherwise, these IDs come from the COPY option. See "COPY bind option" on page 97

location-name

The location of the DBMS where the package binds and where the description of the package resides. The location name must be defined in catalog table SYSIBM.LOCATIONS. If that table does not exist or if the DBMS is not in it, you receive an error message. See LOCATIONS catalog table (Db2 SQL).

The default is the local DBMS.

collection-id

Specifies the collection to contain the package to bind. There is no default value.

collection-id can be an undelimited or delimited identifier. The delimiter for *collection-id* is double quotation marks ("). If *collection-id* is delimited, Db2 does not convert the value to uppercase.

Other options for BIND PACKAGE

For descriptions of the other options in the syntax diagram, see Chapter 14, "BIND and REBIND options for packages, plans, and services ," on page 81.

Descriptions for REBIND PACKAGE

The following options identify the packages to rebind by specifying the location, collection, package name, and version. You must identify a package name, and you can also supply a version ID.

location-name

The location of the DBMS where the package rebinds and where the description of the package resides. The location name must be defined in the SYSIBM.LOCATIONS catalog table. If that table does not exist or if the DBMS is not in it, you receive an error message. See LOCATIONS catalog table (Db2 SQL).

The default is the local DBMS.

***collection-id* or ***

Specifies the collection to contain the package to bind, or that already contains the package to rebind. There is no default.

You can use an asterisk (*) to rebind all local packages with the specified *package-id* in all the collections for which you have bind privileges.

package-id or *

Specifies the name of the package to rebind, as listed in column NAME of catalog table SYSPACKAGE. There is no default. You can use an asterisk (*) to rebind all local packages in *collection-id* for which you have bind privileges.

The *package-id* value can be an undelimited or delimited identifier. The delimiter for package-id is double quotation marks ("). If *package-id* is delimited, Db2 does not convert the value to uppercase.

***version-id* or ***

Specifies the version of the package to rebind, as listed in column VERSION of catalog table SYSPACKAGE.

You can use an asterisk (*) to rebind all local versions of the specified *package-id* in *collection-id* for which you have bind privileges.

Using only `()` rebinds the version of the package that is identified by the empty string.

If you omit *version-id* , the default depends on the how you specify *package-id* . If you use * for *package-id* , then *version-id* defaults to *. If you explicitly provide a value for *package-id* , then *version-id* defaults to the empty string version.

***

Rebinds all local Db2 packages for which the applicable authorization ID has the BIND privilege. Specifying `(*)` is the same as specifying the package name as `(*.*.(*))` or `(*.*)`. The applicable authorization ID is:

- The value of OWNER, if you use that option
- The primary authorization ID of the process running the bind, if you do not use the option OWNER

Other options for REBIND PACKAGE

For descriptions of the other options in the syntax diagram, see the topic Chapter 14, “BIND and REBIND options for packages, plans, and services ,” on page 81.

Catalog records for PACKAGE

See the COLLID, NAME, and VERSION columns in SYSPACKAGE catalog table (Db2 SQL).

PATH bind option

The PATH option determines the SQL path that Db2 uses to resolve unqualified stored procedure names in CALL statements, in user-defined data types, and in functions.

Command option	Option values	Used with
PATH	(*schema-name*) (USER) (*schema-name* , USER , ...)	• BIND PACKAGE • BIND PLAN • BIND SERVICE • REBIND PACKAGE "1" on page 137 • REBIND PLAN

Note:

1. The PATH bind option is not valid for REBIND of packages for native SQL procedures or advanced triggers.

For the PATH option, consider the following guidelines when you specify a *schema-name*:

- The specified schema names are *not* folded to uppercase by Db2. This behavior is different than that for schema names in SQL statements, which are folded to uppercase before being stored in the catalog. If you do not specify these nondelimited schema names in upper case, Db2 cannot find a match in the catalog for those schema names.
- You can specify delimited identifiers in both mixed and uppercase characters.

The PATH keyword is mutually exclusive with the PATHDEFAULT keyword. Do not specify both keywords in the same REBIND command.

(*schema-name*)
Identifies a schema.

(*schema-name* , ...)
Identifies a list of schemas. The same schema name should not appear more than once in the SQL path.

The number of schemas that you can specify is limited by the length of the resulting SQL path, which cannot exceed 2048 bytes. To calculate the length of the resulting SQL path:

1. Take the length of each schema.
2. Add 2 for delimiters around each *schema-name* in the list.
3. Add 1 for each comma after each schema. Do **not** add 1 for the last schema.

(USER)
Represents a maximum 128-byte *schema-name* . At bind time, Db2 includes this 128-byte length in the total length of the list of schema names specified for the PATH bind option. The maximum length for a list of schema names, including comma separators, delimiters, and the 128-byte USER value, is 2048 bytes. If you exceed this limit, Db2 generates an error message at bind time.

At run time, Db2 substitutes the run time value of the USER special register, which contains the primary authorization ID of the run time process, for the *schema-name* in the position of USER in the PATH *schema-name* list.

If you specify USER in a list of schema names, do not use delimiters around the USER keyword.

Db2 does not validate that the specified schema actually exists at precompile or at bind time.

You do not need to explicitly specify the SYSIBM, SYSFUN, SYSPROC, and SYSIBMADM schemas; Db2 implicitly assumes that these schemas are at the beginning of the SQL path. Db2 adds these schemas in the order listed. If you do not specify the SYSIBM, SYSFUN, and SYSPROC schemas, they are not included in the 2048-byte length.

SYSPUBLIC must not be specified for *schema-name*.

Interactions with the PLANMGMT option: If you plan to change this option and the PLANMGMT option in a REBIND command, see "PLANMGMT bind option" on page 140 for the implications.

Default values for PATH

Process	Default value
BIND SERVICE	SYSIBM, SYSFUN, SYSPROC, SYSIBMADM, *service-qualifier*
BIND PLAN	SYSIBM, SYSFUN, SYSPROC, SYSIBMADM, *plan-qualifier*
BIND PACKAGE	SYSIBM, SYSFUN, SYSPROC, SYSIBMADM, *package-qualifier*
REBIND PLAN	Existing value
REBIND PACKAGE	Existing value

Catalog records for PATH

See the PATHSCHEMAS column in SYSPACKAGE catalog table (Db2 SQL).

The default values for BIND PLAN and BIND PACKAGE are not stored in the catalog. The default values in the catalog are a zero-length string.

Db2 for z/OS accepts FUNCPATH as a synonym for PATH when FUNCPATH is received from a remote requester. However, FUNCPATH cannot be specified on a BIND or REBIND command.

PATHDEFAULT bind option

The PATHDEFAULT option resets the PATH value for a package or plan to SYSIBM, SYSFUN, SYSPROC, SYSIBMADM, *plan-or-package-qualifier*.

Command option	Option values	Used with
PATHDEFAULT	N/A	• REBIND PACKAGE[1] "1" on page 138 • REBIND PLAN

Note:

1. The PATHDEFAULT bind option is not valid for REBIND of packages for native SQL procedures or advanced triggers.

PKLIST and NOPKLIST bind options

The PKLIST option determines the packages to include in a package list. The NOPKLIST option deletes packages from a package list.

Command option	Option values	Used with
PKLIST NOPKLIST	(*location-name.collection-id.package-id* , ...) PKLIST only	• BIND PLAN • REBIND PLAN

For PKLIST, the order in which you list packages with partial identifiers determines the search order at run time and can affect performance.

NOPKLIST is used with REBIND PLAN only. NOPKLIST determines that the plan is rebound without a package list. If a package list already exists, NOPKLIST deletes it.

If you specify REBIND PLAN for a plan that was bound prior to DB2 10 and includes DBRMs, Db2 binds those existing DBRMs in the plan into packages. In this case, the PKLIST and NOPKLIST options have the following effects:

- If you specify PKLIST, the resulting plan includes both the newly created DBRM packages and the packages in the specified package list. The DBRM packages are included at the front of the newly created package list.
- If you specify NOPKLIST, any existing package lists are removed from the plan. NOPKLIST does not delete the package list that is created by binding the existing DBRMs into packages. However, if you use NOPKLIST a second time on the same plan that only contains package lists, all package lists are deleted.

(*location-name*) or (*)
Names the location of the DBMS where the package resides, or defers that choice until run time. Use either a particular location name or an asterisk (*), or omit this part of the identifier. The default is the local DBMS.

- If you use a particular location name, then that DBMS should be defined in catalog table SYSIBM.LOCATIONS. If that table does not exist or if the DBMS is not in it, you receive warning messages.
- If you use an asterisk, at run time the location comes from the special register CURRENT SERVER. Db2 checks privileges to use the SQL statements in the package at that location.

(*collection-id*) or (*)
Names the collection that contains the package or defers that choice until run time. Use either a particular collection ID or an asterisk (*). No default exists.

If you use an asterisk, then Db2 checks the privileges to use the SQL statements that are embedded in the package at run time. At that time also, Db2 determines the collection ID as follows:

- If the value in the special register CURRENT PACKAGESET is not blank, then that value is the collection ID.
- If the value of CURRENT PACKAGESET is blank, Db2 skips the entry unless it is the last entry in the package list. If it is the last or only entry, an error message is issued.

(*package-id*) or (*)
Names a particular package or specifies, by the asterisk, all packages in the collection. Because you cannot specify a *version-id* for the packages included in the package list, all versions are effectively included.

Default values for PKLIST

Process	Default value
BIND PLAN	None. You must specify PKLIST.
BIND PACKAGE	N/A
REBIND PLAN	Existing value
REBIND PACKAGE	N/A

Catalog records for PKLIST and NOPKLIST

See SYSPACKLIST catalog table (Db2 SQL).

PLAN bind options

These *plan-name* value specifies the plan or plans to bind or rebind.

Command option	Option values	Used with
PLAN	(*plan-name*) (*) "1" on page 140	• BIND PLAN • REBIND PLAN

Note:

1. The PLAN(*) option is valid only for REBIND PLAN.

Descriptions for BIND PLAN

(*plan-name*)

Specifies the name of the application plan.

The Db2 catalog record for the *plan-name* value is the NAME column in SYSPLAN catalog table (Db2 SQL).

Other options for BIND PLAN

For descriptions of the other options in the syntax diagram, see Chapter 14, "BIND and REBIND options for packages, plans, and services ," on page 81.

Descriptions for REBIND PLAN

(*plan-name*)
Specifies the name of the application plan to rebind, as stored in the NAME column in SYSPLAN catalog table (Db2 SQL).

(*)
Rebinds all plans for which the applicable authorization ID has the BIND privilege. The applicable authorization ID is:

- The value of OWNER, if you specify it. See "OWNER bind option" on page 134.
- The authorization ID of the process running the bind, if you specify the OWNER option.

Other options for REBIND PLAN

For descriptions of the options shown in the syntax diagram, see the topic Chapter 14, "BIND and REBIND options for packages, plans, and services ," on page 81.

Catalog record for PLAN

See the NAME column in SYSPLAN catalog table (Db2 SQL).

PLANMGMT bind option

The PLANMGMT option retains, during a rebind operation, all relevant package information (such as metadata, query text, dependencies, authorizations, and access paths) in catalog tables and in the directory.

Command option	Option values	Used with
PLANMGMT	(EXTENDED) (BASIC) (OFF)	• REBIND PACKAGE • REBIND TRIGGER PACKAGE

If performance regression occurs, you can direct Db2 to fall back to the older copy of a package. Over time, a package can have multiple copies that exist on disk storage, but only one of those copies is the active or current copy. All other copies are inactive.

Option descriptions for PLANMGMT

([EXTENDED])

Discard the previous copy of a package. The current copy becomes the previous copy, and the original copy is managed as follows:

- If no original copy exists, the current copy is cloned to become the original.
- If an original copy exists, it is retained as the original.

In each case, the incoming copy of a package becomes the new current copy.

If the PLANMGMT option is specified explicitly and you change any of the following options, Db2 issues an error message:

- OWNER
- QUALIFIER
- ENABLE
- DISABLE
- PATH
- PATHDEFAULT
- IMMEDWRITE
- BUSTIMESENSITIVE
- SYSTIMESENSITIVE
- ARCHIVESENSITIVE

([BASIC])

Discard the previous copy of a package. The current copy becomes the previous copy, and the incoming copy becomes the current copy. If an original copy of a package exists, it remains available.

If the PLANMGMT option is specified explicitly and you change any of the following options, Db2 issues an error message:

- OWNER
- QUALIFIER
- ENABLE
- DISABLE
- PATH
- PATHDEFAULT
- IMMEDWRITE
- BUSTIMESENSITIVE
- SYSTIMESENSITIVE
- ARCHIVESENSITIVE

([OFF])

If none of the following options are changed, the current access path is removed and replaced with the incoming copy, and any previous or original copies are unaffected.

- OWNER
- QUALIFIER
- ENABLE
- DISABLE

- PATH
- PATHDEFAULT
- IMMEDWRITE
- BUSTIMESENSITIVE
- SYSTIMESENSITIVE
- ARCHIVESENSITIVE

If any of the previously listed options are changed, all package copies (current, previous, and original) are purged.

Note: If the PLANMGMT setting is inherited from the value of the PLANMGMT subsystem parameter and the value of one of the previously listed options changes, Db2 internally turns off the PLANMGMT option. As a result, Db2 purges the prior copies of a package. However, if one of the previously listed options is specified but the value does not change, Db2 processes the command as if the option were not specified. If none of the previously listed options has a change in value, an error message is not issued, and the PLANMGMT option is not turned off.

Pattern-matching characters

PLANMGMT settings remain valid when pattern-matching characters (*) are used in the REBIND syntax. When you use REBIND PACKAGE to rebind more than one package, Db2 retains previous and original copies for each package separately.

Defaults for PLANMGMT

Process	Default value
BIND PLAN	N/A
BIND PACKAGE	N/A
REBIND PLAN	N/A
REBIND PACKAGE	PLANMGMT subsystem parameter value
REBIND TRIGGER PACKAGE	PLANMGMT subsystem parameter value

Catalog records for PLANMGMT

The PLANMGMT column value is blank in the SYSIBM.SYSPACKAGE row for a new package that was created from a BIND PACKAGE command.

If the package is created by a CREATE statement for a native SQL routine, the PLANMGMT column value in the SYSIBM.SYSPACKAGE row is the value of the PLANMGMT subsystem parameter.

See the PLANMGMT columns in SYSPACKAGE catalog table (Db2 SQL) and SYSPACKCOPY catalog table (Db2 SQL).

Related tasks

Saving and switching to previous access paths (Db2 Performance)

Related reference

PLAN MANAGEMENT field (PLANMGMT subsystem parameter) (Db2 Installation and Migration)

SYSPACKAGE catalog table (Db2 SQL)

SYSPACKCOPY catalog table (Db2 SQL)

PROGAUTH bind option

The PROGAUTH option specifies whether Db2 performs program authorization checking to determine whether Db2 can execute a plan.

Command option	Option values	Used with
PROGAUTH	(DISABLE) (ENABLE)	• BIND PLAN • REBIND PLAN

(DISABLE)
Specifies that program authorization checking is not performed.

(ENABLE)
Specifies that program authorization checking is performed. That checking performs the following functions:

- Determines whether a program and plan combination is authorized to run.

If ENABLE is specified, a row must exist in table SYSIBM.DSNPROGAUTH for the plan that is specified in the BIND PLAN or REBIND PLAN statement. That row must also contain the name of a program that runs the plan. If the row is not correctly specified, Db2 returns a resource unavailable message when the program runs.

Default values for PROGAUTH

Process	Default value
BIND PLAN	DISABLE
BIND PACKAGE	N/A
REBIND PLAN	Existing value
REBIND PACKAGE	N/A

Catalog records for PROGAUTH

See the PROGAUTH column in SYSPLAN catalog table (Db2 SQL).

Related tasks
Managing program authorization (Managing Security)
Related reference
SYSIBM.DSNPROGAUTH table (Db2 SQL)

QUALIFIER bind option

The QUALIFIER option determines the implicit qualifier for unqualified names of tables, views, indexes, and aliases contained in the plan or package.

Command option	Option values	Used with
QUALIFIER	*qualifier-name*	• BIND PACKAGE • BIND PLAN • BIND SERVICE • REBIND PACKAGE "1" on page 144 • REBIND PLAN

Note:

1. The QUALIFIER bind option is not valid for REBIND of packages for native SQL procedures or advanced triggers.

Option descriptions for QUALIFIER

(*qualifier-name*)
Specifies the value of the implicit qualifier. This value is not subject to translation when sent to a remote system for BIND or REBIND PACKAGE.

Interactions with the PLANMGMT option: If you plan to change this option and the PLANMGMT option in a REBIND command, see "PLANMGMT bind option" on page 140 for the implications.

Default values for QUALIFIER

Process	Default value
BIND SERVICE	Authorization ID of the service owner
BIND PLAN	Authorization ID of the plan owner
BIND PACKAGE	Authorization ID of the package owner
REBIND PLAN	Existing value
REBIND PACKAGE	Existing value

Catalog records for QUALIFIER

See the QUALIFIER column in SYSPACKAGE catalog table (Db2 SQL) and SYSPLAN catalog table (Db2 SQL).

QUERYACCELERATION bind option

The QUERYACCELERATION bind option specifies whether a static SQL query is bound for acceleration, and if so, with what behavior. If the bind option is specified, it also provides the initial value for the CURRENT QUERY ACCELERATION special register that is used for dynamic queries, if a SET statement has not been issued for the special register.

When a package that is bound with this bind option runs, the QUERYACCELERATION value, instead of the QUERY_ACCELERATION subsystem parameter, provides the initial value for the CURRENT QUERY ACCELERATION special register. The CURRENT QUERY ACCELERATION special register specifies the acceleration behavior for dynamic SQL queries. Therefore, by rebinding the application package with the QUERYACCELERATION bind option, you can also accelerate dynamic SQL queries in an application. You can specify this bind option instead of either modifying the application to add an explicit SET CURRENT QUERY ACCELERATION statement or setting the QUERY_ACCELERATION subsystem parameter. For dynamic SQL queries in a package, the bind option value that you specify overrides the QUERY_ACCELERATION subsystem parameter. This bind option does not have a default value, so if you do not specify this bind option, the QUERY_ACCELERATION subsystem parameter initializes the special register.

Restriction: The QUERYACCELERATION bind option applies only to cursor queries, the SELECT portion of the SQL INSERT from SELECT statement, and static SQL SELECT INTO statements that are run locally. If a static SQL SELECT INTO statement is bound for acceleration but run remotely, Db2 fails the statement at run time and returns a negative SQL code.

Command option	Option values	Used with
QUERYACCELERATION	(NONE) (ENABLE) (ENABLEWITHFAILBACK)	• BIND PACKAGE • REBIND PACKAGE "1" on page 145

Command option	Option values	Used with
	(ELIGIBLE) (ALL)	

Note:

1. The QUERYACCELERATION bind option is not valid for REBIND of packages for native SQL procedures or advanced triggers.

Option descriptions for QUERYACCELERATION

(NONE)
Specifies that no static SQL query in the application is bound for acceleration or will be accelerated when the application is run.

(ENABLE)
Specifies that a static SQL query is bound for acceleration if it satisfies the acceleration criteria, including the cost and heuristics criteria. The query is routed to an accelerator when the application runs. Otherwise, if the static query does not satisfy the acceleration criteria, the query is bound for execution in Db2.

If an error condition, such as one of the following examples, occurs while executing the accelerated static query when the application is run, Db2 fails the static query and returns a negative SQL code to the application:

- A failure occurs while running the static query on the accelerator.
- The accelerator returns an error for the query.
- The accelerator is not started and Db2 cannot route the static query to the accelerator for execution.

(ENABLEWITHFAILBACK)
Results in the same behavior as ENABLE, except if one of the error conditions occurs on the first OPEN of the accelerated static query when the application is run. In this case, instead of failing the static query and returning a negative SQL code to the application, Db2 performs a temporary *statement-level* incremental bind of the query and runs the query in Db2. The application does not see the acceleration failure. Failback to Db2 is not possible after the application does a successful OPEN for the query on the accelerator.

Restriction: FL 504 If the query contains a passthrough-only expression, Db2 returns an error and does not accelerate the query, even if a matching user-defined function exists. For more information about passthrough-only expressions, see Accelerating queries with passthrough-only expressions.

(ELIGIBLE)
Specifies that a static SQL query is bound for acceleration if the query meets the basic acceleration criteria, regardless of the cost or heuristics criteria. The query is routed to the accelerator when the application runs.

Like the behavior for ENABLE, if an error condition occurs while executing the accelerated static query when the application is run, Db2 fails the static query and returns a negative SQL code to the application.

(ALL)
Specifies that all of the static SQL queries in the application are to be bound for acceleration and routed to the accelerator when the application runs. If Db2 determines that a static query cannot be bound to run on the accelerator and the query references a user base table or view, the BIND or REBIND PACKAGE operation fails with an error message for that query. (A failure exception is made for declared global temporary tables (DGTTs) and created global temporary tables and (CGTTs) because these tables cannot be accelerated.)

Like the behavior for ENABLE, if an error condition occurs while executing the accelerated static query when the application is run, Db2 fails the static query and returns a negative SQL code to the application.

The Db2 catalog table SYSIBM.SYSPACKSTMT has a STATUS column value of `'0'` for static SQL queries that have been bound for acceleration. For cursor-based static queries, the DECLARE CURSOR, OPEN, FETCH, and CLOSE statements each have a SYSPACKSTMT.STATUS column value of `'0'`. For a static INSERT from SELECT statement, where the SELECT has been bound for acceleration, the SYSPACKSTMT.STATUS column value is also `'0'`.

Default values for QUERYACCELERATION

Process	Default value
BIND PACKAGE	None
REBIND PACKAGE	None

There is no default value for this bind option. The QUERYACCELERATION bind option does not inherit the setting from the QUERY_ACCELERATION subsystem parameter.

Related concepts

How Db2 determines whether to accelerate eligible queries (Db2 Performance)

Related tasks

Enabling acceleration of SQL queries (Db2 Performance)

Enabling Db2 for IBM Db2 Analytics Accelerator for z/OS (Db2 Performance)

QUERYID bind option

The QUERYID option frees entries in the SYSIBM.SYSQUERY table, and the SYSIBM.SYSQUERYPLAN table or the SYSIBM.SYSQUERYOPTS table.

Command option	Option values	Used with
QUERYID	(*number*) (ALL)	• Chapter 45, “FREE QUERY subcommand (DSN),” on page 361

Option descriptions for QUERYID

(*number*)

Frees an entry in the SYSIBM.SYSQUERY table that has the same QUERYID value, and the corresponding entries in the SYSIBM.SYSQUERYPLAN table or the SYSIBM.SYSQUERYOPTS table.

(ALL)

Frees all the entries from the SYSIBM.SYSQUERY table and the corresponding entries from the SYSIBM.SYSQUERYPLAN table or the SYSIBM.SYSQUERYOPTS table.

RELEASE bind option

The RELEASE option determines when to release resources that a program uses, either at each commit point or when the program terminates.

Command option	Option values	Used with
RELEASE	(COMMIT) (DEALLOCATE) (INHERITFROMPLAN) “1” on page 147	• BIND PACKAGE • BIND PLAN • REBIND PACKAGE “2” on page 147 • REBIND PLAN • REBIND TRIGGER PACKAGE

Note:

1. The `RELEASE(INHERITFROMPLAN)` option is not valid for REBIND of packages for native REST services.
2. The RELEASE bind option is not valid for REBIND of packages for native SQL procedures or advanced triggers.

Partition locks follow the same rules as table space locks, and all partitions are held for the same duration. Thus, if one package is using RELEASE(COMMIT) and another is using RELEASE(DEALLOCATE), all partitions use RELEASE(DEALLOCATE).

The RELEASE option does not affect page, row, LOB, or XML locks.

Option descriptions for RELEASE

(COMMIT)

Releases resources at each commit point, unless cursors are held. If the application accesses the object again, it must acquire the lock again.

- All tables and table spaces are unlocked when:

  TSO, Batch, and CAF

  An SQL COMMIT or ROLLBACK statement is issued, or your application process terminates.

  IMS

  A CHKP or SYNC call (for single-mode transactions), a GU call to the I/O PCB, or a ROLL or ROLB call is completed.

  CICS

  A SYNCPOINT command is issued.

  Exception:

  If the cursor is defined WITH HOLD, table or table space locks necessary to maintain cursor position are held past the commit point.

- Table, partition, or table space locks are released at the next commit point unless the cursor is defined WITH HOLD.
- The least restrictive lock needed to execute each SQL statement is used except when a more restrictive lock remains from a previous statement. In that case, that lock is used without change.

(DEALLOCATE)

Releases resources only when the thread terminates.

However, Db2 can release resources to allow processes to break in when they require access to packages and the catalog:

Break-in for active threads

If the PKGREL_COMMIT subsystem parameter setting is the default value YES, Db2 threads release active packages at COMMIT or ROLLBACK if certain operations are waiting for exclusive access to the package. The following operations can proceed at COMMIT or ROLLBACK while a persistent thread is active on a package:

- BIND PACKAGE with REPLACE and REBIND PACKAGE requests, including automatic rebind for online schema changes (DDL statements) for tables and indexes that are statically referenced by the package
- Online REORG operations that materialize pending definition changes for objects that are statically referenced by the package

Break-in for idle threads

If a package lock is likely to time out, Db2 recycles any idle threads that use local attachment facilities, such as CICS, IMS, or RRSAF. A thread is eligible for recycling if it is has these characteristics:

- Is at a transaction boundary

- Is not running in Db2
- Has not committed or rolled back recently

When you specify RELEASE(DEALLOCATE), some static and dynamic statements that reference declared temporary tables are also kept as prepared across commit points unless the table was defined with the ON COMMIT DROP TABLE option. These statements that are kept as prepared across commit points are INSERT, UPDATE, DELETE, MERGE, and SELECT INTO statements. The statement is not kept across the commit point if one of the following conditions is true:

- The declared global temporary table is defined with the ON COMMIT DROP TABLE option.
- The statement also references a Db2 base object (for example, a table or view), and one of the following statements is true:
  - The base object reference is for a Db2 catalog table.
  - At the commit point, Db2 determines that another Db2 thread is waiting for an X-lock on the base object's database descriptor (DBD).
  - The statement references an XML function or operation, and at the commit point Db2 determines that the base object DBD S-lock for the XML operation must be released.
  - At the commit point, Db2 determines that a base object DBD S-lock that is used by the statement must be released and cannot be maintained across the commit point.
- Db2 determines that another Db2 thread is waiting for an X-lock on the Db2 package that contains the statement.

RELEASE(DEALLOCATE) has no effect on most dynamic SQL statements, which use RELEASE(COMMIT), except in the following cases:

- When you use RELEASE(DEALLOCATE) and KEEPDYNAMIC(YES), and your subsystem is installed with the CACHEDYN subsystem parameter set to YES, the RELEASE(DEALLOCATE) option is honored for dynamic SELECT, INSERT, UPDATE, and DELETE statements.
- When you use RELEASE(DEALLOCATE), prepared INSERT, UPDATE, DELETE, and MERGE dynamic statements that reference declared temporary tables are kept past commit points unless the table was defined with the ON COMMIT DROP TABLE option.

If a lock is to be held past commit and it is an S, SIX, or X lock on a table space or a table in a segmented table space, Db2 sometimes demotes that lock to an intent lock (IX or IS) at commit. Db2 demotes a gross lock if it was acquired for one of the following reasons:

- Db2 acquired the gross lock because of lock escalation.
- The application issued a mass delete (DELETE FROM *object* without a WHERE clause or TRUNCATE).

Packages that are executed on a Db2 server through a DRDA connection with a client system apply the RELEASE(DEALLOCATE) bind option. However, if the MODIFY DDF PKGREL(COMMIT) command is issued at a Db2 server, the RELEASE(DEALLOCATE) option has no effect on packages that are executed on that server through a DRDA connection with a client system.

Locks that are acquired for dynamic statements are held until one of the following events occurs:

- The application process ends (deallocation).
- The application issues a PREPARE statement with the same statement identifier. (Locks are released at the next commit point.)
- The statement is removed from the cache because it has not been used. (Locks are released at the next commit point.)
- An object that the statement is dependent on is dropped or altered, or a privilege that the statement needs is revoked. (Locks are released at the next commit point.)

RELEASE(DEALLOCATE) can increase the package or plan size, because more items become resident in the package or plan.

INHERITFROMPLAN

Enables a local package to inherit the value of the RELEASE option from the plan, regardless of whether the package was bound remotely or locally.

If you bind a package remotely with the RELEASE(INHERITFROMPLAN) option and the remote server does not understand the INHERITFROMPLAN value, the server might return an error.

The RELEASE(INHERITFROMPLAN) value is not applied in the following situations, because no associated plan exists:

- If you bind the application locally, and then copy the package to a remote server.
- If you bind an application that uses RRSAF.
- For any packages that are created for utilities.

In these cases, RELEASE(COMMIT) is in effect for the package.

Defaults for RELEASE

Process	Default value
BIND SERVICE	COMMIT
BIND PLAN	COMMIT
BIND PACKAGE	• For a local server: Plan value • For a remote server: COMMIT
REBIND PLAN	Existing value
REBIND PACKAGE	Existing value
REBIND TRIGGER PACKAGE	Existing value

Catalog records for RELEASE

See the RELEASE column in SYSPACKAGE catalog table (Db2 SQL) and SYSPLAN catalog table (Db2 SQL).

Related tasks

Choosing a RELEASE option (Db2 Performance)

Related reference

KEEPDYNAMIC bind option

The KEEPDYNAMIC option determines whether Db2 keeps dynamic SQL statements after the point of commit or rollback..

PACKAGE RELEASE COMMIT field (PKGREL_COMMIT subsystem parameter) (Db2 Installation and Migration)

REOPT bind option

The REOPT option specifies whether Db2 determines an access path at run time by using the values of host variables, parameter markers, and special registers.

Command option	Option values	Used with
REOPT	(NONE) (ALWAYS) (ONCE) (AUTO)	• BIND PACKAGE • BIND PLAN • BIND SERVICE • REBIND PACKAGE “1” on page 150 • REBIND PLAN

Note:

1. The REOPT bind option is not valid for REBIND of packages for native SQL procedures or advanced triggers.

For dynamic statements, the REOPT bind option also controls whether Db2 considers the literal values for access path selection when CONCENTRATE STATEMENTS WITH LITERALS is specified when statements are prepared. The literal values are considered only when REOPT(ONCE) or REOPT(AUTO) is specified.

(NONE)
Does not determine an access path at run time. You can use NOREOPT(VARS) as a synonym for REOPT(NONE).

(ALWAYS)
Determines the access path again at run time each time the statement is run. Db2 determines access paths at both bind time and run time for statements that contain one or more of the following variables:

- Host variables
- Parameter markers
- Special registers

At run time, Db2 uses the values in those variables to determine the access paths. You can use REOPT(VARS) as a synonym for REOPT(ALWAYS).

(ONCE)
Determines the access path for any dynamic statement only once, at the first run time or at the first time the statement is opened. This access path is used until the prepared statement is invalidated or removed from the dynamic statement cache and needs to be prepared again.

(AUTO)
Autonomically determines if a new access path needs to be generated to further optimize the performance for each execution. Db2 determines the access path at the first run time and then at each subsequent execution, Db2 evaluates whether a new access path is needed. If so, Db2 generates a new access path and uses that access path until another new access path is generated. For cached dynamic statements that reference parameter markers, a new path can be generated at any execution. The new path is based on changes to estimated filter factors for predicates that result from changes to parameter marker values.

Usage notes:

If you specify the bind option REOPT(ALWAYS), REOPT(AUTO), or REOPT(ONCE), Db2 sets the bind option DEFER(PREPARE) automatically. However, when you specify REOPT(ONCE), Db2 determines the access path for a statement only once (at the first run time).

You cannot use REOPT(ALWAYS) with the KEEPDYNAMIC(YES) option.

The following restrictions apply to REOPT(ONCE):

- REOPT(ONCE) is ignored if you use it with static SQL statements because Db2 for z/OS caches only dynamic statements.
- If a dynamic statement in a plan or package that is bound with REOPT(ONCE) runs when dynamic statement caching is turned off, the statement runs as if REOPT(ONCE) is not specified.
- You **cannot** use both REOPT(ONCE) and NODEFER(PREPARE).
- You **can** use both REOPT(ONCE) and KEEPDYNAMIC(YES).

Default values for REOPT

Process	Default value
BIND SERVICE	NONE
BIND PLAN	NONE

Process	Default value
BIND PACKAGE	NONE
REBIND PLAN	Existing value
REBIND PACKAGE	Existing value

Catalogs record for REOPT

See the REOPTVAR columns in SYSPACKAGE catalog table (Db2 SQL) and SYSPLAN catalog table (Db2 SQL) .

Related concepts

Differences between static and dynamic SQL (Db2 Application programming and SQL)

Related tasks

Reoptimizing SQL statements at run time (Db2 Performance)

Related reference

SYSPLAN catalog table (Db2 SQL)

SYSPACKAGE catalog table (Db2 SQL)

RESTSERVICEDEFAULT bind option

The RESTSERVICEDEFAULT bind option determines whether the specified REST service package version identified by the PACKAGE option will be modified to be the default service version for the service.

This option can only be used when rebinding a local REST service package and is invalid when used for any other package type.

Command option	Option values	Used with
RESTSERVICEDEFAULT	(YES)	• REBIND PACKAGE "1" on page 151

Note:

1. The RESTSERVICEDEFAULT bind option is only valid for REBIND of packages for native REST services.

Option descriptions for RESTSERVICEDEFAULT

(YES)

Specifies that the REST service package version identified by the PACKAGE option will be modified to become the active REST service default service version. This option value can only be used when rebinding a versioned REST service package on the local Db2system. The REST service package being rebound, as specified by the PACKAGE bind option, must specify a valid, non-empty string *version-id*. Additionally, the RESTSERVICEDEFAULT option can only be used to modify a REST service package on the local Db2 subsystem. If a *location-name* is specified in the PACKAGE bind option, the *location-name* must be the location name of the local Db2 system. If the RESTSERVICEDEFAULT bind option is specified and the package being rebound is not a local, versioned REST service package, Db2 will issue an error message.

Usage notes:

The RESTSERVICEDEFAULT option is not allowed when using an asterisk (*) wildcarding for any portion of the package name values used in the PACKAGE option.

There is no validation of the REST service compatibility when changing the default service versioning. The Db2 REST service versioning support allows each version of a REST service to be created using a different SQL statement with different input and output parameters and different bind options. This means that your REST client applications may require code changes to be compatible with a new default version of a REST service. Db2does not check or validate REST service version compatibility when changing the

default service version. It is recommended that you compare the JSON request and response schemas between the current and new default REST service version to determine if there are any incompatible differences before changing the default service version of a REST service. The REST service discover API can be used to obtain the REST service JSON request and response schemas for review. You should also review any REST client applications that are useing the default service version URI (/services/*<collection id>*/*<service name>*) to ensure that they are compatible before changing the default service version of a REST service.

Examples:

Rebind the existing local REST service package MyServices.createCustomer.(v2) to be the default service version for the MyServices.createCustomer REST service.

```
REBIND PACKAGE("MyServices"."createCustomer".(v2)) RESTSERVICEDEFAULT (YES)
```

Rebind the existing local REST service package payroll.getEmployee.(v3), which is located at the local location STLEC1, to be the default service version for the payroll.getEmployee REST service.

```
REBIND PACKAGE(STLEC1."payroll"."getEmployee".(v3)) RESTSERVICEDEFAULT (YES)
```

Default values for RESTSERVICEDEFAULT

Process	Default value
REBIND Package	None (No change to the REST service default service version)

Catalog records for RESTSERVICEDEFAULT

See the ISDEFAULT column in Db2 REST services table (SYSIBM.DSNSERVICE) (Db2-supplied user tables).

ROUNDING bind option

The ROUNDING option specifies the rounding mode at bind time. Use rounding mode to manipulate DECFLOAT data.

Command option	Option values	Used with
ROUNDING	(HALFUP) (CEILING) (DOWN) (FLOOR) (HALFDOWN) (HALFEVEN) (UP)	• BIND PACKAGE • BIND PLAN • BIND SERVICE • REBIND PACKAGE "1" on page 152 • REBIND PLAN

Note:

1. The ROUNDING bind option is not valid for REBIND of packages for advanced triggers.

(HALFUP)

Round to nearest; if equidistant, round up. If the discarded digits represent greater than or equal to half (0.5) of the value of a one in the next left position then the result coefficient should be incremented by 1 (rounded up). Otherwise, the discarded digits are ignored.

HALFUP is the default option.

(CEILING)
Round toward +infinity. If all of the discarded digits are zero or if the sign is negative the result is unchanged other than the removal of discarded digits. Otherwise, the result coefficient should be incremented by 1 (round up).

(DOWN)
Round toward 0 (TRUNCATION). The discarded digits are ignored.

(FLOOR)
Round toward -infinity. If all of the discarded digits are zero or if the sign is positive the result is unchanged other than the removal of discarded digits. Otherwise, the sign is negative and the result coefficient should be incremented by 1.

(HALFDOWN)
Round to the nearest; if equidistant, round down. If the discarded digits represent greater than half (0.5) of the value of a one in the next left position then the result coefficient should be incremented by 1 (rounded up). Otherwise, (the discarded digits are 0.5) or less) the discarded digits are ignored.

(HALFEVEN)
Round to the nearest; if equidistant, round so that the final digit is even. If the discarded digits represent greater than half (0.5) the value of a one in the next left position then the result coefficient should be incremented by 1 (rounded up). If they represent less than half, then the result coefficient is not adjusted (that is, the discarded digits are ignored). Otherwise, (they represent exactly half) the result coefficient is unaltered if its rightmost digit is even, or incremented by 1 (rounded up) if its rightmost digit is odd (to make an even digit).

(UP)
Round away from 0. If all the discarded digits are zero the result is unchanged other than they removal of discarded digits. Otherwise, the result coefficient should be incremented by 1 (rounded up).

The default value of ROUNDING option is DEF DECFLOAT ROUNDING MODE from application defaults load module.

Default values for ROUNDING

Process	Default value
BIND SERVICE	HALFEVEN
BIND PLAN	HALFEVEN
BIND PACKAGE	HALFEVEN
REBIND PLAN	Existing value
REBIND PACKAGE	Existing value

Catalog records for ROUNDING

See the ROUNDING column in SYSPACKAGE catalog table (Db2 SQL) and SYSPLAN catalog table (Db2 SQL), and column ROUNDING_MODE of table SYSENVIRONMENT.

SQLDDNAME bind option

The SQLDDNAME bind option specifies the name of a JCL DD statement. The DD statement specifies the file or data set that contains a single SQL statement to be included in a Db2 REST service.

Command option	Option values	Used with
SQLDDNAME	(*ddname*)	• BIND SERVICE

Option descriptions for SQLDDNAME

(*ddname*)

The name of a JCL DD statement. The DD statement specifies the file or data set that contains a single SQL statement to be included in a REST service. If the SQLDDNAME parameter is not provided, DSNSTMT is used as the default name.

The JCL for the BIND SERVICE subcommand must provide a valid DD specification for *ddname*. The DSNAME parameter of the DD specification must be either a valid DSORG=PS data set or a member-qualified library, such as `library.name(member)`. If the SQL statement text is provided via a zFS or UNIX file, the PATH parameter, which is mutually exclusive with the DSNAME parameter, must specify a fully qualified name to the zFS or UNIX file.

Db2 opens and reads the data set or file referenced by the DD specification for input only. The maximum amount of data read is 2097152 bytes. The organization of the data set or file must be sequential. Db2 also checks the data set or file to determine if it has a valid record format (RECFM). A valid RECFM is F (fixed-length records, unblocked), FB (fixed-length records, blocked), V (variable-length records, unblocked), or VB (variable-length records, blocked).

zFS or UNIX files are normally not defined with RECFM. Make sure that you specify RECFM=VB in the DD statement when it refers to a zFS or UNIX file as shown in the following example:

```
//DSNSTMT DD PATH='/file_path',
// PATHOPTS=ORDONLY,
// RECFM=VB,LRECL=32756,BLKSIZE=32760
```

If the DD specification refers to a temporary data set created within the job, make sure that you specify the DCB parameter with all the options, including RECFM, as in DCB=(RECFM=[V|VB|F|FB],LRECL=*nnnnn*,BLKSIZE=*mmmmm*).

Default values for SQLDDNAME

Process	Default value
BIND SERVICE	DSNSTMT

Related tasks

Creating a Db2 REST service (Db2 REST services)

Related reference

BIND SERVICE subcommand (DSN)

The BIND SERVICE (DSN) subcommand builds an application package that represents a Db2 REST service. Db2 records the description of the service in the catalog tables and saves the prepared package in the directory.

FREE SERVICE command (DSN)

The FREE SERVICE (DSN) subcommand deletes an application package that represents a Db2 REST service. The command also removes the corresponding entry from the catalog tables.

BIND and REBIND options for packages, plans, and services

There are several options you can use for binding or rebinding packages, plans, and services. Some of the options are common for both BIND and REBIND operations.

SQLENCODING bind option

The SQLENCODING bind option specifies the encoding of the SQL statement coded in different system formats and located by SQLDDNAME(*ddname*).

Command option	Option values	Used with
SQLENCODING	(EBCDIC)	• BIND SERVICE

Command option	Option values	Used with
	(ASCII) (UNICODE) (*ccsid*)	

Default values for SQLENCODING

Process	Default value
BIND SERVICE	EBCDIC

Related tasks

Creating a Db2 REST service (Db2 REST services)

Related reference

BIND SERVICE subcommand (DSN)

The BIND SERVICE (DSN) subcommand builds an application package that represents a Db2 REST service. Db2 records the description of the service in the catalog tables and saves the prepared package in the directory.

FREE SERVICE command (DSN)

The FREE SERVICE (DSN) subcommand deletes an application package that represents a Db2 REST service. The command also removes the corresponding entry from the catalog tables.

BIND and REBIND options for packages, plans, and services

There are several options you can use for binding or rebinding packages, plans, and services. Some of the options are common for both BIND and REBIND operations.

SQLERROR bind option

The SQLERROR option determines whether to create a package if SQL errors occur.

Command option	Option values	Used with
SQLERROR	(NOPACKAGE) (CONTINUE) (CHECK)	• BIND PACKAGE • Chapter 13, "BIND SERVICE subcommand (DSN)," on page 75 "1" on page 155

Note:

1. Only the SQLERROR(NOPACKAGE) option is valid for BIND SERVICE commands.

(NOPACKAGE)
Creates no package if an error occurs.

(CONTINUE)
Creates a package, even if errors occur when binding SQL statements. The statements in error cannot execute. Any attempt to execute them at run time causes errors.

(CHECK)
Performs all syntax and semantic checks on the SQL statements being bound when the authorization ID for BIND does not have the privilege to execute the statements. A package is not created as part of this process. If an existing package with the same name and version is encountered during bind processing, the existing package is not dropped or replaced, even if ACTION(REPLACE) was specified.

Default values for SQLERROR

Process	Default value
BIND PLAN	N/A
BIND PACKAGE	NOPACKAGE
BIND SERVICE	NOPACKAGE
REBIND PLAN	N/A
REBIND PACKAGE	N/A. Because you cannot use the option SQLERROR for REBIND PACKAGE, the value for the previous package remains in effect when you rebind that package. If you rebind a package that uses SQLERROR(CONTINUE), SQL statements that were in error at BIND time are not rebound.

Catalog records for SQLERROR

See the SQLERROR column in SYSPACKAGE catalog table (Db2 SQL).

SQLRULES bind option

The SQLRULES option determines whether you can execute a type 2 CONNECT statement to an existing SQL connection, according to Db2 rules.

Command option	Option values	Used with
SQLRULES	( ) (STD)	• BIND PLAN • REBIND PLAN

Alternatively, the statement causes an error, according to the ANSI/ISO SQL standard of 1992. This option applies to any application process that uses the plan and executes type 2 CONNECT statements. It has no effect on type 1 CONNECT statements.

Option descriptions for SQLRULES

( )
No error occurs if CONNECT identifies an existing SQL connection. If *X* is an existing SQL connection, CONNECT TO *X* makes *X* the current connection. If X is already the current connection, CONNECT TO *X* has no effect on the state of any connections.

(STD)
An error occurs if CONNECT identifies an existing SQL connection. Therefore, if *X* is a dormant SQL connection, you must use the SQL statement SET CONNECTION to make *X* the current connection.

For local operations, the value of SQLRULES is used for the initial value of the SQL special register CURRENT RULES.

Default values for SQLRULES

Process	Default value
BIND PLAN	DB2
BIND PACKAGE	N/A
REBIND PLAN	Existing value
REBIND PACKAGE	N/A

Catalog records for SQLRULES

See the SQLRULES column in SYSPLAN catalog table (Db2 SQL).

Related reference

CURRENT RULES special register (Db2 SQL)

SET CURRENT RULES statement (Db2 SQL)

STRDEL bind option

The STRDEL bind option designates whether an apostrophe (') or double quotation marks (") is used as the string delimiter within SQL statements. If a value is not specified, Db2 uses the value specified in the SQL STRING DELIMITER field on panel DSNTIPF.

Command option	Option values	Used with
STRDEL	(APOSTROPHE) (QUOTE)	• BIND SERVICE

Option values for STRDEL

(APOSTROPHE)
Use an apostrophe (') as the string delimiter.

(QUOTE)
Use double quotation marks (") as the string delimiter.

Default values for STRDEL

Process	Default value
BIND SERVICE	The value specified in the SQL STRING DELIMITER field of the DSNTIPF subsystem parameter

Related tasks

Creating a Db2 REST service (Db2 REST services)

Related reference

BIND SERVICE subcommand (DSN)
The BIND SERVICE (DSN) subcommand builds an application package that represents a Db2 REST service. Db2 records the description of the service in the catalog tables and saves the prepared package in the directory.

FREE SERVICE command (DSN)
The FREE SERVICE (DSN) subcommand deletes an application package that represents a Db2 REST service. The command also removes the corresponding entry from the catalog tables.

BIND and REBIND options for packages, plans, and services
There are several options you can use for binding or rebinding packages, plans, and services. Some of the options are common for both BIND and REBIND operations.

SWITCH bind option

The SWITCH option causes the previous copy or original copy of a package to become the current copy of the package.

Command option	Option values	Used with
SWITCH	[PREVIOUS] ORIGINAL	• REBIND PACKAGE "1" on page 158

Command option	Option values	Used with
		• REBIND TRIGGER PACKAGE

Note:

1. The SWITCH bind option is not valid for REBIND of packages for native REST services.

This option allows you to revert to an older copy of a package in the event of a performance regression. You cannot specify SWITCH with any other rebind options. If the package that you specify does not have the previous or original copy to switch to, Db2 issues an error message, and continues processing the rest of the list. Use this option with the pattern-matching character (*) in the syntax.

If the target package copy is not valid or it was bound in DB2 10 or an earlier release, the command fails and Db2 issues an error message.

([PREVIOUS])
Switches between the current and previous copies of a package or a plan. The current copy takes the place of the previous copy, and the previous copy takes the place of the current copy.

(ORIGINAL)
Moves the current copy to take the place of the previous copy. Any previous copy that exists is purged. The original copy is cloned to take the place of the current copy.

Default values for SWITCH

Process	Default value
BIND PLAN	N/A
BIND PACKAGE	N/A
REBIND PLAN	N/A
REBIND PACKAGE	Existing value
REBIND TRIGGER PACKAGE	Existing value

Related concepts
Package copies for plan management (Db2 Performance)
Related tasks
Saving and switching to previous access paths (Db2 Performance)
Related information
DSNT330I (Db2 Messages)

SYSTIMESENSITIVE bind option

The SYSTIMESENSITIVE option specifies whether references to system-period temporal tables in both static and dynamic SQL statements are affected by the value of the CURRENT TEMPORAL SYSTEM_TIME special register.

Command option	Option values	Used with
SYSTIMESENSITIVE	(YES) (NO)	• BIND PACKAGE • BIND PLAN • BIND SERVICE • REBIND PACKAGE “1” on page 159 • REBIND PLAN

Command option	Option values	Used with
		• REBIND TRIGGER PACKAGE

Note:

1. The SYSTIMESENSITIVE bind option is not valid for REBIND of packages for complied SQL functions, native SQL procedures, or advanced triggers.

Option descriptions for SYSTIMESENSITIVE

(YES)
References to system-period temporal tables are affected by the value of the CURRENT TEMPORAL SYSTEM_TIME special register.

(NO)
References to system-period temporal tables are not affected by the value of the CURRENT TEMPORAL SYSTEM_TIME special register.

Interactions with the PLANMGMT option: If you plan to change this option and the PLANMGMT option in a REBIND command, see "PLANMGMT bind option" on page 140 for the implications.

Default values for SYSTIMESENSITIVE

Process	Default value
BIND SERVICE	YES
BIND PLAN	N/A
BIND PACKAGE	YES
REBIND PLAN	N/A
REBIND PACKAGE	Existing value
REBIND TRIGGER PACKAGE	Existing value

Related reference
CURRENT TEMPORAL SYSTEM_TIME special register (Db2 SQL)

TIME bind option

The TIME bind option specifies the format of time output that Db2 returns. If a value is not specified, Db2 uses the value specified in the TIME FORMAT field on panel DSNTIP4.

Command option	Option values	Used with
TIME	(EUR) (ISO)) (JIS)) (LOCAL)) (USA)	• BIND SERVICE

Option descriptions for TIME

(EUR))
Use the time format of the IBM standard for Europe.

(ISO)
Use the time format of the International Standards Organization.

(JIS)
Use the time format of the Japanese Industrial Standard.

(LOCAL)
Use the same time format as specified for the ISO value

(USA)
Use the time format of the IBM standard for the United States of America.

Default values for TIME

Process	Default value
BIND SERVICE	The value specified in the TIME FORMAT field of the DSNTIP4 subsystem parameter

Related tasks

Creating a Db2 REST service (Db2 REST services)

Related reference

BIND SERVICE subcommand (DSN)
The BIND SERVICE (DSN) subcommand builds an application package that represents a Db2 REST service. Db2 records the description of the service in the catalog tables and saves the prepared package in the directory.

FREE SERVICE command (DSN)
The FREE SERVICE (DSN) subcommand deletes an application package that represents a Db2 REST service. The command also removes the corresponding entry from the catalog tables.

BIND and REBIND options for packages, plans, and services
There are several options you can use for binding or rebinding packages, plans, and services. Some of the options are common for both BIND and REBIND operations.

VALIDATE bind option

The VALIDATE option determines whether to recheck, at run time, errors of the types "OBJECT NOT FOUND" and "NOT AUTHORIZED" that are found during bind or rebind.

Command option	Option values	Used with
VALIDATE	(RUN) (BIND)	• BIND PACKAGE • BIND PLAN • BIND SERVICE • REBIND PACKAGE "1" on page 160 • REBIND PLAN

Note:

1. The bind option is not valid for REBIND of packages for native SQL procedures or advanced triggers.

The option has no effect if all objects and needed privileges exist.

Option descriptions for VALIDATE

(RUN)
Indicates that if not all objects or privileges exist at bind time, the process issues warning messages, but the bind succeeds. Db2 checks existence and authorization again at run time for SQL statements that failed those checks during bind. The checks use the authorization ID of the plan or package owner.

If you specify the VALIDATE(RUN) bind option, and the application to be bound contains an error with a SET host-variable assignment statement, the bind process still issues only warning messages, not error messages.

(BIND)

Indicates that if not all objects or needed privileges exist at bind time, the process issues error messages, and does not bind or rebind the plan or package, with the following exceptions:

- *For BIND PACKAGE only*, if you use the option SQLERROR(CONTINUE), the bind succeeds, but the SQL statements in it that have errors cannot execute.
- Db2 might not resolve names for certain object types that are referenced in CREATE, ALTER, or DROP statements until execution time. That is, the bind process does not always detect an undefined name for a distinct type, function, JAR, mask, permission, procedure, role, sequence, sequence alias, trigger, trusted context, or variable.
- Db2 does not check authorization for the LOCK TABLE statement and some CREATE, ALTER, and DROP statements until run time.

Default values for VALIDATE

Process	Default value
BIND SERVICE	RUN
BIND PLAN	RUN
BIND PACKAGE	RUN
REBIND PLAN	Existing value
REBIND PACKAGE	Existing value

Catalog records for VALIDATE

See the VALIDATE columns in SYSPACKAGE catalog table (Db2 SQL) and SYSPLAN catalog table (Db2 SQL).

VERSION bind option

The VERSION bind option defines the version identifier of the Db2 REST service. The VERSION bind option is only valid after REST service versioning support has been enabled.

Command option	Option values	Used with
VERSION	(*version-id*)	• BIND SERVICE

Option descriptions for VERSION

(*version-id*)

Defines the version identifier of the Db2 REST service. A version identifier is an SQL identifier of up to 64 characters, each of which is an uppercase letter, lowercase letter, numerals (0-9), the underscore (_) character, the dash (-) character, the period (.) character, the at sign (@) character, the pound sign (#) character, or the dollar sign ($) character.

If you do not specify a version, the default version identifier used is determined based on whether REST service versioning support has been enabled or not. If REST service versioning support has been enabled, then "V1" is used as the default, otherwise, the empty string is used.

Default values for VERSION

Process	Default value
BIND SERVICE	V1 if REST service versioning is enabled, otherwise, empty string.

Chapter 15. Specification of Db2 for z/OS bind options from IBM Data Server clients and drivers

When you bind packages on Db2 for z/OS data servers from IBM Data Server clients and drivers, you need to specify bind options that are supported by Db2 for z/OS but not by Db2 for Linux®, UNIX, and Windows as generic bind options.

You can use the following IBM Data Server client and driver interfaces to specify Db2 for z/OS-only bind options:

- For Java™ clients, when you use IBM Data Server Driver for JDBC and SQLJ utility DB2Binder or method `DB2Binder.runJDBCBinder` to bind IBM Data Server Driver for JDBC and SQLJ packages or rebind user packages, specify the Db2 for z/OS bind options as sub-options of the -bindOptions parameter. For example:

```
java com.ibm.db2.jcc.DB2Binder -url jdbc:db2://srv1.svl.ibm.com:446/DB1
-user myid -password mypass -action replace
-bindOptions "IMMEDWRITE YES"
```

- For non-Java clients, when you use CLI method `SQLCreatePkg` to bind packages, specify the Db2 for z/OS bind options as sub-options of the GENERIC option in the *szBindOpts* string. For example:

```
strcpy (bindFileName, "/u/user1/sqllib/bnd/@all.lst");
cliRC = SQLCreatePkg(hdbc,
                     bindFileName,
                     strlen(bindFileName),
                     "GENERIC=IMMEDWRITE NO"
                     -3, // SQL_NTS);
```

You can specify the following Db2 for z/OS bind options as generic bind options:

- APCOMPARE
- APRETAINDUP
- APREUSE
- APPLCOMPAT
- ARCHIVESENSITIVE
- BUSTIMESENSITIVE
- CONCURRENTACCESSRESOLUTION
- DBPROTOCOL
- DEFER(PREPARE) or NODEFER(PREPARE)
- EXPLAIN
- EXTENDEDINDICATOR
- IMMEDWRITE
- OPTHINT
- PATHDEFAULT (rebind only)
- PLANMGMT (rebind only)
- REOPT
- ROUNDING
- SWITCH (rebind only)
- SYSTIMESENSITIVE

© Copyright IBM Corp. 1983, 2024

Chapter 16. -CANCEL THREAD command (Db2)

The Db2 command CANCEL THREAD cancels processing for specific local or distributed threads.

Abbreviation: -CAN THD

Environment

This command can be issued from a z/OS console, a DSN session under TSO, a DB2I panel (DB2 COMMANDS), an IMS or a CICS terminal, or a program using the instrumentation facility interface (IFI).

Data sharing scope: Member

Authorization

To execute this command, if you do not specify the LOCAL option, you must use a privilege set of the process that includes one of the following authorities:

- SYSOPR authority
- SYSCTRL authority
- SYSADM authority

If you specify the LOCAL option, no authorization is needed.

Db2 commands that are issued from a logged-on z/OS console or TSO SDSF can be checked by Db2 authorization using primary and secondary authorization IDs. A logged-on z/OS user ID must be defined in RACF or a similar security server.

Syntax

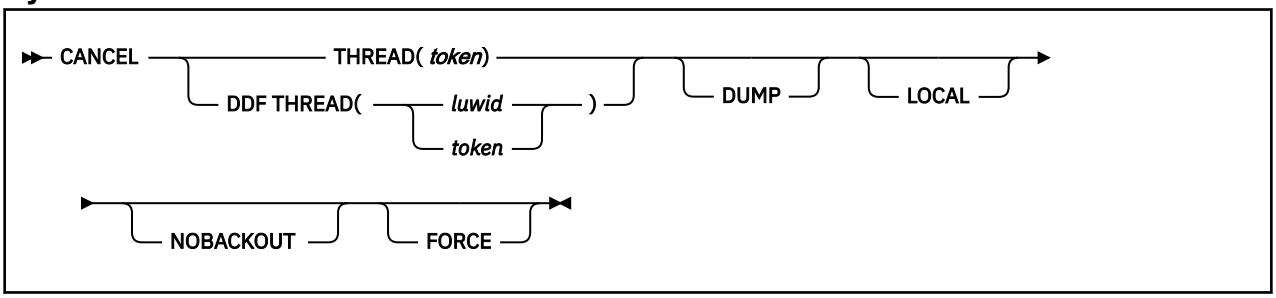

Option descriptions

THREAD (*token*)

Identifies a specific thread, either distributed or not, whose processing you want to cancel. Db2 assigns a token to each thread that is unique for that Db2 subsystem, but not necessarily unique across subsystems.

The token is a one- to six-digit decimal number. You can determine what the token is by issuing the Db2 command DISPLAY THREAD or by using an IFI READS call for IFCID 147 or 148. The token can also appear after the equal sign in Db2 messages that display an LUWID. If the token is 0, the thread of that token cannot be canceled.

DDF THREAD

Identifies distributed threads for which you want to cancel processing.

(*luwid*)

A logical unit of work identifier (LUWID), consisting of:

- A fully qualified LU network name, which consists of:

© Copyright IBM Corp. 1983, 2024

- A one- to eight-character network ID
- A period
- A one- to eight-character network LU name

- An LUW instance number, which consists of 12 hexadecimal characters that uniquely identify the unit of work

If you enter three fields separated by periods, Db2 assumes that you are entering an LUWID.

Two or more distributed threads might have the same LUWID. For example, for package-based continuous block fetch, the requester opens a secondary connection for each statement in an application. At the server, all database access threads that process work for those secondary connections have the same LUWID. All distributed threads with the same LUWID are canceled.

The LUWID can be determined from the Db2 DISPLAY THREAD command and other Db2 messages.

(*token*)
See THREAD (*token*).

DUMP
Specifies that a dump is generated when CANCEL THREAD is issued, and the thread is active in Db2. The dump can be used for diagnostic purposes.

When you cancel a thread that is not currently active in Db2, Db2 performs a hard cancel and no dump is provided. A thread is considered to be not currently active in Db2 when it has left Db2 to perform application work.

LOCAL
Specifies that Db2 search the home address space of the allied agent for a thread that matches *token*. If Db2 finds a thread, it performs a soft cancel on that thread. The LOCAL option applies only to a CANCEL THREAD command that is issued through the IFI interface. The IFI application must run in the same address space as the thread that needs to be canceled, and the thread must be connected to Db2 through the RRS attachment facility.

NOBACKOUT
Specifies that Db2 is not to attempt to back out the data during transaction rollback processing. Canceling the thread with NOBACKOUT leaves objects in an inconsistent state. Do not issue this command with NOBACKOUT unless you have a plan to resolve the data inconsistency.

Multiple NOBACKOUT requests are allowed. However, if the thread is active and the request is accepted, subsequent requests are ignored. You can choose to issue a subsequent request if a request fails (as indicated by message DSNI032I). Objects that the thread modifies are recovered (backed out). If back out processing fails, the objects are marked REFRESH PENDING (REFP) and either RECOVER PENDING (RECP) or REBUILD PENDING (RBDP or PSRBD) in the database exception table. Resolve the REFP status of the object by running the RECOVER utility to recover the object to a prior point in time or by running LOAD REPLACE on the object.

FORCE
Attempts to purge the thread of a remote connection from the Db2 server. The FORCE option is accepted only after a request to CANCEL THREAD is issued without the FORCE option.

Attention: The FORCE option can potentially affect the Db2 subsystem. Use it to cancel threads that impact the Db2 subsystem and cannot be canceled without FORCE.

The FORCE option can be used for a thread is hung in the network, but it cannot help for threads that are hung while Db2 is processing them.

Usage notes

Canceling local threads:
The CANCEL command schedules a thread to terminate. Threads that are not in Db2 terminate immediately.

Canceling Db2 threads before canceling jobs or purging transactions:
If you need to cancel or purge jobs or transactions with active Db2 threads, the best practice is to issue the Db2 CANCEL THREAD command before you cancel or purge the tasks. When the CANCEL THREAD command is issued, Db2 abnormally terminates (abends) the threads at predictable locations in Db2. This process results in orderly termination of the tasks.

Canceling threads on applications that update NOT LOGGED tables spaces
Take care when you issue a CANCEL command for an application that updates a NOT LOGGED table space. The CANCEL THREAD command can cause the NOT LOGGED table space to be placed in the LPL, so that the table space must be recovered.

Canceling distributed threads
Canceling a distributed thread can cause the thread to enter the indoubt state. Message DSNL450I is issued if the CANCEL command causes the DDF thread to be converted from active to indoubt. Db2 releases the resources that the thread holds when the indoubt state is resolved by automatic indoubt resolution with the coordinator, or by resolution with the command RECOVER INDOUBT.

If a thread that is specified in the command is part of a global transaction, the command is executed against all threads in the global transaction.

The CANCEL command schedules a thread to be terminated in Db2. To terminate, the thread must be processing within Db2. If the thread does not terminate, it could be:

- Processing outside of Db2, possibly in the application. If that is the case, the thread does not terminate until the application makes a request to Db2. Use the z/OS CANCEL command to terminate the application immediately.
- Hung up in a network operation. Use VTAM or TCP/IP commands to cause the network operation to return processing to Db2, which allows the thread to be terminated.

Canceling SNA distributed threads with VTAM Commands
If the CANCEL command does not terminate a distributed thread, it is possible that it is hung up in VTAM. Use the VTAM VARY NET,TERM command to cancel the thread's VTAM sessions.

To cancel a thread's VTAM session, you need to know the VTAM session IDs (SIDs) that correspond to the thread. Take the following steps:

1. Issue the Db2 command DISPLAY THREAD(*) LUWID(nnnn) DETAIL. (The value of *nnnn* is the token or LUWID provided by CANCEL DDF THREAD.)

   This gives you the VTAM session IDs that must be canceled. Sessions are identified by the column header SESSID as shown in the following DISPLAY THREAD output:

   ```
   -DIS THD(*) LUWID(123) DETAIL
   ```

   ```
   DSNV401I - DISPLAY THREAD REPORT FOLLOWS:
   DSNV402I - ACTIVE THREADS:
   NAME     ST A   REQ ID           AUTHID    PLAN      ASID TOKEN
   BATCH    TR *     5 BKH2C        SYSADM    BKH2      000D   123
    V444-DB2NET.LUND0.C4B23F1F4D06=123 ACCESSING DATA AT
     (  1)SAN JOSE-LUND1
    V447--INDEX SESSID           A ST TIME
    V448--(  1) 00D3590EA1E89701     S1    0923816181452
    V448--(  1) 00D3590EA1E89822   N R1    0923816181584
   DISPLAY ACTIVE REPORT COMPLETE
   DSN9022I - DSNVDT '-DIS THD' NORMAL COMPLETION
   ```

   The **N** indicates the thread is processing in VTAM.
2. Record positions 3 through 16 of SESSID for the threads to be canceled. (In the preceding DISPLAY THREAD output, the values are D3590EA1E89701 and D3590EA1E89822.)
3. Issue the VTAM command DISPLAY NET to display the VTAM session IDs. The ones you want to cancel match the SESSIDs in positions 3 through 16 and the corresponding session IDs are in bold. The following is an output example of this command:

```
D NET,ID=LUND0,SCOPE=ACT

IST097I DISPLAY ACCEPTED
IST075I NAME = LUND0, TYPE = APPL
   IST486I STATUS= ACTIV, DESIRED STATE= ACTIV
   IST171I ACTIVE SESSIONS = 0000000005, SESSION REQUESTS = 0000000000
   IST206I SESSIONS:
   IST634I NAME     STATUS           SID          SEND   RECV  VR  TP  NETID
   IST635I LUND1    ACTIV-S     D24B171032B76E65  0051   0043   0   0  NET2
   IST635I LUND1    ACTIV-S     D24B171032B32545  0051   0043   0   0  NET2
   IST635I LUND1    ACTIV-R     D2D3590EA1E89701  0022   0031   0   0  NET2
   IST635I LUND1    ACTIV-R     D2D3590EA1E89802  0022   0031   0   0  NET2
   IST635I LUND1    ACTIV-R     D2D3590EA1E89822  0022   0031   0   0  NET2
   IST314I END
```

4. Issue the VTAM command VARY NET,TERM for each of the VTAM SIDs associated with the Db2 thread. In this case, you might need to cancel only the session ID that DISPLAY THREAD shows to be processing in VTAM (D2D3590EA1E89822).

Canceling TCP/IP Distributed Threads with TCP/IP Commands

If the CANCEL command does not terminate a distributed thread, the thread might be hung up in TCP/IP. Use the TCP/IP DROP command to cancel the thread's connection ID. To do this, you need to first determine the TCP/IP connection ID that corresponds to the thread.

Depending on whether the thread is a Db2 requester or server thread, take the following steps:

- Terminating TCP/IP connection for a requester thread:

  1. Issue the Db2 command DISPLAY THREAD(*) LUWID(nnnn) DETAIL. (The value of *nnnn* is the token or LUWID provided by DISPLAY THREAD.)

     Find the IP address and local port for the connection to the partner, as shown in the following DISPLAY THREAD output:

     ```
     #display thread(*) detail

     DSNV401I  # DISPLAY THREAD REPORT FOLLOWS -
     DSNV402I  # ACTIVE THREADS -
     NAME     ST A   REQ ID           AUTHID   PLAN     ASID TOKEN
     TEST0001 TR       4 CTHDCORID001 SYSADM   DONSQL1  0027    19
      V444-USIBMSY.SYEC715B.C4B220851392=19 ACCESSING DATA AT
       (  1)-STL714A-::FFFF:9.112.114.102..446
      V447--INDEX SESSID           A ST TIME
      V448--(  1) 1028:446         N R2 0923814011448
     DISPLAY ACTIVE REPORT COMPLETE
     DSN9022I  # DSNVDT '-DIS THD' NORMAL
     COMPLETION
     ```

     In this case, the partner's IP address and port is 9.112.114.102 446, and the local port is 1028. N indicates that the thread is processing in TCP/IP.

  2. Determine the associated TCP/IP connection ID:

     ```
     d tcpip,,netstat,conn,ipaddr=9.112.114.102

     EZZ2500I NETSTAT CS V2R10 TCPIP
     USER ID  CONN     LOCAL SOCKET           FOREIGN SOCKET         STATE
     V71BDIST 0000049D 9.112.114.103..1028    9.112.114.102..446     ESTBLSH
     1 OF 1 RECORDS DISPLAYED
     ```

  3. Terminate the connection:

     ```
     v tcpip,,drop,conn=0000049d

     EZZ0060I PROCESSING COMMAND: VARY TCPIP,,DROP,
      CONN=0000049D
     EZZ0053I COMMAND VARY DROP COMPLETED
     SUCCESSFULLY
     ```

- Terminating TCP/IP connection for a server thread:

  1. Issue the Db2 command DISPLAY THREAD(*) LUWID(nnnn) DETAIL. (The value of *nnnn* is the token or LUWID provided by CANCEL THREAD.)

Find the IP address and local port for the connection to the partner, as shown in the following DISPLAY THREAD output:

```
!display thread(*) detail

DSNV401I ! DISPLAY THREAD REPORT FOLLOWS -
DSNV402I ! ACTIVE THREADS -
NAME     ST A   REQ ID           AUTHID   PLAN     ASID TOKEN
TEST0001 RA *     2 CTHDCORID001 SYSADM   DONSQL1  002D    11
 V445-USIBMSY.SYEC715B.C4B24232F81D=11 ACCESSING DATA FOR
  (  1)::FFFF:9.112.114.103
 V447--INDEX SESSID           A ST TIME
 V448--(  1) 446:1029         W R2 0923816315680
DISPLAY ACTIVE REPORT COMPLETE
DSN9022I ! DSNVDT '-DIS THD' NORMAL COMPLETION
```

In this case, the partner's IP address is 9.112.114.103 and the local port is 1029.

2. Determine the associated TCP/IP connection ID:

```
d tcpip,,netstat,conn,ipaddr=9.112.114.103

EZZ2500I NETSTAT CS V2R8 TCPIP
USER ID  CONN     LOCAL SOCKET           FOREIGN SOCKET         STATE
V61ADIST 0000048E 9.112.114.102..446     9.112.114.103..1029    ESTABLS
1 OF 1 RECORDS
DISPLAYED
```

Find the entry where the foreign socket shows the partner's IP address and port (9.112.114.103 1029) and note the CONN.

3. Terminate the connection:

```
v tcpip,,drop,conn=0000048e

EZZ0060I PROCESSING COMMAND: VARY TCPIP,,DROP,
 CONN=0000048E
EZZ0053I COMMAND VARY DROP COMPLETED SUCCESSFULLY
```

Using TCP/IP commands to cancel accelerated threads

If the CANCEL command does not terminate an accelerated thread (a thread that has active accelerator processes running), the thread might be hung up in TCP/IP. Use the TCP/IP DROP command to cancel the thread's connection ID. To do this, you need to first determine the TCP/IP connection ID that corresponds to the thread.

- To terminate a TCP/IP connection for an accelerated thread:

1. Issue the Db2 command DISPLAY THREAD(*) ACCEL(*) DETAIL.
2. Find the IP address and local port for the connection to the partner, as shown in the following DISPLAY THREAD output:

```
 )DISPLAY THREAD(*) ACCEL(*) DETAIL

 DSNV401I  ) DISPLAY THREAD REPORT FOLLOWS -
 DSNV402I  ) ACTIVE THREADS - 681
 NAME     ST A   REQ ID           AUTHID   PLAN     ASID TOKEN
 BATCH    AC *    39 ACCEL1       SYSADM   DSNTEP2  002B     3
  V666 ACC=BLINK1,ADDR=::FFFF:9.30.30.177..446:1080
  V436-PGM=DSNTEP2.DSNTEP2, SEC=1, STMNT=2256
 DISPLAY ACTIVE REPORT COMPLETE
 DSN9022I  ) DSNVDT '-DIS THD' NORMAL COMPLETION
```

In this case, the partner's IP address is 9.30.30.177, the port is 446, and the local port is 1080. AC indicates that the thread is processing in an accelerator.

3. Determine the associated TCP/IP connection ID:

```
D TCPIP,,NETSTAT,CONN,IPADDR=9.30.30.177

 EZD0101I NETSTAT CS V1R10 TCPIP
 USER ID  CONN     STATE
```

```
V91ADBM1 000009E3 ESTBLSH
  LOCAL SOCKET:   ::FFFF:9.30.222.34..1080
  FOREIGN SOCKET: ::FFFF:9.30.30.177..446
1 OF 1 RECORDS DISPLAYED
END OF THE REPORT
```

In this case, the associated TCP/IP connection ID is 000009E3.

4. Terminate the connection:

```
V TCPIP,,DROP,CONN=000009E3

EZZ0060I PROCESSING COMMAND: VARY TCPIP,,DROP,CONN=000009E3
EZZ0053I COMMAND VARY DROP COMPLETED SUCCESSFULLY
```

Examples

Example: Canceling a local thread

To cancel a non-distributed thread whose token you found through the DISPLAY THREAD command and to produce a diagnostic dump, issue:

```
-CANCEL THREAD (123) DUMP
```

Example: Canceling a distributed thread

To cancel a distributed thread whose LUWID you found through the DISPLAY THREAD command, issue:

```
-CANCEL DDF THREAD (LUDALLAS.DB2SQL1.3042512B6425)
```

Suppose that the output from -DISPLAY THREAD shows that the thread-ID and token associated with this LUWID is 45162. You can also cancel this thread by issuing either of the following commands:

```
-CANCEL DDF THREAD (45162)
```

```
-CANCEL THREAD (45162)
```

Related information

VTAM DISPLAY NET command (SNA Operation)
VTAM VARY NET,TERM command (SNA Operation)

Chapter 17. DCLGEN (declarations generator) subcommand (DSN)

The declarations generator (DCLGEN) produces an SQL DECLARE TABLE statement and a COBOL, PL/I, or C data declaration for a table or a view named in the catalog.

Environment

The declarations generator is executed by the DSN subcommand DCLGEN. That subcommand can be issued from a DSN session, running in either foreground or background mode, or it can be issued through DB2I.You can also use the SYSPROC.ADMIN_COMMAND_DSN stored procedure to submit this subcommand.

Data sharing scope: Group

Authorization

To execute this command, you must use a privilege set of the process that includes one of the following privileges or authorities:

- Ownership of the table or view
- SELECT privilege on the table or view
- DBADM authority on the database containing the table
- SYSADM authority
- SYSCTRL authority (catalog tables only)

© Copyright IBM Corp. 1983, 2024

Syntax

```
►► DCLGEN ── TABLE( ┬─ table-name ─┬ ) ┬──────────────────────────►
                    └─ view-name ──┘   └─ OWNER( owner-name ) ──┘

►┬──────────────────────────►
 └─ AT( location-name ) ──┘

►── LIBRARY( library name ┬──────────────────┬──────────────────┬ ) ──►
                          └─ (member-name ) ─┘  └─ / password ──┘

►┬──────────────────────────────────────────────────────────────────►
 │ ACTION( ┬─ ADD ─┬ ) │ │ LANGUAGE( ┬─ PLI ──┬ ) │
 │         └─ REPLACE ─┘ │           ├─ C ────┤   │
 │                       │           ├─ IBMCOB┤   │
 │                       │           └─ CPP ──┘   │

►┬──────────────────────────────────────────────────►
 │ NAMES( prefix ) │ │ STRUCTURE( structure-name ) │ │ ┬─ APOST ─┬ │
 │                 │ │                             │ │ └─ QUOTE ─┘ │

►┬──────────────────────────────────────────────────►
 │ LABEL( ┬─ NO ─┬ ) │ │ DBCSSYMBOL( ┬─ G ─┬ ) │
 │        └─ YES ─┘ │                └─ N ─┘   │

►┬──────────────────────────────────────────────────►
 │ DBCSDELIM( ┬─ YES ─┬ ) │ │ COLSUFFIX( ┬─ NO ─┬ ) │
 │            └─ NO ──┘ │                └─ YES ─┘   │

►┬──────────────────────────────────────────────────►
 │ INDVAR( ┬─ NO ─┬ ) │ │ RMARGIN( ┬─ STD ─┬ ) │
 │         └─ YES ─┘ │              └─ WIDE ─┘   │

►┬──────────────────────────────────────────────►◄
 │ DCLBIT( ┬─ NO ─┬ ) │
 │         └─ YES ─┘ │
```

Option descriptions

TABLE

Specifies the table or view for which a declaration is generated. *table-name* or *view-name* is the qualified or unqualified name of the table or view.

The name must follow these rules:

- If the name is a single-byte or mixed string and contains special characters other than underscores (_), it must be enclosed between apostrophes ('). If the language is COBOL, single-byte underscores in the name are translated into hyphens (-) by DCLGEN. Double-byte character set (DBCS) names need not be enclosed in apostrophes.
- If the name contains single-byte apostrophes, each one must be doubled (''). (Some host languages do not permit apostrophes in variable names.)

A table or view name that contains a period and is not enclosed by apostrophes is a qualified table name. The characters to the left of the period constitute the table owner, and those to the right of

the period constitute the table name. Any table name enclosed in apostrophes is an unqualified table name. To understand how DCLGEN determines the table name qualifier, see the description of the OWNER option, which follows.

OWNER(*owner-name*)
Specifies a qualifier for the table name. *owner-name* is the qualifier for the table name.

If you specify a qualified table name for the TABLE(*table-name*) option, and you also specify OWNER(*owner-name*), the qualifier portion of *table-name* supersedes *owner-name* as the table name qualifier. If you specify an unqualified table name for the TABLE(*table-name*) option, and you do not specify OWNER(*owner-name*), the SQL authorization ID is the table name qualifier.

DCLGEN supports the use of underscore (_) as a valid character in the *owner-name* keyword parameter.

The following table illustrates the decision process for determining the DCLGEN table name qualifier.

Table 9. Decision process for determining the DCLGEN table name qualifier

Table name	OWNER(*owner-name*) specified	OWNER(*owner-name*) not specified
TABLE(*table-name*) qualified	*table-name* qualifier	*table-name* qualifier
TABLE(*table-name*) unqualified	*owner-name*	SQL authorization ID

AT(*location-name*)
Identifies the location of the table or view name specified in TABLE (*table-name*). *location-name* , which can consist of 1 to 16 characters, uniquely identifies an instance of a table or view in a network.

If you specify AT, *location-name* is used as the prefix for the table name, and *table-name* or *table-view* must be a qualified name.

DCLGEN supports the use of underscore (_) as a valid character in the *location-name* keyword parameter.

LIBRARY(*library-name* (*member-name*)/ *password*)
Specifies the data set into which the declarations go. This data set must already exist and be accessible to the declarations generator. It can be either sequential or partitioned. *password* is optional.

If the library name is not enclosed within apostrophes, DCLGEN constructs the following full data set name:

```
user-prefix.library-name.language.(member-name)
```

where:

user-prefix
The user prefix of the primary authorization ID of the transaction.

language
The value of the LANGUAGE option: PLI, C, or COBOL.

(*member-name*)
Optional; if not used, the output goes to a sequential data set.

ACTION
Indicates whether to add or replace the data set.

(ADD)
Adds the data set as a new member, if it does not already exist.

The **default** is `ACTION` (ADD).

(REPLACE)
Replaces an existing member or data set with the new one. If the output is to a partitioned data set, and no member exists with the given name, one is added.

LANGUAGE
Specifies the language of the generated declaration.

Possible languages are:

- (**PLI**), for PL/I
- (**C**), for C/370
- (**IBMCOB**), for IBM COBOL
- (**CPP**), for C++

NAMES(*prefix*)
Allows field names to be formed in the declaration.

Avoid possible name conflicts between DCLGEN output and the source program. If a conflict occurs, use NAMES or STRUCTURE, or manually edit the generated declaration or source program.

prefix can contain double-byte characters.

The field names consist of *prefix* concatenated with a number from one to three digits in length. *prefix* can have up to 28 characters. If *prefix* is a single-byte or mixed string and the first character is not alphabetic, it must be enclosed in apostrophes. For example, if *prefix* is ABCDE, the field names will be ABCDE1, ABCDE2, and so on, up to a maximum of ABCDE999. Special characters can be used, but use caution to avoid possible name conflicts.

For COBOL and PL/I, if the prefix is a DBCS string, the field name will be the DBCS prefix concatenated with the DBCS representation of the number. For example, if *prefix* is <D1D2D3> (where "<" and ">" represent shift-out and shift-in characters, respectively, and D1D2D3 represent double-byte characters), generated field names will be <D1D2D3.1>, <D1D2D3.2>, and so on. The period (.) represents X'42'.

The column names in the table are taken as default names for the fields in the output.

STRUCTURE(*structure-name*)
Specifies the generated data structure.

structure-name can have up to 31 characters. If *structure-name* is a single-byte or mixed string and the first character is not alphabetic, it must be enclosed in apostrophes. You can use special characters, but use caution to avoid possible name conflicts.

structure-name can contain double-byte characters.

For SQL output, the name is the same as the table or view name. If the host language is C, the default structure name is the prefix DCL concatenated with the table name. If the host language is COBOL or PL/I and the table name is a single-byte or mixed string, the default structure name is also the prefix DCL concatenated with the table name. If the host language is COBOL or PL/I and the table name is a DBCS string, the default structure name is the prefix <.D.C.L> concatenated with the table or view name. "<" and ">" represent shift-out and shift-in characters, respectively. You must guard against possible conflicts with names in the source program. DCLGEN allows the specified structure name to be the same as the table or view name, but will issue a warning message.

APOST or QUOTE
Specifies the string delimiter character used in the host language. This option is effective only for COBOL programs.

APOST specifies the apostrophe (') as the host language string delimiter; the SQL delimiter is the quotation mark (").

QUOTE specifies the quotation mark (") as the host language delimiter; the SQL delimiter is the apostrophe (').

If neither APOST nor QUOTE is specified, the **default** is either APOST or QUOTE for COBOL, depending on what was specified on Db2 installation panel DSNTIPF.

The string delimiter delimits strings in host language statements. The SQL escape character delimits table and column names in the SQL DECLARE TABLE statement produced by DCLGEN. It is possible, by a choice made during Db2 installation, to make both delimiters the quotation mark or both the apostrophe.

LABEL
Indicates whether to include column labels in the output as comments. (Column labels can be assigned by the LABEL ON statement.)

(NO)
Omits the column labels.

(YES)
Includes the column labels.

DBCSSYMBOL
Specifies the symbol used to denote a graphic data type in a COBOL PICTURE clause.

(G)
Graphic data is denoted using G.

(N)
Graphic data is denoted using N.

DBCSDELIM
Specifies whether the DBCS table and column names in the generated DECLARE table statement will be delimited.

(YES)
DBCS table and column names will be delimited in the DCLGEN table declaration.

(NO)
DBCS table and column names will not be delimited in the DCLGEN table declaration.

COLSUFFIX
Determines whether to form field names by attaching the column name to the prefix given by the NAMES option.

(NO)
The column name is not used as a suffix, and field names are controlled by the option NAMES.

(YES)
If NAMES is specified, DCLGEN forms field names by adding column names as a suffix to the value of NAMES. For example, if the prefix given by NAMES is "NEW" and the column name is EMPNO, the field name is "NEWEMPNO".

If NAMES is **not** specified, DCLGEN issues a warning message and uses the column names as the field names.

INDVAR
Determines whether to create an indicator variable array for the host variable structure.

(NO)
DCLGEN does not create an indicator variable array.

(YES)
DCLGEN creates an indicator array for the host variable structure. The array name is the table name with a prefix of "I" (or DBCS letter "<I>" if the table name is double-byte).

RMARGIN
Specifies the break point for statement tokens that must be wrapped onto one or more subsequent records of DCLGEN output.

(STD)
Statement tokens will be wrapped after column 72.

(WIDE)
Statement tokens will be wrapped after column 80.

DCLBIT
Specifies whether to generate a DECLARE VARIABLE statement of SQL variables for columns that are defined as FOR BIT DATA. This statement is required in IBM COBOL applications that have host variables for FOR BIT DATA columns and are prepared by using the SQLCCSID option of the integrated Db2 coprocessor. The statement is also valid, but not currently required, for C/C++ and PL/I, and for COBOL that is not prepared by using the SQLCCSID option of the integrated Db2 coprocessor.

(NO)
Does not generate a DECLARE VARIABLE statement of SQL variables for columns that are defined as FOR BIT DATA.

(YES)
Generates a DECLARE VARIABLE statement of SQL variables for columns that are defined as FOR BIT DATA. If the table or view does not have any FOR BIT DATA columns, the statement is not generated.

Usage notes

TSO parsing conventions
Parsing of the DCLGEN command conforms to standard TSO parsing conventions.

The DECLARE statement
The DECLARE statement generated by DCLGEN will define all columns created with a data type of VARCHAR or LONG VARCHAR as VARCHAR. Columns created with a data type of VARGRAPHIC or LONG VARGRAPHIC will be defined as VARGRAPHIC.

Comments
The output for all host languages includes comments. The leading comment block echoes the DCLGEN subcommand that requested the declarations. The trailing comment block indicates the number of variables declared.

Using the output
To include the DCLGEN output in an application program, use the SQL INCLUDE statement. The same member name specified in the DCLGEN LIBRARY parameter is specified on the INCLUDE statement.

Prompts
Online TSO will prompt for missing or incorrectly specified options.

Editing the output

You can edit the output to add WITH DEFAULT to NOT NULL for columns that do not allow null values. If you edit the output, you must provide a default value.

If your column names contain embedded blanks, they will also be reflected in the host variable declarations, and you will have to remove, or translate, any blank characters to some other value.

For a column with an XML data type, DCLGEN generates the following output: SQL TYPE IS XML AS CLOB(1M). The default length value for the XML host variable is 1MB. You can manually update the DCLGEN output if you want a larger or smaller size.

C language support
DCLGEN support of the C language is unique in the following ways:

- DCLGEN does not fold the STRUCTURE, NAMES, or TABLE values to uppercase.
- For any Db2 column that has the data type CHAR(*n*), where *n* > 1, DCLGEN generates the corresponding host variable as CHAR(*n* + 1) to avoid the Db2 warning. For *n* = 1, the corresponding host variable is CHAR.

COBOL and binary integers

Db2 uses the full size of binary integers. It can place larger values than allowed in the specified number of digits in a COBOL variable, which can result in truncated values. To avoid this problem, you can modify the DCLGEN output to declare COBOL variables that correspond to binary integer columns with USAGE COMP-5 instead of USAGE COMP or USAGE BINARY.

COBOL and the underscore character

DCLGEN translates any underscore characters in the table's column names into hyphens (-) for use in the generated structure.

COBOL and DBCS

Although Db2 accepts values outside of the range from X'41' to X'FE', in COBOL data definition statements, both bytes of each double-byte character in data names must be within this range. Data names must also contain at least one DBCS character that does not have X'42' as its first byte.

Data declarations for arrays of indicator variables

If DCLGEN creates an array of indicator variables, data declarations have the following form: *n* is the number of columns in the table.

Language	Data declaration
C	short int I*table-name*[*n*];
COBOL	01 I*table-name* PIC S9(4) USAGE COMP OCCURS *n* TIMES
PL/I	DCL I*table-name*(*n*) BIN FIXED (15);

Trace information for data sharing members

When this command with group scope is issued in a Db2 data sharing member, it also runs on all other active members. IFICID 090 trace records for other group members can show that the same command was issued by the SYSOPR authorization ID from the 016.TLPKN5F correlation ID, in addition to the trace records from the member where the original command was issued. See Command scope in Db2 data sharing (Db2 Data Sharing Planning and Administration).

Examples

Example: Using DCLGEN to generate PL/I host variable declarations for columns in a Db2 table

The following subcommand generates PL/I declarations for table VEMPL and writes them to data set member *prefix* .SRCLIB.DATA(DSN8MPEM). The host structure and field names are generated from the table and column names.

```
DCLGEN TABLE(VEMPL) -
       LIBRARY('
prefix
.SRCLIB.DATA(DSN8MPEM)') -
       LANGUAGE(PLI) -
       APOST
```

The output looks like this:

```
/*********************************************************************/
/* DCLGEN TABLE(VEMPL) -                                             */
/*        LIBRARY('
prefix
.SRCLIB.DATA(DSN8MPEM)') -                  */
/*        LANGUAGE(PLI) -                                            */
/*        APOST                                                      */
/* ... IS THE DCLGEN COMMAND THAT MADE THE FOLLOWING STATEMENTS      */
/*********************************************************************/
EXEC SQL DECLARE VEMPL TABLE
          ( EMPNO                          CHAR(6) NOT NULL,
            FIRSTNME                       VARCHAR(12) NOT NULL,
            MIDINIT                        CHAR(1) NOT NULL,
            LASTNAME                       VARCHAR(15) NOT NULL,
            WORKDEPT                       CHAR(3) NOT NULL
          ) ;
```

```
/*********************************************************************/
/* PLI DECLARATION FOR TABLE VEMPL                                   */
/*********************************************************************/
DCL 1 DCLVEMPL,
     5 EMPNO    CHAR(6),
     5 FIRSTNME CHAR(12) VAR,
     5 MIDINIT  CHAR(1),
     5 LASTNAME CHAR(15) VAR,
     5 WORKDEPT CHAR(3);
/*********************************************************************/
/* THE NUMBER OF COLUMNS DESCRIBED BY THIS DECLARATION IS 5          */
/*********************************************************************/
```

Example: Using DCLGEN NAMES and STRUCTURE options to specify a field name prefix and structure name for the generated output

The following subcommand generates PL/I declarations for table VEMPL and writes them to data set member *prefix* .SRCLIB.DATA(DSN8MPEM). The generated PL/I declarations are in a structure named EMPRECORD, and all host variable names consist of the string FIELD, followed by a number.

```
DCLGEN TABLE(VEMPL) -
       LIBRARY('
prefix
.SRCLIB.DATA(DSN8MPEM)') -
       LANGUAGE(PLI) -
       NAMES(FIELD) -
       STRUCTURE(EMPRECORD) -
       APOST
```

The output looks like this:

```
/*********************************************************************/
/* DCLGEN TABLE(VEMPL) -                                             */
/*        LIBRARY('
prefix
.SRCLIB.DATA(DSN8MPEM)') -                 */
/*        LANGUAGE(PLI) -                                            */
/*        NAMES(FIELD) -                                             */
/*        STRUCTURE(EMPRECORD) -                                     */
/*        APOST                                                      */
/* ... IS THE DCLGEN COMMAND THAT MADE THE FOLLOWING STATEMENTS      */
/*********************************************************************/
EXEC SQL DECLARE VEMPL TABLE
          ( EMPNO                        CHAR(6) NOT NULL,
            FIRSTNME                     VARCHAR(12) NOT NULL,
            MIDINIT                      CHAR(1) NOT NULL,
            LASTNAME                     VARCHAR(15) NOT NULL,
            WORKDEPT                     CHAR(3) NOT NULL
          ) ;

/*********************************************************************/
/* PLI DECLARATION FOR TABLE VEMPL                                   */
/*********************************************************************/
DCL 1 EMPRECORD,
     5 FIELD1   CHAR(6),
     5 FIELD2   CHAR(12) VAR,
     5 FIELD3   CHAR(1),
     5 FIELD4   CHAR(15) VAR,
     5 FIELD5   CHAR(3);
/*********************************************************************/
/* THE NUMBER OF COLUMNS DESCRIBED BY THIS DECLARATION IS 5          */
/*********************************************************************/
```

Example: Generating DECLARE variable statements for columns that are defined with FOR BIT DATA

The following subcommand generates COBOL declarations for table MYTABLE, which contains FOR BIT DATA columns. The DCLBIT(YES) option is specified to cause DCLGEN to generate DECLARE VARIABLE statements for the FOR BIT DATA columns so that applications that include the generated declaration compile correctly when they are compiled with the SQLCCSID option of the Db2 coprocessor.

```
DCLGEN TABLE(MYTABLE)
       LIBRARY('prefix.SRCLIB.DATA(MYTABLE))
       LANGUAGE(COBOL)
       APOST
       DCLBIT(YES)
```

The output looks like this:

```
*******************************************************************
* DCLGEN TABLE(MYTABLE)                                           *
*        LIBRARY('prefix.SRCLIB.DATA(MYTABLE))                    *
*        LANGUAGE(COBOL)                                          *
*        APOST                                                    *
*        DCLBIT(YES)                                              *
* ... IS THE DCLGEN COMMAND THAT MADE THE FOLLOWING STATEMENTS   *
*******************************************************************
     EXEC SQL DECLARE MYTABLE TABLE
     ( COL1                          CHAR(10) NOT NULL,
       COL2                          CHAR(10),
       COL3                          VARCHAR(12) NOT NULL,
       COL4                          VARCHAR(12) NOT NULL
     ) END-EXEC.
*******************************************************************
* DECLARED VARIABLES FOR 'FOR BIT DATA' COLUMNS                   *
*******************************************************************
     EXEC SQL DECLARE
      :COL2
     ,:COL4
     VARIABLE FOR BIT DATA END-EXEC.
*******************************************************************
* COBOL DECLARATION FOR TABLE MYTABLE                             *
*******************************************************************
 01  DCLMYTABLE.
     10 COL1                PIC X(10).
     10 COL2                PIC X(10).
     10 COL3.
        49 COL3-LEN         PIC S9(4) USAGE COMP.
        49 COL3-TEXT        PIC X(12).
     10 COL4.
        49 COL4-LEN         PIC S9(4) USAGE COMP.
        49 COL4-TEXT        PIC X(12).
*******************************************************************
* THE NUMBER OF COLUMNS DESCRIBED BY THIS DECLARATION IS 4       *
*******************************************************************
```

Related tasks

Generating table and view declarations by using DCLGEN (Db2 Application programming and SQL)

Chapter 18. -DISPLAY ACCEL command (Db2)

The DISPLAY ACCEL command displays information about accelerator servers.

Abbreviation: -DIS ACCEL

Environment

This command can be issued from a z/OS console, a DSN session under TSO, a DB2I panel (Db2 COMMANDS), an IMS or CICS terminal, or a program that uses the instrumentation facility interface (IFI).

Data sharing scope: Group or member

Authorization

To execute this command, you must use a privilege set of the process that includes one of the following privileges or authorities:

- DISPLAY privilege
- System DBADM authority
- SYSOPR authority
- SYSCTRL authority
- SYSADM authority

Db2 commands that are issued from a logged-on z/OS console or TSO SDSF can be checked by Db2 authorization by using primary and secondary authorization IDs.

Syntax

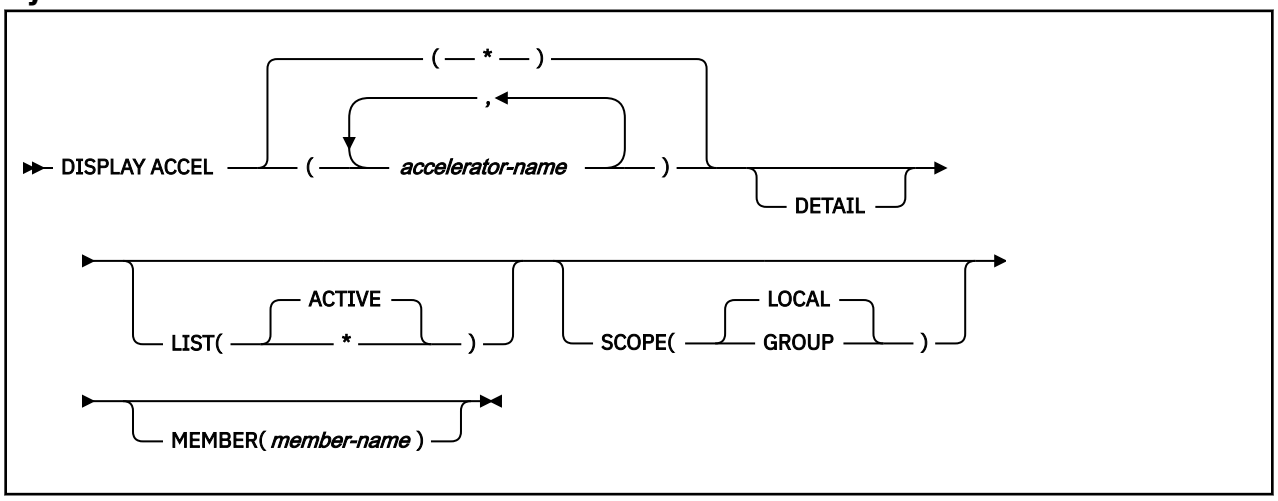

Option descriptions

(*accelerator-name*)
The accelerator server name. This option limits the display to the specified accelerator servers.

(*)
Requests a list of all accelerator servers, whether the servers are currently in use or not. Specifying an asterisk (*) as the accelerator name indicates that the display must include all accelerator servers.

DETAIL
Displays additional information for one or more of the accelerator servers. If DETAIL is not specified, a basic summary report is produced.

© Copyright IBM Corp. 1983, 2024

LIST
Produces a list of accelerator servers that are currently in use or that have been started. Valid values are:

(ACTIVE)
Restricts the list of accelerator servers to those that are currently in use.

(*)
Requests a list of all accelerator servers, whether they are currently in use or not. An accelerator that has just been created appears in the list only if it has been started by using the START ACCEL command.

SCOPE
Specifies the scope of the command. In a non-data-sharing environment, the option is ignored. Valid values are:

(LOCAL)
Displays information only for the accelerator servers for the current data sharing member.

(GROUP)
Displays information for accelerator servers for all members of the data sharing group.

MEMBER
Restricts the display for the identified accelerator server to specific members of the data sharing group. The default behavior is to display accelerator servers on the local member in a data sharing environment. This option is not supported in non-data sharing environments.

Output

Message DSNX830I (Db2 Messages) indicates the beginning of the output of the command.

If the DETAIL keyword is specified, the output includes a separate DSNX830I message for each accelerator server. Otherwise, a single DSNX830I message is issued for all accelerator servers.

Usage notes

Trace information for commands issued with group scope
If this command is issued with options that specify group scope in a Db2 data sharing member, it also runs on all other active members. IFICID 090 trace records for other group members can show that the same command was issued by the SYSOPR authorization ID from the 016.TLPKN5F correlation ID, in addition to the trace records from the member where the original command was issued. See Command scope in Db2 data sharing (Db2 Data Sharing Planning and Administration).

Examples

Example 1: Displaying information about all accelerator servers for a data sharing group
The following command displays information about all of the accelerator servers for all members in a data sharing group:

```
-DIS ACCEL(*) SCOPE(GROUP) LIST(*)
```

The output is similar to the following example:

```
DSNX810I  -DB1A DSNX8CMD DISPLAY ACCEL FOLLOWS -
DSNX830I  -DB1A DSNX8CDA
ACCELERATOR                     MEMB  STATUS  REQUESTS ACTV QUED MAXQ
------------------------------- ---- -------- -------- ---- ---- ----
ACCEL1                          DB1A STARTED     32769    2    5   23
ACCEL2                          DB1A STOPPED     37235    1    7   17
ACCEL3                          DB1A STARTED      3256    5    23  41
DISPLAY ACCEL REPORT COMPLETE
DSN9035I  -DB1A BEGIN OF DISPLAY FOR MEMBER: DB1B
---------------------------------------------
DSNX830I  -DB1B DSNX8CDA
ACCELERATOR                     MEMB  STATUS  REQUESTS ACTV QUED MAXQ
```

```
-------------------------------- ---- -------- -------- ---- ---- ----
ACCEL1                           DB1B STARTED     23456    1    0    2
ACCEL2                           DB1B STOPPED        47    0    0    0
ACCEL3                           DB1B STOPPED        92    0    0    2
DISPLAY ACCEL REPORT COMPLETE
--------END OF DISPLAY FOR MEMBER: DB1B    --------
DSN9035I  -DB1A BEGIN OF DISPLAY FOR MEMBER: DB1C
---------------------------------------------
DSNX830I  -DB1C DSNX8CDA
ACCELERATOR                      MEMB  STATUS  REQUESTS ACTV QUED MAXQ
-------------------------------- ---- -------- -------- ---- ---- ----
ACCEL1                           DB1C STARTED       734    0    0    4
ACCEL2                           DB1C STARTED         2    0    0    0
ACCEL3                           DB1C STARTED        87    0    0    7
DISPLAY ACCEL REPORT COMPLETE
--------END OF DISPLAY FOR MEMBER: DB1C    --------
DSN9035I  -DB1A BEGIN OF DISPLAY FOR MEMBER: DB1D
---------------------------------------------
DSNX830I  -DB1D DSNX8CDA
ACCELERATOR                      MEMB  STATUS  REQUESTS ACTV QUED MAXQ
-------------------------------- ---- -------- -------- ---- ---- ----
ACCEL1                           DB1D STARTED      9210    0    0    1
ACCEL2                           DB1D STOPPED         0    0    0    0
ACCEL3                           DB1D STOPPED        21    0    11  11
DISPLAY ACCEL REPORT COMPLETE
--------END OF DISPLAY FOR MEMBER: DB1D    --------
DSN9022I  -DB1A DSNX8CMD '-DISPLAY ACCEL' NORMAL COMPLETION
```

Example 2: Displaying detailed information about specific accelerator servers

The following command displays detailed information about active accelerator servers ACCEL1 and ACCEL2 for data sharing member DB1D:

```
-DIS ACCEL(ACCEL1,ACCEL2)
     DETAIL
     LIST(ACTIVE)
     SCOPE(LOCAL)
     MEMBER(DB1D)
```

The output that is displayed depends on the accelerator versions that you are using. For example, if you are using IBM Db2 Analytics Accelerator for z/OS V6 or later, output similar to the following example is displayed. A value of N/A in any field indicates that the field does not apply to your installation or is reserved for future use.

```
ACCELERATOR                      MEMB  STATUS  REQUESTS ACTV QUED MAXQ
-------------------------------- ---- -------- -------- ---- ---- ----
ACCEL1                           DB1D  STARTED     9210    7    0  N/A
LOCATION=ACCELERATOR1 HEALTHY
DETAIL STATISTICS
  LEVEL  = AQT07010
  STATUS = ONLINE
  FAILED REQUESTS                                     =        0
  AVERAGE QUEUE WAIT                                  =        0 MS
  TOTAL NUMBER OF ACTIVE PROCESSORS                   =        4
  AVERAGE CPU UTILIZATION ON COORDINATOR NODES        =      .00%
  AVERAGE CPU UTILIZATION ON WORKER NODES             =      .13%
  AVERAGE CPU UTILIZATION ON WORKER NODES             =      .01%
  NUMBER OF ACTIVE WORKER NODES                       =        1
  TOTAL DISK STORAGE                                  =   195114 MB
  DISK STORAGE IN USE FOR THIS DB2 SYSTEM             =        0 MB
  DISK STORAGE IN USE FOR ALL DB2 SYSTEMS             =      106 MB
  TOTAL CPU FOR REQUESTS FOR THIS DB2 SYSTEM          =        0 MS
  TOTAL CPU FOR DATA MAINTENANCE FOR THIS DB2 SYSTEM =        0 MS
  TOTAL CPU FOR REPLICATION FOR THIS DB2 SYSTEM       =        0 MS
  TOTAL MEMORY AVAILABLE FOR USER DATA                =     4803 MB
  TOTAL MEMORY AVAILABLE FOR SQL PROCESSING           =     4547 MB
  INBOUND NETWORK UTILIZATION OF THE ACCELERATOR      =        3 KB
                                                         PER SECOND
  OUTBOUND NETWORK UTILIZATION OF THE ACCELERATOR     =        2 KB
                                                         PER SECOND
  DISPLAY ACCEL REPORT COMPLETE
DSN9022I ) DSNX8CMD '-DISPLAY ACCEL' NORMAL COMPLETION
```

However, the following output is displayed for IBM Db2 Analytics Accelerator for z/OS V5 and earlier:

```
ACCELERATOR                      MEMB  STATUS  REQUESTS ACTV QUED MAXQ
-------------------------------- ---- -------- -------- ---- ---- ----
ACCEL1                           DB1D  STARTED     9210    7    5    9
LOCATION=ACCELERATOR1 HEALTHY
DETAIL STATISTICS
  LEVEL = AQT05015
  STATUS = ONLINE
  FAILED REQUESTS                                       =        3
  AVERAGE QUEUE WAIT                                    =       99
  MAXIMUM QUEUE WAIT                                    =      400
  TOTAL NUMBER OF ACTIVE PROCESSORS                     =        4
  AVERAGE CPU UTILIZATION ON COORDINATOR NODES          =    45.00%
  AVERAGE CPU UTILIZATION ON WORKER NODES               =    40.00%
  AVERAGE DISK IO UTILIZATION                           =    10.00%
  NUMBER OF ACTIVE WORKER NODES                         =        2
  TOTAL DISK STORAGE                                    =    93000 MB
  DISK STORAGE IN USE FOR THIS DB2 SYSTEM               =       27 MB
  DISK STORAGE IN USE FOR ALL DB2 SYSTEMS               =       27 MB
  TOTAL CPU FOR REQUESTS FOR THIS DB2 SYSTEM            =       30 MS
  TOTAL CPU FOR DATA MAINTENANCE FOR THIS DB2 SYSTEM =      110 MS
  TOTAL CPU FOR REPLICATION FOR THIS DB2 SYSTEM         =        0 MS
DISPLAY ACCEL REPORT COMPLETE
DSN9022I ) DSNX8CMD '-DISPLAY ACCEL' NORMAL COMPLETION
```

Example 3: DISPLAY GROUP DETAIL output for multiple accelerators

The following examples shows how Db2 issues a separate DSNX830I message for each accelerator when the DISPLAY GROUP command is issued for multiple accelerators. The message for each accelerator ends with either `DISPLAY ACCEL REPORT CONTINUED`, or `DISPLAY ACCEL REPORT COMPLETE` for the last accelerator.

```
DSNX830I  -DB2A DSNX8CDA 927
ACCELERATOR                      MEMB  STATUS  REQUESTS ACTV QUED MAXQ
-------------------------------- ---- -------- -------- ---- ---- ----
ACCEL1                           DB2A STARTED         0    0    0  N/A
LOCATION=ZP7 HEALTHY
DETAIL STATISTICS
  LEVEL  = AQT0705B
  STATUS = ONLINE
  FAILED REQUESTS                                       =        0
  AVERAGE QUEUE WAIT                                    =      N/A
  TOTAL NUMBER OF ACTIVE PROCESSORS                     =        8
  AVERAGE CPU UTILIZATION ON COORDINATOR NODES          =     4.33%
  AVERAGE CPU UTILIZATION ON WORKER NODES               =     4.33%
  AVERAGE DISK IO UTILIZATION                           =    22.50%
  NUMBER OF ACTIVE WORKER NODES                         =        1
  TOTAL DISK STORAGE                                    = 85783966 MB
  DISK STORAGE IN USE FOR THIS DB2 SYSTEM               =      N/A
  DISK STORAGE IN USE FOR ALL DB2 SYSTEMS               =      N/A
  TOTAL CPU FOR REQUESTS FOR THIS DB2 SYSTEM            =        0 MS
  TOTAL CPU FOR DATA MAINTENANCE FOR THIS DB2 SYSTEM =        0 MS
  TOTAL CPU FOR REPLICATION FOR THIS DB2 SYSTEM         =      N/A
  TOTAL MEMORY AVAILABLE FOR USER DATA                  =     4918 MB
  TOTAL MEMORY AVAILABLE FOR SQL PROCESSING             =     4687 MB
  INBOUND NETWORK UTILIZATION OF THE ACCELERATOR        =     1024 KB
                                                           PER SECOND
  OUTBOUND NETWORK UTILIZATION OF THE ACCELERATOR       =     2048 KB
                                                           PER SECOND
  CURRENT REPLICATION LATENCY FOR THIS DB2 SYSTEM       =      N/A
  NUMBER OF SUCCESSFUL QUERY REQUESTS WITH DELAY PROTOCOL
         FOR ALL DB2 SYSTEMS                            =        0
  NUMBER OF EXPIRED QUERY REQUESTS WITH DELAY PROTOCOL
         FOR ALL DB2 SYSTEMS                            =        0
  REPLICATION VELOCITY                                  =      N/A
DISPLAY ACCEL REPORT CONTINUED
DSNX830I  -DB2A DSNX8CDA 928
ACCELERATOR                      MEMB  STATUS  REQUESTS ACTV QUED MAXQ
-------------------------------- ---- -------- -------- ---- ---- ----
ACCEL                           DB2A STARTED         0    0    0  N/A
LOCATION=ZP8 HEALTHY
DETAIL STATISTICS
  LEVEL  = AQT0705B
  STATUS = ONLINE
  FAILED REQUESTS                                       =        0
  AVERAGE QUEUE WAIT                                    =      N/A
  TOTAL NUMBER OF ACTIVE PROCESSORS                     =        8
```

```
  AVERAGE CPU UTILIZATION ON COORDINATOR NODES       =     2.00%
  AVERAGE CPU UTILIZATION ON WORKER NODES            =     2.00%
  AVERAGE DISK IO UTILIZATION                        =    22.50%
  NUMBER OF ACTIVE WORKER NODES                      =        1
  TOTAL DISK STORAGE                                 = 85783966 MB
  DISK STORAGE IN USE FOR THIS DB2 SYSTEM            =      N/A
  DISK STORAGE IN USE FOR ALL DB2 SYSTEMS            =      N/A
  TOTAL CPU FOR REQUESTS FOR THIS DB2 SYSTEM         =        0 MS
  TOTAL CPU FOR DATA MAINTENANCE FOR THIS DB2 SYSTEM =        0 MS
  TOTAL CPU FOR REPLICATION FOR THIS DB2 SYSTEM      =      N/A
  TOTAL MEMORY AVAILABLE FOR USER DATA               =     4918 MB
  TOTAL MEMORY AVAILABLE FOR SQL PROCESSING          =     4687 MB
  INBOUND NETWORK UTILIZATION OF THE ACCELERATOR     =     1024 KB
                                                       PER SECOND
  OUTBOUND NETWORK UTILIZATION OF THE ACCELERATOR    =     2048 KB
                                                       PER SECOND
  CURRENT REPLICATION LATENCY FOR THIS DB2 SYSTEM    =      N/A
  NUMBER OF SUCCESSFUL QUERY REQUESTS WITH DELAY PROTOCOL
         FOR ALL DB2 SYSTEMS                         =        0
  NUMBER OF EXPIRED QUERY REQUESTS WITH DELAY PROTOCOL
         FOR ALL DB2 SYSTEMS                         =       17
  REPLICATION VELOCITY                               =      N/A
DISPLAY ACCEL REPORT COMPLETE
DSN9022I  -DB2A DSNX8CMD '-DISPLAY ACCEL' NORMAL COMPLETION
```

Related information

IBM Db2 Analytics Accelerator for z/OS documentation

Chapter 19. -DISPLAY ARCHIVE command (Db2)

The Db2 command DISPLAY ARCHIVE displays input archive log information.

Abbreviation: -DIS ARC

Environment

This command can be issued from a z/OS console, a DSN session under TSO, a DB2I panel (DB2 COMMANDS), an IMS or CICS terminal, or a program using the instrumentation facility interface (IFI).

Data sharing scope: Member

Authorization

To execute this command, you must use a privilege set of the process that includes one of the following privileges or authorities:

- DISPLAY privilege
- System DBADM authority
- SYSOPR authority
- SYSCTRL authority
- SYSADM authority

Db2 commands that are issued from a logged-on z/OS console or TSO SDSF can be checked by Db2 authorization using primary and secondary authorization IDs. A logged-on z/OS user ID must be defined in RACF or a similar security server.

Syntax

```
►►─ DISPLAY ARCHIVE ─►◄
```

Output

Message DSNJ322I (Db2 Messages) indicates the beginning of the output of the command.

Usage note

Data sharing members: Although the command ARCHIVE LOG SCOPE(GROUP) or ARCHIVE LOG MODE(QUIESCE) initiates archive processing for all members of a data sharing group, the command DISPLAY ARCHIVE shows information only for the member for which it is issued. To display input archive log information for all members of a data sharing group, enter the command on each member.

Examples

Example: Displaying information about archive log data sets

Issue the following command to display information about archive log data sets that are in use:

```
-DISPLAY ARCHIVE
```

The output is similar to the following output:

```
DSNJ322I -DISPLAY ARCHIVE REPORT FOLLOWS
             COUNT       TIME
          (TAPE UNITS) (MIN,SEC)
DSNZPARM       2         0,00
CURRENT        2         0,00
```

© Copyright IBM Corp. 1983, 2024

```
================================
ADDR STAT CORR-ID  VOLSER DATASET_NAME
03B0 BUSY SHEDDEN  A00001 DSNT2AR1.DT25.D04169.T1328583.A0012701
     RCAL 03RCRSC  MIGRAT DSNT2AR1.DT25.D04169.T1334426.A0012704
A99B BUSY 14DRSTRT ARN690 DSNT2AR1.DT25.D04169.T1346176.A0012705
BDDD BUSY 10LPLALR ARN738 DSNT2AR1.DT25.D04170.T1506437.A0012743
END OF DISPLAY ARCHIVE REPORT.
```

FL 502 The output is similar to the following if the data set is encrypted:

```
DSNJ322I -DISPLAY ARCHIVE REPORT FOLLOWS
COUNT TIME
(TAPE UNITS) (MIN,SEC)
DSNZPARM 2 0,00
CURRENT 2 0,00
================================
ADDR STAT CORR-ID VOLSER DATASET_NAME
03B0 BUSY SHEDDEN A00001 DSNT2AR1.DT25.D04169.T1328583.A0012701
KEY LABEL = DB2SYSTEMKEY01
RCAL 03RCRSC MIGRAT DSNT2AR1.DT25.D04169.T1334426.A0012704
KEY LABEL = DB2SYSTEMKEY01
A99B BUSY 14DRSTRT ARN690 DSNT2AR1.DT25.D04169.T1346176.A0012705
KEY LABEL = DB2SYSTEMKEY01
BDDD BUSY 10LPLALR ARN738 DSNT2AR1.DT25.D04170.T1506437.A0012743
KEY LABEL = DB2SYSTEMKEY02
END OF DISPLAY ARCHIVE REPORT.
```

The report shows the following information:

- The subsystem parameter values for MAX RTU (COUNT) and DEALLC PERIOD TIME as recorded in the DSNZPxxx load module
- Current specifications for the COUNT and TIME parameters
- Availability status of allocated archive log data sets
- Volume and data set names that are associated with current archive log read requests
- KEY LABEL information

Chapter 20. -DISPLAY BLOCKERS command (Db2)

The Db2 command DISPLAY BLOCKERS displays locks and claims that active threads hold against the databases that are specified in the command.

Abbreviation: -DIS BL

Environment

This command can be issued from a z/OS console, a DSN session under TSO, a DB2I panel (DB2COMMANDS), an IMS or CICS terminal, or a program using the instrumentation facility interface (IFI).

Authorization

The DISPLAY privilege allows users to obtain information for any database. The resulting DISPLAY BLOCKERS output lists the databases for which the primary authorization ID or any of the secondary authorization IDs has the DISPLAYDB privilege. An error message is produced if the set of privileges for a specified database does not include one of the following privileges or authorities:

- DISPLAYDB privilege
- DISPLAY privilege
- DBMAINT authority
- DBCTRL authority
- DBADM authority
- System DBADM authority
- SYSOPR authority
- SYSCTRL authority
- SYSADM authority

For implicitly created databases, the database privilege or authority can be held on the implicitly created database or on DSNDB04.

Db2 commands that are issued from a logged-on z/OS console or TSO SDSF can be checked by Db2 authorization using primary and secondary authorization IDs. A logged-on z/OS user ID must be defined in RACF or a similar security server.

Syntax

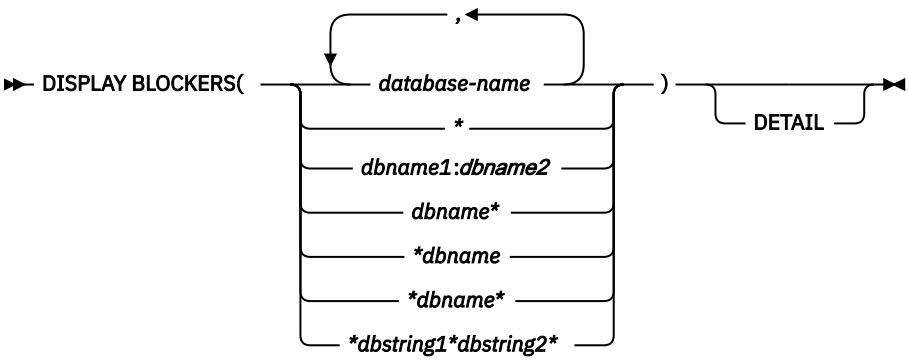

© Copyright IBM Corp. 1983, 2024

Option descriptions

(*database-name*,...)

Identifies one or more databases that you want to display information for. The *dbname* and *dbstring* variables can have any of the forms that are listed in the following table, where *dbname1* and *dbname2* represent any 1- to 8-character string, and *dbname* represents any 1- to 7-character string:

Table 10. Forms of dbname and dbstring

Form	Displays the information of...
dbname1:dbname2	All databases with names, in UNICODE order, that are between *dbname1* and *dbname2* inclusive
*dbname**	All databases with names that begin with the string *dbname*
**dbname*	All databases with names that end with the string *dbname*
dbname	All databases with names that contain the string *dbname*
dbstring1*dbstring2	All databases with names that contain the strings *dbstring1* and *dbstring2*

(*)

Displays information about all databases that are defined to the Db2 subsystem for which the privilege set of the process has the required authorization.

DETAIL

Displays additional report information about each lock or claim. If DETAIL is not specified, a basic summary report is produced that displays a maximum of 5,000 locks and claims. When DETAIL is specified, the report displays a maximum of 1,000 locks and claims.

Output

Message DSNT369I indicates the beginning of the command output. For a detailed description of the output, see DSNT369I.

Examples

Displaying summary information about locks and claims that are held against specified databases

The following command displays a basic summary report about locks and claims that are held against the Db2 catalog and directory databases.

```
-DISPLAY BLOCKERS (DSNDB06,DSNDB01)
```

The output is similar to this output:

```
DSNT360I  -DB2A ************************************
DSNT369I  -DB2A *  DISPLAY BLOCKERS SUMMARY REPORT
                *    2020-02-18-15.21.10.467383
DSNT360I  -DB2A ************************************
DSNT397I  -DB2A
-------------------------------------------------------------------
REPORT: DISPLAY BLOCKERS REPORT
-------------------------------------------------------------------
T LT DBNAME    DBID  NAME      OBID  AGE (SHORT)  TOKEN   MEMBER
- -- --------  ----  --------  ----  -----------  ------  --------
L 02 DSNDB06   0006  SYSUSER   000F  0.013498 S           DB2A
C 80 DSNDB06   0006  DSNKDX02  008E  0.013285 S           DB2A
C 80 DSNDB06   0006  DSNAUH01  0070  0.013285 S           DB2A
C 80 DSNDB06   0006  SYSTSPKD  0812  0.013285 S           DB2A
C 80 DSNDB06   0006  SYSUSER   000F  0.013285 S           DB2A
L 06 DSNDB06   0006  SYSTSPKD  0812  0.012858 S           DB2A
```

```
-------------------------------------------------------------------
INFO: DIAGNOSTIC AND INFORMATIONAL MESSAGES
-------------------------------------------------------------------
T DBNAME    MEMBER    INFORMATIONAL DESCRIPTION
- --------  --------  ----------------------------------------
I DSNDB01             NO LOCKS OR CLAIMS FOR THE DATABASE
-------------------------------------------------------------------
DSN9022I  -DB2A DSNZACMD '-DISPLAY BLOCKERS' NORMAL COMPLETION
```

Displaying summary information about locks and claims that are held against specified databases

The following command displays a basic summary report about locks and claims that are held against the Db2 catalog and directory databases. This report also includes errors that were encountered during command processing because the required IRLM PTF is missing.

```
-DISPLAY BLOCKERS (DSNDB06,DSNDB01)
```

The output is similar to this output:

```
DSNT360I  -DB2A ************************************
DSNT369I  -DB2A *  DISPLAY BLOCKERS SUMMARY REPORT
               *    2020-02-18-15.22.15.384976
DSNT360I  -DB2A ************************************
DSNT397I  -DB2A
-------------------------------------------------------------------
ERRORS: ERRORS PROCESSING DISPLAY BLOCKERS
-------------------------------------------------------------------
T DBNAME    MEMBER    ERROR DESCRIPTION
- --------  --------  ----------------------------------------
E           DB2B      MISSING PH16439 - REPORT INCOMPLETE
E           DB2A      MISSING PH16439 - REPORT INCOMPLETE
E           DB2A      MISSING PH16439 - AGE VALUES MAY BE UNKNOWN
-------------------------------------------------------------------
REPORT: DISPLAY BLOCKERS REPORT
-------------------------------------------------------------------
T LT DBNAME    DBID  NAME      OBID  AGE (SHORT)  TOKEN   MEMBER
- -- --------  ----  --------  ----  -----------  ------  --------
L 02 DSNDB06   0006  SYSUSER   000F  UNKNOWN              DB2A
C 80 DSNDB06   0006  DSNKDX02  008E  0.238874 S           DB2A
C 80 DSNDB06   0006  DSNAUH01  0070  0.238874 S           DB2A
C 80 DSNDB06   0006  SYSTSPKD  0812  0.238874 S           DB2A
C 80 DSNDB06   0006  SYSUSER   000F  0.238874 S           DB2A
L 06 DSNDB06   0006  SYSTSPKD  0812  UNKNOWN              DB2A
-------------------------------------------------------------------
INFO: DIAGNOSTIC AND INFORMATIONAL MESSAGES
-------------------------------------------------------------------
T DBNAME    MEMBER    INFORMATIONAL DESCRIPTION
- --------  --------  ----------------------------------------
I DSNDB01             NO LOCKS OR CLAIMS FOR THE DATABASE
-------------------------------------------------------------------
DSN9022I  -DB2A DSNZACMD '-DISPLAY BLOCKERS' NORMAL COMPLETION
```

Displaying detailed information about locks and claims that are held against a specified database

The following command displays a detailed report that includes additional information about locks and claims that are held against the MYDB database.

```
-DISPLAY BLOCKERS (MYDB) DETAIL
```

The output is similar to this output:

```
DSNT360I  -DB2A ************************************
DSNT369I  -DB2A *  DISPLAY BLOCKERS DETAILED REPORT
               *    2020-02-18-15.29.50.162304
DSNT360I  -DB2A ************************************
DSNT397I  -DB2A
-------------------------------------------------------------------
REPORT: DISPLAY BLOCKERS REPORT
-------------------------------------------------------------------
T LT DBNAME    DBID  NAME      OBID  AGE (SHORT)  TOKEN   MEMBER
- -- --------  ----  --------  ----  -----------  ------  --------
C 80 MYDB      011E  MYTSP     0002  0.177792 S   13      DB2A
               CONNID:  BATCH
               CORRID:  HELLOW5
               AGE:     0.177792 S
               USERID:  SYSADM
               LUWID:   USIBMSY.SYEC1DB2.D6C8DA91FD72=13
```

```
                DURATION: CM
                ACQUIRED: 2020-02-18-15.29.49.309431494140
-------------------------------------------------------------------
T LT DBNAME    DBID  NAME      OBID  AGE (SHORT)  TOKEN   MEMBER
- -- --------  ----  --------  ----  -----------  ------  --------
L 12 MYDB      011E  MYTSP     0001  0.177676 S   13      DB2A
                CONNID:  BATCH
                CORRID:  HELLOW5
                AGE:     0.177676 S
                USERID:  SYSADM
                LUWID:   USIBMSY.SYEC1DB2.D6C8DA91FD72=13
                PKGNAME: 'MYPKG12345678901234567890.MYPROG.1AD91B511A8'
                         '174F1'
                STATE:   04
                DURATION: 40
                ACQUIRED: 2020-02-18-15.29.49.309514505126
-------------------------------------------------------------------
T LT DBNAME    DBID  NAME      OBID  AGE (SHORT)  TOKEN   MEMBER
- -- --------  ----  --------  ----  -----------  ------  --------
L 02 MYDB      011E  MYTSP     0002  0.176087 S   13      DB2A
                CONNID:  BATCH
                CORRID:  HELLOW5
                AGE:     0.176087 S
                USERID:  SYSADM
                LUWID:   USIBMSY.SYEC1DB2.D6C8DA91FD72=13
                STATE:   02
                DURATION: 40
                ACQUIRED: 2020-02-18-15.29.49.310727817626
-------------------------------------------------------------------
T LT DBNAME    DBID  NAME      OBID  AGE (SHORT)  TOKEN   MEMBER
- -- --------  ----  --------  ----  -----------  ------  --------
L 10 MYDB      011E  MYTBL12*  0003  0.175989 S   13      DB2A
                CONNID:  BATCH
                CORRID:  HELLOW5
                AGE:     0.175989 S
                USERID:  SYSADM
                LUWID:   USIBMSY.SYEC1DB2.D6C8DA91FD72=13
                OBJNAME: MYTBL12345678901234567890
                STATE:   02
                DURATION: 40
                ACQUIRED: 2020-02-18-15.29.49.310776630126
-------------------------------------------------------------------
DSN9022I  -DB2A DSNZACMD '-DISPLAY BLOCKERS' NORMAL COMPLETION
```

Related tasks

Identify applications that are incompatible with online migration (Db2 Installation and Migration)

Related reference

BLOCKING_THREADS table function (Db2 SQL)

Chapter 21. -DISPLAY BUFFERPOOL command (Db2)

The Db2 command DISPLAY BUFFERPOOL displays the current status for one or more active or inactive buffer pools.

Abbreviation: -DIS BPOOL

Environment

This command can be issued from a z/OS console, a DSN session under TSO, a DB2I panel (DB2 COMMANDS), an IMS or CICS terminal, or a program using the instrumentation facility interface (IFI).

Data sharing scope: Member

Authorization

To execute this command, you must use a privilege set of the process that includes one of the following privileges or authorities:

- DISPLAY privilege
- System DBADM authority
- SYSOPR authority
- SYSCTRL authority
- SYSADM authority

Db2 commands that are issued from a logged-on z/OS console or TSO SDSF can be checked by Db2 authorization using primary and secondary authorization IDs. A logged-on z/OS user ID must be defined in RACF or a similar security server.

© Copyright IBM Corp. 1983, 2024

Syntax

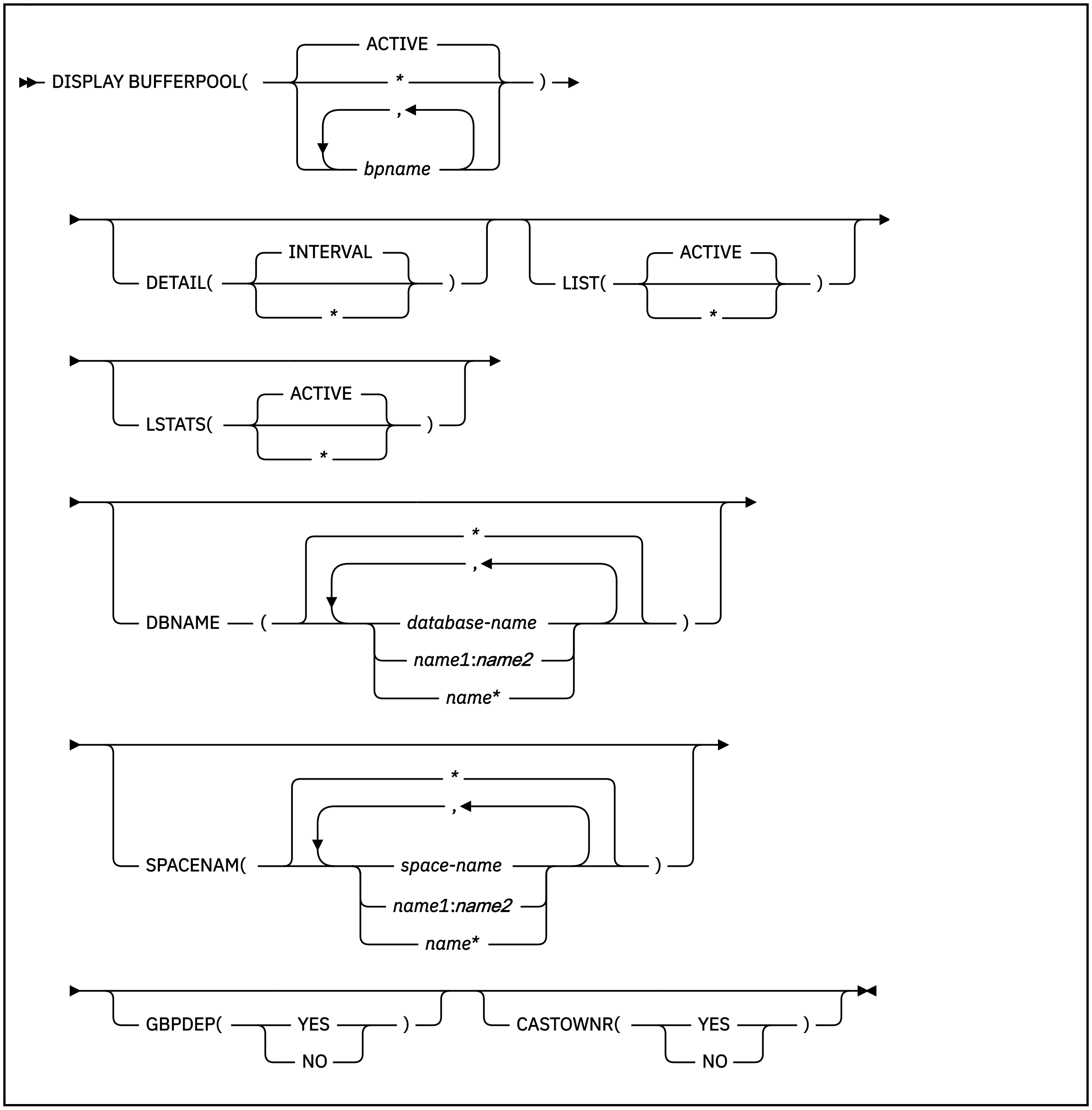

Option descriptions

(ACTIVE)
Displays the current buffer pool status for all active buffer pools.

(*)
Displays the current buffer pool status for all active or inactive buffer pools.

(*bpname*)
Names the buffer pool for which current status is to be displayed.

- 4-KB page buffer pools are named BP0 through BP49
- 8-KB page buffer pools are named BP8K0 through BP8K9
- 16-KB page buffer pools are named BP16K0 through BP16K9
- 32-KB page buffer pools are named BP32K through BP32K9

DETAIL

Produces a detail report for one or more buffer pools. If DETAIL is not specified, a summary report is produced.

(INTERVAL)

Requests statistics accumulated since the last incremental display, or since the buffer pool was first activated if no previous incremental display exists.

(*)

Requests statistics accumulated since the buffer pool was first activated.

LIST

Lists the open index spaces and table spaces associated with the buffer pools included in the report. Basic information is provided for non-data-sharing systems while more detail is provided if data sharing is active.

(ACTIVE)

Restricts the list of open index spaces and table spaces to those that are currently in use.

(*)

Requests a list of all open index spaces and table spaces, whether currently in use or not.

LSTATS

Lists data set statistics for the open index spaces and table spaces associated with the buffer pools included in the report. The statistics displayed are incremental since the last time they were displayed.

(ACTIVE)

Restricts the list statistics to those data sets that are currently in use.

The `default` is ACTIVE when LIST is not specified or if LIST is specified with no parameter. If LIST is specified with a parameter and LSTATS has no parameter, the parameter specified for LIST is used for LSTATS.

(*)

Includes statistics for all open index spaces and table spaces, whether currently in use or not.

DBNAME

Specifies which databases are included in the LIST display and the LSTATS display. If you specify DBNAME without LIST, LIST(ACTIVE) is assumed.

Abbreviation: DBN

(*database-name* , ...)

Identifies one or more databases to be included in the LIST and LSTATS displays. *database-name* can have any of the forms in the following list. In the list, *name1* and *name2* represent strings of one- to eight-characters. *name* represents a string of one- to eight-characters.

Form
Displays the status of...

name1
The database *name1*

name1:name2
All databases with names from *name1* to *name2* in a sorted list of database names.

name*
All databases whose names begin with the string *name*

(*)

Displays information on all databases that match the LIST specification. This is the default.

SPACENAM

Specifies which table spaces or index spaces within the specified databases to include in the LIST display and the LSTATS display. If you use SPACENAM without DBNAME, DBNAME(*) is assumed.

Abbreviation: SPACE

(*)
Displays information about all table spaces and index spaces of the specified databases. This is the default.

(*space-name* , ...)
Identifies one or more spaces to be included in the LIST and LSTATS displays. You can write *space-name* like *database-name* to designate:

- The name of a single table space or index space
- A range of names
- A partial name followed by a pattern-matching character

GBPDEP
Indicates whether to restrict the list of data sets to those that are group buffer pool dependent. This option is not valid if this is a non-data sharing Db2.

(YES)
Restricts the list of page sets to those that are group buffer pool dependent (GBP-dependent). An index space or table space is GBP-dependent if either of these conditions are true:

- Inter-Db2 R/W interest exists in it.
- Changed pages from it exist in the group buffer pool that have not yet been written to disk.

(NO)
Restricts the list of page sets to those that are non-group buffer pool dependent.

CASTOWNR
Indicates whether to restrict the list of data sets to those for which this Db2 member is the castout owner. This option is not valid if this is a non-data sharing Db2.

(YES)
Restricts the list of page sets for which this Db2 member is the castout owner.

(NO)
Restricts the list of page sets for which this Db2 member is not the castout owner.

Output

Message DSNB401I (Db2 Messages) indicates the beginning of the output of the command.

Examples

You can generate a summary report for a buffer pool.

```
-DISPLAY BUFFERPOOL(BP0)
```

You can generate detail report that includes all summary report information and additional buffer pool related statistics, by specifying the DETAIL keyword.

```
-DISPLAY BUFFERPOOL(BP0) DETAIL
```

You generate a summary or detail report that also lists open table spaces and index spaces associated with the buffer pool, by specifying the LIST keyword.

```
-DISPLAY BUFFERPOOL(BP0) LIST
```

You generate statistics report for each table space and index space that is associated with a buffer pool, by specifying the LSTATS keyword. LSTATS(*) specifies that the output includes statistics for both active and inactive index spaces and table spaces.

```
-DISPLAY BUFFERPOOL(BP0) LSTATS(*)
```

Related tasks

Monitoring buffer pools (Db2 Administration Guide)

Monitoring and tuning buffer pools by using online commands (Db2 Performance)

Related information

DSNB401I (Db2 Messages)

DSNB401I **BUFFERPOOL NAME *bp-name*, BUFFERPOOL ID *bp-id*, USE COUNT *use-count***

Explanation

This message displays output from the DISPLAY BUFFERPOOL command. For each buffer pool, this message marks the beginning of multiple lines of information about that buffer pool. Some lines in the output have their own message numbers or alphanumeric identifiers to assist with identification.

The first line (DSNB401I) contains the following information:

bp-name
: The external name of the buffer pool. *bp-name* can be one of the following values: BP0 to BP49, BP8K0 to BP8K9, BP16K0 to BP16K9, BP32K, or BP32K1 to BP32K9.

bp-id
: The internal identifier for the buffer pool. *bp-id* can be one of the following values: 0 to 49, 80 to 89, 100 to 109, or 120 to 129.

use-count
: The number of open table spaces or index spaces that use this buffer pool. A value of zero means that the buffer pool is inactive.

The remaining output for each buffer pool consists of one or more of the following sections, in the indicated order:

- DSNB402I: Information about allocation status
- DSNB404I: Threshold information
- DSNB406I: PGFIX and PGSTEAL information
- DSNB409I: Start time of the statistics interval for DETAIL(INTERVAL)
- DSNB410I: Start time of the statistics interval for DETAIL(*)
- DSNB411I: Page read statistics
- DSNB412I: Sequential prefetch statistics
- DSNB413I: List prefetch statistics
- DSNB414I: Dynamic prefetch statistics
- DSNB415I: Prefetch statistics
- DSNB416I: Overflow statistics for PGSTEAL(NONE) buffer pools
- DSNB420I: Page write statistics
- DSNB421I: Page-write threshold statistics
- DSNB431I: Information about allocation status for simulated buffer pools
- DSNB432I: Simulated buffer pool activity
- DSNB440I: Parallel activity statistics
- DSNB441I: LPL activity statistics
- DSNB453I: Cached and changed page statistics
- DSNB455I: Synchronous I/O delay statistics
- DSNB456I: Asynchronous I/O delay statistics
- DSNB457I: Simulated buffer pool page statistics

- DSNB460I: Page set and partition list information (for a data-sharing environment)
- DSNB464I: Page set and partition list information (for a non-data-sharing environment)
- DSNB466I: Page set and partition statistics
- DSNB467I: Data set statistics
- DSNB546I: Frame size allocation
- DSNB550I: Page stealing method change

If information cannot be reported, one or more of the following messages is returned:

- DSNB408I: No detail statistics available
- DSNB459I: Open failure for a data set
- DSNB463I: No objects matched selection criteria

The DISPLAY BUFFERPOOL output ends with one of the following messages:

- DSN9022I: Normal completion
- DSNB499I: Display terminated because of insufficient space

DSNB402I: Information about allocation status

The basic buffer pool information is followed by a description of the allocation status of the buffer pool.

The values of VPSIZE MINIMUM and VPSIZE MAXIMUM are used only when AUTOSIZE =YES.

```
DSNB402I - BUFFER POOL SIZE = pool-size BUFFERS  AUTOSIZE = autosize
           VPSIZE MINIMUM = minimum size VPSIZE MAXIMUM = maximum-size
             ALLOCATED      = allocated-buffers   TO BE DELETED   = delete-buffers
             IN-USE/UPDATED = current-buffers
             OVERFLOW ALLOC = over-buffers
```

BUFFER POOL SIZE = *pool-size* BUFFERS
The user-specified buffer pool size.

AUTOSIZE = *autosize*
The buffer pool AUTOSIZE attribute that is applicable to the current allocation of the buffer pool.

YES
The buffer pool uses Workload Manager (WLM) services, if available, to automatically adjust the size of the buffer pool. The size is adjusted based on dynamic monitoring of the workload goals and the storage that is available on the system.

NO
The buffer pool does not use WLM services for automatic sizing adjustment of buffer pools.

VPSIZE MINIMUM = *minimum size*
The minimum size of the buffer pool. This value is meaningful only when the value of *autosize* is YES. If the value was never specified, a value of 0 is shown, and Db2 uses a default value of 75% of the specified value of VPSIZE.

VPSIZE MAXIMUM = *maximum-size*
The maximum size of the buffer pool. This value is meaningful only when the value of *autosize* is YES. If the value was never specified, a value of 0 is shown, and Db2 uses the defaults value, which is 25% greater than the specified VPSIZE value.

ALLOCATED = *allocated-buffers*
The number of allocated buffers in an active buffer pool.

TO BE DELETED = *delete-buffers*
The number of buffers to be deleted in an active buffer pool because of pool contraction.

IN-USE/UPDATED = *current-buffers*
The number of currently active buffers in the buffer pool. These buffers cannot be stolen.

OVERFLOW ALLOC = *over-buffers*
The number of allocated buffers in the overflow area for a buffer pool that uses PGSTEAL(NONE). The buffers that are allocated to the overflow area are counted within of the VPSIZE value, and they are counted as part of the ALLOCATED value.

DSNB404I: Threshold information

The information about allocation status is followed by information about the user-modifiable thresholds for the buffer pool.

```
DSNB404I - THRESHOLDS -
             VP SEQUENTIAL            = vpseq
             SP SEQUENTIAL            = spseq
             DEFERRED WRITE           = dwt
             VERTICAL DEFERRED WRT    = dwv1,dwv2
             PARALLEL SEQUENTIAL      = vppseqt
             ASSISTING PARALLEL SEQT  = vpxpseqt
```

vpseq
The sequential steal threshold for the virtual pool, expressed as a percentage of the total buffer pool size.

spseq
The sequential steal threshold for the simulated pool, expressed as a percentage of the total simulated buffer pool size.

dwt
The free-buffer deferred write threshold for the buffer pool, expressed as a percentage of the total buffer pool size.

dwv1
The vertical deferred write threshold for the buffer pool, expressed as a percentage of the total buffer pool size.

dwv2
The vertical deferred write threshold for the buffer pool, expressed as an absolute number of buffers. *dwv2* is used to determine the threshold only if *dwv1* is 0 and *dwv2* is non-zero. Otherwise, *dwv1* is used to determine the threshold.

vppseqt
The sequential threshold for parallel query processing, expressed as a percentage of the virtual sequential steal threshold. When the threshold is set to 0, parallel query processing is not supported.

vpxpseqt
The assisting parallel sequential threshold, expressed as a percentage of the sequential threshold for parallel query processing. Use the *vpxpseqt* value to control how much buffer resource is used when this Db2 member is assisting another member of the group in parallel processing. When the threshold is set to 0, this buffer pool is not used to assist other data-sharing members in processing a query. In a non-data- sharing environment, this value is ignored.

DSNB406I: PGFIX and PGSTEAL information

The DISPLAY BUFFERPOOL output includes a description of the PGFIX and PGSTEAL attributes for the buffer pool.

CURRENT = *current-pgfix*
The value of the page fix (PGFIX) attribute for the current allocation of the buffer pool.

YES
The buffer pool is fixed in real storage for the long term.

NO
The buffer pool is fixed in real storage only during an I/O operation.

PENDING = *pending-pgfix*
The value of the PGFIX attribute that is to be applied for the next allocation of the virtual buffer pool.

YES
The buffer pool is to be fixed in real storage for the long term.

NO
The buffer pool is to be fixed in real storage only during an I/O operation.

PAGE STEALING METHOD -

CURRENT = ***current-pgsteal***
The value of the page stealing method that is in use for the buffer pool

LRU
The least recently used (LRU) algorithm is used to manage page stealing. This method is the default value.

FIFO
The first-in, first-out (FIFO) algorithm is used to manage page stealing.

NONE
No page stealing occurs. Objects that use this buffer pool are kept resident.

PENDING = ***pending-pgsteal***
The value of the page stealing method (PGSTEAL) that is to be applied for the next allocation of the virtual buffer pool.

LRU
The least recently used (LRU) algorithm is used to manage page stealing. This method is the default value.

FIFO
The first-in, first-out (FIFO) algorithm is used to manage page stealing.

NONE
No page stealing occurs. Objects that use this buffer pool are kept resident.

Related information

Fixing a buffer pool in real storage (Db2 Performance)
Choosing a page-stealing algorithm (Db2 Performance)

DSNB408I: No detail statistics available

DSNB408I indicates that, although you specified the DETAIL option on the DISPLAY BUFFERPOOL command, no detail statistics are available for the requested buffer pool. The statistics are not available because the pool has not been activated since Db2 started.

BUFFER POOL ***bp-name***
The name of the buffer pool.

DSNB409I: Start time of the statistics interval for DETAIL(INTERVAL)

When you specify the DETAIL(INTERVAL) option, the output includes the start time of the interval for which the statistics were accumulated.

```
DSNB409I - INCREMENTAL STATISTICS SINCE base-time
```

base-time
The start time. This value is either the time of the previous incremental display or, if no previous incremental display exists, the time that the buffer pool was first activated.

The format is *hh:mm:ss month dd, yyyy*

hh:mm:ss
The time expressed as hour:minutes:seconds.

month
An alphanumeric abbreviation for the month. For example, a value of OCT means October.

dd
The day of the month.

yyyy
The year.

DSNB410I: Start time of the statistics interval for DETAIL(*)

When you specify the DETAIL(*) option, the output includes the start time of the interval for which the statistics were accumulated.

```
DSNB410I - CUMULATIVE STATISTICS SINCE base-time
```

base-time
The start time. This value is the time the buffer pool was first activated.

The format is *hh:mm:ss month dd, yyyy*

hh:mm:ss
The time expressed as hour:minutes:seconds.

month
An alphanumeric abbreviation for the month. For example, a value of OCT means October.

dd
The day of the month.

yyyy
The year.

DSNB411I: Page read statistics

When you specify the DETAIL option, the output includes the page read statistics for the buffer pool.

```
DSNB411I - RANDOM GETPAGE    = rgp
           SYNC READ I/O (R) = srr
           SEQ.   GETPAGE    = sgp
           SYNC READ I/O (S) = srs
           SYNC READ I/O (ZHL) = srrz
           DMTH HIT          = dmt
           PAGE-INS REQ      = pir
           SEQUENTIAL        = seq
           VPSEQT HIT        = vsh
           RECLASSIFY        = rcy
```

RANDOM GETPAGE = *rgp*
The number of nonsequential GETPAGE requests.

SYNC READ I/O (R) = *srr*
The number of synchronous read I/O operations for nonsequential GETPAGE requests.

SYNC READ I/O (ZHL) = *srrz*
The number of synchronous read I/O operations using zHyperLink.

SEQ. GETPAGE = *sgp*
The number of sequential GETPAGE requests.

SYNC READ I/O (S) = *srs*
The number of synchronous read I/O operations for sequential GETPAGE requests.

DMTH HIT = *dmt*
The number of times that the data management threshold was reached.

PAGE-INS REQ = *pir*
The number of page-in operations that are required for read I/O.

SEQUENTIAL = *seq*
The number of buffers on the sequential least-recently-used (SLRU) chain.

VPSEQT HIT = *vsh*
The number of times that the size of the SLRU chain reached the sequential steal threshold (the VPSEQT value) for the buffer pool.

RECLASSIFY = *rcy*
A statistic that is used by IBM for serviceability.

Related information

Buffer pool thresholds that you can change (Db2 Performance)
Chapter 6, “-ALTER BUFFERPOOL command (Db2),” on page 27

DSNB412I: Sequential prefetch statistics

When you specify the DETAIL option, the output includes the sequential prefetch statistics for the buffer pool.

REQUESTS = *pft*
The number of times that sequential prefetch was requested.

PREFETCH I/O = *pio*
The number of sequential prefetch read I/O operations.

PAGES READ = *pfp*
The number of pages that are read because of sequential prefetch.

Related information

Sequential prefetch (PREFETCH='S') (Db2 Performance)

DSNB413I: List prefetch statistics

When you specify the DETAIL option, the output includes the list prefetch statistics for the buffer pool.

```
DSNB413I - LIST PREFETCH -
             REQUESTS        =        pft   PREFETCH  I/O   =        pio
             PAGES READ      =        pfp
```

REQUESTS = *pft*
The number of times that list prefetch was requested.

PREFETCH I/O = *pio*
The number of list prefetch read I/O operations.

PAGES READ = *pfp*
The number of pages that are read because of list prefetch.

Related information

List prefetch (PREFETCH='L' or 'U') (Db2 Performance)

DSNB414I: Dynamic prefetch statistics

When you specify the DETAIL option, the output includes the dynamic prefetch statistics for the buffer pool.

```
DSNB414I - DYNAMIC PREFETCH -
             REQUESTS        =        pft   PREFETCH  I/O   =        pio
             PAGES READ      =        pfp
```

REQUESTS = *pft*
The number of times that dynamic prefetch was requested.

PREFETCH I/O = *pio*
The number of dynamic prefetch read I/O operations.

PAGES READ = *pfp*
The number of pages that are read because of dynamic prefetch.

Related information

Dynamic prefetch (PREFETCH='D') (Db2 Performance)

DSNB415I: Prefetch statistics

When you specify the DETAIL option, the output includes the prefetch statistics for the buffer pool.

```
DSNB415I - PREFETCH DISABLED -
             NO BUFFER       =        pfd   NO READ ENGINE  =           ree
```

NO BUFFER = *pfd*
The number of times that prefetch was disabled for one of the following reasons:

- The buffer pool reached the prefetch disabled threshold (90% full).
- A user disabled prefetch by setting the VPSEQT threshold for the buffer pool to zero.

NO READ ENGINE = *ree*
The number of times that prefetch was disabled because an asynchronous read processor was not available.

Related information

Read operations and prefetch I/O (Db2 Performance)

DSNB416I: Overflow statistics for PGSTEAL(NONE) buffer pools

When you specify the DETAIL option, the output includes the page read statistics for the overflow area.

```
DSNB416I - OVERFLOW RANDOM GETPAGE    = argp
           OVERFLOW SYNC READ I/O (R) = asrr
           OVERFLOW SEQ.   GETPAGE    = asgp
           OVERFLOW SYNC READ I/O (S) = asrs
```

OVERFLOW RANDOM GETPAGE = *argp*
The number of nonsequential getpage requests that use overflowed buffers.

VERFLOW SYNC READ I/O (R) = *asrr*
The number of synchronous read I/O operations for nonsequential getpage requests that use overflowed buffers.

OVERFLOW SEQ. GETPAGE =*asgp*
The number of sequential getpage requests that use overflowed buffers.

OVERFLOW SYNC READ I/O (S) = *asrs*
The number of synchronous read I/O operations for sequential getpage requests that use overflowed buffers.

Related information

Choosing a page-stealing algorithm (Db2 Performance)

DSNB420I: Page write statistics

When you specify the DETAIL option, the output includes the page write statistics for the buffer pool.

SYS PAGE UPDATES = *pages-updated*
The number of buffer updates.

SYS PAGES WRITTEN = *pages-written*
The number of pages that are written to disk.

ASYNC WRITE I/O = *async-writes*
The number of asynchronous write I/O operations.

SYNC WRITE I/O = *sync-writes*
The number of synchronous write I/O operations.

PAGE-INS REQ = *page-ins*
The number of page-ins that are required for write I/O.

DSNB421I: Page-write threshold statistics

When you specify the DETAIL option, the output includes the page-write threshold statistics for the buffer pool.

```
DSNB421I - DWT HIT           =        dwt VERTICAL DWT HIT  =           vdw
```

DWT HIT = *dwt*
The number of times that the deferred write threshold was reached.

VERTICAL DWT HIT = *vdw*
The number of times that the vertical deferred write threshold was reached.

Related information

Buffer pool thresholds that you can change (Db2 Performance)

DSNB431I: Information about allocation status for simulated buffer pools

The description of the allocation status of the buffer pool is followed by a description of the allocation status of the simulated buffer pool.

```
DSNB431I - SIMULATED BUFFER POOL SIZE = pool-size BUFFERS
             ALLOCATED       = allocated-buffers
             IN-USE          = current-in-use   HIGH-IN-USE = high-in-use
             SEQ-IN-USE      = current-sequential-in-use HIGH SEQ-IN-USE = high-sequential-in-use
```

SIMULATED BUFFER POOL SIZE = *pool-size* BUFFERS
The user-specified simulated buffer pool size.

ALLOCATED = *allocated-buffers*
The number of simulated buffers that are currently allocated in the simulated buffer pool.

IN-USE = *current-in-use*
The number of simulated buffers that are currently being used to track pages.

HIGH IN-USE = *high-in-use*
The highest number of simulated buffers that have been in use in the simulated buffer pool since the buffer pool simulation began.

SEQ IN-USE = *current-sequential-in-use*
The number of simulated buffers for sequentially accessed pages that are currently in use in the simulated buffer pool.

HIGH SEQ-IN-USE = *high-sequential-in-use*
The highest number of simulated buffers for sequentially accessed pages that have been in use in the simulated buffer pool since the buffer pool simulation began.

DSNB432I: Simulated buffer pool activity

When you specify the DETAIL option, the output includes statistics on activity in the simulated buffer pool, including the numbers of page accesses that the buffer pool simulation determined could be avoided, for various types of read activity.

```
DSNB432I - SIMULATED BUFFER POOL ACTIVITY -
             AVOIDABLE READ PAGE MISSES -
               SYNC    FROM DASD (R) = pages-sync-rand-dasd
               SYNC    FROM DASD (S) = pages-sync-seq-dasd
               ASYNC   FROM DASD     = pages-async-dasd
               SYNC    FROM GBP (R)  = pages-sync-rand-gbp
               SYNC    FROM GBP (S)  = pages-sync-seq-gbp
               ASYNC   FROM GBP      = pages-async-gbp
             PAGES MOVED INTO SIMULATED BUFFER POOL = pages-to-sim-bp
             TOTAL AVOIDABLE SYNC I/O DELAY = sync-io-delay MILLISECONDS
```

pages-sync-rand-dasd
The number of pages accessed randomly by avoidable synchronous read I/O from disk.

pages-sync-seq-dasd
The number of pages accessed sequentially by avoidable synchronous read I/O from disk.

pages-async-dasd
The number of pages prefetched by avoidable asynchronous read I/O from disk.

pages-sync-rand-gbp
The number of pages accessed randomly by avoidable synchronous read from the group buffer pool..

pages-sync-seq-gbp
The number of pages accessed sequentially by avoidable synchronous read from the group buffer pool.

pages-async-gbp
The number of pages accessed by avoidable asynchronous read from the group buffer pool.

pages-to-sim-bp
The number of pages that were logically moved from the virtual buffer pool into the simulated buffer pool.

sync-io-delay
The total time in milliseconds that the buffer pool simulation determined would be spent waiting for synchronous read I/O from disk.

DSNB440I: Parallel activity statistics

When you specify the DETAIL option, the output includes statistics about parallel activities for the buffer pool.

```
DSNB440I - PARALLEL ACTIVITY -
           PARALLEL REQUEST  =        tpa   DEGRADED PARALLEL =       dpa
```

PARALLEL REQUEST = *tpa*
The total number of negotiations with the buffer pool for the requested number of sequential prefetch streams.

DEGRADED PARALLEL = *dpa*
The total number of times that the negotiation resulted in the degraded mode of parallel operations.

DSNB441I: LPL activity statistics

When you specify the DETAIL option, the output includes statistics about LPL activity for the buffer pool.

```
DSNB441I - LPL ACTIVITY -
           PAGES ADDED       =        pages
```

pages
The total number of pages for all page sets that are added to the logical page list (LPL) in this buffer pool. This value is equal to the number of DSNB250E messages that are written to the system log after the most recent execution of the DISPLAY BUFFERPOOL command with the DETAIL option.

Related information

DSNB250E (Db2 Messages)
Displaying the logical page list (Db2 Administration Guide)
Characteristics of pages that are in error (Db2 Administration Guide)

DSNB453I: Cached and changed page statistics

The output includes the number of cached pages and changed pages in the buffer pool for a data set if all of the following conditions are true:

- You specified the LSTATS option on the DISPLAY BUFFERPOOL command.
- The buffer pool is an active buffer pool.
- The number of cached and changed pages are not zero.

The relevant table space or index space is identified in either line DSNB464I or line DSNB465I. The data set is identified in line DSNB466I.

```
DSNB453I - VP CACHED PAGES -
           CURRENT       =        vcount   MAX           =        mvcount
           CHANGED       =        ccount   MAX           =        mccount
```

CURRENT = *vcount*
The number of cached pages in the virtual pool for the data set. This value is the number of buffers that contain pages for the data set in the buffer pool.

MAX = *mvcount*
The maximum number of cached pages in the virtual pool for the data set since the last DISPLAY BUFFERPOOL command with the LSTATS option was issued.

CHANGED = *ccount*
The number of changed pages in the virtual pool for the data set. This value is the number of buffers that were changed in the buffer pool for the data set.

MAX = *mccount*
The maximum number of changed pages in the virtual pool for the data set since the last DISPLAY BUFFERPOOL command with the LSTATS option was issued.

DSNB455I: Synchronous I/O delay statistics

The output includes synchronous I/O delay statistics if all of the following conditions are true:

- You specified the LSTATS option on the DISPLAY BUFFERPOOL command.
- The buffer pool is an active buffer pool.
- The values of the synchronous I/O delay statistics are not zero.

These synchronous I/O delay statistics are reported for a data set for an open table space or index space that is associated with the buffer pool. The values that are listed are the statistics that were gathered since the last display for the data set.

Note: There are two sections to report synchronous I/O delays. The SYNCHRONOUS I/O DELAYS section shows statistics for all I/Os. The SYNCHRONOUS I/O DELAYS WITH ZHYPERLINK section show statistics only for those requests which used zHyperlink.

The relevant table space or index space is identified in either line DSNB464I or line DSNB465I. The relative data set within the table space or index space is identified in line DSNB466I.

```
DSNB455I - SYNCHRONOUS I/O DELAYS -
             AVERAGE DELAY         = avd
             MAXIMUM DELAY         = mxd
             TOTAL PAGES           = tpg
```

avd
The average I/O delay in microseconds for pages in the data set.

mxd
The maximum I/O delay in microseconds for pages in the data set.

tpg
The total number of pages that are read or written for the data set.

```
SYNCHRONOUS I/O DELAYS WITH ZHYPERLINK -
             AVERAGE DELAY         = avdz
             MAXIMUM DELAY         = mxdz
             TOTAL PAGES           = tpgz
```

avdz
The average I/O delay in microseconds for pages in the data set when zHyperLink is used.

mxdz
The maximum I/O delay in microseconds for pages in the data set when zHyperLink is used.

tpgz
The total number of pages that are read or written for the data set when zHyperLink is used.

Related information

Read operations and prefetch I/O (Db2 Performance)

DSNB456I: Asynchronous I/O delay statistics

The output includes asynchronous I/O delay statistics if all of the following conditions are true:

- You specified the LSTATS option on the DISPLAY BUFFERPOOL command.
- The buffer pool is an active buffer pool.
- The values of the asynchronous I/O delay statistics are not zero.

These asynchronous I/O delay statistics are reported for a data set for an open table space or index space that is associated with the buffer pool. The values that are listed are the statistics that were gathered since the last display for the data set.

The relevant table space or index space is identified in either line DSNB464I or line DSNB465I. The relative data set within the table space or index space is identified in line DSNB466I.

```
DSNB456I - ASYNCHRONOUS I/O DELAYS -
             AVERAGE DELAY         = avd
             MAXIMUM DELAY         = mxd
             TOTAL PAGES           = tpg
             TOTAL I/O COUNT       = tio
```

avd
The average I/O delay in microseconds for pages in the data set.

mxd
The maximum I/O delay in microseconds for pages in the data set.

tpg
The total number of pages that are read or written for the data set.

tpg
The total number of I/O operations that are issued for the data set.

DSNB457I: Simulated buffer pool page statistics

The output includes the number of simulated pages in the simulated buffer pool for a data set if all of the following conditions are true:

- You specified the LSTATS option on the DISPLAY BUFFERPOOL command.
- The buffer pool is an active buffer pool.
- The number of simulated pages in the simulated buffer pool is not zero.

The relevant table space or index space is identified in either line DSNB464I or line DSNB465I. The data set is identified in line DSNB466I.

```
DSNB457I - NUMBER OF PAGES IN THE SIMULATED BUFFER POOL -
           CURRENT       =        scount   MAX           =        mscount
```

CURRENT = *scount*
The number of pages from the data set that are currently simulated in the simulated buffer pool.

MAX = *mscount*
The maximum number of pages from the data set that have been simulated in the simulated buffer pool since the last DISPLAY BUFFERPOOL command with the LSTATS option was issued.

DSNB459I: Open failure for a data set

Message DSNB459I indicates that a previous attempt to access a data set failed because of an allocation or open error. This message is displayed only when you specify the LIST option on the DISPLAY BUFFERPOOL command for an active buffer pool and this error condition occurs.

The relevant table space or index space is identified in either line DSNB464I or line DSNB465I.

```
DSNB459I - csect-name OPEN FAILURE HAS OCCURRED FOR DATASET dsn
```

csect-name
The name of the control section that issued the message.

DATASET = *dsn*
The data set number. This value is the relative data set number within a table space or index space.

Other data set and buffer pool information might be displayed in subsequent messages.

DSNB460I: Page set and partition list information (for a data-sharing environment)

When you specify the LIST option, the output includes information about page sets and partition lists.

The message output begins with the introductory text `PAGE SET/PARTITION LIST INFORMATION`. The introductory text is followed by column headers and multiple lines of information.

```
DSNB460I  @
----------------PAGE SET/PARTITION LIST INFORMATION----------------
                                   --------DATA SHARING INFO--------
                                TS GBP  MEMBER  CASTOUT  USE  P-LOCK
DATABASE SPACE NAME  INST PART IX DEP   NAME    OWNER  COUNT STATE
======== =========== ==== ==== == === ======== ======= ===== ======
```

The output contains the following columns, in the indicated order:

DATABASE
The name of the database. This field is blank when the line provides information about the same database as the preceding line or lines.

SPACE NAME
The name of the table space. This field is blank when the line provides information about the same table space as the preceding line or lines.

INST
The instance number.

PART
One of the following values:

- The partition number.
- For a simple table space or simple index space: a blank.
- For non-partitioned indexes on a partitioned table space: the logical partition number preceded by the character L (for example, L01).

TS IX
The type of object: either TS for table space or IX for index space.

GBP DEP
An indicator of group buffer pool (GBP) dependency. The indicator can be either of the following values:

Y
The page set or partition is GBP-dependent.

N
The page set or partition is not GBP-dependent.

MEMBER NAME
The name of the member that the detail line pertains to.

CASTOUT OWNER
An indicator of whether the member is the castout owner. The indicator can be either of the following values:

Y
The member is the castout owner.

Blank
The member is not the castout owner.

USE COUNT
The number of active claimers or drainers for the page set or partition for the member.

P-LOCK STATE
The P-lock state that the member currently holds. The state can be any of the following values:

IS
R/O interest. Other members have interest in this page set or partition. The page set or partition is GBP-dependent.

IX
R/W interest. Other members have interest in this page set or partition. The page set or partition is GBP-dependent.

S
R/O interest. Other members might be reading the page set or partition. The page set or partition is not GBP-dependent.

SIX
R/W interest. Other members might be reading the page set or partition. The page set or partition is GBP-dependent.

NSU
R/W interest. The page set or partition is GBP-dependent.

X
R/W interest. No other members are accessing the page set or partition. The page set or partition is not GBP-dependent.

US
A temporary state that can be held by a restarting Db2 when "waiting for retained locks" is enabled.

number
A number for use as a diagnostic aid. A number is displayed only when a DISPLAY BUFFERPOOL command encounters an undefined lock state.

If the DISPLAY BUFFERPOOL LIST command finds more than 255 lines of output to display, the output is presented in multiple sections. Each section is a new instance of message DSNB460I with the addition of "(CONTINUED)" in the message heading:

```
DSNB460I  @ (CONTINUED)
```

Message DSNB460I is issued in a data-sharing environment. In a non-data-sharing environment, message DSNB464I is issued instead.

If no information is available, message DSNB460I is followed by message DSNB463I.

DSNB463I: No objects matched selection criteria

Message DSNB463I indicates that Db2 did not find any page sets or partitions that matched the selection criteria.

```
DSNB463I - * * * NO OBJECTS MATCHED LIST/LSTATS SELECTION CRITERIA
```

For example, this message is displayed for DIS BPOOL(BP0) GBPDEP(Y) if Db2 did not find any page sets or partitions that are group-buffer-pool dependent (GBP-dependent).

When message DSNB463I is returned, the DISPLAY BUFFERPOOL command terminates normally.

If you expected to see a list of page sets or partitions, review and correct the syntax of the DISPLAY BUFFERPOOL command as needed. Consider adding or changing the filter keywords to obtain a list of page sets or partitions.

DSNB464I: Page set and partition list information (for a non-data-sharing environment)

When you specify the LIST option, the output includes information about page sets and partition lists.

The message output begins with the introductory text `PAGE SET/PARTITION LIST INFORMATION`. The introductory text is followed by column headers and multiple lines of information.

```
DSNB464I  @
PAGE SET/PARTITION LIST INFORMATION
                                TS  USE
DATABASE SPACE NAME  INST PART IX COUNT
======== =========== ==== ==== == =====
```

DATABASE
: The name of the database. This field is blank when the line provides information about the same database as the preceding line or lines.

SPACE NAME
: The name of the table space. This field is blank when the line provides information about the same table space as the preceding line or lines.

INST
: The instance number.

PART
: One of the following values:

- The partition number.
- For a simple table space or simple index space, a blank.
- For non-partitioned indexes on a partitioned table space, the logical partition number preceded by the character L (for example, L01).

TS IX
: The type of object: either TS for table space or IX for index space.

USE COUNT
: The number of active claimers or drainers for the page set or partition for the member.

If the DISPLAY BUFFERPOOL LIST command finds more than 255 lines of output to display, the output is presented in multiple sections. Each section is a new instance of message DSNB464I with the addition of "(CONTINUED)" in the message heading:

```
DSNB464I  @ (CONTINUED)
```

Message DSNB464I is issued in a non-data-sharing environment. In a data-sharing environment, message DSNB460I is issued instead.

If no information is available, message DSNB464I is followed by message DSNB463I.

DSNB466I: Page set and partition statistics

When you specify the LSTATS option, the output includes statistics for data sets. Those statistics are introduced by message DSNB466I.

DSNB467I: Data set statistics

When you specify the LSTATS option, the output includes statistics about data sets for objects that are associated with active buffer pools.

```
DSNB467I - STATISTICS FOR object-type database-name.space-name INSTANCE instance-number -
DATA SET #: set-number USE COUNT: application-count
```

STATISTICS FOR *object-type*
The type of object: either TABLE SPACE or INDEX SPACE.

database-name
The name of the database.

space-name
The name of the table space or index space.

instance-number
The instance number of the table space or index space.

DATA SET #: *set-number*
The relative data set number within the table space or index space.

USE COUNT: *application-count*
The number of applications that have a claim or drain on the page set or partition.

This message is followed by one or more of the following messages: DSNB453I, DSNB455I, or DSNB456I.

Related information

Claims and drains (Db2 Performance)

DSNB546I: Frame size allocation

Message DSNB546I describes the frame size allocation status of the buffer pool. If the specified number of buffers with the specified frame size are not available, Db2 allocates some of the buffers with a different frame size. In that case, Db2 issues multiple instances of this message to show the number of buffers that are allocated with each frame size.

```
DSNB546I - PREFERRED FRAME SIZE preferred-size buffer-count BUFFERS USING frame-size FRAME SIZE
ALLOCATED
```

preferred-size
The requested frame size. If you used the ALTER BUFFERPOOL command with the FRAMESIZE option, the specified FRAMESIZE value is displayed as *preferred-size*.

This value can be 4K, 1M, or 2 GB.

buffer-count
The number of buffers that are allocated with the *frame-size* value. This value might include storage frames that have been logically removed from the buffer pool, but which Db2 cannot yet free.

frame-size
The actual frame size that Db2 used for the buffers.

This value can be 4K, 1M, or 2 GB.

DSNB550I: Page stealing method change

Message DSNB550I is displayed only after a buffer pool is allocated for which the requested FRAMESIZE and PGSTEAL values are FRAMESIZE(2G) and PGSTEAL(NONE).

```
DSNB550I - CURRENT PAGE STEALING METHOD = NONE
           PAGE STEALING METHOD BEING USED = LRU
```

PGSTEAL(NONE) and FRAMESIZE(2G) are not compatible in Db2 12. If you specify these options together, Db2 issues message DSNB549I and uses the PGSTEAL(LRU) algorithm until the next allocation of the buffer

pool. However, PGSTEAL(NONE) is recorded in the BSDS. To use PGSTEAL(NONE), specify FRAMESIZE(1M) or FRAMESIZE(4K). For more information, see "Changed behavior for PGSTEAL(NONE) buffer pools" in Storage release incompatibilities in Db2 12 (Db2 for z/OS What's New?).

DSN9022I: Normal completion

The DISPLAY THREAD output normally ends with message DSN9022I.

Related information

DSN9022I (Db2 Messages)

DSNB499I: Display terminated because of insufficient space

If the DISPLAY BUFFERPOOL output is too long, the output ends with message DSNB499I. This message indicates that the command was unable to obtain storage for more messages. This situation occurs only for a long display request, such as a detail display for many buffer pools.

The output is truncated.

Reissue the DISPLAY BUFFERPOOL command, and specify a smaller number of buffer pools.

System action

Processing continues.

Related tasks

Monitoring buffer pools (Db2 Administration Guide)

Monitoring and tuning buffer pools by using online commands (Db2 Performance)

Related reference

-DISPLAY BUFFERPOOL command (Db2)
The Db2 command DISPLAY BUFFERPOOL displays the current status for one or more active or inactive buffer pools.

-ALTER BUFFERPOOL command (Db2)
The Db2 command ALTER BUFFERPOOL alters attributes for active or inactive buffer pools. Altered values are used until altered again.

Chapter 22. -DISPLAY DATABASE command (Db2)

The Db2 command DISPLAY DATABASE displays status information about Db2 databases.

The DISPLAY DATABASE command displays information about the status of the following objects:

- Db2 databases
- Table spaces
- Tables in segmented table spaces
- XML table spaces
- LOB table spaces
- Index spaces within a database
- Indexes on auxiliary tables
- Partitions of partitioned table spaces
- Partitions of index spaces

DISPLAY DATABASE RESTRICT indicates if a table space, index space, or partition is in any pending status. Use the ADVISORY option without the RESTRICT option to display any objects that are in an advisory pending status, such as the informational COPY-pending status or auxiliary warning advisory status.

In a data sharing environment, the command can be issued from any Db2 subsystem in the group that has access to the database.

Abbreviation: -DIS DB

Environment

This command can be issued from a z/OS console, a DSN session under TSO, a DB2I panel (DB2 COMMANDS), an IMS or CICS terminal, or a program using the instrumentation facility interface (IFI).

Data sharing scope: Group

Authorization

The DISPLAY privilege allows you to display status information for any database. The resulting display lists those databases for which the primary authorization ID or any of the secondary authorization IDs has the DISPLAYDB privilege. Error messages are produced for those databases specified over which the set of privileges does not include one of the following privileges or authorities:

- DISPLAYDB privilege
- DISPLAY privilege
- DBMAINT authority
- DBCTRL authority
- DBADM authority
- System DBADM authority
- SYSOPR authority
- SYSCTRL authority
- SYSADM authority

For implicitly created databases, the database privilege or authority can be held on the implicitly created database or on DSNDB04. If the DISPLAY DATABASE command is issued on specific table spaces or index spaces in an implicitly created database, ownership of the table spaces is sufficient to display status

© Copyright IBM Corp. 1983, 2024

information about them. This means that the owner can display information about an implicitly created table space or index space if the command explicitly specifies that table space or index space name.

Db2 commands that are issued from a logged-on z/OS console or TSO SDSF can be checked by Db2 authorization using primary and secondary authorization IDs. A logged-on z/OS user ID must be defined in RACF or a similar security server.

Syntax

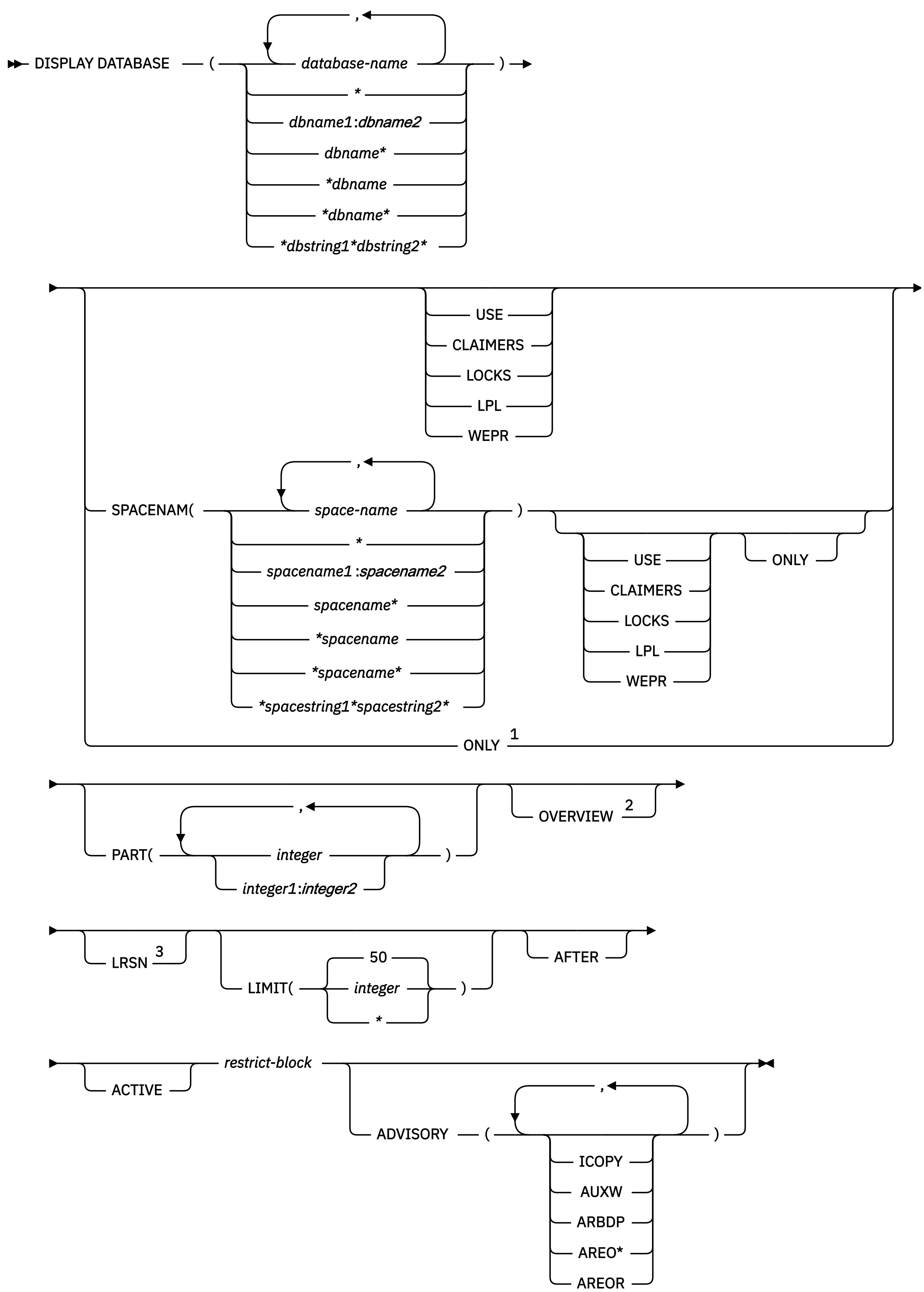

Notes:

[1] If you specify the ONLY option without the SPACENAM() keyword, only the LIMIT, AFTER, and RESTRICT keywords apply.
[2] The OVERVIEW keyword cannot be specified with any other keywords except SPACENAM, LIMIT, and AFTER.
[3] The LRSN keyword cannot be specified with any other keywords except SPACENAM and PART. Use the LRSN keyword only under the direction of IBM Support.

restrict block:

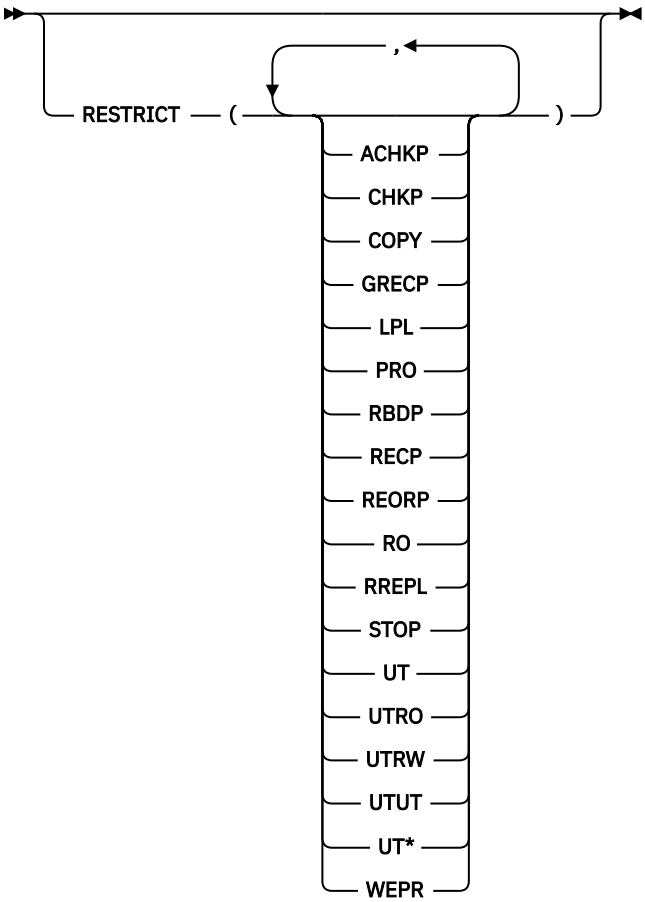

Option descriptions

(*database-name*)
Identifies one or more databases whose status is to be displayed. The following variations are accepted:

(database-name, ...)
Identifies one or more database names, separated by commas or blanks.

(*)
All databases that are defined to the Db2 subsystem for which the privilege set of the process has the required authorization.

(*dbname1*:*dbname2*)
All databases whose names, in UNICODE, are between *dbname1* and *dbname2* inclusive.

(*dbname)**
All databases whose names begin with the string *dbname* that contains 1–7 characters.

(*dbname*)
All databases whose names end with the string *dbname* that contains 1–7 characters.

(*dbname)**
All databases whose names contain the string *dbname*,where *dbname* that contains 1–6 characters.

(*dbstring1*dbstring2)**
All databases whose names contain the strings *dbstring1* and *dbstring2* that together contain a total of 2–5 characters.

SPACENAM
Specifies what space to display. If you use SPACENAM, you must also specify the corresponding database name. If (*) is used to specify multiple databases, SPACENAM(*) can be specified to display all objects in these databases.

Abbreviation: SPACE, SP

(spacename, ...)
One ore more index space names, separated by commas or blanks.

(*)
All table spaces or index spaces that are defined to the Db2 subsystem for which the privilege set of the process has the required authorization.

(*spacename1*:*spacename2*)
All table spaces or index spaces whose names, in UNICODE, are between *spacename1* and *spacename2* inclusive

(*spacename)**
All table spaces or index spaces whose names begin with the string *spacename* that contains 1–7 characters.

(spacename*)**
All table spaces or index spaces whose names end with the string *spacename* that contains 1–7 characters.

(spacename**)**
All table spaces or index spaces whose names contain the string *spacename* that contains 1–6 characters.

(spacestring1*spacestring2**)**
All table spaces or index spaces whose names contain the strings *spacestring1* and *spacestring2* that together contain a total of 2–5 characters.

USE
Displays the following information:

- The applications and subsystems of the database or space that have internal Db2 resources allocated
- The applications and subsystems of the database or space on whose behalf locks for the space are held or waited for
- The connection IDs, correlation IDs, and authorization IDs for all applications allocated to spaces and partitions whose statuses are displayed
- The LUWID and location of any remote threads accessing the local database

CLAIMERS
Displays the following information:

- The claims on all table spaces, index spaces and partitions whose statuses are displayed
- The LUWID and location of any remote threads accessing the local database
- The connection IDs, correlation IDs, and authorization IDs for all applications allocated to spaces whose statuses are displayed
- The logical partitions that have logical claims and their associated claims

- The agent token for the claimer, if the claimer is local

CLAIMERS overrides both LOCKS and USE. If you specify CLAIMERS, any references to LOCKS or USE are ignored.

LOCKS
Displays the following information:

- The applications and subsystems on whose behalf locks are held, waited on, or retained for the database or space
- The transaction locks for all table spaces, tables, index spaces and partitions whose statuses are displayed
- The connection IDs, correlation IDs, and authorization IDs for all applications allocated to spaces whose statuses are displayed
- The LUWID and location of any remote threads accessing the local database
- The drain locks for a resource held by running jobs
- The logical partitions that have drain locks and the drain locks that are associated with them
- The retained locks for a resource
- The page set or partition physical locks (P-locks) for a resource
- The agent token for the lock holder, if the lock holder is local

LOCKS overrides USE. If both LOCKS and USE are specified, USE is ignored.

LPL
Displays logical page list entries.

WEPR
Displays write error page range information.

ONLY
Displays information about the specified object.

without SPACENAM() keyword
Displays only database information. Db2 does not display information for the spaces within the database you specified with the DISPLAY DATABASE command. If you specify ONLY, the following keywords are valid:

- RESTRICT
- LIMIT
- AFTER

with SPACENAM() keyword
Displays the table spaces or indexes that have information requested by the DISPLAY DATABASE command. If you specify SPACENAM() ONLY, you must also specify one of the following keywords:

- USE
- CLAIMERS
- LOCKS
- LPL
- WEPR

Db2 displays tables with table locks when you specify both the LOCKS and ONLY keywords.

PART (*integer* , ...)
Indicates the partition number of one or more partitions whose status is to be displayed. The *integer* specified must identify a valid partition number for the corresponding space name and database name. *integer* can be written to designate one of the following values:

- A list of one or more partitions

- A range of all partition numbers that collate greater than or equal to *integer1* and less than or equal to *integer2*
- A combination of lists and ranges

OVERVIEW

Displays each object in the database on its own line, providing an easy way to see all objects in the database.

OVERVIEW limits the display to only the space names and space types that exist in the specified databases. The number of parts is displayed for any partitioned spaces.

The OVERVIEW keyword cannot be specified with any other keywords except SPACENAM, LIMIT, and AFTER.

LIMIT

Limits the number of messages to be displayed by the command.

(*integer*)

Is the maximum number of messages that are to be displayed. The **default** is 50 . The maximum number of messages that can be displayed is limited by the space available.

(*)

Limits the display to the space available.

AFTER

Displays the following information:

- If only a database name is used, AFTER continues the display of all other databases whose names collate greater than that name.
- If SPACENAM and a table space or index space name are used, AFTER continues the display to all other table spaces or index spaces in the same database whose names collate greater than that name.

AFTER cannot be used with more than one database name, table space name, or index space name, or with any pattern-matching character (*) within a database name, table space name, or index space name.

ACTIVE

Limits the display to table spaces or index spaces that have had internal Db2 resources allocated to applications and are in a started state or to databases that contain such spaces.

Abbreviation: A

Default: Using neither ACTIVE nor RESTRICT displays information on all databases defined to Db2.

RESTRICT

Limits the display to databases, table spaces, or indexes in a restricted status. This includes those page sets that have logical page list entries. Specifying one or more keywords further limits the display to the named objects only.

Abbreviation: RES

Use of a database is restricted if the database is in any of the following situations:

- It is started for read-only processing.
- It is started for read-or-replication-only processing.
- It is started for utility-only processing.
- It is stopped.

Use of a table space or index space is restricted if the table space or index space is in any of the following situations:

- It is in one of the three situations listed previously.
- It is being processed by a utility.

- It is in COPY-pending, CHECK-pending, RECOVER-pending, group buffer pool RECOVER-pending, auxiliary CHECK-pending, or REORG-pending status.
- It contains a page error range.
- It contains pages in the logical page list (LPL).

Specify one or more of the following keywords to limit objects that are to be listed.

ACHKP
Displays objects in the auxiliary warning advisory status.

CHKP
Display objects that are in CHECK-pending status.

COPY
Display objects that are in COPY-pending status.

GRECP
Displays objects that are in group buffer pool RECOVER-pending status.

LPL
Displays logical page list entries.

PRO
Displays table space partitions that are in Persistent Read Only (PRO) restricted status.

RBDP
Displays index objects that are in REBUILD- or RECOVER-pending status. This includes the restricted statuses RBDP, RBDP*, PSRBDP, LPL, and WEPR.

RECP
Displays objects that are in RECOVER-pending status, including the restricted status RECP, RECP*, LPL, and WEPR (write error page range).

REORP
Displays objects that are in REORG-pending status.

RO
Displays objects that are in read-only mode.

RREPL
Displays objects that are in read-or-replication-only mode.

STOP
Displays objects that are stopped, including the restricted statuses STOP, STOPE, STOPP, and LSTOP.

UT
Displays objects that are in utility access mode.

UTRO
Display objects that are serialized for utility access and available for read-only access.

UTRW
Display objects that are serialized for utility access and available for read-write access.

UTUT
Displays objects that are serialized for utility access and unavailable.

UT*
Displays objects that are in any utility access mode: UT, UTRW, UTRO, or UTUT.

WEPR
Displays write error page range information.

ADVISORY
Limits the display to indexes and table spaces to which read-write access is allowed, but for which some action is recommended.

Abbreviation: ADV

Use the DISPLAY DATABASE ADVISORY command without the RESTRICT option to determine when:

- An index space is in the informational COPY-pending (ICOPY) advisory status.
- A base table space or LOB table space is in the auxiliary warning (AUXW) advisory status.
- An index space is in the REBUILD-pending (ARBDP) advisory status.
- An index space is in the REORG (AREO*) advisory status.
- A table space or an index space is in the REORG(AREOR) advisory status.

Specify one or more of the following keywords to limit the objects listed.

AUXW
Displays objects that are in the auxiliary warning advisory status.

ICOPY
Displays objects that are in the informational COPY-pending advisory status.

ARBDP
Displays objects that are in the advisory REBUILD-pending status.

AREO*
Displays objects that are in the advisory REORG-pending status.

AREOR
Displays objects that are in the advisory REORG-pending status.

LRSN
Use the LRSN option only under the direction of IBM Support. See Db2 commands for troubleshooting (Diagnosing Db2 problems) for details.

Usage notes

Displaying Db2 catalog tables
You can always display the Db2 catalog tables. However, if a table space in the catalog containing information about user databases or user table spaces is stopped, those databases or table spaces cannot be displayed. Trying to display them will cause an error.

If you issue DISPLAY DATABASE LOCKS on the catalog (DSNDB06), you might see a lock held on SYSTSTSP with the correlation ID 020.DBCMD_06 or 020.DBCMD_07. This information indicates the lock that DISPLAY DATABASE itself needs and is normal.

Displaying restricted and advisory status objects
To display all resources that are in restricted status, you must issue the DISPLAY DATABASE command twice. To display table spaces and indexes in restricted status, use the SPACENAM parameter with RESTRICT. To display databases in restricted status, do **not** use the SPACENAM parameter. Spaces could be unavailable even if they show RW mode if the database is in restricted status.

To display all resources that are in advisory status, issue the DISPLAY DATABASE ADVISORY command without the RESTRICT option.

Communications Database and Resource Limit Facility:
If the command specifies a table space or index space in the communications database or in the active resource limit facility database, the USE option displays the names of all members of the data sharing group that are using the specified table space or index space. Knowing which other members of the data sharing group might be using these spaces is useful when considering whether to drop table spaces and index spaces in the communications database and the resource limit facility database.

Displaying logical partitions:
If you issue DISPLAY DATABASE with the PART parameter for a logical partition of a type 2 index, Db2 does not display physical claimers and physical locks in the output. Nonpartitioned indexes are displayed with a type of 'IX' and with partition numbers displayed either as 'L' followed by a four-digit number, or as 'L*.' When the information for all the logical partitions is the same, partition numbers are displayed as 'L*.' If there is unique information to be displayed for a particular logical partition, L is used with that partition number to represent the logical part.

Displaying databases for declared temporary tables

DISPLAY DATABASE can display information about databases that are created with the AS TEMP option and the associated table spaces, but does not display information for declared temporary tables or index spaces that the database contains.

Displaying data-partitioned secondary indexes (DPSIs)

DISPLAY DATABASE can display information about data-partitioned secondary indexes. DPSIs are displayed with a type of 'IX'. The partition number is displayed as 'D' followed by the four-digit partition number, ranging from 0001 to 4096.

Displaying XML table spaces

DISPLAY DATABASE can display information about the status of XML table spaces. XML table spaces are displayed with a type of 'XS'.

Displaying clone table information

The information about base table objects and their clones is automatically displayed if a clone table exists. The information for both base objects and clones is displayed because clone objects can have different states than their base counterparts. DISPLAY indicates the current base and clone data set instance numbers.

Base table objects that have been cloned are noted with the character 'B' in the TYPE column of the DISPLAY output. Cloned objects are noted with the character 'C' in the TYPE column. Immediately following the 'B' or 'C' character is the data set instance number. The data set number is always a '1' or '2'. All the base table objects have the same data set instance number. All of the clone table objects have the same instance number, which is different than the base table objects' instance number. Data set instance number associations change during each data exchange.

You can also query the INSTANCE column of the SYSTABLESPACE catalog table to determine the current instance number associated with a particular base table.

If you drop a cloned table of a base table with a instance number '2' then the DISPLAY output of the base table still indicates that a clone once existed. The DISPLAY command output still shows 'B2' in the TYPE column to indicate that the base object is using instance number '2'. If you drop a cloned table and the base object instance number is '1' then the DISPLAY command outputs information that does not indicate that a clone ever existed. There is no 'B' character or instance number in the TYPE column.

Trace information for data sharing members

When this command with group scope is issued in a Db2 data sharing member, it also runs on all other active members. IFICID 090 trace records for other group members can show that the same command was issued by the SYSOPR authorization ID from the 016.TLPKN5F correlation ID, in addition to the trace records from the member where the original command was issued. See Command scope in Db2 data sharing (Db2 Data Sharing Planning and Administration).

Output

Message DSNT361I (Db2 Messages) indicates the beginning of the output of the command.

Examples

Example: Displaying information about a single table space

The following command displays information about table space TBS33 in database CB3. The USE option causes *connection-name* (CONNID), *correlation-id* (CORRID), and *authorization-ID* (USERID) information to be displayed.

```
-DISPLAY DATABASE(CB3) SPACENAM(TBS33) USE
```

The output is similar to this output:

```
DSNT360I - ***********************************************************
DSNT361I - *  DISPLAY DATABASE SUMMARY
           *    GLOBAL USE
```

```
DSNT360I - ***********************************************************
DSNT362I -     DATABASE = CB3  STATUS = RW
               DBD LENGTH = 4028
DSNT397I -
NAME     TYPE PART  STATUS            CONNID   CORRID       USERID
-------- ---- ----- ----------------- -------- ------------ --------
TBS33    TS    0001 RW                LSS001   DSN2SQL      SYSADM
    -THRU      0004
TBS33    TS

******* DISPLAY OF DATABASE CB3      ENDED      **********************
DSN9022I . DSNTDDIS 'DISPLAY DATABASE' NORMAL COMPLETION
```

Example: Display information about database locks

The following command display information about table space TBS33 in database CB3. The LOCKS option displays lock information for table spaces and tables specified; LUWIDs and locations of any remote threads; and *connection-name*, *correlation-id*, and *authorization ID* information.

```
-DISPLAY DATABASE(CB3) SPACENAM(TBS33) LOCKS
```

The output is similar to this output:

```
DSNT360I - ***********************************************************
DSNT361I - *  DISPLAY DATABASE SUMMARY
           *    GLOBAL LOCKS
DSNT360I - ***********************************************************
DSNT362I -     DATABASE = CB3  STATUS = RW
               DBD LENGTH = 4028
DSNT397I -
NAME     TYPE PART  STATUS            CONNID   CORRID       LOCKINFO
-------- ---- ----- ----------------- -------- ------------ ---------
TBS33    TS    0001 RW
    -THRU      0003
TBS33    TS    0004 RW                LSS004   DSN2SQL      H-IS,S,C
TBS33    TS    0004 RW                LSS005   DSN2SQL      H-IS,S,C
TBS33    TS
******* DISPLAY OF DATABASE CB3      ENDED      **********************
```

Example: Displaying information about claimers

The following command displays information about table space TBS33 in database CB3. The CLAIMERS option displays claim types and durations; LUWIDs and locations of any remote threads; and *connection-name*, *correlation-id*, and *authorization ID* information.

```
-DISPLAY DATABASE(CB3) SPACENAM(TBS33) CLAIMERS
```

The output is similar to this output:

```
DSNT360I - ***********************************************************
DSNT361I - *  DISPLAY DATABASE SUMMARY
           *    GLOBAL CLAIMERS
DSNT360I - ***********************************************************
DSNT362I -     DATABASE = CB3  STATUS = RW
               DBD LENGTH = 4028
DSNT397I -
NAME     TYPE PART  STATUS            CONNID   CORRID      CLAIMINFO
-------- ---- ----- ----------------- -------- ------------ --------
TBS33    TS    0001 RW
    -THRU      0003
TBS33    TS    0004 RW                LSS001   DSN2SQL      (RR,C)
TBS33    TS    0004 RW                LSS001   DSN2SQL      (WR,C)
TBS33    TS
******* DISPLAY OF DATABASE CB3      ENDED    *********************
```

Example: Displaying information about locks in a data sharing environment

The following command displays information about locks that are held for a table space. The database is in a data sharing environment. The application that is identified as LSS001 on member DB1G has locked partitions 1 and 2. LSS002 on member DB2G has locked partitions 1 and 3. Partition 4 has no locks held on it.

```
-DISPLAY DATABASE(DSN8D12A) SPACENAM(TSPART) LOCKS
```

The output is similar to this output:

```
NAME     TYPE PART  STATUS            CONNID   CORRID       LOCKINFO
-------- ---- ----- ----------------- -------- ------------ ---------
TSPART   TS    0001 RO                LSS001   DSN2SQL      H-IS,P,C
     -                   MEMBER NAME DB1G
TSPART   TS    0001 RO                                      H-S,PP,I
     -                   MEMBER NAME DB1G
TSPART   TS    0001 RO                LSS002   DSN2SQL      H-IS,P,C
     -                   MEMBER NAME DB2G
TSPART   TS    0001 RO                                      H-S,PP,I
     -                   MEMBER NAME DB2G
TSPART   TS    0002 RW                LSS001   DSN2SQL      H-IS,P,C
     -                   MEMBER NAME DB1G
TSPART   TS    0002 RW                                      H-S,PP,I
     -                   MEMBER NAME DB1G
TSPART   TS    0003 RW                LSS002   DSN2SQL      H-IS,P,C
     -                   MEMBER NAME DB2G
TSPART   TS    0003 RW                                      H-S,PP,I
     -                   MEMBER NAME DB2G
TSPART   TS    0004 RW
TSPART   TS
```

If Db2 cannot selectively lock the partitions, it must lock all of the partitions and the display looks similar to the following output. The LOCKINFO field shows a value of S, indicating that this is a table space lock. If partitions are held in different statuses, those statuses are listed below the table space locks.

```
NAME     TYPE PART  STATUS            CONNID   CORRID       LOCKINFO
-------- ---- ----- ----------------- -------- ------------ ---------
TSPART   TS                           LSS001   DSN2SQL      H-IS,S,C
     -                   MEMBER NAME DB1G
TSPART   TS                           LSS002   DSN2SQL      H-IS,S,C
     -                   MEMBER NAME DB2G
TSPART   TS    0001 RO                                      H-S,PP,I
     -                   MEMBER NAME DB1G
TSPART   TS    0002 RW                                      H-S,PP,I
     -                   MEMBER NAME DB2G
TSPART   TS    0003 RW                                      H-S,PP,I
     -                   MEMBER NAME DB2G
TSPART   TS    0004 RW
TSPART   TS
```

Example: Displaying information about table spaces with entries in the logical page list

The following command displays information about table spaces in database DSNDB01 that have entries in the logical page list. The LIMIT parameter limits the number of messages displayed to the space available.

```
-DB1G DISPLAY DATABASE(DSNDB01) SPACENAM(*) LIMIT(*) LPL
```

The output is similar to this output:

```
************************************************************
DSNT361I -DB1G *  DISPLAY DATABASE SUMMARY
               *    GLOBAL LPL
DSNT360I -DB1G
************************************************************
DSNT362I -DB1G    DATABASE = DSNDB01  STATUS = RW
               DBD LENGTH = 8000
DSNT397I -DB1G
NAME     TYPE PART  STATUS            LPL PAGES
-------- ---- ----- ----------------- ------------------
DBD01    TS         RW,LPL,GRECP      000001,000004,00000C,000010
----                                  000039-00003C
BP1TS    TS         RW, LPL           00000002
SPT01    TS         RW
SCT02    TS         RW
SYSLGRNG TS         RW
SYSUTILX TS         RW
SYSLGRNX TS         RW,LPL,GRECP      000000-FFFFFF
DSNSCT02 IX         RW
DSNSPT01 IX         RW
DSNSPT02 IX         RW
```

```
DSNLUX01 IX         RW
DSNLUX02 IX         RW
DSNLLX01 IX         RW
DSNLLX02 IX         RW
******* DISPLAY OF DATABASE DSNDB01  ENDED      **********************
DSN9022I -DB1G DSNTDDIS 'DISPLAY DATABASE' NORMAL COMPLETION
```

Example: Displaying lock information for partitions in a table space when Db2 cannot do selective partition locking

Suppose that Db2 is unable to selectively lock the partitions of table space TSPART, which is in database DSN8D12A. When you specify the following command, two applications are accessing TSPART, and the partitions have different statuses.

```
-DB1G DISPLAY DATABASE(DSN8D12A) SPACE(TSPART) PART(1,4) LOCKS
```

Db2 displays the locks as table space locks, as shown in the following output:

```
NAME     TYPE PART  STATUS            CONNID   CORRID       LOCKINFO
-------- ---- ----- ----------------- -------- ------------ ---------
TSPART   TS                           LSS001   DSN2SQL      H-IS,S,C
TSPART   TS                           LSS002   DSN2SQL      H-IS,S,C
TSPART   TS    0001 RO
TSPART   TS    0004 RW
```

Example: Displaying lock information for partitions in a table space when Db2 can do selective partition locking

Suppose that you have executed the ALTER TABLESPACE statement on table space TSPART so that TSPART is now defined with LOCKPART YES. LOCKPART YES causes Db2 to do selective partition locking on TSPART. When you issue the following command, two applications are accessing TSPART. The application identified by connection ID LSS001 has locked partitions 1 and 2. The application identified by connection ID LSS002 has locked partitions 1 and 3.

```
-DB1G DISPLAY DATABASE(DSN8D12A) SPACE(TSPART) PART(1:4) LOCKS
```

Db2 displays the locks as partition locks, as shown in the following output:

```
NAME     TYPE PART  STATUS            CONNID   CORRID       LOCKINFO
-------- ---- ----- ----------------- -------- ------------ ---------
TSPART   TS    0001 RO                LSS001   DSN2SQL      H-IS,P,C
TSPART   TS    0001 RO                LSS002   DSN2SQL      H-IS,P,C
TSPART   TS    0002 RW                LSS001   DSN2SQL      H-IS,P,C
TSPART   TS    0003 RW                LSS002   DSN2SQL      H-IS,P,C
TSPART   TS    0004 RW
```

Example: Displaying information about table spaces and index spaces that are in a restrictive status

The following command displays information about all table spaces and index spaces in the range of databases from DBKD0101 to DBKD0106 that are in a restrictive status. The LIMIT parameter limits the number of messages that are displayed to the available space.

```
-DISPLAY DATABASE(DBKD0101,DBKD0103) SPACENAM(*) RESTRICT LIMIT(*)
```

The output is similar to this output:

```
DSNT360I - ***********************************
DSNT361I - *  DISPLAY DATABASE SUMMARY
           *    RESTRICTED
DSNT360I - ***********************************
DSNT362I -     DATABASE = DBKD0101  STATUS = RW
               DBD LENGTH = 4028
DSNT397I -
NAME     TYPE PART  STATUS            PHYERRLO PHYERRHI CATALOG  PIECE
-------- ---- ----- ----------------- -------- -------- -------- -----
TLKD0101 TS         RW,RESTP
IUKD011A IX         RW,RESTP
IXKD011B IX         RW,RESTP
```

Example: Displaying information about table spaces that are in an auxiliary warning status or informational status

The following command displays information about all table spaces that have the auxiliary warning advisory status (AUXW), and all index spaces that are in informational COPY-pending status (ICOPY) in database DBIQUQ01.

```
-DISPLAY DATABASE(DBIQUQ01) SPACENAM(*) LIMIT(*) ADVISORY
```

The output is similar to this output:

```
DSNT360I - ***********************************
DSNT361I - *  DISPLAY DATABASE SUMMARY
           *    ADVISORY
DSNT360I - ***********************************
DSNT362I -     DATABASE = DBIQUQ01  STATUS = RW
               DBD LENGTH = 8066
DSNT397I -
NAME     TYPE PART  STATUS            PHYERRLO PHYERRHI CATALOG  PIECE
-------- ---- ----- ----------------- -------- -------- -------- -----
TPIQUQ01 TS    0001 RW,AUXW
     -THRU     0004
TPIQUQ01 TS
IAIQUQ01 IX         RW,ICOPY
IAIQUQ02 IX         RW,ICOPY
IAIQUQ03 IX         RW,ICOPY
IAIQUQ04 IX         RW,ICOPY
IPIQUQ01 IX    0001 RW,ICOPY
     -THRU     0004
IPIQUQ01 IX
IUIQUQ03 IX         RW,ICOPY
IXIQUQ02 IX         RW,ICOPY
******* DISPLAY OF DATABASE DBIQUQ01 ENDED      **********************
DSN9022I - DSNTDDIS 'DISPLAY DATABASE' NORMAL COMPLETION
```

Example: Displaying information about all objects in a database

The following command displays a list of all objects in database DB486A. This example shows five objects in the database. TS486A is a table space with four parts and TS486C is a nonpartitioned table space. IX486A is a nonpartitioned index for table space TS486A, IX486B is a partitioned index with four parts, and IX486C is a nonpartitioned index.

```
-DISPLAY DATABASE(DB486A) SPACE(*) OVERVIEW
```

The output is similar to this output:

```
DSNT360I - ***********************************
DSNT361I - *  DISPLAY DATABASE SUMMARY
           *    GLOBAL OVERVIEW
DSNT360I - ***********************************
DSNT362I -     DATABASE = DB486A  STATUS = RW
               DBD LENGTH = 4028
DSNT397I -
NAME     TYPE PART
-------- ---- -----
TS486A   TS    0004
TS486A   TS
IX486A   IX   L0004
IX486A   IX   L*
IX486A   IX
IX486B   IX    0004
IX486B   IX
TS486C   TS
IX486C   IX
******* DISPLAY OF DATABASE DB486A   ENDED     **********************
DSN9022I - DSNTDDIS 'DISPLAY DATABASE' NORMAL COMPLETION
```

Example: Displaying table space information when table spaces are stopped

The following command displays information about all table spaces in database DB486B. In table space TS486X, partitions 1 through 6 are stopped. Partition 7 is in UT and COPY status, partition 8 is in STOP status, and partitions 9 and 10 are in RW status.

```
-DISPLAY DATABASE(DB486B) SPACE(*)
```

The output is similar to this output:

```
DSNT360I - ************************************
DSNT361I - *  DISPLAY DATABASE SUMMARY
           *    GLOBAL OVERVIEW
DSNT360I - ************************************
DSNT362I -     DATABASE = DB486B  STATUS = RW
               DBD LENGTH = 4028
DSNT397I -
NAME     TYPE PART  STATUS            PHYERRLO PHYERRHI CATALOG  PIECE
-------- ---- ----- ----------------- -------- -------- -------- -----
TS486X   TS    0001 STOP
    - THRU     0006
TS486X   TS    0007 UT,COPY
TS486X   TS    0008 STOP
TS486X   TS    0009 RW
    - THRU     0010
TS486X   TS
IX486X   IX   L0001 RW
IX486X   IX   L0002 LSTOP
    - THRU    L0003
IX486X   IX   L0004 LSTOP
    - THRU    L0010
IX486X   IX   L*
IX486Y   IX    0001 RW
    - THRU     0010
IX486Y   IX
IX486Z   IX         RW
******* DISPLAY OF DATABASE DB486B   ENDED     **********************
DSN9022I - DSNTDDIS 'DISPLAY DATABASE' NORMAL COMPLETION
```

Example: Displaying information about all indexes in a database

The following command displays information about all indexes in the DBKD0101 database. INDEX2 contains information to be displayed at a logical level. Partitions 0001 and 0002 of INDEX3 are data-partitioned secondary indexes, as indicated by 'D' in the partition number.

```
-DISPLAY DATABASE(DBKD0101) SPACENAM(INDEX*)
```

The output is similar to this output:

```
DSNT360I - ************************************
DSNT361I - *  DISPLAY DATABASE SUMMARY
           *    RESTRICTED
DSNT360I - ************************************
DSNT362I -     DATABASE = DBKD0101  STATUS = RW
               DBD LENGTH = 4028
DSNT397I -
NAME     TYPE PART  STATUS            PHYERRLO PHYERRHI CATALOG  PIECE
-------- ---- ----- ----------------- -------- -------- -------- -----
INDEX1   IX    0001 RW
    -THRU      0002
INDEX1   IX
INDEX2   IX   L*    RW
INDEX3   IX   D0001 RW
    -THRU     D0002
INDEX3   IX
INDEX4   IX   L0001 RECP
INDEX4   IX   L0002 RW
INDEX4   IX
```

Example: Displaying information about all table spaces in a database that are in an advisory status

The following command displays information about all table spaces in the DBKD0103 database that are in the advisory REBUILD-pending status (ARBDP) and the advisory REORG-status (AREO*). Limit the number of messages that are displayed to the available space. Assume that you specify the following command:

```
-DISPLAY DATABASE(DBKD0103) SPACENAM(*) LIMIT(*) ADVISORY(ARBDP,AREO*)
```

The output is similar to the following output:

```
DSNT360I - ************************************
DSNT361I - *  DISPLAY DATABASE SUMMARY
           *    ADVISORY
```

```
DSNT360I - ************************************
DSNT362I -     DATABASE = DBKD0103  STATUS = RW
               DBD LENGTH = 16142
DSNT397I -
NAME     TYPE PART  STATUS            PHYERRLO PHYERRHI CATALOG  PIECE
-------- ---- ----- ----------------- -------- -------- -------- -----
PIX      IX    0001 RW,ARBDP,AREO*
    -THRU      0007
PIX      IX
```

Example: Displaying information about table space partitions

The following command displays information about table space DB2TSP in database Db2. The PART option includes both lists and ranges to display a very specific set of partitions. The table space underwent a single ROTATE operation before the final partitions were added.

```
-DISPLAY DATABASE(DB2) SPACENAM(DB2TSP) PART(1,2,4:6,9,10:12)
```

The output is similar to the following output:

```
DSNT360I - ************************************
DSNT361I - *  DISPLAY DATABASE SUMMARY
           *    GLOBAL
DSNT360I - ************************************
DSNT362I -      DATABASE = DB2     STATUS = RW
                DBD LENGTH = 4028
DSNT397I -
NAME     TYPE PART  STATUS            PHYERRLO PHYERRHI CATALOG  PIECE
-------- ---- ----- ----------------- -------- -------- -------- -----
DB2TSP   TS    0001 RW,AREO*
DB2TSP   TS    0002 RW,AREO*
DB2TSP   TS    0004 RW
    -THRU      0006
DB2TSP   TS    0009 RW
    -THRU      0012
******* DISPLAY OF DATABASE DB2 ENDED     ****************************
DSN9022I - DSNTDDIS 'DISPLAY DATABASE' NORMAL COMPLETION
```

Example: Displaying information about a table space that is in informational COPY-pending status

The following command displays information about table spaces that are in an advisory status. The output includes any table spaces that are in the informational COPY-pending status.

```
-DISPLAY DATABASE(DBIQUQ01) SPACENAM(*) ADVISORY
```

The output is similar to this output:

```
DSNT360I - ************************************
DSNT362I - DATABASE = DBIQUQ01 STATUS = RW
           DBD LENGTH = 8066
DSNT397I -
NAME     TYPE PART STATUS            HYERRLO  PHYERRHI CATALOG  PIECE
-------- ---- ---- ----------------- -------- -------- -------- -----
TPIQUQ01 TS    001 RW,AUXW
    -THRU      003
TPIQUQ01 TS    004 RW,ICOPY
TPIQUQ01 TS
```

Example: Displaying information about clone tables

Suppose that some databases whose names begin with MYDB have clone objects. The following command displays information about base table and clone table objects, as well as objects that are not involved with cloning.

```
-DISPLAY DATABASE(MYDB*) SPACENAM(*) LIMIT(*)
```

The output is similar to this output:

```
DSNT360I - ************************************
DSNT361I - *  DISPLAY DATABASE SUMMARY
           *    GLOBAL
DSNT360I - ************************************
DSNT362I -     DATABASE = MYDBX  STATUS = STOP
               DBD LENGTH = 4028
DSNT397I -
```

```
NAME     TYPE PART  STATUS            PHYERRLO PHYERRHI CATALOG  PIECE
-------- ---- ----- ----------------- -------- -------- -------- -----
CHKOUT2  TSB1  001      RW
    -THRU      003
CHKOUT2  TSB1
XDEPT1   IXB1  001      RECP
XDEPT1   IXB1  002      RW
    -THRU      003
XDEPT1   IXB1
CHKOUT2  TSC2  001      RO
CHKOUT2  TSC2  002      RW
    -THRU      003
CHKOUT2  TSC2
XDEPT1   IXC2  001      ICOPY
XDEPT1   IXC2  002      RW
    -THRU      003
XDEPT1   IXC2
CHKOUT3  TS    001      RO
    -THRU      003
CHKOUT3  TS
XDEPT3   IX    001      RW
    -THRU      002
XDEPT3   IX    003      RO
XDEPT3   IX
```

Example: Displaying information about all objects that are in restricted status, when table spaces are in the DBETE status

The following command displays all objects that are in a restricted status.

```
-DISPLAY DATABASE(*) SPACENAM(*) RESTRICT
```

When you do not specify specific database names, for objects that are in DBETE status, DISPLAY DATABASE displays the PSID values instead of database names and space names, as shown in the following output:

```
DSNT360I  @ ************************************
DSNT361I  @ *  DISPLAY DATABASE SUMMARY 371
            *    RESTRICTED
DSNT360I  @ ************************************
DSNT362I  @     DATABASE = DB65309  STATUS = RW 373
               DBD LENGTH = 8066
DSNT397I  @ 374
NAME     TYPE PART  STATUS            PHYERRLO PHYERRHI CATALOG  PIECE
-------- ---- ----- ----------------- -------- -------- -------- -----
****0002 UN         RW,DBETE,RECP
****0005 UN         RW,DBETE,RECP
****0007 UN         RW,DBETE,RECP
******* DISPLAY OF DATABASE DB65309  ENDED      **********************
```

Example: Displaying information about specific objects that are in restricted status, when table spaces or index spaces are in the DBETE status

The following command displays objects in database DB65309 that are in a restricted status.

```
-DISPLAY DATABASE(DB65309) SPACENAM(*) RESTRICT
```

When you specify specific database names, for objects that are in DBETE status, DISPLAY DATABASE displays the object names, as shown in the following output:

```
DSNT360I  @ ************************************
DSNT361I  @ *  DISPLAY DATABASE SUMMARY 395
            *    RESTRICTED
DSNT360I  @ ************************************
DSNT362I  @     DATABASE = DB65309  STATUS = RW 397
               DBD LENGTH = 8066
DSNT397I  @ 398
NAME     TYPE PART  STATUS            PHYERRLO PHYERRHI CATALOG  PIECE
-------- ---- ----- ----------------- -------- -------- -------- -----
PS65309G UN         RW,DBETE,RECP
IP65309G UN         RW,DBETE,RECP
IX65309G UN    L*   RW,DBETE,RECP
******* DISPLAY OF DATABASE DB65309  ENDED      **********************
```

Chapter 23. -DISPLAY DDF command (Db2)

The DISPLAY DDF command displays information regarding the status and configuration of DDF, as well as statistical information regarding connections or threads controlled by DDF.

Abbreviation: -DIS DDF

Environment

This command can be issued from a z/OS console, a DSN session under TSO, a DB2I panel (DB2 COMMANDS), an IMS or CICS terminal, or a program using the instrumentation facility interface (IFI).

Data sharing scope: Member

Authorization

To execute this command, you must use a privilege set of the process that includes one of the following privileges or authorities:

- DISPLAY privilege
- System DBADM authority
- SYSOPR authority
- SYSCTRL authority
- SYSADM authority

Db2 commands that are issued from a logged-on z/OS console or TSO SDSF can be checked by Db2 authorization using primary and secondary authorization IDs. A logged-on z/OS user ID must be defined in RACF or a similar security server.

Syntax

```
►► DISPLAY DDF ──┬──────────────────────────────┬──┬──────────┬──►◄
                 └─ ALIAS( alias-name ) ────────┘  └─ DETAIL ─┘
```

Option descriptions

ALIAS(*alias-name*)
Displays information specific to the DDF location alias specified by *alias-name*.

DETAIL
Displays additional statistics and configuration information.

Output

Message DSNL080I (Db2 Messages) indicates the beginning of the output of the command.

Examples

Example: Displaying a detailed DDF report when DDF has not been started
Suppose that DDF has not been started. The following command displays a DDF detail report:

```
-DISPLAY DDF DETAIL
```

© Copyright IBM Corp. 1983, 2024

The output is similar to this output:

```
DSNL081I STATUS=STOPDQ
DSNL082I LOCATION           LUNAME            GENERICLU
DSNL083I STLEC1             -NONE.SYEC1DB2    -NONE
DSNL084I TCPPORT=446   SECPORT=0     RESPORT=5001  IPNAME=-NONE
DSNL085I IPADDR=NONE
DSNL086I SQL    DOMAIN=-NONE
DSNL090I DT=A  CONDBAT=     64 MDBAT=   64
DSNL092I ADBAT=    0 QUEDBAT=      0 INADBAT=      0 CONQUED=      0
DSNL093I DSCDBAT=      0 INACONN=      0
DSNL105I DSNLTDDF CURRENT DDF OPTIONS ARE:
DSNL106I PKGREL = COMMIT
DSNL099I DSNLTDDF DISPLAY DDF REPORT COMPLETE
```

Example: Displaying a summary DDF report when DDF has been started

Suppose that DDF has been started. The following command displays a DDF summary report:

```
-DISPLAY DDF
```

The output is similar to this output:

```
DSNL080I  ) DSNLTDDF DISPLAY DDF REPORT FOLLOWS:
DSNL081I STATUS=STARTD
DSNL082I LOCATION           LUNAME            GENERICLU
DSNL083I STLEC1             -NONE             -NONE
DSNL084I TCPPORT=446   SECPORT=447   RESPORT=5001  IPNAME=XYZ_A
DSNL085I IPADDR=::9.30.178.50
DSNL085I IPADDR=ABCD::91E:B232
DSNL086I SQL    DOMAIN=xyz_ahost.ibm.com
DSNL086I RESYNC DOMAIN=xyz_ahost.ibm.com
DSNL087I ALIAS           PORT     SECPORT STATUS
DSNL088I XYZ_S           448      449     STATIC
DSNL089I MEMBER IPADDR=::9.30.178.112
DSNL089I MEMBER IPADDR=ABCD::91E:B270
DSNL099I DSNLTDDF DISPLAY DDF REPORT COMPLETE
```

Example: Displaying a detailed DDF report when DDF has been started

Suppose that DDF has been started. The following command displays a detailed DDF report:

```
-DISPLAY DDF DETAIL
```

The output is similar to this output:

```
DSNL080I  ) DSNLTDDF DISPLAY DDF REPORT FOLLOWS: 211
DSNL081I STATUS=STARTD
DSNL082I LOCATION           LUNAME            GENERICLU
DSNL083I STLEC1             USIBMSY.SYEC1DB2  -NONE
DSNL084I TCPPORT=446   SECPORT=447   RESPORT=5001  IPNAME=XYZ_A
DSNL085I IPADDR=::9.30.178.50
DSNL085I IPADDR=ABCD::91E:B232
DSNL086I SQL    DOMAIN=xyz_ahost.ibm.com
DSNL086I RESYNC DOMAIN=xyz_ahost.ibm.com
DSNL087I ALIAS           PORT     SECPORT STATUS
DSNL088I XYZ_S           448      449     STATIC
DSNL089I MEMBER IPADDR=::9.30.178.112
DSNL089I MEMBER IPADDR=ABCD::91E:B270
DSNL090I DT=A  CONDBAT=     64 MDBAT=   64
DSNL092I ADBAT=    0 QUEDBAT=      0 INADBAT=      0 CONQUED=      0
DSNL093I DSCDBAT=      0 INACONN=      0
DSNL100I LOCATION SERVER LIST:
DSNL101I WT IPADDR            IPADDR
DSNL102I 64 ::9.30.178.111    ABCD::91E:B26F
DSNL102I    ::9.30.178.112    ABCD::91E:B270
DSNL105I DSNLTDDF CURRENT DDF OPTIONS ARE:
DSNL106I PKGREL = COMMIT
DSNL099I DSNLTDDF DISPLAY DDF REPORT COMPLETE
```

Example: Displaying a summary DDF report when location aliases are defined

The following command displays a DDF summary report.

```
-DISPLAY DDF
```

Suppose that the DSNJU003 utility has been used to define location aliases. The output includes information about location aliases, as shown in the following output:

```
DSNL080I - DSNLTDDF DISPLAY DDF REPORT FOLLOWS:
DSNL081I STATUS=STARTD
DSNL082I LOCATION         LUNAME       GENERICLU
DSNL083I STL717A          USIBMSY.SYEC717A   -NONE
DSNL084I TCPPORT=446   SECPORT=0     RESPORT=5001  IPNAME=-NONE
DSNL085I IPADDR=::9.30.115.135
DSNL085I IPADDR=2002:91E:610:1::5
DSNL086I SQL    DOMAIN=v7ec135.svl.ibm.com
DSNL087I ALIAS              PORT  SECPORT STATUS
DSNL088I STL717A1           551   0 STATIC
DSNL088I STL717A2           552   0 STATIC
DSNL088I STL717A3           553   0 STATIC
DSNL088I STL717A4           554   0 STATIC
DSNL088I STL717A5           555   0 STATIC
DSNL088I STL717A6           556   0 STATIC
DSNL088I STL717A7           557   0 STATIC
DSNL088I STL717A8           558   0 STATIC
DSNL099I DSNLTDDF DISPLAY DDF REPORT COMPLETE
```

Example: Displaying information about a specific location alias when DDF has not been started

The following command displays information about location alias ALIAS01 when DDF has not been started.

```
-DISPLAY DDF ALIAS(ALIAS01)
```

The output is similar to the following output:

```
-DISPLAY DDF ALIAS(ALIAS01)
DSNL080I @ DSNLTDDF DISPLAY DDF REPORT FOLLOWS:
DSNL087I ALIAS              PORT  SECPORT STATUS
DSNL088I ALIAS01            5004  5005    STOPD
DSNL089I  MEMBER IPADDR=::9.30.114.22
DSNL089I  MEMBER IPADDR=2002:91E:610::1
DSNL099I DSNLTDDF DISPLAY DDF REPORT COMPLETE
```

Example: Displaying detailed information about a specific location alias when DDF has been started

The following command displays information about location alias alias01 when DDF has been started.

```
-DISPLAY DDF ALIAS(ALIAS01) DETAIL
```

The output is similar to the following output:

```
DSNL080I @ DSNLTDDF DISPLAY DDF REPORT FOLLOWS:
DSNL087I ALIAS              PORT  SECPORT STATUS
DSNL088I ALIAS01            5004  5005    STARTD
DSNL089I  MEMBER IPADDR=::9.30.114.22
DSNL089I  MEMBER IPADDR=2002:91E:610::1
DSNL096I  ADBAT=    100  CONQUED=     1000   TCONS=    1000
DSNL100I  LOCATION SERVER LIST:
DSNL101I  WT IPADDR            IPADDR
DSNL102I  32 ::9.30.114.22     2002:91E:610::1
DSNL102I  32 ::1.2.3.4
DSNL099I DSNLTDDF DISPLAY DDF REPORT COMPLETE
```

Related information

DSNL080I (Db2 Messages)

Chapter 24. -DISPLAY DYNQUERYCAPTURE command (Db2)

The Db2 command DISPLAY DYNQUERYCAPTURE displays all currently active dynamic query capture monitors.

Abbreviation: -DIS DYNQUERY

Environment

This command can be issued from the z/OS console, through a batch job, or the instrumentation facility interface (IFI).

Data sharing scope: Member

Authorization

To execute this command, you must use a privilege set of the process that includes one of the following authorities:

- SQLADM authority
- System DBADM authority
- SYSOPR authority
- SYSCTRL authority
- SYSADM authority

Syntax

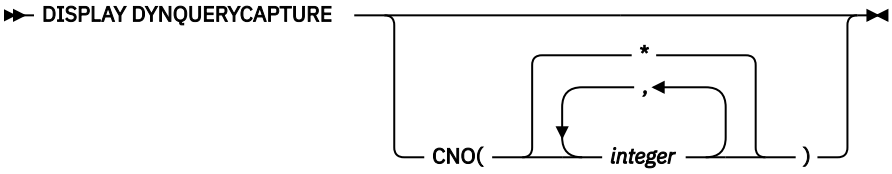

Option descriptions

CNO(*integer*)
Limit display to a particular capture monitor, a list of capture monitors, or display all capture monitors.

*****
Display all active capture monitors.

integer
Display the specified active capture monitors.

Example: displaying all active capture monitors for dynamic queries

Suppose that you issue the following command:

```
-DISPLAY DYNQUERYCAPTURE CNO (*)
```

The output is similar to the following output:

```
DSNX250I -DB2A DSNXEDQC 215
*** BEGIN DISPLAY DYNAMIC QUERY CAPTURE CNO(*)
====================================================================
```

© Copyright IBM Corp. 1983, 2024

```
CNO : 1
STBLGRP : GRP1
SQLID : APPL01
THRESHOLD : 10
STABILIZED : 156
-------------------------------------------------------------------
CNO : 5
STBLGRP : GRP2
SQLID : APPL02
THRESHOLD : 30
STABILIZED : 47
-------------------------------------------------------------------
...
CNO : 51
STBLGRP : GRP126
SQLID : APPL126
THRESHOLD : 9
>>> MORE TO DISPLAY ...
DSNX260I -DB2A DISPLAY DYNAMIC QUERY CAPTURE CONTINUES
STABILIZED : 13
-------------------------------------------------------------------
CNO : 52
STBLGRP : GRP127
SQLID : APPL127
THRESHOLD : 50
STABILIZED : 2
===================================================================
*** END DISPLAY DYNAMIC QUERY CAPTURE
DSN9022I -DB2A DSNXEDQC 'DISPLAY DYNQUERYCAPTURE' NORMAL COMPLETION
```

Output

Message DSNX250I indicates the beginning of the output of the command.

Message DSNX260I indicates that a long display output continues from the previous output.

Message DSN9022I indicates successful completion of processing for the DISPLAY DYNQUERYRCAPTURE command.

Message DSN9023I indicates that processing for the DISPLAY DYNQUERYCAPTURE did not complete successfully.

Related tasks

Stabilizing access paths for dynamic SQL statements (Db2 Performance)

Related reference

-START DYNQUERYCAPTURE command (Db2)
The Db2 command START DYNQUERYCAPTURE stabilizes access paths for qualified cached dynamic queries. This command can also optionally start monitoring of cached dynamic queries that qualify for a scope but have not met the specified execution threshold for stabilization.

-STOP DYNQUERYCAPTURE command (Db2)
The Db2 command STOP DYNQUERYCAPTURE stops the capture of dynamic SQL statements by the specified monitors.

FREE STABILIZED DYNAMIC QUERY subcommand (DSN)
The DSN subcommand FREE STABILIZED DYNAMIC QUERY removes from certain catalog tables one or more stabilized dynamic queries. If any of the specified queries are in the dynamic statement cache, FREE STABILIZED DYNAMIC QUERY also purges the statements from the dynamic statement cache.

Chapter 25. -DISPLAY FUNCTION SPECIFIC command (Db2)

The Db2 command DISPLAY FUNCTION SPECIFIC displays statistics about external user-defined functions that Db2 applications access.

Abbreviation: -DIS FUNC SPEC

Environment

This command can be issued from a z/OS console, a DSN session under TSO, a DB2I panel (DB2 COMMANDS), an IMS or CICS terminal, or a program using the instrumentation facility interface (IFI).

Data sharing scope: Group or member

Authorization

To run this command, you must use a privilege set of the process that includes one of the following authorities for each function:

- DISPLAY privilege
- System DBADM authority
- SYSOPR authority
- SYSCTRL authority
- SYSADM authority

If you specify DISPLAY FUNCTION SPECIFIC *.* or *schema.partial-name* *, you must use a privilege set of the process that includes one of the following authorities:

- SYSOPR authority
- SYSCTRL authority
- SYSADM authority

Db2 commands that are issued from a logged-on z/OS console or TSO SDSF can be checked by Db2 authorization using primary and secondary authorization IDs. A logged-on z/OS user ID must be defined in RACF or a similar security server.

If you are using an external security product to authorize usage of DISPLAY FUNCTION SPECIFIC, define SYSOPR as a user to the external security product for those cases in which DISPLAY FUNCTION SPECIFIC SCOPE(GROUP) runs on a remote system and SYSOPR is used as the authorization ID.

Syntax

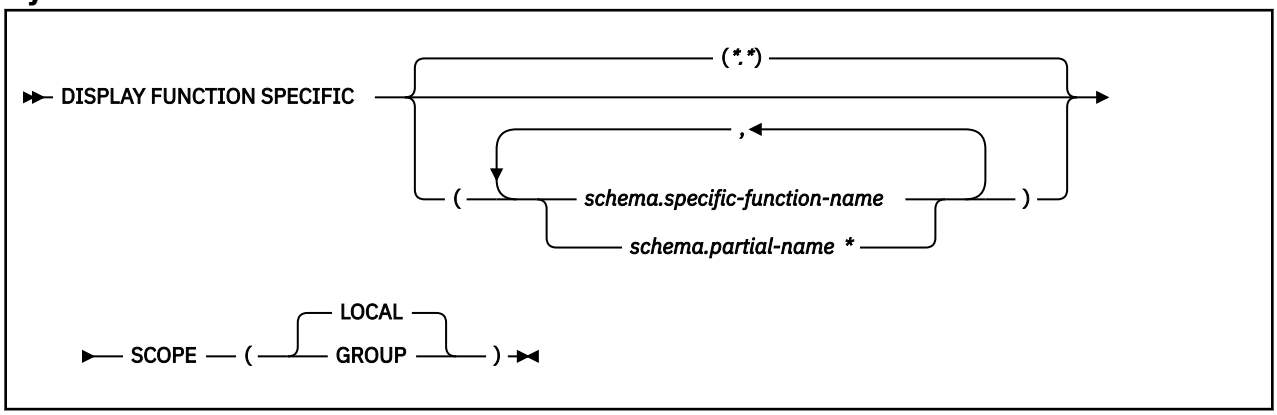

© Copyright IBM Corp. 1983, 2024

Option descriptions

schema.specific-function-name

Displays information for the specific named function in the specified schema. You cannot specify a function name as you can in SQL; you must use the specific name. If a specific name was not specified on the CREATE FUNCTION statement, query SYSIBM.SYSROUTINES for the correct specific name:

```
SELECT SPECIFICNAME, PARM_COUNT
  FROM SYSIBM.SYSROUTINES
   WHERE NAME='function_name'
    AND SCHEMA='schema_name';
```

For overloaded functions, this query can return multiple rows.

schema.partial-name*

Displays information for a set of functions in the specified schema.

The specific names of all functions in the set begin with *partial-name* and can end with any string, including the empty string. For example, schema1.ABC* displays information for all functions with specific names that begin with ABC in schema1.

(*.*)

Displays information for all functions that Db2 applications have accessed since the Db2 subsystem was started.

SCOPE

Specifies the scope of the command.

(LOCAL)

Specifies that the display includes information from only the local member.

(GROUP)

Specifies that the display includes information from all members of the data sharing group.

Usage notes

Displaying information for all functions

If you do not specify a partial or specific function name, Db2 displays information for all functions that Db2 applications have accessed since the Db2 subsystem was started.

Built-in functions or user-defined functions that are sourced on another function

This command does not apply to built-in functions or user-defined functions that are sourced on another function.

Displaying SQL functions

SQL functions are displayed in the DISPLAY FUNCTION SPECIFIC output only if you invoke the function in debug mode. In that case, the WLM environment column in the output contains the WLM environment that you specified for debugging when you created the SQL function.

The DISPLAY FUNCTION output shows the statistics on an SQL function as '0' if the function is under the effect of a STOP FUNCTION command.

Trace information for commands issued with group scope

If this command is issued with options that specify group scope in a Db2 data sharing member, it also runs on all other active members. IFICID 090 trace records for other group members can show that the same command was issued by the SYSOPR authorization ID from the 016.TLPKN5F correlation ID, in addition to the trace records from the member where the original command was issued. See Command scope in Db2 data sharing (Db2 Data Sharing Planning and Administration).

Output

Message DSNX975I (Db2 Messages) indicates the beginning of the output of the command.

Examples

Example: Displaying information about all user-defined functions in a schema

The following command displays information about all functions in the PAYROLL schema and the HRPROD schema.

```
-DISPLAY FUNCTION SPECIFIC(PAYROLL.*, HRPROD.*)
```

The output is similar to the following output:

```
DSNX975I = DSNX9DIS DISPLAY FUNCTION SPECIFIC REPORT FOLLOWS-

------ SCHEMA=PAYROLL
FUNCTION        STATUS      ACTIVE   QUED   MAXQ   TIMEOUT   FAIL    WLM_ENV
PAYRFNC1        STARTED       0       0       1       0       0      WLMENV1
PAYRFNC2        STOPQUE       0       5       5       3       0      WLMENV1
PAYRFNC3        STARTED       2       0       6       0       0      WLMENV1
USERFNC4        STOPREJ       0       0       1       0       0      WLMENV3

------ SCHEMA=HRPROD
FUNCTION        STATUS      ACTIVE   QUED   MAXQ   TIMEOUT   FAIL    WLM_ENV
HRFNC1          STARTED       0       0       1       0       0      WLMENV2
HRFNC2          STOPREJ       0       0       1       0       0      WLMENV2
DSNX9DIS DISPLAY FUNCTION SPECIFIC REPORT COMPLETE
DSN9022I = DSNX9COM '-DISPLAY FUNC' NORMAL COMPLETION
```

Example: Displaying information about selected user-defined functions in a schema

The following command displays information about functions USERFNC2 and USERFNC4 in the PAYROLL schema.

```
-DISPLAY FUNCTION SPECIFIC(PAYROLL.USERFNC2,PAYROLL.USERFNC4)
```

The output is similar to the following output:

```
DSNX975I = DSNX9DIS DISPLAY FUNCTION SPECIFIC REPORT FOLLOWS-

------ SCHEMA=PAYROLL
FUNCTION        STATUS      ACTIVE   QUED   MAXQ   TIMEOUT   FAIL    WLM_ENV
USERFNC2        STOPQUE       0       5       5       3       0      WLMENV3
USERFNC4        STOPREJ       0       0       1       0       0      WLMENV3
DSNX9DIS DISPLAY FUNCTION SPECIFIC REPORT COMPLETE
DSN9022I = DSNX9COM '-DISPLAY FUNC' NORMAL COMPLETION
```

Example: Displaying information about stopped user-defined functions

Suppose that you issue the following commands:

```
-STOP FUNCTION SPECIFIC(SYSADM.FN*) ACTION(QUEUE)
-DISPLAY FUNCTION SPECIFIC(SYSADM.*)
```

The output looks similar to the following output:

```
DSNX975I = DSNX9DIS DISPLAY FUNCTION SPECIFIC REPORT FOLLOWS-

------ SCHEMA=SYSADM
FUNCTION       STATUS    ACTIVE   QUED  MAXQ  TIMEOUT  FAIL   WLM_ENV
FNC1           STOPQUE     0       0     0       0      0     WLMENV1
FNC2           STOPQUE     0       0     0       0      0     WLMENV3
DSNX9DIS FUNCTIONS FN - FN* STOP QUEUE
DSNX9DIS DISPLAY FUNCTION SPECIFIC REPORT COMPLETE
DSN9022I = DSNX9COM '-DISPLAY FUNC' NORMAL COMPLETION
```

Chapter 26. -DISPLAY GROUP command (Db2)

The Db2 command DISPLAY GROUP displays information about the data sharing group to which a Db2 subsystem belongs, including information about the code level, catalog level, and function level of the group.

DISPLAY GROUP DETAIL displays information about the Db2 subsystem and data sharing group members.

Abbreviation: -DIS GROUP

Environment

This command can be issued from a z/OS console, a DSN session under TSO, a DB2I panel (DB2 COMMANDS), an IMS or CICS terminal, or a program using the instrumentation facility interface (IFI).

Data sharing scope: Member, Group (for ENCRYPTION_KEYLABEL)

Authorization

To execute this command, you must use a privilege set of the process that includes one of the following privileges or authorities:

- DISPLAY privilege
- System DBADM authority
- SYSOPR authority
- SYSCTRL authority
- SYSADM authority

Db2 commands that are issued from a logged-on z/OS console or TSO SDSF can be checked by Db2 authorization using primary and secondary authorization IDs. A logged-on z/OS user ID must be defined in RACF or a similar security server.

Syntax

```
>>- DISPLAY GROUP ---------------------->><
                  |       DETAIL        |
```

Option descriptions

DETAIL
Displays information about the current inline length of the LOB that contains bound package information.

Usage notes

Member status
Message DSN7100I includes information about the XCF status of the members (STATUS in the display output). The status can be ACTIVE, QUIESCED, FAILED, or DEACT.

ACTIVE
Indicates that the Db2 subsystem is active.

FAILED
Indicates that the Db2 subsystem is failed.

© Copyright IBM Corp. 1983, 2024

DEACT
Indicates that the Db2 subsystem is deactivated. Deactivation is the first step in the process of deleting a data sharing member.

QUIESCED
Indicates a normal quiesced state, as the result of a normal STOP DB2 command.

Q
Q (quiesced) can be paired with one or more of the following letters:

I
Indoubt or postponed abort units of recovery (URs) are outstanding. This means that retained locks are held.

C
The member was shut down without completing castout processing. This event might have occurred because Db2 was started with the LIGHT(YES) option or stopped with the CASTOUT(NO) option, or because an error was encountered while attempting to cast out data from the coupling facility to the disk.

If Db2 encounters errors during castout processing, ensure that no connectivity problems exist between the coupling facility and the processor before restarting Db2.

R
Retained information is needed for Db2 to perform resynchronization with one or more remote locations.

When Db2 is restarted, this resynchronization occurs.

ACTIVE
Indicates a normal active state without conditions.

A
The member is active, but with the additional conditions. A (active) can be paired with the following letter:

I
Indoubt or postponed abort units of recovery (URs) are outstanding. This indicates that retained locks are held.

****
The state of the member is unknown.

Usage notes

Using this command in a non-data-sharing environment
Db2 issues the same response, except for information which does not exist: group name, member name, and member ID.

Trace information for data sharing members
When this command with group scope is issued in a Db2 data sharing member, it also runs on all other active members. IFICID 090 trace records for other group members can show that the same command was issued by the SYSOPR authorization ID from the 016.TLPKN5F correlation ID, in addition to the trace records from the member where the original command was issued. See Command scope in Db2 data sharing (Db2 Data Sharing Planning and Administration).

Examples

The following examples show output from DISPLAY GROUP commands in Db2 12:

```
-DB2A DISPLAY GROUP DETAIL
```

Example: Data sharing group with coexisting Db2 12 and Db2 11 members

In the following example, two members are migrated to Db2 12 and ready for the activation of new function in Db2 12. However, the code level of member DB2B indicates that it is not migrated to Db2

12, which means the group is not ready for activation of function level 500. The DB2 LVL value is 111500, which indicates the code level of Db2 11 in new-function mode.

Also, the migration readiness report shows that the Db2 data sharing group is not ready for migration to Db2 13 due to coexistence with Db2 11.

```
-DISPLAY GROUP DETAIL
DSN7100I  -DB2A DSN7GCMD
*** BEGIN DISPLAY OF GROUP(DSNCAT  ) CATALOG LEVEL(V12R1M500)
                  CURRENT FUNCTION LEVEL(V12R1M100)
                  HIGHEST ACTIVATED FUNCTION LEVEL(V12R1M100)
                  HIGHEST POSSIBLE FUNCTION LEVEL(V12R1M100)
                  PROTOCOL LEVEL(2)
                  GROUP ATTACH NAME(DSNG)
-------------------------------------------------------------------
DB2          SUB                      DB2    SYSTEM    IRLM
MEMBER   ID  SYS  CMDPREF   STATUS   LVL    NAME      SUBSYS IRLMPROC
-------- --- ---- --------  -------- ------ --------  ----   --------
DB2A       1 DB2A -DB2A     ACTIVE   121500 MVSA      DJ2A   DB2AIRLM
DB2B       2 DB2B -DB2B     ACTIVE   111500 MVSB      DJ2B   DB2BIRLM
DB2C       3 DB2C -DB2C     ACTIVE   121500 MVSC      DJ2C   DB2CIRLM
-------------------------------------------------------------------

MIGRATION READINESS REPORT
--------------------------
DB2       CODE       SPE      MIGRATION
MEMBER    LEVEL      APAR     ELIGIBLE
--------  ---------  -------  ---
DB2A      V12R1M500  .......  NO
DB2B      V11R1M500  .......  NO
DB2B      V12R1M500  .......  NO
-------------------------------------------------------------------
MIGRATION READINESS STATUS: IS NOT READY FOR DB2 13
REASON: COEXISTENCE PRECLUDES MIGRATION TO THE NEXT DB2 RELEASE
-------------------------------------------------------------------
DISPLAY SUBGROUP ATTACH INFORMATION FOR GROUP ATTACH DSNG
-------------------------------------------------------------------
-------------------------------------------------------------------
SCA   STRUCTURE SIZE:    12288 KB, STATUS= AC,   SCA IN USE:     8 %
LOCK1 STRUCTURE SIZE:    12288 KB
NUMBER  LOCK ENTRIES:     1048576
NUMBER  LIST ENTRIES:       23073, LIST ENTRIES  IN USE:          7
SPT01 INLINE LENGTH:        32138
*** END DISPLAY OF GROUP(DSNCAT  )
DSN9022I  -DB2C DSN7GCMD 'DISPLAY GROUP ' NORMAL COMPLETION
```

Example: Data sharing group with all active members migrated to Db2 12 code, before the activation of function level 500

The following DISPLAY GROUP output illustrates a data sharing group with all active members migrated to Db2 12 and ready for the activation of function level 500.

Also, the migration readiness report shows that the Db2 data sharing group is not ready for migration to Db2 13 due to the highest activated function level and not all members have the fallback SPE APAR.

```
DSN7100I  -DB2B DSN7GCMD
*** BEGIN DISPLAY OF GROUP(DSNCAT  ) CATALOG LEVEL(V12R1M500)
                  CURRENT FUNCTION LEVEL(V12R1M100)
                  HIGHEST ACTIVATED FUNCTION LEVEL(V12R1M100)
                  HIGHEST POSSIBLE FUNCTION LEVEL(V12R1M500)
                  PROTOCOL LEVEL(2)
                  GROUP ATTACH NAME(DSNG)
-------------------------------------------------------------------
DB2          SUB                      DB2    SYSTEM    IRLM
MEMBER   ID  SYS  CMDPREF   STATUS   LVL    NAME      SUBSYS IRLMPROC
-------- --- ---- --------  -------- ------ --------  ----   --------
DB2A       1 DB2A -DB2A     ACTIVE   121500 MVSA      DJ2A   DB2AIRLM
DB2B       2 DB2B -DB2B     ACTIVE   121510 MVSB      DJ2B   DB2BIRLM
DB2C       3 DB2C -DB2C     ACTIVE   121500 MVSC      DJ2C   DB2CIRLM
-------------------------------------------------------------------
MIGRATION READINESS REPORT
--------------------------
DB2       CODE       SPE      MIGRATION
MEMBER    LEVEL      APAR     ELIGIBLE
--------  ---------  -------  ---
DB2A      V12R1M510  .......  NO
DB2B      V12R1M510  PH37108  NO
```

```
DB2C      V12R1M510  .......  NO
---------------------------------------------------------------------
MIGRATION READINESS STATUS: GROUP IS NOT READY FOR DB2 NEXT
REASON: HIGHEST ACTIVATED FUNCTION LEVEL NOT V12R1M510
-------------------------------------------------------------------
DISPLAY SUBGROUP ATTACH INFORMATION FOR GROUP ATTACH DSNG
-------------------------------------------------------------------
SCA   STRUCTURE SIZE:    12288 KB, STATUS= AC,   SCA IN USE:     9 %
LOCK1 STRUCTURE SIZE:    12288 KB
NUMBER  LOCK ENTRIES:     1048576
NUMBER  LIST ENTRIES:       23073, LIST ENTRIES  IN USE:          17
SPT01 INLINE LENGTH:        32138
*** END DISPLAY OF GROUP(DSNCAT  )
DSN9022I  -DB2B DSN7GCMD 'DISPLAY GROUP ' NORMAL COMPLETION
```

Example: Data sharing group with all active members migrated to Db2 12 after the activation of function level 500

The following DISPLAY GROUP output illustrates a data sharing group with function level 500 activated.

Also, the migration readiness report shows that the Db2 data sharing group is not ready for migration to Db2 13 due to the highest activated function level and the missing SPE APAR.

```
DSN7100I  -DB2A DSN7GCMD
*** BEGIN DISPLAY OF GROUP(DSNCAT  ) CATALOG LEVEL(V12R1M500)
                  CURRENT FUNCTION LEVEL(V12R1M500)
                  HIGHEST ACTIVATED FUNCTION LEVEL(V12R1M500)
                  HIGHEST POSSIBLE FUNCTION LEVEL(V12R1M500)
                  PROTOCOL LEVEL(2)
                  GROUP ATTACH NAME(DSNG)
-------------------------------------------------------------------
DB2          SUB                     DB2    SYSTEM    IRLM
MEMBER   ID  SYS  CMDPREF   STATUS   LVL    NAME      SUBSYS IRLMPROC
-------- --- ---- --------  -------- ------ --------  ----   --------
DB2A       1 DB2A -DB2A     ACTIVE   121500 MVSA      DJ2A   DB2AIRLM
DB2B       2 DB2B -DB2B     ACTIVE   121500 MVSB      DJ2B   DB2BIRLM
DB2C       3 DB2C -DB2C     ACTIVE   121500 MVSC      DJ2C   DB2CIRLM
-------------------------------------------------------------------
MIGRATION READINESS REPORT
--------------------------
DB2       CODE       SPE      MIGRATION
MEMBER    LEVEL      APAR     ELIGIBLE
--------  ---------  -------  ---
DB2A      V12R1M500  .......  NO
DB2B      V12R1M500  .......  NO
DB2B      V12R1M500  .......  NO
---------------------------------------------------------------------
MIGRATION READINESS STATUS:  GROUP IS NOT READY FOR DB2 13
REASON: HIGHEST ACTIVATED FUNCTION LEVEL NOT V12R1M510
-------------------------------------------------------------------
DISPLAY SUBGROUP ATTACH INFORMATION FOR GROUP ATTACH DSNG
-------------------------------------------------------------------
---------------------------------------------------------------------
SCA   STRUCTURE SIZE:    12288 KB, STATUS= AC,   SCA IN USE:     9 %
LOCK1 STRUCTURE SIZE:    12288 KB
NUMBER  LOCK ENTRIES:     1048576
NUMBER  LIST ENTRIES:       23073, LIST ENTRIES  IN USE:           0
SPT01 INLINE LENGTH:        32138
*** END DISPLAY OF GROUP(DSNCAT  )
DSN9022I  -DB2A DSN7GCMD 'DISPLAY GROUP ' NORMAL COMPLETION
```

Example: Db2 12 data sharing group ready for migration to Db2 13

The example single-member Db2 12 data sharing group is ready for migration to Db2 13.

```
DSN7100I  -DB2A DSN7GCMD
*** BEGIN DISPLAY OF GROUP(DSNCAT  ) CATALOG LEVEL(V12R1M509)
                  CURRENT FUNCTION LEVEL(V12R1M510)
                  HIGHEST ACTIVATED FUNCTION LEVEL(V12R1M510)
                  HIGHEST POSSIBLE FUNCTION LEVEL(V12R1M510)
                  PROTOCOL LEVEL(2)
                  GROUP ATTACH NAME(DSNG)
---------------------------------------------------------------------
DB2          SUB                     DB2    SYSTEM    IRLM
MEMBER   ID  SYS  CMDPREF   STATUS   LVL    NAME      SUBSYS PRLM2171
DB2A       1 DB2A -DB2A     ACTIVE   121510 UTEC5     PR21   PRLM21
-------------------------------------------------------------------
MIGRATION READINESS REPORT
```

```
---------------------------
DB2       CODE       SPE      MIGRATION
MEMBER    LEVEL      APAR     ELIGIBLE
--------  ---------  -------  ---
DB2A      V12R1M510  PH37108  YES
---------------------------------------------------------------------
MIGRATION READINESS STATUS: GROUP IS READY FOR MIGRATION TO DB2 13
---------------------------------------------------------------------
DISPLAY SUBGROUP ATTACH INFORMATION FOR GROUP ATTACH DSNG
---------------------------------------------------------------------
---------------------------------------------------------------------
SCA   STRUCTURE SIZE:    12288 KB, STATUS= AC,   SCA IN USE:     5 %
LOCK1 STRUCTURE SIZE:    12288 KB
NUMBER  LOCK ENTRIES:     1048576
NUMBER  LIST ENTRIES:       23151, LIST ENTRIES  IN USE:          0
SPT01 INLINE LENGTH:        32138
*** END DISPLAY OF GROUP(DSNCAT  )
-DB2A DSN7GCMD 'DISPLAY GROUP ' NORMAL DSN9022I  COMPLETION
```

Example: Db2 12 data sharing group not ready for migration to Db2 13

The example Db2 12 data sharing group not ready for migration to Db2 13 because of the coexistence with Db2 11.

```
DSN7100I  -DB2A DSN7GCMD
*** BEGIN DISPLAY OF GROUP(DSNCAT  ) CATALOG LEVEL(V12R1M500)
                  CURRENT FUNCTION LEVEL(V12R1M100)
                  HIGHEST ACTIVATED FUNCTION LEVEL(V12R1M100)
                  HIGHEST POSSIBLE FUNCTION LEVEL(V12R1M100)
                  PROTOCOL LEVEL(2)
                  GROUP ATTACH NAME(DSNG)
---------------------------------------------------------------------
DB2          SUB                     DB2    SYSTEM    IRLM
MEMBER   ID  SYS  CMDPREF   STATUS   LVL    NAME      SUBSYS PRLM2171
DB2       1 DB2A -DB2A     ACTIVE   121510 UTEC5     PR21   PRLM21
DB2B      2 DB2B -DB2B     ACTIVE   111500 UTEC5     QR21   QRLM21
---------------------------------------------------------------------
---------------------------------------------------------------------
DISPLAY SUBGROUP ATTACH INFORMATION FOR GROUP ATTACH DSNG
---------------------------------------------------------------------
MIGRATION READINESS REPORT
---------------------------
DB2       CODE       SPE      MIGRATION
MEMBER    LEVEL      APAR     ELIGIBLE
--------  ---------  -------  ---
DB2A      V12R1M510  PH37108  YES
DB2B      V11R1M500  .......  NO
---------------------------------------------------------------------
MIGRATION READINESS STATUS: GROUP IS NOT READY FOR DB2 13
REASON: COEXISTENCE PRECLUDES MIGRATION TO THE NEXT DB2 RELEASE
---------------------------------------------------------------------
SCA   STRUCTURE SIZE:    12288 KB, STATUS= AC,   SCA IN USE:     5 %
LOCK1 STRUCTURE SIZE:    12288 KB
NUMBER  LOCK ENTRIES:     1048576
NUMBER  LIST ENTRIES:       23151, LIST ENTRIES  IN USE:          5
SPT01 INLINE LENGTH:        32138
*** END DISPLAY OF GROUP(DSNCAT  )
DSN9022I  -DB2A DSN7GCMD 'DISPLAY GROUP ' NORMAL COMPLETION
```

Example: standalone Db2 12 subsystem not ready for migration to Db2 13

The example Db2 subsystem has a sufficient code level and the fallback SPE APAR for migration to Db2 13. However, it is not ready for migration to Db2 13 because of its highest activated function level.

```
DSN7100I  -DB2A DSN7GCMD
*** BEGIN DISPLAY OF GROUP(........) CATALOG LEVEL(V12R1M500)
                  CURRENT FUNCTION LEVEL(V12R1M100)
                  HIGHEST ACTIVATED FUNCTION LEVEL(V12R1M100)
                  HIGHEST POSSIBLE FUNCTION LEVEL(V12R1M501)
                  PROTOCOL LEVEL(2)
                  GROUP ATTACH NAME(....)
---------------------------------------------------------------------
DB2          SUB                     DB2    SYSTEM    IRLM
MEMBER   ID  SYS  CMDPREF   STATUS   LVL    NAME      SUBSYS PRLMPR21
-------- --- ---- --------  -------- ------ --------  ----   --------
........   0 DB2A -DB2A     ACTIVE   121510 UTEC6     PR21   PRLMPR21
---------------------------------------------------------------------
---------------------------------------------------------------------
```

```
DISPLAY SUBGROUP ATTACH INFORMATION FOR GROUP ATTACH DSNG
-------------------------------------------------------------------
MIGRATION READINESS REPORT
--------------------------
DB2       CODE       SPE      MIGRATION
MEMBER    LEVEL      APAR     ELIGIBLE
--------  ---------  -------  ---
........  V12R1M510  PH37108  YES
-------------------------------------------------------------------
MIGRATION READINESS STATUS: SUBSYSTEM IS NOT READY FOR DB2 13
REASON: HIGHEST ACTIVATED FUNCTION LEVEL NOT V12R1M510
-------------------------------------------------------------------
SPT01 INLINE LENGTH:        32138
*** END DISPLAY OF GROUP(........)
DSN9022I  -DB2A DSN7GCMD 'DISPLAY GROUP ' NORMAL COMPLETION
```

FL 502 Example: Data sharing group with an encryption key label assigned to all members

If the subsystem parameter ENCRYPTION_KEYLABEL is specified for the members of a data sharing group, issue the following command to display the key label:

```
-DISPLAY GROUP DETAIL
```

The output is similar to the following:

```
DSN7100I -DB2C DSN7GCMD
*** BEGIN DISPLAY OF GROUP(DSNCAT  ) CATALOG LEVEL(V12R1M502)
                  CURRENT FUNCTION LEVEL(V12R1M502)
                  HIGHEST ACTIVATED FUNCTION LEVEL(V12R1M502)
                  HIGHEST POSSIBLE FUNCTION LEVEL(V12R1M502)
                  PROTOCOL LEVEL(2)
                  GROUP ATTACH NAME(DSNG)
                  ENCRYPTION KEY LABEL (SYSTEM.KEY01)
```

Output

Message DSN7100I (Db2 Messages) indicates the beginning of the output of the command.

Related reference

Obtaining information about the group (Db2 Data Sharing Planning and Administration)

Chapter 27. -DISPLAY GROUPBUFFERPOOL command (Db2)

The Db2 command DISPLAY GROUPBUFFERPOOL displays information about the status of Db2 group buffer pools. It can also display related statistics.

Abbreviation

-DIS GBPOOL

Environment

This command can be issued from a z/OS console, a DSN session under TSO, a DB2I panel (DB2 COMMANDS), an IMS or CICS terminal, or a program using the instrumentation facility interface (IFI).

Data sharing scope: Group

Authorization

To execute this command, you must use a privilege set of the process that includes one of the following privileges or authorities:

- DISPLAY privilege
- System DBADM authority
- SYSOPR authority
- SYSCTRL authority
- SYSADM authority

Db2 commands that are issued from a logged-on z/OS console or TSO SDSF can be checked by Db2 authorization using primary and secondary authorization IDs. A logged-on z/OS user ID must be defined in RACF or a similar security server.

© Copyright IBM Corp. 1983, 2024

Syntax

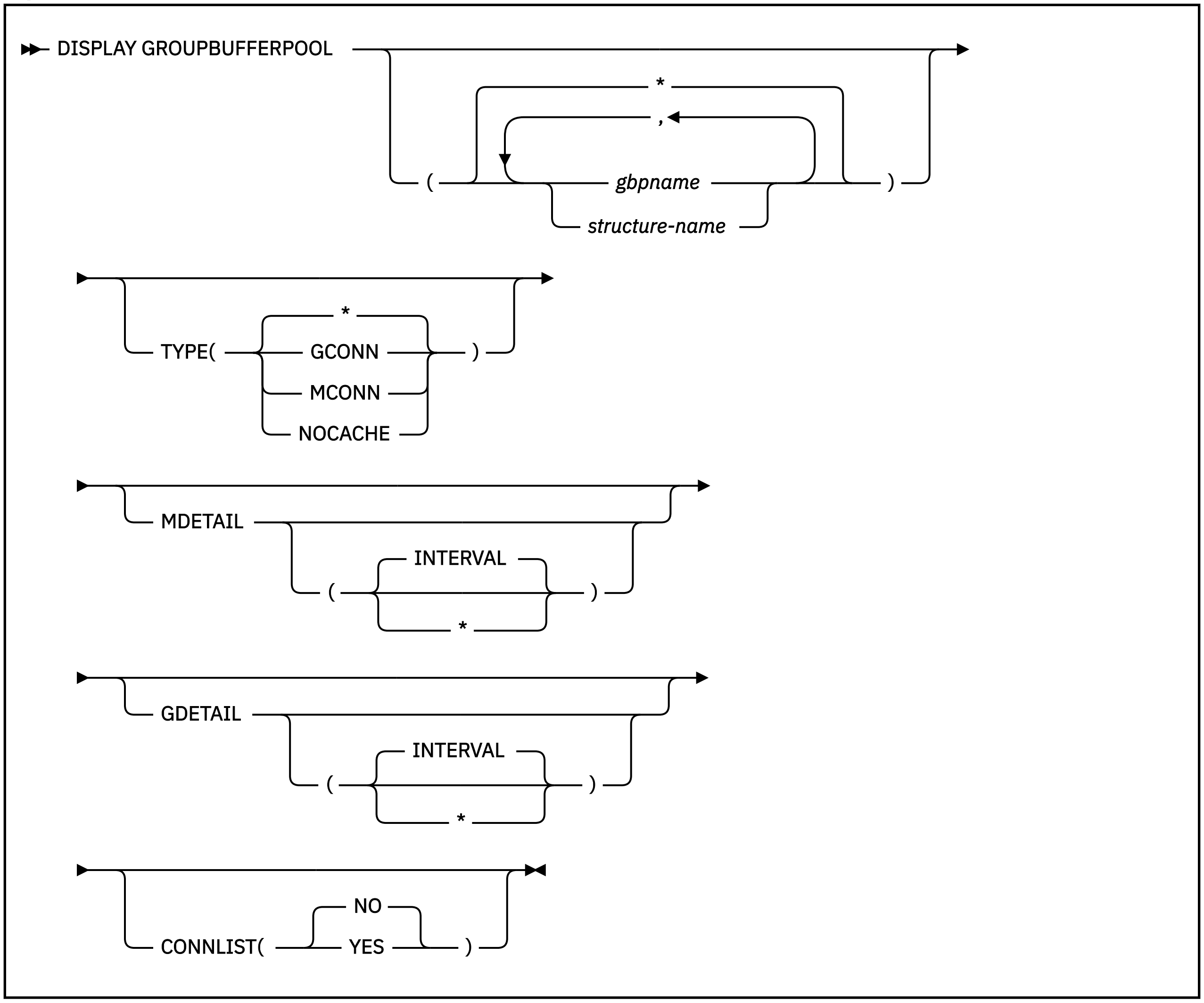

Option description

(*)
Displays the group buffer pool status for all group buffer pools.

(*gbpname*)
Names the group buffer pool for which status is to be displayed.

- 4-KB group buffer pools are named GBP0 through GBP49
- 8-KB group buffer pools are named GBP8K0 through GBP8K9
- 16-KB group buffer pools are named GBP16K0 through GBP16K9
- 32-KB group buffer pools are named GBP32K through GBP32K9

(*structure-name*)
Names the backing coupling facility structure for the group buffer pool. The coupling facility structure name has the following format:

```
groupname
_gbpname
```

where *groupname* is the Db2 data sharing group name and the underscore (_) separates *groupname* and *gbpname* .

TYPE

Indicates the type of group buffer pools (among those that are specified) for which information is displayed.

(*)

All group buffer pools are specified. This is the default.

(GCONN)

Group buffer pools that are currently connected to any member of the data sharing group. The connection can be "active" or "failed-persistent".

(MCONN)

Group buffer pools that are currently connected to the member to which the command is directed.

(NOCACHE)

Group buffer pools that have the GBPCACHE attribute set to NO.

MDETAIL

Shows a detailed statistical report for the specified group buffer pools, reflecting the member's activity for each group buffer pool. If the member to which the command is directed has never been actively connected to the group buffer pool, no detail report is shown.

(INTERVAL)

Shows incremental statistics. The values displayed are accumulated since the last MDETAIL(INTERVAL) report for this member, if there was one. This is the default.

(*)

Shows cumulative statistics. The values displayed are accumulated since this member first connected to the group buffer pool.

For more information about using the MDETAIL keyword, see Monitoring group buffer pool delete name requests (Db2 Data Sharing Planning and Administration).

GDETAIL

Shows a detailed statistical report for the specified group buffer pools, reflecting the activity of the entire group for each group buffer pool. If the member to which the command is directed is not actively connected to the group buffer pool, no detail report is shown.

(INTERVAL)

Shows incremental statistics. The values displayed are accumulated since the last GDETAIL(INTERVAL) report, if there was one. This is the default.

(*)

Shows cumulative statistics. The values displayed are accumulated since the group buffer pool was most recently allocated or reallocated.

For more information about using the GDTAIL keyword, see Monitoring storage of the group buffer pool (Db2 Data Sharing Planning and Administration).

CONNLIST

Specifies whether a connection list report is shown for the specified group buffer pools, listing the connection names of the subsystems that are currently connected to the group buffer pools and their connection status.

(NO)

Do not show the connection list report.

(YES)

Show the connection list report.

Output

Message DSNB750I (Db2 Messages) indicates the beginning of the output of the command.

Usage notes

Examples

Trace information for data sharing members

When this command with group scope is issued in a Db2 data sharing member, it also runs on all other active members. IFICID 090 trace records for other group members can show that the same command was issued by the SYSOPR authorization ID from the 016.TLPKN5F correlation ID, in addition to the trace records from the member where the original command was issued. See Command scope in Db2 data sharing (Db2 Data Sharing Planning and Administration).

Example: Displaying a group buffer pool summary report

Issue the following command to issue a summary report for group buffer pool GBP29:

```
-DISPLAY GROUPBUFFERPOOL(GBP29)
```

The output is similar to this output. Message DSNB799I is displayed if the group buffer pool is duplexed and the secondary group buffer pool is currently allocated. If a secondary group buffer pool is not allocated, message DSNB799I is not included in the output.

```
DSNB750I - DISPLAY FOR GROUP BUFFER POOL GBP29 FOLLOWS
DSNB755I - DB2 GROUP BUFFER POOL STATUS
             CONNECTED                                = YES
             CURRENT DIRECTORY TO DATA RATIO          = 5
             PENDING DIRECTORY TO DATA RATIO          = 5
             CURRENT GBPCACHE ATTRIBUTE               = YES
             PENDING GBPCACHE ATTRIBUTE               = YES
DSNB756I -   CLASS CASTOUT THRESHOLD                  = 10,0
             GROUP BUFFER POOL CASTOUT THRESHOLD      = 50%
             GROUP BUFFER POOL CHECKPOINT INTERVAL    = 8 MINUTES
             RECOVERY STATUS                          = NORMAL
             AUTOMATIC RECOVERY                       = Y
DSNB757I - MVS CFRM POLICY STATUS FOR DSNCAT_GBP29    = NORMAL
             MAX SIZE INDICATED IN POLICY             = 2048 KB
             DUPLEX INDICATOR IN POLICY               = ENABLED
             CURRENT DUPLEXING MODE                   = DUPLEX
             ALLOCATED                                = YES
DSNB758I -     ALLOCATED SIZE                         = 2048 KB
               VOLATILITY STATUS                      = VOLATILE
               REBUILD STATUS                         = DUPLEXED
               CFNAME                                 = CACHE01
               CFLEVEL - OPERATIONAL                  = 5
               CFLEVEL - ACTUAL                       = 7
DSNB759I -     NUMBER OF DIRECTORY ENTRIES            = 1950
               NUMBER OF DATA PAGES                   = 389
               NUMBER OF CONNECTIONS                  = 2
DSNB798I - LAST GROUP BUFFER POOL CHECKPOINT
                                          17:08:41 OCT 16, 2011
             GBP CHECKPOINT RECOVERY LRSN             = AF6BBAEF3307
             STRUCTURE OWNER                          = V61B
DSNB799I - SECONDARY GBP ATTRIBUTES
             ALLOCATED SIZE                           = 2048 KB
             VOLATILITY STATUS                        = VOLATILE
             CFNAME                                   = LF01
             CFLEVEL - OPERATIONAL                    = 5
             CFLEVEL - ACTUAL                         = 7
             NUMBER OF DIRECTORY ENTRIES              = 1950
             NUMBER OF DATA PAGES                     = 389
DSNB790I - DISPLAY FOR GROUP BUFFER POOL GBP29 IS COMPLETE
DSN9022I - DSNB1CMD '-DISPLAY GBPOOL' NORMAL COMPLETION
```

Example: Displaying all connections to a group buffer pool

The following command displays a summary report about group buffer pool 29 (GBP29), including all connections to that group buffer pool:

```
-DISPLAY GROUPBUFFERPOOL(GBP29) CONNLIST(YES)
```

The output is similar to this output:

```
DSNB750I - DISPLAY FOR GROUP BUFFER POOL GBP29 FOLLOWS
DSNB755I - DB2 GROUP BUFFER POOL STATUS
             CONNECTED                                = YES
             CURRENT DIRECTORY TO DATA RATIO          = 5
```

```
             PENDING DIRECTORY TO DATA RATIO           = 5
             CURRENT GBPCACHE ATTRIBUTE                = YES
             PENDING GBPCACHE ATTRIBUTE                = YES
DSNB756I -   CLASS CASTOUT THRESHOLD                   = 10,0
             GROUP BUFFER POOL CASTOUT THRESHOLD       = 50%
             GROUP BUFFER POOL CHECKPOINT INTERVAL     = 8 MINUTES
             RECOVERY STATUS                           = NORMAL
             AUTOMATIC RECOVERY                        = Y
DSNB757I - MVS CFRM POLICY STATUS FOR DSNCAT_GBP29     = NORMAL
             MAX SIZE INDICATED IN POLICY              = 2048 KB
             DUPLEX INDICATOR IN POLICY                = ENABLED
             CURRENT DUPLEXING MODE                    = SIMPLEX
             ALLOCATED                                 = YES
DSNB758I -     ALLOCATED SIZE                          = 2048 KB
               VOLATILITY STATUS                       = VOLATILE
               REBUILD STATUS                          = DUPLEXED
               CFNAME                                  = CACHE01
               CFLEVEL - OPERATIONAL                   = 5
               CFLEVEL - ACTUAL                        = 7
DSNB759I -     NUMBER OF DIRECTORY ENTRIES             = 1950
               NUMBER OF DATA PAGES                    = 389
               NUMBER OF CONNECTIONS                   = 2
DSNB798I - LAST GROUP BUFFER POOL CHECKPOINT
                                         17:08:41 OCT 16, 2011
             GBP CHECKPOINT RECOVERY LRSN              = AF6BBAEF3307
             STRUCTURE OWNER                           = V61B
DSNB799I - SECONDARY GBP ATTRIBUTES
             ALLOCATED SIZE                            = 2048 KB
             VOLATILITY STATUS                         = VOLATILE
             CFNAME                                    = LF01
             OPERATIONAL CFLEVEL                       = 5
             ACTUAL CFLEVEL                            = 7
             NUMBER OF DIRECTORY ENTRIES               = 1950
             NUMBER OF DATA PAGES                      = 389
DSNB766I - THE CONNLIST REPORT FOLLOWS
DSNB767I - CONNECTION NAME = DB2_V61B        , CONNECTION STATUS = D
               CONNECTOR'S RELEASE                   =     10100
DSNB767I - CONNECTION NAME = DB2_V61A        , CONNECTION STATUS = D
               CONNECTOR'S RELEASE                   =     10100
DSNB769I - THE CONNLIST REPORT IS COMPLETE
DSNB790I - DISPLAY FOR GROUP BUFFER POOL GBP29 IS COMPLETE
DSN9022I - DSNB1CMD '-DISPLAY GBPOOL' NORMAL COMPLETION
```

Example: Displaying a detailed report for a group buffer pool

Issue the following command to display detailed information about group buffer pool GBP29:

```
-DISPLAY GROUPBUFFERPOOL(GBP29) GDETAIL(*)
```

The output is similar to this output. Message DSNB762I is displayed in the output only if the secondary group buffer pool is allocated.

```
DSNB750I - DISPLAY FOR GROUP BUFFER POOL GBP29 FOLLOWS
DSNB755I - DB2 GROUP BUFFER POOL STATUS
             CONNECTED                                 = YES
             CURRENT DIRECTORY TO DATA RATIO           = 5
             PENDING DIRECTORY TO DATA RATIO           = 5
             CURRENT GBPCACHE ATTRIBUTE                = YES
             PENDING GBPCACHE ATTRIBUTE                = YES
DSNB756I -   CLASS CASTOUT THRESHOLD                   = 10,0
             GROUP BUFFER POOL CASTOUT THRESHOLD       = 50%
             GROUP BUFFER POOL CHECKPOINT INTERVAL     = 8 MINUTES
             RECOVERY STATUS                           = NORMAL
             AUTOMATIC RECOVERY                        = Y
DSNB757I - MVS CFRM POLICY STATUS FOR DSNCAT_GBP29     = NORMAL
             MAX SIZE INDICATED IN POLICY              = 2048 KB
             DUPLEX INDICATOR IN POLICY                = ENABLED
             CURRENT DUPLEXING MODE                    = DUPLEX
             ALLOCATED                                 = YES
DSNB758I -     ALLOCATED SIZE                          = 2048 KB
               VOLATILITY STATUS                       = VOLATILE
               REBUILD STATUS                          = DUPLEXED
               CFNAME                                  = CACHE01
               CFLEVEL - OPERATIONAL                   = 5
               CFLEVEL - ACTUAL                        = 7
DSNB759I -     NUMBER OF DIRECTORY ENTRIES             = 1950
               NUMBER OF DATA PAGES                    = 389
               NUMBER OF CONNECTIONS                   = 2
DSNB798I - LAST GROUP BUFFER POOL CHECKPOINT
                                         17:08:41 OCT 16, 2011
```

```
             GBP CHECKPOINT RECOVERY LRSN              = AF6BBAEF3307
             STRUCTURE OWNER                           = V61B
DSNB799I - SECONDARY GBP ATTRIBUTES
             ALLOCATED SIZE                            = 2048 KB
             VOLATILITY STATUS                         = VOLATILE
             CFNAME                                    = LF01
             OPERATIONAL CFLEVEL                       = 5
             ACTUAL CFLEVEL                            = 7
             NUMBER OF DIRECTORY ENTRIES               = 1950
             NUMBER OF DATA PAGES                      = 389
DSNB783I - CUMULATIVE GROUP DETAIL STATISTICS SINCE 17:08:35 OCT 16,
2011
DSNB784I - GROUP DETAIL STATISTICS
             READS
               DATA RETURNED                           = 4
DSNB785I -     DATA NOT RETURNED
                 DIRECTORY ENTRY EXISTED               = 0
                 DIRECTORY ENTRY CREATED               = 45
                 DIRECTORY ENTRY NOT CREATED           = 0, 0
DSNB786I -   WRITES
               CHANGED PAGES                           = 5
               CLEAN PAGES                             = 0
               FAILED DUE TO LACK OF STORAGE           = 0
             CHANGED PAGES SNAPSHOT VALUE              = 5
DSNB787I -   RECLAIMS
               FOR DIRECTORY ENTRIES                   = 0
               FOR DATA ENTRIES                        = 0
             CASTOUTS                                  = 0
DSNB788I -   CROSS INVALIDATIONS
               DUE TO DIRECTORY RECLAIMS               = 0
               DUE TO WRITES                           = 0
               EXPLICIT                                = 0
DSNB762I - DUPLEXING STATISTICS FOR GBP29-SEC
             WRITES
               CHANGED PAGES                           = 5
               FAILED DUE TO LACK OF STORAGE           = 0
             CHANGED PAGES SNAPSHOT VALUE              = 5
DSNB790I - DISPLAY FOR GROUP BUFFER POOL GBP29 IS COMPLETE
DSN9022I - DSNB1CMD '-DISPLAY GBPOOL' NORMAL COMPLETION
```

Example: Displaying member detail information for a group buffer pool

The following command displays member detail information for group buffer pool GBP29:

```
-DISPLAY GROUPBUFFERPOOL(GBP29) MDETAIL(*)
```

The output is similar to this output. Messages DSNB764I and DSNB793I are displayed in the output only if the secondary group buffer pool is allocated.

```
DSNB750I - DISPLAY FOR GROUP BUFFER POOL GBP29 FOLLOWS
DSNB755I - DB2 GROUP BUFFER POOL STATUS
             CONNECTED                                 = YES
             CURRENT DIRECTORY TO DATA RATIO           = 5
             PENDING DIRECTORY TO DATA RATIO           = 5
             CURRENT GBPCACHE ATTRIBUTE                = YES
             PENDING GBPCACHE ATTRIBUTE                = YES
DSNB756I -   CLASS CASTOUT THRESHOLD                   = 10,0
             GROUP BUFFER POOL CASTOUT THRESHOLD       = 50%
             GROUP BUFFER POOL CHECKPOINT INTERVAL     = 8 MINUTES
             RECOVERY STATUS                           = NORMAL
             AUTOMATIC RECOVERY                        = Y
DSNB757I - MVS CFRM POLICY STATUS FOR DSNCAT_GBP29     = NORMAL
             MAX SIZE INDICATED IN POLICY              = 2048 KB
             DUPLEX INDICATOR IN POLICY                = ENABLED
             CURRENT DUPLEXING MODE                    = DUPLEX
             ALLOCATED                                 = YES
DSNB758I -     ALLOCATED SIZE                          = 2048 KB
               VOLATILITY STATUS                       = VOLATILE
               REBUILD STATUS                          = DUPLEXED
               CFNAME                                  = CACHE01
               CFLEVEL - OPERATIONAL                   = 5
               CFLEVEL - ACTUAL                        = 7
DSNB759I -     NUMBER OF DIRECTORY ENTRIES             = 1950
               NUMBER OF DATA PAGES                    = 389
               NUMBER OF CONNECTIONS                   = 2
DSNB798I - LAST GROUP BUFFER POOL CHECKPOINT
                                          17:08:41 OCT 16, 2011
             GBP CHECKPOINT RECOVERY LRSN              = AF6BBAEF3307
             STRUCTURE OWNER                           = V61B
DSNB799I - SECONDARY GBP ATTRIBUTES
```

```
             ALLOCATED SIZE                            = 2048 KB
             VOLATILITY STATUS                         = VOLATILE
             CFNAME                                    = LF01
             OPERATIONAL CFLEVEL                       = 5
             ACTUAL CFLEVEL                            = 7
             NUMBER OF DIRECTORY ENTRIES               = 1950
             NUMBER OF DATA PAGES                      = 389
DSNB772I - CUMULATIVE MEMBER DETAIL STATISTICS SINCE 17:08:41 OCT 16,
2011
DSNB773I - MEMBER DETAIL STATISTICS
             SYNCHRONOUS READS
               DUE TO BUFFER INVALIDATION
                 DATA RETURNED                         = 0
                 DATA NOT RETURNED                     = 0
DSNB774I -     DUE TO DATA PAGE NOT IN BUFFER POOL
                 DATA RETURNED                         = 0
                 DATA NOT RETURNED                     = 0
DSNB775I -   PREFETCH READS
               DATA NOT RETURNED                       = 0
DSNB789I -    REGISTER PAGE LIST                       = 0
               PAGES RETRIEVED                         = 0
DSNB776I -   SYNCHRONOUS WRITES
               CHANGED PAGES                           = 5
               CLEAN PAGES                             = 0
DSNB777I -   ASYNCHRONOUS WRITES
               CHANGED PAGES                           = 0
               CLEAN PAGES                             = 0
             FAILED WRITES DUE TO LACK OF STORAGE      = 0
             WRITE-AROUND PAGES                        = 0


DSNB778I - CASTOUT THRESHOLDS DETECTED
             FOR CLASSES                               = 0
             FOR GROUP BUFFER POOL                     = 0
           GBP CHECKPOINTS TRIGGERED                   = 0
           PARTICIPATION IN REBUILD                    = 1
DSNB796I - CASTOUTS
             PAGES CASTOUT                             = 0
             UNLOCK CASTOUT                            = 0
             READ CASTOUT CLASS                        = 0
             READ CASTOUT STATISTICS                   = 0
             READ DIRECTORY INFO                       = 0

DSNB797I - OTHER INTERACTIONS
             REGISTER PAGE                             = 0
             UNREGISTER PAGE                           = 0
             DELETE NAME                               = 0
             READ STORAGE STATISTICS                   = 0
             EXPLICIT CROSS INVALIDATIONS              = 0
             ASYNCHRONOUS GBP REQUESTS                = 0
DSNB764I - DUPLEXING STATISTICS FOR GBP29-SEC
             WRITES
               FAILED DUE TO LACK OF STORAGE           = 0
               ASYNC COMPLETION CHECKS                 = 0
DSNB793I -   DELETE NAME LIST                          = 0
             READ CASTOUT STATISTICS                   = 0
             DELETE NAME                               = 0
             OTHER ASYNCHRONOUS GBP REQUESTS           = 0
DSNB790I - DISPLAY FOR GROUP BUFFER POOL GBP29 IS COMPLETE
DSN9022I - DSNB1CMD '-DISPLAY GBPOOL' NORMAL COMPLETION
```

Related tasks

Group buffer pool monitoring with the DISPLAY GROUPBUFFERPOOL command (Db2 Data Sharing Planning and Administration)

Monitoring storage of the group buffer pool (Db2 Data Sharing Planning and Administration)

Related information

DSNB750I (Db2 Messages)

Chapter 28. -DISPLAY LOCATION command (Db2)

The Db2 command DISPLAY LOCATION displays various information about the specified remote locations.

When you specify the DETAIL keyword, information about the numbers of connections with partner locations that have particular attributes are shown, and detailed information about connections owned by Db2 system threads that are communicating with the location might also be shown for each partner location.

The information returned by the DISPLAY LOCATION command reflects a dynamic status. By the time the information is displayed, it is possible that the status has changed.

Abbreviation: -DIS LOC

Environment

This command can be issued from a z/OS console, a DSN session under TSO, a DB2I panel (DB2 COMMANDS), an IMS or CICS terminal, or a program using the instrumentation facility interface (IFI).

Data sharing scope: Member

Authorization

To execute this command, you must use a privilege set of the process that includes one of the following privileges or authorities:

- DISPLAY privilege
- System DBADM authority
- SYSOPR authority
- SYSCTRL authority
- SYSADM authority

Db2 commands that are issued from a logged-on z/OS console or TSO SDSF can be checked by Db2 authorization using primary and secondary authorization IDs. A logged-on z/OS user ID must be defined in RACF or a similar security server.

Syntax

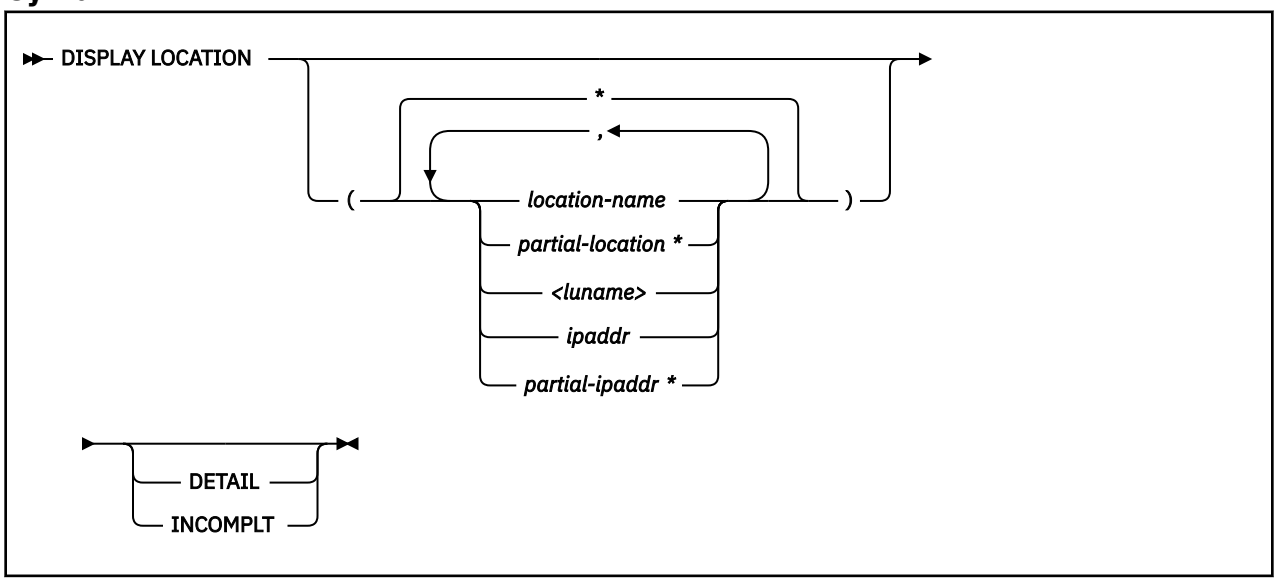

© Copyright IBM Corp. 1983, 2024

Option descriptions

(*)
Displays information for all remote locations.

(*location-name*)
Lists one or more location names, separated by commas.

Because Db2 does not receive a location name from requesters that are not Db2 for z/OS subsystems, you can enter the LUNAME or IP address of such a requester. Refer to the option descriptions for the **< *luname* >** and **(*ipaddr*)** options for more information about using the LUNAME or IP address to specify a requester that is not a Db2 for z/OS subsystem.

(*partial-location)**
Selects all location names that begin with the string *partial-location* and can end with any string, including the empty string. For example, LOCATION(ABC*) selects all location names that begin with the string 'ABC'.

< *luname* >
Requests information about the remote clients that are connected to DDF through the remote SNA LU that is specified. Enclose the LU name in the less-than (<) and greater-than (>) symbols. For example, DISPLAY LOCATION(<LULA>) displays information about a remote location (that is not Db2 for z/OS) with the LU name of LULA.

You can use an asterisk (*) when specifying an LU name in the same manner as previously described for specifying a partial-location name. For example, DISPLAY LOCATION(<LULA*) selects all remote locations (that are not Db2 for z/OS) with an LU name that begins with the string 'LULA'.

(*ipaddr*)
Requests information about the clients that are connected to DDF through the remote TCP/IP host. Enter the IP address. For example, DISPLAY LOCATION(::FFFF:124.63.51.17) displays information about clients at the remote TCP/IP host whose dotted decimal IP address is 124.63.51.17.

(*partial-ipaddr)**
Selects all remote TCP/IP hosts with IP addresses that begin with string *partial-ipaddr* and end with any string, including the empty string. For example, LOCATION(::FFFF:9.65.*) selects all remote TCP/IP hosts with IP addresses that begin with the string '::FFFF:9.65.'.

DETAIL
Displays additional information about conversation activity for Db2 system threads.

INCOMPLT
Displays only locations that had incomplete connections with Db2, including the total number of connections from each location that were terminated for being incomplete since DDF started. The count for each location is reset only if DDF is stopped and restarted.

Output

Message DSNL200I (Db2 Messages) indicates the beginning of the output of the command.

Examples

Example: Displaying information about threads and conversations with specific remote locations
The following command displays information about threads and conversations with remote locations LUND1, LUND2, and LUND3.

```
DISPLAY LOCATION(LUND1,LUND2,LUND3)
```

The output looks similar to this output:

```
DSNL200I  @ DISPLAY LOCATION REPORT FOLLOWS-
LOCATION                                        PRDID    T ATT CONNS
```

```
LUND1                                          DSN12015 R          1
LUND2                                          DSN12015 R          1
LUND2                                          DSN12015 S          1
LUND3                                          DSN12015 R          1
LUND3                                          DSN12015 S          3
DISPLAY LOCATION REPORT COMPLETE
```

Example: Displaying information about conversations and threads with all remote locations

The following command displays detailed information about conversations with all remote locations, and detail conversation information about Db2 system threads that communicate with other locations.

```
-DISPLAY LOCATION DETAIL
```

The output looks similar to this output:

```
DSNL200I  @ DISPLAY LOCATION REPORT FOLLOWS-
DSNL200I  @ DISPLAY LOCATION REPORT FOLLOWS-
LOCATION                                       PRDID    T ATT CONNS
LUND1                                          DSN12015 R          1
LUND2                                          DSN12015 R          1
LUND2                                          DSN12015 S          1
 L203-SYSTASK   SESSID            A ST TIME
 L204-RESYNC    E15FDE02D310FB84  N R  0820914411184
LUND3                                          DSN12015 R          1
LUND3                                          DSN12015 S          3
 L203-SYSTASK   SESSID            A ST TIME
 L204-RESYNC    E15FDE02D310FB87  W R  0820914411187
 L204-RESYNC    E15FDE02D310FB88  W R  0820914411188
 L204-RESYNC    E15FDE02D310FB89  W R  0820914411189

DISPLAY LOCATION REPORT COMPLETE
DISPLAY LOCATION REPORT COMPLETE
```

Example: Displaying information about a connection with DRDA partner sites:

Suppose that a Db2 system is connected with the following DRDA partners:

- A non-z/OS server via TCP/IP IPv4.
- Several TCP/IP clients from the same TCP/IP host as the server.
- A Db2 for z/OS server via SNA.
- A Db2 for z/OS client via TCP/IP IPv6.

The output from the following command shows information about those DRDA partners:

```
-DISPLAY LOCATION(*)
```

The output is similar to the following output:

```
DSNL200I  @ DISPLAY LOCATION REPORT FOLLOWS-
LOCATION                                       PRDID    T ATT CONNS
::FFFF:124.63.51.17..50000                     SQL09073 R          3
::FFFF:124.63.51.17                            SQL09073 S         15
LULA                                           DSN12015 S          1
2002:91E:610:1::5                              DSN12015 S          1
```

Example: Display information about a trusted connection:

Suppose that there is trusted connection to location ::FFFF:9.30.115.135. You issue the following command:

```
-DIS LOC DET
```

A value of TRS in the ATT field indicates that a connection is trusted, as shown in the following example:

```
DSNL200I  @ DISPLAY LOCATION REPORT FOLLOWS-
LOCATION                                       PRDID    T ATT CONNS
::FFFF:9.30.115.135                            DSN12015 R          1
                                                          TRS      1
::FFFF:9.30.115.135                            DSN12015 S          1
```

```
                                                          TRS      1
DISPLAY LOCATION REPORT COMPLETE
```

Example: Display information for a location that has secondary connections to a server:
Suppose that a distributed application is using enhanced continuous block fetch to access data on a server. The requester has opened a secondary connection for each cursor in the application. You issue the following command at the server:

```
-DB2A DIS LOC DET
```

The following output is displayed:

```
DSNL200I  -DB2A DISPLAY LOCATION REPORT FOLLOWS-
LOCATION                                      PRDID    T ATT CONNS
::FFFF:127.0.0.1                              DSN12015 S          1
                                                         CBF      1
DISPLAY LOCATION REPORT COMPLETE
```

A value of CBF in the ATT field indicates that the thread from location ::FFFF:127.0.0.1 is associated with a secondary connection.

If you enter the same command at the requester, the following output is displayed:

```
DSNL200I  -DB2B DISPLAY LOCATION REPORT FOLLOWS-
LOCATION                                      PRDID    T ATT CONNS
::FFFF:127.0.0.1..446                         DSN12015 R          1
                                                         CBF      1
DISPLAY LOCATION REPORT COMPLETE
```

A value of CBF in the ATT field indicates that the thread to location ::FFFF:127.0.0.1..446 is associated with a secondary connection.

Example: Display location information. The remote location is a Db2 Connect server gateway:
You issue the following command at the server:

```
-DB2A DIS LOC
```

The following output is displayed:

```
DSNL200I  -DB2A DISPLAY LOCATION REPORT FOLLOWS-
LOCATION                                      PRDID    T ATT CONNS
::FFFF:9.23.2.248                             SQL09019 G          1

DISPLAY LOCATION REPORT COMPLETE
```

The location in the report has a G value in the T column when the PRDID value begins with "SQL" and the client has indicated to Db2 for z/OS that it is a Db2 Connect server gateway.

Example: Display location information. The remote location is a Db2 for z/OS subsystem that reports a functional level:
You issue the following command at the server:

```
-DB2A DIS LOC
```

The following output is displayed:

```
DSNL200I  -DB2A DISPLAY LOCATION REPORT FOLLOWS-
LOCATION                                      PRDID    T ATT CONNS
SYEC1B                                        DSN12015 S          1
 L209-FUNCTIONAL LEVEL=V12R1M500
DISPLAY LOCATION REPORT COMPLETE
```

The functional level is the same as the application compatibility level of the requester, in the format V12R1M*nnn*.

Example: Display location information. The remote location uses an IBM Data Server Driver for JDBC and SQLJ that reports a functional level:

You issue the following command at the server:

```
-DB2A DIS LOC
```

The following output is displayed:

```
DSNL200I  -DB2A DISPLAY LOCATION REPORT FOLLOWS-
LOCATION                                      PRDID    T ATT CONNS
::FFFF:9.30.222.67                            JCC04220 S          1
 L209-FUNCTIONAL LEVEL=29
DISPLAY LOCATION REPORT COMPLETE
```

The IBM Data Server Driver for JDBC and SQLJ version is in the form *major-version.minor-version.build-number*. The functional level is *build-number*. In this example, the driver version is 4.22.29, so the functional level is 29.

Example: Display location information. The remote location uses an IBM Data Server Driver for CLI and ODBC that reports a functional level:

You issue the following command at the server:

```
-DB2A DIS LOC
```

The following output is displayed:

```
DSNL200I  -DB2A DISPLAY LOCATION REPORT FOLLOWS-
LOCATION                                      PRDID    T ATT CONNS
::FFFF:9.30.222.67                            SQL11010 S          1
 L209-FUNCTIONAL
LEVEL=S1612011300
DISPLAY LOCATION REPORT COMPLETE
```

The functional level is the build level for the Db2 for Linux, UNIX, and Windows client.

Example: Display locations with incomplete connections to Db2

You issue the following command at the server:

```
-DISPLAY LOCATION INCOMPLT
```

The following output is displayed:

```
DSNL200I -DB2A DISPLAY LOCATION REPORT FOLLOWS-
       LOCATION                   CONNS
       ::10.1.43.29                   47
       ::10.1.24.149                  60
       ::10.1.28.42                    2
       ::10.1.54.128                  62
       ::10.1.54.132                  30
       ::10.1.54.237                   1
       ::10.1.54.242                 108
       ::10.1.54.244                 575
       ::10.1.54.250                 884
       ::10.1.57.136                   3
       ::10.1.58.43                   21
       ::10.1.64.26                    1
       ::10.1.67.185                   1
       ::192.168.1.219                 1
       ::192.168.1.25                  1
       ::192.168.1.77                  1
       ::192.168.1.57                  1
 DISPLAY LOCATION REPORT COMPLETE
```

Related tasks

Displaying information about connections with other locations (Db2 Administration Guide)

Related information

DSNL200I (Db2 Messages)

Chapter 29. -DISPLAY LOG (Db2)

The Db2 command DISPLAY LOG displays log information about the status of the offload task, the current checkpoint scheduling parameters, and the current active log data sets.

Abbreviation: DIS LOG

Environment

This command can be issued from a z/OS console, a DSN session under TSO, a DB2I panel (DB2 COMMANDS), an IMS or CICS terminal, or a program using the instrumentation facility interface (IFI).

Data sharing scope: Member

Authorization

To execute this command, you must use a privilege set of the process that includes one of the following privileges or authorities:

- DISPLAY privilege
- System DBADM authority
- SYSOPR authority
- SYSCTRL authority
- SYSADM authority

Db2 commands that are issued from a logged-on z/OS console or TSO SDSF can be checked by Db2 authorization using primary and secondary authorization IDs. A logged-on z/OS user ID must be defined in RACF or a similar security server.

Syntax

```
►►─ DISPLAY LOG ─►◄
```

Usage notes

Information provided by the DISPLAY LOG command : You can use the DISPLAY LOG command to view the current checkpoint scheduling parameters and information about the current active log data sets and status of the offload task. You can obtain additional information about log data sets and checkpoint information by using the Print Log Map utility (DSNJU004).

Output

Message DSNJ370I (Db2 Messages) indicates the beginning of the output of the command.

Examples

Example: Displaying log information

The following command displays information about the log and the status of any offload tasks.

```
-DISPLAY LOG
```

© Copyright IBM Corp. 1983, 2024

The output is similar to the following output:

```
DSNJ370I  -DT21 DSNJC00A LOG DISPLAY
CURRENT COPY1 LOG = DSNT2LOG.DT21.LOGCOPY1.DS07 IS 1% FULL
CURRENT COPY2 LOG = DSNT2LOG.DT21.LOGCOPY2.DS07 IS 1% FULL
          H/W RBA = 00000000405786F04E81
          H/O RBA = 00000000405772A28FFF
          FULL LOGS TO OFFLOAD = 0 OF 16
          OFFLOAD TASK IS (AVAILABLE)
          SOFTWARE ACCELERATION IS DISABLED
          ZHYPERLINK WRITE IS ENABLED
            LAST LOG WRITE FOR COPY1 USED ZHYPERLINK
            LAST LOG WRITE FOR COPY2 USED ZHYPERLINK
DSNJ371I  -DT21 DB2 RESTARTED 15:53:15 OCT 15, 2021
          RESTART RBA 00000000405784649000
          CHECKPOINT FREQUENCY 2 MINUTES
          LAST SYSTEM CHECKPOINT TAKEN 16:53:35 OCT 15, 2021
DSN9022I  -DT21 DSNJC001 '-DIS LOG' NORMAL COMPLETION
```

The output provides the following information:

- The COPY1 active log data set is 1% full. The COPY2 active log data set is 1% full. If you are running dual logs and the percentages are different, the log data sets are of different sizes. Db2 switches both active logs when one reaches the end of the file. This can result in unused active log space if one log data set is larger than the other.
- Db2 was started at 15:53:35 on October 15, 2021, and began logging at RBA 00000000405784649000.
- Software acceleration is disabled for peer-to-peer remote copy.
- Db2 zparm ZHYPERLINK is enabled for active logs.
- If the ZHYPERLINK Db2 system parameter is set to ENABLE or ACTIVELOG, DFSMS does a zhyperwrite implicitly, even if the REMOTE_COPY_SW_ACCEL Db2 system parameter is not enabled.
- Last log writes for COPY1 and COPY2 were done successfully using zHyperLink. To use zHyperLink Write for Db2, make sure that Db2 zparm ZHYPERLINK=ENABLE or ZHYPERLINK=ACTIVELOG and all the other hardware and DFSMS requirements are applied.

Example: Displaying log information in a GDPS® Continuous Availability with zero data loss (GDPS Continuous Availability with zero data loss) environment

Issue `-DISPLAY LOG` on a member of the source data sharing group in a GDPS Continuous Availability with zero data loss environment. Output like this is displayed. Message DSNJ375I indicates that the compression dictionary data set (CDDS) is in source mode.

```
DSNJ370I  - DSNJC00A LOG DISPLAY
CURRENT COPY1 LOG = DSNC000.DB2A.LOGCOPY1.DS02 IS 1% FULL
CURRENT COPY2 LOG = INACTIVE IS 0% FULL
          H/W RBA = 000000000000471C3CD0
          H/O RBA = 00000000000000000000
          FULL LOGS TO OFFLOAD = 0 OF 3
          OFFLOAD TASK IS (AVAILABLE)
          SOFTWARE ACCELERATION IS DISABLED
          ZHYPERLINK WRITE IS ENABLED
            LAST LOG WRITE FOR COPY1 USED ZHYPERLINK
DSNJ371I  - DB2 RESTARTED 11:22:42 DEC 28, 2018
          RESTART RBA 000000000000471B7000
          CHECKPOINT FREQUENCY 1000 LOGRECORDS
          LAST SYSTEM CHECKPOINT TAKEN 11:22:46 DEC 28, 2018
DSNJ375I  - DSNJC00A CDDS DSNAME = TEST.CDDS IS ACTIVE IN
          SOURCE MODE.
DSN9022I  - DSNJC001 '-DIS LOG' NORMAL COMPLETION
```

Issue `-DISPLAY LOG` on a member of the proxy data sharing group in a GDPS Continuous Availability with zero data loss environment. Output like this is displayed. Message DSNJ375I indicates that the compression dictionary data set (CDDS) is in proxy mode.

```
DSNJ370I  - DSNJC00A LOG DISPLAY
CURRENT COPY1 LOG = DSNC000.DB2C.LOGCOPY1.DS02 IS 1% FULL
CURRENT COPY2 LOG = INACTIVE IS 0% FULL
...
```

```
DSNJ371I  - DB2 RESTARTED 11:26:13 DEC 28, 2018
          RESTART RBA 00000000000000024000
          CHECKPOINT FREQUENCY 1000 LOGRECORDS
          LAST SYSTEM CHECKPOINT TAKEN 11:26:20 DEC 28, 2018
DSNJ375I  - DSNJC00A CDDS DSNAME = TEST.CDDS IS ACTIVE IN
          PROXY MODE.
DSN9022I  - DSNJC001 '-DIS LOG' NORMAL COMPLETION
```

FL 502 Example: Displaying log information about an encrypted data set

Output like this is displayed for encrypted log data sets:

```
-DT41DIS LOG
DSNJ370I  -DT41 DSNJC00A LOG DISPLAY
CURRENT COPY1 LOG = DSNT4LOG.DT41.LOGCOPY1.DS02 IS 92% FULL
KEY LABEL = DB2LOGKEY01
CURRENT COPY2 LOG = DSNT4LOG.DT41.LOGCOPY2.DS02 IS 92% FULL
KEY LABEL = DB2LOGKEY01
         H/W RBA = 00000000427C46F74A97
         H/O RBA = 00000000427BCE396FFF
         FULL LOGS TO OFFLOAD = 0 OF 10
         OFFLOAD TASK IS (AVAILABLE)
         SOFTWARE ACCELERATION IS DISABLED
         ZHYPERLINK WRITE IS ENABLED
           LAST LOG WRITE FOR COPY1 USED ZHYPERLINK
           LAST LOG WRITE FOR COPY2 USED ZHYPERLINK
DSNJ371I  -DT41 DB2 RESTARTED 16:28:13 OCT 20, 2021
         RESTART RBA 00000000427BB845E000
         CHECKPOINT FREQUENCY 2 MINUTES OR 500000 LOGRECORDS
         LAST SYSTEM CHECKPOINT TAKEN 17:04:26 OCT 20, 2021
DSN9022I  -DT41 DSNJC001 '-DIS LOG' NORMAL COMPLETION
```

Chapter 30. -DISPLAY ML command (Db2)

The Db2 command DISPLAY ML displays the current status of IBM Db2 AI for z/OS.

Abbreviation: -DIS ML

Environment

This command can be issued from a z/OS console, a DSN session under TSO, a DB2I panel (DB2 COMMANDS), an IMS or CICS terminal, or a program using the instrumentation facility interface (IFI).

Data sharing scope: Member

Authorization

To execute this command, you must use a privilege set of the process that includes one of the following authorities:

- SQLADM authority
- System DBADM authority
- SYSOPR authority
- SYSCTRL authority
- SYSADM authority

Db2 commands that are issued from a logged-on z/OS console or TSO SDSF can be checked by Db2 authorization using primary and secondary authorization IDs. A logged-on z/OS user ID must be defined in RACF or a similar security server.

Output

Message DSNX611I indicates the beginning of the output of the command.

Syntax

```
►►─ DISPLAY ML ─►◄
```

Examples

Example: Displaying the current status of IBM Db2 AI for z/OS

The following command displays the current status of IBM Db2 AI for z/OS.

```
-DISPLAY ML
```

When IBM Db2 AI for z/OS has never been activated since the Db2 subsystem was started or restarted, the output is similar to the following.

```
-DB2ADIS ML
 DSNX611I  -DB2A DSNXODPM DISPLAY ML REPORT FOLLOWS: 820
            STATUS                          = STOPPED
            SQL OPTIMIZATION                = STOPPED
            SYSTEM ASSESSMENT &
            DISTRIBUTED CONNECTION CONTROL = STOPPED
            DISPLAY ML REPORT COMPLETE.
 DSN9022I  -DB2A DSNXODPM 'DISPLAY ML' NORMAL COMPLETION
```

© Copyright IBM Corp. 1983, 2024

When IBM Db2 AI for z/OS is inactive, the output is similar to the following.

```
-DB2ADIS ML
 DSNX611I  -DB2A DSNXODPM DISPLAY ML REPORT FOLLOWS: 840
            STATUS                          = STARTED
              - ML Daemon                      : MLZD   > RUNNING
              - Db2ZAI Table Cleanup           : MLTBCL > NOT RUNNING
            SQL OPTIMIZATION                = STARTED
              - Execution History Pushout      : MLQEHP > NOT RUNNING
              - AccessPath History Pushout     : MLQAHP > NOT RUNNING
              - HV/OFNR Simple Model Training : MLSIM  > NOT RUNNING
              - Package Automation             : MLPACK > NOT RUNNING
              - Performance Data Processing    : MLPERF > NOT RUNNING
              - Dynamic Sql Monitoring         : MLDSMN > NOT RUNNING
            SYSTEM ASSESSMENT &
            DISTRIBUTED CONNECTION CONTROL = STARTED
              - ML Generating Metrics          : MLMETX > NOT RUNNING
            DISPLAY ML REPORT COMPLETE.
 DSN9022I  -DB2A DSNXODPM 'DISPLAY ML' NORMAL COMPLETION
```

Note: Even when IBM Db2 AI for z/OS is inactive, the state of the ML daemon will indicate that it is RUNNING. The ML daemon is one of the IBM Db2 AI for z/OS daemons that monitors the state of IBM Db2 AI for z/OS and this daemon is expected to be in RUNNING state regardless of the status of IBM Db2 AI for z/OS.

When IBM Db2 AI for z/OS is active, the output is similar to the following output.

```
-DB2ADIS ML
 DSNX611I  -DB2A DSNXODPM DISPLAY ML REPORT FOLLOWS: 840
            STATUS                          = STARTED
              - ML Daemon                      : MLZD   > RUNNING
              - Db2ZAI Table Cleanup           : MLTBCL > RUNNING
            SQL OPTIMIZATION                = STARTED
              - Execution History Pushout      : MLQEHP > RUNNING
              - AccessPath History Pushout     : MLQAHP > RUNNING
              - HV/OFNR Simple Model Training : MLSIM  > RUNNING
              - Package Automation             : MLPACK > RUNNING
              - Performance Data Processing    : MLPERF > RUNNING
              - Dynamic Sql Monitoring         : MLDSMN > RUNNING
            SYSTEM ASSESSMENT &
            DISTRIBUTED CONNECTION CONTROL = STARTED
              - ML Generating Metrics          : MLMETX > RUNNING
            DISPLAY ML REPORT COMPLETE.
 DSN9022I  -DB2A DSNXODPM 'DISPLAY ML' NORMAL COMPLETION
```

Related reference

"-START ML command (Db2)" on page 491
The Db2 command START ML starts the Db2 functions used by IBM Db2 AI for z/OS.

"-STOP ML command (Db2)" on page 551
The Db2 command STOP ML stops the Db2 functions used by IBM Db2 AI for z/OS, if IBM Db2 AI for z/OS has already been started.

Related information

DSN611Icsect DISPLAY ML REPORT FOLLOWS: STATUS=action-state DISPLAY ML REPORT COMPLETE

Chapter 31. -DISPLAY PROCEDURE command (Db2)

The Db2 command DISPLAY PROCEDURE displays statistics about stored procedures that are accessed by Db2 applications.

This command displays one line of output for each stored procedure that a Db2 application has accessed. You can qualify stored procedure names with a schema name.

The information returned by the DISPLAY PROCEDURE command reflects a dynamic status. By the time the information is displayed, it is possible that the status could have changed.

Abbreviation: -DIS PROC

Environment

This command can be issued from a z/OS console, a DSN session under TSO, a DB2I panel (DB2 COMMANDS), an IMS or a CICS terminal, or a program using the instrumentation facility interface (IFI).

Data sharing scope: Group or member

Authorization

To run this command, you must use a privilege set of the process that includes one of the following privileges or authorities:

- DISPLAY privilege
- System DBADM authority
- SYSOPR authority
- SYSCTRL authority
- SYSADM authority

If you specify DISPLAY PROCEDURE *.* or *schema.partial-name* *, the privilege set of the process must include one of the following authorities:

- SYSOPR authority
- SYSCTRL authority
- SYSADM authority

Db2 commands that are issued from a logged-on z/OS console or TSO SDSF can be checked by Db2 authorization using primary and secondary authorization IDs. A logged-on z/OS user ID must be defined in RACF or a similar security server.

If you are using an external security product to authorize usage of DISPLAY PROCEDURE, define SYSOPR as a user to the external security product for those cases in which DISPLAY PROCEDURE SCOPE(GROUP) runs on a remote system and SYSOPR is used as the authorization ID.

© Copyright IBM Corp. 1983, 2024

Syntax

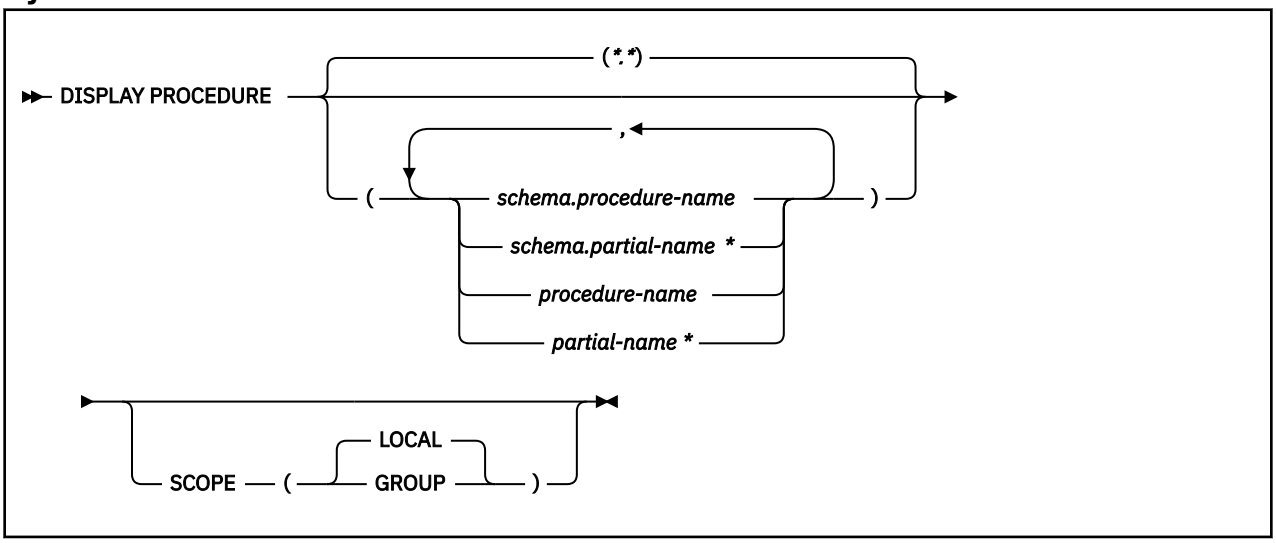

Option descriptions

(*.*)
Displays information for all stored procedures in all schemas that Db2 applications have accessed since Db2 was started.

(*schema.procedure-name*)
Displays the specified stored procedure in the specified schema.

(*schema.partial-name* *)
Displays a set of stored procedures in the specified schema that Db2 applications have accessed since Db2 was started. The names of all procedures in the set begin with *partial-name* and can end with any string, including the empty string. For example, PAYROLL.ABC* displays information for all stored procedure names beginning with ABC in the PAYROLL schema.

(*procedure-name*)
Displays one or more specific stored procedure names in the SYSPROC schema. If no procedures are named, Db2 displays information for all stored procedures that have been accessed by Db2 applications.

(*partial-name* *)
Displays information for a set of stored procedures in the SYSPROC schema that Db2 applications have accessed since Db2 was started. The names of all procedures in the set begin with *partial-name* and can end with any string, including the empty string. For example, ABC* displays information for all stored procedures in the SYSPROC schema with names that begin with ABC.

SCOPE
Specifies the scope of the command.

(LOCAL)
Specify to display information about procedures on the local member only.

(GROUP)
Specify to display information about procedures on all members of the data sharing group.

Output

Message DSNX940I (Db2 Messages) indicates the beginning of the output of the command.

Usage notes

Displaying native SQL procedures

Native SQL procedures are not displayed in the DISPLAY PROCEDURE output unless you run the procedures in DEBUG mode. If you run a procedure in DEBUG mode, the WLM environment column in the output contains the WLM ENVIRONMENT FOR DEBUG that you specified when you created the native SQL procedure.

The DISPLAY PROCEDURE output shows the statistics of a native SQL procedure as 0 if the STOP PROCEDURE command is processing the native SQL procedure.

Trace information for commands issued with group scope

If this command is issued with options that specify group scope in a Db2 data sharing member, it also runs on all other active members. IFICID 090 trace records for other group members can show that the same command was issued by the SYSOPR authorization ID from the 016.TLPKN5F correlation ID, in addition to the trace records from the member where the original command was issued. See Command scope in Db2 data sharing (Db2 Data Sharing Planning and Administration).

Examples

Example: Displaying information about all stored procedures that have been accessed

The following command displays information about all stored proceduresthat applications have accessed in a Db2 subsystem.

```
-DISPLAY PROCEDURE
```

The output is similar to the following output:

```
DSNX940I = DSNX9DIS DISPLAY PROCEDURE REPORT FOLLOWS-

------ SCHEMA=SYSPROC
PROCEDURE      STATUS    ACTIVE    QUED  MAXQ  TIMEOUT  FAIL   WLM_ENV
USERPRC1       STARTED     0         0     1      0       0    SANDBOX
USERPRC2       STOPQUE     0         5     5      3       0    SANDBOX
USERPRC3       STARTED     2         0     6      0       0    SANDBOX
USERPRC4       STOPREJ     0         0     1      0       0    SANDBOX
DSNX9DIS DISPLAY PROCEDURE REPORT COMPLETE
DSN9022I = DSNX9COM '-DISPLAY PROC' NORMAL COMPLETION
```

Example: Displaying information about a specific stored procedure

The following command displays information about stored procedures USERPRC2 and USERPRC4 in the SYSPROC schema. The SYSPROC schema is the default schema if the schema name is not explicitly specified.

```
-DISPLAY PROCEDURE(USERPRC2,USERPRC4)
```

The output is similar to the following output:

```
DSNX940I = DSNX9DIS DISPLAY PROCEDURE REPORT FOLLOWS-

------ SCHEMA=SYSPROC
PROCEDURE      STATUS    ACTIVE    QUED  MAXQ  TIMEOUT  FAIL   WLM_ENV
USERPRC2       STOPQUE     0         5     5      3      0     SANDBOX
USERPRC4       STOPREJ     0         0     1      0      0     SANDBOX
DSNX9DIS DISPLAY PROCEDURE REPORT COMPLETE
DSN9022I = DSNX9COM '-DISPLAY PROC' NORMAL COMPLETION
```

Example: Displaying information about all stored procedures in specified schemas

The following command displays information about all stored procedures in the PAYROLL schema and in the HRPROD schema:

```
-DISPLAY PROCEDURE(PAYROLL.*,HRPROD.*)
```

The output is similar to the following output.

```
DSNX940I = DSNX9DIS DISPLAY PROCEDURE REPORT FOLLOWS-

------ SCHEMA=PAYROLL
PROCEDURE      STATUS    ACTIVE    QUED  MAXQ  TIMEOUT  FAIL   WLM_ENV
PAYPRC1        STARTED     0         0     1      0      0     PAYROLL
PAYPRC2        STOPQUE     0         5     5      3      0     PAYROLL
PAYPRC3        STARTED     2         0     6      0      0     PAYROLL
USERPRC4       STOPREJ     0         0     1      0      0     SANDBOX

------ SCHEMA=HRPROD
PROCEDURE      STATUS    ACTIVE    QUED  MAXQ  TIMEOUT  FAIL   WLM_ENV
HRPRC1         STARTED     0         0     1      0      0     HRPROCS
HRPRC2         STOPREJ     0         0     1      0      0     HRPROCS
DSNX9DIS DISPLAY PROCEDURE REPORT COMPLETE
DSN9022I = DSNX9COM '-DISPLAY PROC' NORMAL COMPLETION
```

Example: Displaying information about stopped procedures

Suppose that all stored procedures in schema SYSADM that begin with the characters "SP" have been stopped. The following command displays information about those stored procedures.

```
-DISPLAY PROCEDURE(SYSADM.SP*)
```

The output is similar to the following output.

```
DSNX940I = DSNX9DIS DISPLAY PROCEDURE REPORT FOLLOWS-

------ SCHEMA=SYSADM
PROCEDURE      STATUS    ACTIVE    QUED  MAXQ  TIMEOUT  FAIL   WLM_ENV
SPC1           STOPQUE     0         0    0      0       0     WLMENV1
SPC2           STOPQUE     0         0    0      0       0     WLMENV3
DSNX9DIS PROCEDURES SP - SP* STOP QUEUE
DSNX9DIS DISPLAY PROCEDURE REPORT COMPLETE
DSN9022I = DSNX9COM '-DISPLAY PROC' NORMAL COMPLETION
```

Chapter 32. -DISPLAY PROFILE command (Db2)

The DISPLAY PROFILE command allows you to determine if profiling is active or inactive

Abbreviation: -DIS PROFILE

Environment

This command can be issued from the z/OS console, through a batch job or the instrumentation facility interface (IFI). However, in general, this command is intended for use by tools.

Data sharing scope: Member

Authorization

To execute this command, you must use a privilege set of the process that includes one of the following authorities:

- SQLADM authority
- System DBADM authority
- SYSOPR authority
- SYSCTRL authority
- SYSADM authority

Syntax

```
►►─ DISPLAY PROFILE ─►◄
```

Examples

The following command displays the status of active and inactive profiling activities.

```
-DISPLAY PROFILE
```

Output

Message DSNT753I (Db2 Messages) indicates the beginning of the output of the command.

© Copyright IBM Corp. 1983, 2024

Chapter 33. -DISPLAY RLIMIT command (Db2)

The Db2 command DISPLAY RLIMIT displays the current status of the resource limit facility (governor).

If the facility has already been started, DISPLAY RLIMIT also displays the ID of the resource limit specification table or the resource limit middleware table that is being used.

Abbreviation: -DIS RLIM

Environment

This command can be issued from a z/OS console, a DSN session, a DB2I panel (DB2 COMMANDS), an IMS or CICS terminal, or a program using the instrumentation facility interface (IFI).

Data sharing scope: Member

Authorization

To execute this command, you must use a privilege set of the process that includes one of the following authorities:

- System DBADM authority
- SYSOPR authority
- SYSCTRL authority
- SYSADM authority

Db2 commands that are issued from a logged-on z/OS console or TSO SDSF can be checked by Db2 authorization using primary and secondary authorization IDs. A logged-on z/OS user ID must be defined in RACF or a similar security server.

Output

Message DSNT700I (Db2 Messages) indicates the beginning of the output of the command.

Syntax

```
►►─ DISPLAY RLIMIT ─►◄
```

Examples

Example: Displaying the current status of the resource limit facility

The following command displays the current status of the resource limit facility.

```
-DISPLAY RLIMIT
```

When the resource limit facility is inactive, the output is similar to the following output.

```
DSNT701I - RESOURCE LIMIT FACILITY IS INACTIVE
DSN9022I - DSNTCDIS 'DISPLAY RLIMIT' NORMAL COMPLETION
```

When the resource limit facility is active, the output is similar to the following output.

```
DSNT700I = SYSADM.DSNRLST03 IS THE ACTIVE RESOURCE LIMIT
SPECIFICATION TABLE
DSN9022I = DSNTCDIS 'DISPLAY RLIMIT' NORMAL COMPLETION
```

© Copyright IBM Corp. 1983, 2024

Related concepts

The resource limit facility (Introduction to Db2 for z/OS)

Resource limit facility controls (Db2 Performance)

Related tasks

Setting limits for system resource usage by using the resource limit facility (Db2 Performance)

Related reference

-START RLIMIT command (Db2)

The Db2 command START RLIMIT starts the resource limit facility (governor) and specifies a resource limit specification table for the facility to use.

-STOP RLIMIT command (Db2)

The Db2 command STOP RLIMIT stops the resource limit facility.

Related information

DSNT700I (Db2 Messages)

Chapter 34. -DISPLAY RESTSVC command (Db2)

The Db2 command DISPLAY RESTSVC displays the status of REST services that exist in Db2.

This command displays one or more lines of output for each REST service that is defined in Db2. You can qualify REST service names with a collection-id.

The information returned by the DISPLAY RESTSVC command reflects a dynamic status. By the time the information is displayed, it is possible that the status could have changed.

Abbreviation: -DIS RESTSVC

Environment

This command can be issued from a z/OS console, a DSN session under TSO, a DB2I panel (Db2 COMMANDS), an IMS or CICS terminal, or a program using the instrumentation facility interface (IFI).

Data sharing scope: Group

Authorization

To execute this command, you must use a privilege set of the process that includes one of the following authorities:

- DISPLAY privilege
- System DBADM authority
- SYSOPR authority
- SYSCTRL authority
- SYSADM authority

If you specify DISPLAY RESTSVC *.*, collection-id.partial-name*, or partial-name*, the privilege set of the process must include one of the following authorities:

- SYSOPR authority
- SYSCTRL authority
- SYSADM authority

Db2 commands that are issued from a logged-on z/OS console or TSO SDSF can be checked by Db2 authorization using primary and secondary authorization IDs. A logged-on z/OS user ID must be defined in RACF or a similar security server.

If you are using an external security product to authorize usage of DISPLAY RESTSVC, define SYSOPR as a user to the external security product for those cases in which DISPLAY RESTSVC SCOPE(GROUP) runs on a remote system and SYSOPR is used as the authorization ID.

© Copyright IBM Corp. 1983, 2024

Syntax

```
►►─ DISPLAY RESTSVC ─┬─(*.*)──────────────────────────────────────────────┬─►
                     │                  ┌──────────────────────────────┐
                     │                  ↓                              │
                     └─(──┬─collection-id.service-name.version-id──┬──┴──)─┘
                          ├─collection-id.service-name─────────────┤
                          ├─collection-id.partial-name*────────────┤
                          ├─service-name───────────────────────────┤
                          └─partial-name*──────────────────────────┘

►─┬─────────────────────────────────────────────────────────────────────────┬─►
  │                   ┌─*─────────┐                   ┌─100─────┐           │
  └─STATUS──(──┬──────┼─STARTED───┼──────)──┘  └─LIMIT──(──┬───────┼──────)──┘
               │      └─STOPREJ───┘                        │integer│
               │                                           └─*─────┘
►─┬─────────────────────────────────────────────────────────────────────────┬─►◄
  │                   ┌──────────────────────────────────────────────┐      │
  └─SCOPE──(──GROUP──┴──)──┘
```

Option descriptions

For mixed case names, use single quotes (') around the input.

(*.*)
Displays the status for all versions of all REST services in all collection-ids. Note: when specified, *.* can be the only RESTSVC parameter.

(collection-id.service-name.version-id)
Displays a specific version of the specified REST service in the specified collection-id.

(collection-id.service-name)
Displays information for all versions of the REST service in the specified collection-id.

(collection-id.partial-name*)
Displays information for all versions of a set of REST services in the specified collection-id. The names of all REST services in the set begin with partial-name and can end with any string, including the empty string. For example, PAYROLL.ABC* starts all REST services with names that begin with ABC in the PAYROLL collection-id.

(service-name)
Displays all versions of the specified REST service in the SYSIBMSERVICE collection-id.

(partial-name*)
Displays all versions in a set of REST services in the SYSIBMSERVICE collection-id. The names of all REST services in the set begin with partial-name and can end with any string, including the empty string. For example, ABC* starts all REST services names that begin with ABC in the SYSIBMSERVICE collection-id.

STATUS

Specifies the status of the services to be displayed.

(*)
Services of any status are displayed.

(STARTED)
Services of the STARTED status are displayed.

(STOPREJ)
Services of the STOPREJ (service is stopped from being invoked with a reject of the request back to the client) are displayed.

LIMIT
Limits the number of services to be displayed by the command.

(integer)
The maximum number of services that are displayed. The default is 100. The maximum number of messages that can be displayed is limited by the space available on the console.

(*)
Limits the display to the space available.

SCOPE
Specifies the scope of the command.

(GROUP)
Specify to display information about REST services on all members of the data sharing group.

Output

Message DSNL601I (Db2 Messages) indicates the beginning of the output of a DISPLAY RESTSVC command. Message DSN9022I (Db2 Messages) will indicate the end of the output of the command if no failure occurred during the processing of the command. Message DSN9023I (Db2 Messages) will indicate the end of the output of the command if an abend had occurred during the processing of the command.

Usage notes

Trace information for data sharing members
When this command with group scope is issued in a Db2 data sharing member, it also runs on all other active members. IFICID 090 trace records for other group members can show that the same command was issued by the SYSOPR authorization ID from the 016.TLPKN5F correlation ID, in addition to the trace records from the member where the original command was issued. See Command scope in Db2 data sharing (Db2 Data Sharing Planning and Administration).

Examples

Example: No authority for a DISPLAY RESTSVC command
The following command attempts to use the DISPLAY RESTSVC command on a service that the user does not have the proper authorities for:

```
-DB2A DIS RESTSVC
```

The output is similar to this output:

```
DSN9016I  -DB2A '-DIS RESTSVC' COMMAND REJECTED, UNAUTHORIZED REQUEST
DSN9023I  -DB2A DSN9SCND '-DIS RESTSVC' ABNORMAL COMPLETION
```

Example: Display a service when specifying the version id
The following command displays version V3 of the SVCWVRSN0300 service in the VRSNTEST002 collection:

```
-DIS RESTSVC(VRSNTEST002.SVCWVRSN0300.V3)
```

The output is similar to this output:

```
DSNL601I  -DB2A DISPLAY RESTSVC REPORT FOLLOWS-
DSNL610I  -DB2A
---- COLLECTION=VRSNTEST002
SERVICE                                     VERSION          STATUS
SVCWVRSN0300                                V3               STARTED*
DSN9022I  -DB2A DSNLJDSS 'DISPLAY RESTSVC' NORMAL COMPLETION
```

Example: Display a service using the wildcard character
The following command displays the services in the collection called MYTEST001 until the given limit, 10:

```
-DB2A DIS RESTSVC(MYTEST001.*)LIMIT(10)
```

The output is similar to this output:

```
DSNL601I  -DB2A DISPLAY RESTSVC REPORT FOLLOWS-
DSNL610I  -DB2A
---- COLLECTION=MYTEST001
SERVICE                                     VERSION          STATUS
SERVICE0001                                                  STOPREJ*
SERVICE0002                                                  STOPREJ*
SERVICE0003                                                  STOPREJ*
SERVICE0004                                                  STOPREJ*
SERVICE0005                                                  STOPREJ*
SERVICE0006                                                  STOPREJ*
SERVICE0007                                                  STOPREJ*
SERVICE0008                                                  STOPREJ*
SERVICE0009                                                  STOPREJ*
SERVICE0010                                                  STOPREJ*
DSNL605I  DISPLAY RESTSVC TERMINATED WITH MAXIMUM LINES
DSN9022I  -DB2A DSNLJDSS 'DISPLAY RESTSVC' NORMAL COMPLETION
```

Example: No services found when trying to display a service

The following command attempts to display any service in collection a. No service that can be found in that collection.

```
-DB2A DIS RESTSVC(A.*)
```

The output is similar to this output:

```
DSNL601I  -DB2A DISPLAY RESTSVC REPORT FOLLOWS-
DSNL603I  -DB2A NO SERVICES FOUND FOR A.*
DSN9022I  -DB2A DSNLJDSS 'DISPLAY RESTSVC' NORMAL COMPLETION
```

Example: Displaying services with a mixed case collection name.

The following command displays the services within the collection ID BankDemo.

```
-DB2A DIS RESTSVC('BankDemo.*')
```

The output is similar to this output:

```
DSNL601I  -DB2A DISPLAY RESTSVC REPORT FOLLOWS-
DSNL610I  -DB2A
---- COLLECTION=BankDemo
SERVICE                                     VERSION          STATUS
CreateAccount                                                STARTED*
DepositById                                                  STARTED*
DisplayAccountById                                           STARTED*
DisplayAcctTranHistory                                       STARTED*
DisplayAllAccounts                                           STARTED*
TransferBetweenAccounts                                      STARTED*
DSN9022I  -DB2A DSNLJDSS 'DISPLAY RESTSVC' NORMAL COMPLETION
```

Related reference

BIND SERVICE subcommand (DSN)
The BIND SERVICE (DSN) subcommand builds an application package that represents a Db2 REST service. Db2 records the description of the service in the catalog tables and saves the prepared package in the directory.

BIND and REBIND options for packages, plans, and services
There are several options you can use for binding or rebinding packages, plans, and services. Some of the options are common for both BIND and REBIND operations.

FREE SERVICE command (DSN)
The FREE SERVICE (DSN) subcommand deletes an application package that represents a Db2 REST service. The command also removes the corresponding entry from the catalog tables.

-START RESTSVC command (Db2)
The Db2 command START RESTSVC starts the definition of a REST service that is stopped. You can qualify REST service names with a collection ID name.

-STOP RESTSVC command (Db2)

The Db2 command STOP RESTSVC prevents Db2 from accepting any new discover details or invoke requests for one or more REST services. You can qualify REST service names with a collection ID name.

Chapter 35. -DISPLAY STATS command (Db2)

The Db2 command DISPLAY STATS displays statistics about the use of resources by Db2 for certain processes.

Abbreviation: -DIS STATS

Environment

This command can be issued from a z/OS console, a DSN session under TSO, a DB2I panel (DB2 COMMANDS), an IMS or CICS terminal, or a program using the instrumentation facility interface (IFI).

Data sharing scope: Group

Authorization

To execute this command, you must use a privilege set of the process that includes one of the following privileges or authorities:

- DISPLAY privilege
- System DBADM authority
- SYSOPR authority
- SYSCTRL authority
- SYSADM authority

Syntax

```
>>- DISPLAY STATS ---+-------------------------------( -- INDEXMEMORYUSAGE -- ) -------------------->
                     |
                     +-( -- INDEXTRAVERSECOUNT -- ) -+-----------------------+-+
                     |                               |                       | |
                     |                               +-index-traverse-count-spec-+
                     |
                     +-( -- LOGREADERTASKS -- ) -----+-----------------------+-+
                                                     |                       | |
                                                     +-SCOPE -- ( -- GROUP -- ) -+

>-+-----------------------------+-><
  |                             |
  +-LIMIT -- ( -+-------- ) --+-+
                |integer    | |
                |*          | |
```

index-traverse-count-spec

© Copyright IBM Corp. 1983, 2024

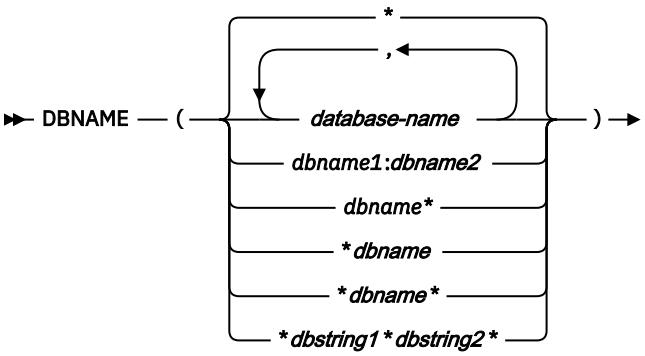

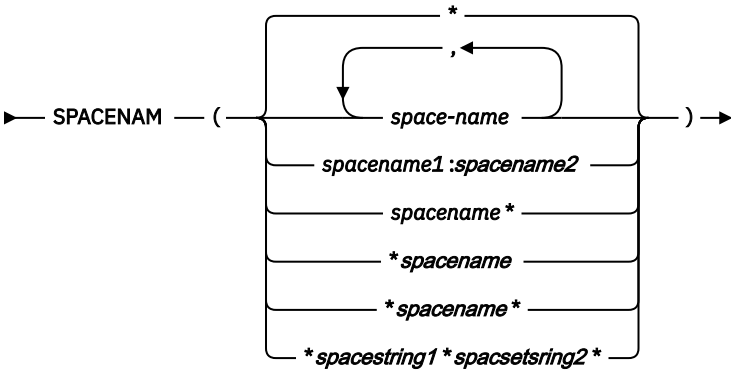

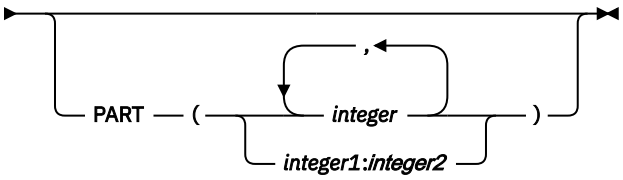

Option descriptions

INDEXMEMORYUSAGE

Specifies that statistics about the current amount of memory that Db2 uses for fast traversal of indexes are displayed.

Abbreviations: IDXMEMUSE or IMU

INDEXTRAVERSECOUNT

Specifies the display of the FTB factor for a specific index, or for a specified number of indexes with the highest FTB factors in descending order. The following variations are accepted:

Abbreviations: IDXTRAVCNT or ITC

DBNAME

Specifies one or more databases for which index traverse counts are displayed.

Abbreviation: DBN

The following variations are accepted:

(database-name, ...)

Identifies one or more database names, separated by commas or blanks.

(*)

All databases that are defined to the Db2 subsystem for which the privilege set of the process has the required authorization.

(*dbname1*:*dbname2*)

All databases whose names, in UNICODE, are between *dbname1* and *dbname2* inclusive.

(*dbname)**
All databases whose names begin with the string *dbname* that contains 1–7 characters.

(dbname*)**
All databases whose names end with the string *dbname* that contains 1–7 characters.

(dbname**)**
All databases whose names contain the string *dbname*,where *dbname* that contains 1–6 characters.

(dbstring1*dbstring2**)**
All databases whose names contain the strings *dbstring1* and *dbstring2* that together contain a total of 2–5 characters.

SPACENAM
Specifies one or more indexes for which the index traverse counts are displayed.

Abbreviations: SPACE or SP

The following variations are accepted:

(spacename, ...)
One or more named index space names, with comma or blank separators.

(*)
All index spaces that are defined to the Db2 subsystem for which the privilege set of the process has the required authorization.

(*spacename1*:*spacename2*)
All index spaces whose names, in UNICODE, are between *spacename1* and *spacename2* inclusive.

(*spacename)**
All index spaces whose names begin with the string *spacename* that contains 1–7 characters.

(spacename*)**
All index spaces whose names end with the string *spacename* that contains 1–7 characters.

(spacename**)**
All index spaces whose names contain the string *spacename* that contains 1–6 characters.

(spacestring1*spacestring2**)**
All index spaces whose names contain the strings *spacestring1* and *spacestring2* that together contain 2–5 characters.

PART
Indicates the partition number of one or more partitions to display.

The *integer* specified must identify a valid partition number for the corresponding space name and database name. *integer* can be written to designate one of the following values:

- A list of one or more partitions
- A range of all partition numbers that collate greater than or equal to *integer 1* and less than or equal to *integer2*
- A combination of lists and ranges

LOGREADERTASKS
Specifies that statistics about the log reading task (SRB) are displayed.

Abbreviations: LOGREADER or LRT

SCOPE(GROUP)
Specifies the scope of the command when LOGREADERTASKS is specified. Displays information for log reader tasks that are running on all active members of the data sharing group. SCOPE(GROUP) cannot be specified when INDEXMEMORYUSAGE or INDEXTRAVERSECOUNT are specified. The option is ignored in a non-data-sharing environment.

LIMIT
Limits the number of messages that are to be displayed.

integer
The maximum number of messages that are to be displayed. This value must be in the range 1–9999. The maximum number of messages that can be displayed is limited by the space that is available.

(*)
Limits the display to the number of messages that fit in the available space.

Output

- Message DSNT783I indicates the beginning of the output of the command when INDEXMEMORYUSAGE or an equivalent abbreviation is specified.
- Message DSNT788I indicates the beginning of the output of the command when LOGREADERTASKS or an equivalent abbreviation is specified.
- Message DSNT830I (Db2 Messages) indicates the beginning of the output of the command when INDEXTRAVERSECOUNT or an equivalent abbreviation is specified.

Example: Displaying information about the use of fast index traversal

You can use the DISPLAY STATS command to display information about all indexes for which Db2 is using *fast index traversal* (sometimes called "fast traverse blocks" or "FTB").Suppose that you issue the following command:

```
-DISPLAY STATS(INDEXMEMORYUSAGE)
```

In the Db2 subsystem on which you issue the command, the only index for which fast index traversal is being used has five levels of index pages, one partition, and uses 18339 KB of memory for fast index traversal.

The output is similar to the following output:

```
DSNT783I -
DBID  PSID   DBNAME   IX-SPACE LVL PART SIZE(KB)
----- ----- -------- -------- --- ---- --------
00278 00005 DB1      IX1      005 0001 00018339
******* DISPLAY OF STATS ENDED **************
DSN9022I - DSNTDSTS 'DISPLAY STATS' NORMAL COMPLETION
```

Now suppose that you run the `-DISPLAY STATS(INDEXMEMORYUSAGE)` command on a Db2 subsystem on which fast index traversal is being used on five partitions of an index, and the number of levels of index pages and the amount of memory that is being used for fast index traversal is the same for all partitions.

The output is similar to the following output:

```
DSNT783I -
DBID PSID DBNAME   IX-SPACE LVL PART SIZE(KB)
---- ---- -------- -------- --- ---- --------
0017 0005 DB1      IX1      003 0006 00000061
    -THRU                       0010
******* DISPLAY OF STATS ENDED **************
DSN9022I - DSNTDSTS 'DISPLAY STATS' NORMAL COMPLETION
```

Examples: Displaying information about the number of index traversals

Example 1
Display the traverse count and FTB factor for a specific index partition

```
-DISPLAY STATS(INDEXTRAVERSECOUNT) DBNAME(DB1) SPACENAM(IX1) PART(1)
```

The example command returns output similar to:

```
DBID PSID DBNAME   IX-SPACE LVL PART TRAV. COUNT FTB FACTOR
---- ---- -------- -------- --- ---- ----------- -----------
0017 0005 DB1      IX1      003 0001 00000000999 -0000000001
******* DISPLAY OF STATS ENDED ****************************
```

Example 2

Display the five index spaces with the highest FTB factors:

```
-DISPLAY STATS(ITC) DBNAME(DB1) LIMIT(5)
```

The example command returns output similar the to the following output, with the indexes in descending order starting with the highest FTB factor:

```
Output (traverse counts are in descending order)
DBID PSID DBNAME   IX-SPACE LVL PART TRAV. COUNT FTB FACTOR
---- ---- -------- -------- --- ---- ----------- -----------
0017 0005 DB1      IX2.     003 0008 00000030021 00000030021
0017 0005 DB1      IX2      003 0016 00000029999 00000029999
0017 0005 DB1      IX3      003 0001 00000000999 00000000999
0017 0005 DB1      IX1      003 0001 00000050099 00000000000
0017 0005 DB1      IX2      003 0010 00000050001 -0000000001
******* DISPLAY OF STATS ENDED ****************************
```

Examples: Displaying information about log reading tasks

Example: Display information about the status of log reading tasks on a local Db2 subsystem:

```
-DISPLAY STATS(LRT)
```

The output of the DISPLAY STATS(LOGREADERTASKS) command is similar to the following output:

```
DSNT788I  -DB2A
SESSIONID        STATUS     CURR. POSITION       NUM RECS   AGE
  CORR-ID        LOCATION
---------------- ---------- -------------------- ---------- ------
EE00982796560801 READING    0000000000018898F400 32071      89s
  014.LGRTSK01   SVLSSC0A
EE00DAC3E7842E02 SUSP EOS   00000000000188CA2280 30         6s
  014.LGRTSK02   DG653758
******* DISPLAY OF STATS ENDED     **********************************
DSN9022I  -DB2A DSNTDSTS 'DISPLAY STATS' NORMAL COMPLETION
```

See message DSNT788I (Db2 Messages) for a description of the information that is returned.

Example: Display information about log reader tasks running on all active members of the data sharing group:

```
-DISPLAY STATS(LRT) SCOPE(GROUP)
```

The output of the DISPLAY STATS(LOGREADERTASKS) command with the SCOPE(GROUP) option is similar to the following output:

```
DSNT788I  -DB2A
SESSIONID        STATUS     CURR. POSITION       NUM RECS   AGE
  CORR-ID        LOCATION
---------------- ---------- -------------------- ---------- ------
EE00982796560801 READING    00D9EE0DADE987256200 32071      89s
  014.LGRTSK01   SVLSSC0A
EE00DAC3E7842E03 SUSP EOS   00D9EE0DADE9872CA200 30         6s
  014.LGRTSK03   DG653758
******* DISPLAY OF STATS ENDED     **********************************
DSN9035I  -DB2A BEGIN OF DISPLAY FOR MEMBER: DB2B
--------------------------------------------------
DSNT791I  -DB2B NO LOG READER TASK STATISTICS AVAILABLE
--------END OF DISPLAY FOR MEMBER: DB2B    --------
DSN9035I  -DB2A BEGIN OF DISPLAY FOR MEMBER: DB2C
--------------------------------------------------
SESSIONID        STATUS     CURR. POSITION       NUM RECS   AGE
```

```
  CORR-ID        LOCATION
---------------- ---------- -------------------- ---------- ------
EE00DAC2F9812803 SUSP EOS   00D9EE0DADE9872CA200 30         6s
  014.LGRTSK03   DG658121
******* DISPLAY OF STATS ENDED     ********************************
--------END OF DISPLAY FOR MEMBER: DB2C    --------
DSN9022I  -DB2A DSNTDSTS 'DISPLAY STATS' NORMAL COMPLETION
```

See message DSNT788I (Db2 Messages) for a description of the information that is returned.

Chapter 36. -DISPLAY THREAD command (Db2)

The Db2 command DISPLAY THREAD displays current status information about Db2 threads.

A Db2 thread can be an allied thread, a database access thread, or a parallel task thread. Threads can be active, inactive, indoubt, or postponed.

Distributed threads are those threads that have a connection with a remote location (active or inactive) or that had a connection with a remote location (indoubt). An allied thread and a parallel task thread can be distributed or non-distributed; a database access thread is always distributed.

The DISPLAY THREAD command allows you to select the type of information you want to display by using one or more of the following criteria:

- Active threads, inactive threads, indoubt threads, postponed threads, procedure threads, system threads, or the set of active, indoubt, postponed, and system threads (see the descriptions under the TYPE option for more information)
- Allied threads, including those threads that are associated with the address spaces whose connection names are specified
- Distributed threads, including those threads that are associated with a specific remote location
- Detailed information about connections with remote locations
- A specific logical unit of work ID (LUWID)

The information that is returned by the DISPLAY THREAD command reflects a dynamic status. When the information is displayed, it is possible that the status has changed. Moreover, the information is consistent only within one address space and is *not necessarily* consistent across all address spaces displayed.

Abbreviation: -DIS THD

Environment

This command can be issued from a z/OS console, a DSN session under TSO, a DB2I panel (DB2 COMMANDS), an IMS or CICS terminal, or a program using the instrumentation facility interface (IFI).

Data sharing scope: Group or member

Authorization

To execute this command, you must use a privilege set of the process that includes one of the following privileges or authorities:

- DISPLAY privilege
- System DBADM authority
- SYSOPR authority
- SYSCTRL authority
- SYSADM authority

Db2 commands that are issued from a logged-on z/OS console or TSO SDSF can be checked by Db2 authorization using primary and secondary authorization IDs. A logged-on z/OS user ID must be defined in RACF or a similar security server.

© Copyright IBM Corp. 1983, 2024

Syntax

```
►► DISPLAY THREAD ── ( ┌──────────────────────────────────────┐ ) ──►
                       │   ┌──────────────────────────────┐   │
                       │   │   ┌──────────────────────┐   │   │
                       │   │   │   ┌──────────────┐   │   │   │
                       │   │   │   │   ┌──────┐   │   │   │   │
                       │   │   │   │   │  ,   ◄   │   │   │   │
                       │   │   │   │   ▼      │   │   │   │   │
                       │   │   │   │ connection-name │   │   │   │
                       │   │   │   │   │ partial-connection * │   │   │   │
                       │   │   │   │   └──────┘   │   │   │   │
                       │   │   │   └──────────────┘   │   │   │
                       │   │   └──────────────────────┘   │   │
                       │   │                              │   │
                       │   │              *               │   │
                       │   └──────────────────────────────┘   │
                       └──────────────────────────────────────┘

►── SCOPE ── ( ┌─ LOCAL ─┐ ) ──┬──────────────────────────────────────────────────────────────────────────►
               │ GROUP   │     │                                                                          │
               └─────────┘     │                   ┌─ ACTIVE ─────────┐                                   │
                               │                   │ INDOUBT          │                                   │
                               │                   │ *                │                                   │
                               │ TYPE( ────────────┼─ INACTIVE        ├──── ) ────────────────────────────┤
                               │                   │ POSTPONED        │                                   │
                               │                   │ PROC             │                                   │
                               │                   │ SYSTEM           │                                   │
                               │                   └──────────────────┘                                   │
                               │                                                                          │
►──┬──────────────────────────────────────────────────────────────────────────────────────────────────────►
   │                                                                                                      │
   │                   ┌──────────────────────────────────────┐                                           │
   │                   │   ┌──────────────────────────────┐   │                                           │
   │                   │   │   ┌──────────────────────┐   │   │                                           │
   │                   │   │   │   ┌──────────────┐   │   │   │                                           │
   │                   │   │   │   │   ┌──────┐   │   │   │   │                                           │
   │                   │   │   │   │   │  ,   ◄   │   │   │   │                                           │
   │                   │   │   │   │   ▼      │   │   │   │   │                                           │
   │ LOCATION( ────────┼───┼───┼───┼─ location-name ─┼───┼───┼───┼──── ) ────────────────────────────────┤
   │                   │   │   │   │ partial-location * │   │   │   │                                   │
   │                   │   │   │   └──────────────┘   │   │   │                                           │
   │                   │   │   └──────────────────────┘   │   │                                           │
   │                   │   │                              │   │                                           │
   │                   │   │              *               │   │                                           │
   │                   │   └──────────────────────────────┘   │                                           │
   │                   │                                      │                                           │
   │                   │   ┌──────────────────────────────┐   │                                           │
   │                   │   │   ┌──────────────────────┐   │   │                                           │
   │                   │   │   │   ┌──────────────┐   │   │   │                                           │
   │                   │   │   │   │   ┌──────┐   │   │   │   │                                           │
   │                   │   │   │   │   │  ,   ◄   │   │   │   │                                           │
   │                   │   │   │   │   ▼      │   │   │   │   │                                           │
   │ LUWID( ───────────┼───┼───┼───┼─ luwid ─────┼───┼───┼───┼──── ) ────────────────────────────────┤
   │                   │   │   │   │ partial-luwid * │   │   │   │                                       │
   │                   │   │   │   │ token           │   │   │   │                                       │
   │                   │   │   │   └──────────────┘   │   │   │                                           │
   │                   │   │   └──────────────────────┘   │   │                                           │
   │                   │   │                              │   │                                           │
   │                   │   │              *               │   │                                           │
   │                   │   └──────────────────────────────┘   │                                           │
   │                   │                                      │                                           │
   │ ACCEL( ───────────┼──────────────── * ──────────────────┼──── ) ────────────────────────────────────┤
   │                   │   ┌──────────────────────────────┐   │                                           │
   │                   │   │   ┌──────────────────────┐   │   │                                           │
   │                   │   │   │   ┌──────────────┐   │   │   │                                           │
   │                   │   │   │   │   ┌──────┐   │   │   │   │                                           │
   │                   │   │   │   │   │  ,   ◄   │   │   │   │                                           │
   │                   │   │   │   │   ▼      │   │   │   │   │                                           │
   │                   │   │   │   │ accelerator-name │   │   │   │                                       │
   │                   │   │   │   └──────────────┘   │   │   │                                           │
   │                   │   │   └──────────────────────┘   │   │                                           │
   │                   │   └──────────────────────────────┘   │                                           │
   └──────────────────────────────────────────────────────────────────────────────────────────────────────►
                                                                                                          │
►──┬──────────────────────────────────────────────────────────────────────────────────────────────────────►
   │                                                                                                      │
   │                   ┌─ 512 ─────────┐                                                                  │
   │ LIMIT( ───────────┼─ integer ─────┼──── ) ──┬──────────────────────────────────────────────────────►
   │                   │               │         │                                                        │
   │                   └─ * ───────────┘         │                                                        │
   │                                             │                                                        │
   │                                             │                   ┌─ DETAIL ─┐                         │
   │                                             │                   │          │                         │
   │                                             │                   └──────────┘                         │
   │                                             │                                                        │
   └─────────────────────────────────────────────┴──────────────────────────────────────────────────────►◄
                                                                                                          │
►──┬──────────────────────────────────────────────────────────────────────────────────────────────────────►◄
   │                   ┌──────────────────────────────────────┐                                           │
   │                   │   ┌──────────────────────────────┐   │                                           │
   │                   │   │   ┌──────────────────────┐   │   │                                           │
   │                   │   │   │   ┌──────────────┐   │   │   │                                           │
   │                   │   │   │   │   ┌──────┐   │   │   │   │                                           │
   │                   │   │   │   │   │  ,   ◄   │   │   │   │                                           │
   │                   │   │   │   │   ▼      │   │   │   │   │                                           │
   │ RRSURID( ─────────┼───┼───┼───┼─ rrs-urid ──┼───┼───┼───┼──── ) ────────────────────────────────┤
   │                   │   │   │   │ *               │   │   │   │                                       │
   │                   │   │   │   └──────────────┘   │   │   │                                           │
   │                   │   │   └──────────────────────┘   │   │                                           │
   │                   │   │                              │   │                                           │
   │                   │   │              *               │   │                                           │
   │                   │   └──────────────────────────────┘   │                                           │
   └──────────────────────────────────────────────────────────────────────────────────────────────────────►◄
```

Option descriptions

Only under certain conditions, as described in the following lists, are any of the following options required.

If you do not specify either (*connection-name*) or (*), the following rules apply:

- If the command is issued from a DSN session under TSO, a DB2I panel (DB2 COMMANDS), or an IMS or CICS terminal, the connection name is inherited from the associated address space.
- If the command is not issued from one of those environments, the following rules apply:
  - If you do not specify either LOCATION or LUWID, processing terminates with a DSNV413I message.
  - If you do specify LOCATION or LUWID, only distributed threads of the type selected by the TYPE option are displayed.
  - When you explicitly specify *location-name* , only distributed threads of the type selected by the TYPE option that either have (active or inactive threads) or had (indoubt threads) a connection with the specified location are displayed.

(*connection-name* , ...)
Lists one or more connection names (of 1 to 8 characters each). Allied threads are selected only from the address spaces associated with those connection names. The LOCATION option can restrict what is displayed:

- If you specify LOCATION(*), only distributed threads of the type specified in the TYPE option are displayed.
- When you explicitly specify *location-name* , only distributed threads of the specified type that either have or had a connection with the specified location are displayed.

(*partial-connection , ...)**
Selects the connections that begin with the string *partial-connection* and can end with any string, including the empty string. For example, DISPLAY THREAD(CICS*,IMS*) selects all connection names that begin with the string 'CICS' or 'IMS'. The LOCATION option can restrict the display exactly the same way as previously described for *location-name* .

(*)
Displays all threads in all address spaces attached to Db2 and all database access threads of the types specified in the TYPE option. The LOCATION option can restrict what is displayed:

- If you specify LOCATION(*), only distributed threads are displayed.
- When you explicitly specify *location-name* , only distributed threads that either have (active or inactive threads) or had (indoubt threads) a connection with the specified location are displayed.

The **default** is to display only the connections that are associated with the transaction manager from which the command was entered.

SCOPE
Specifies the scope of the command.

(LOCAL)
Displays threads on only the current member.

(GROUP)
Displays all threads on the data sharing group.

TYPE
Tells the type of thread to display.

Abbreviation: T

(ACTIVE)
Displays only active threads. An active allied thread is connected to Db2 via TSO, BATCH, IMS, CICS or CAF. An active database access thread is connected by a network connection to another system and is performing work on behalf of that system. If, during command processing, an active thread becomes indoubt, it can appear twice—once as active and once as indoubt.

Abbreviation: A

The information that is produced by ACTIVE can be useful for debugging purposes, especially message DSNV402I.

(INDOUBT)
Displays only indoubt threads.

An indoubt thread is a participant in a two-phase commit protocol that has completed the first phase of commit, and has then lost communication with the commit coordinator and does not know whether to commit or roll back the updates that have been made.

The indoubt thread information that is displayed includes threads for which Db2 has a coordinator role, a participant role, or both coordinator and participant roles.

The commit coordinator for an allied thread is either a transaction manager (for example, IMS or CICS) or z/OS RRS for threads that use RRSAF. The commit coordinator for a database access thread is a requester at a remote system.

Indoubt threads hold locks on all resources that were updated.

Abbreviation: I

(*)
Displays active, indoubt, postponed, and system threads.

(INACTIVE)
Displays only inactive database access threads and connections that are connected by a network connection to another system. An inactive thread is idle and waits for a new unit of work to begin from that system.

Abbreviation: INA

Use qualifiers such as complete location names or LUWIDs with this option. When there are large numbers of inactive database access threads, unqualified display requests can temporarily change the Db2 working set, which can temporarily affect the performance of active threads.

(POSTPONED)
Displays information about units of work whose back-out processing has been postponed.

Abbreviation: P

After you have identified postponed threads, use the RECOVER POSTPONED command, described, to complete backout processing for the postponed units of work.

(PROC)
Displays information about threads that are executing stored procedures and user-defined functions. All -DISPLAY THREAD keywords are valid when TYPE(PROC) is specified.

(SYSTEM)
Displays a subset of system agent threads with message DSNV402I. The system agent threads displayed are deemed useful for serviceability purposes. Not all system threads are displayed.

Abbreviation SYS

If the command or system agent can be canceled, then the associated token is displayed in the output. You can specify this option from early in the restart to late in the shutdown process. If you issue this command before or after release work, then the restart or shutdown status is displayed in the output.

When the token is identified for the database command or systems agent, you can use the CANCEL THREAD(token) command to cancel it.

LOCATION(*location-name* , ...)
Limits the display to distributed threads as described.

Abbreviation: LOC

location-name
Displays only distributed threads of the specified type that either have (active or inactive threads) or had (indoubt threads) a remote connection with the specified *location-name* .

Db2 does not receive a location name from requesters that are not Db2 for z/OS subsystems. To display information about a requester that is not a Db2 for z/OS subsystem, enter its LU name or IP address. Enclose the LU name in the less-than (<) and greater-than (>) symbols. For example, the following command displays information about a remote location (that is not Db2 for z/OS) with the LU name of LULA:

```
-DISPLAY THREAD (*) LOCATION (<LULA>)
```

The following command displays information about a remote location (that is not Db2 for z/OS) with an IP address of ::FFFF:123.34.101.98:

```
-DISPLAY THREAD (*) LOCATION (::FFFF:123.34.101.98)
```

Db2 uses the <LU name> notation or IP address in messages displaying information about requesters other than Db2.

partial-location *

Selects all location names that begin with the string *partial-location* and can end with any string, including the empty string. For example, `LOCATION(SAN*)` selects all location names that begin with the string 'SAN'.

You can use an asterisk (*) when specifying an LU name in the same manner as previously described for other location names that are not Db2 for z/OS subsystems. For example, `LOCATION(<LULA*)` selects all remote locations (that are not Db2 for z/OS) with an LU name that begins with the string 'LULA'.

You cannot use an asterisk when you specify an IP address.

(*)

Display all distributed threads of the specified type.

LUWID(*luwid* , ...)

Displays information about the distributed threads that have the specified LUWID. It is possible for more than one thread to have the same LUWID.

luwid

Consists of a fully qualified LU network name followed by a period and an LUW instance number.

The LU network name consists of a one- to eight-character network ID, a period, and a one- to eight-character network LU name. The LUW instance number consists of 12 hexadecimal characters that uniquely identify the unit of work.

partial-luwid *

Selects all LUWIDs that begin with the string *partial-luwid* and can end with any string, including the empty string. For example, LUWID(NET1.*) selects all LUWIDs with a network name of 'NET1'.

token

Identifies a specific thread in an alternate way. Db2 assigns a token to each distributed thread it creates. A token is a one- to six-digit decimal number that appears after the equal sign in all Db2 messages that display a LUWID.

If you do not include any periods nor a '*' in the LUWID specification, Db2 assumes that you are supplying a token. The token that Db2 assigns to a specific LUWID is unique for that Db2 subsystem, but not necessarily unique across subsystems.

ACCEL(*accelerator-name* , ...)

Limits the list to threads with active accelerator processes executing within the specified accelerator server.

accelerator-name

The specific accelerator server name. If ACCEL(accelerator-name) is specified, only threads active in that specific ACCEL will be displayed.

Supplying an asterisk (*) as the accelerator-name indicates that the display must include all threads with any accelerator server. If ACCEL(*) is specified, only threads currently active in an accelerator will be displayed.

DETAIL
Displays additional information about active, inactive, and indoubt threads.

LIMIT
Accepts numeric input that specifies the number of lines of output that you want. The default limit is 512, so you must use the limit keyword if you want to set a different limit.

If you select LIMIT(*), all output that can be properly formatted within internal storage constraints will be displayed.

When SCOPE(GROUP) is specified, the line limit is enforced per member displayed.

RRSURID(*rrs-urid*)
Specifies that only threads that match the specified RRSURID selection criteria are to be displayed.

- If RRSURID(*rrs-urid*) is specified, any thread involved in the RRSURID that has the value *rrs-urid* , and that meets any other specified selection criteria, will be displayed.
- If RRSURID(*) is specified, any thread involved in any RRSURID, and that meets any other specified selection criteria, will be displayed.

Usage notes

Formatted report for distributed threads
The series of messages, DSNV444I through DSNV446I, augment the formatted report for DISPLAY THREAD TYPE (ACTIVE or INACTIVE) for distributed threads.

Threads for connections to remote servers
A database access thread that is connected to a requester can also be connected to another database server location using DRDA access. In that case, Db2 issues message DSNV445I for the requester, and message DSNV444I and zero or more DSNV446I messages for the remote server connections. In addition, the database access thread acts as an intermediate database server.

Participant threads waiting for the commit or abort decision
A DSNV465I message is issued for an active participant thread that has completed phase 1 of commit processing and has been waiting for the commit or abort decision from the coordinator for more than 60 seconds.

DISPLAY THREAD output limit
If a DISPLAY THREAD command is issued from the z/OS console, the maximum number of lines of output for a single invocation of the command is 512 lines (at which time a DSNV513I, DSNV514I, or DSNV515I message is printed). If you do not receive the required information in the first 255 lines of output, issue the command again, specifying the TYPE option and a specific connection name, location, LUWID, or a combination of these, as appropriate, to reduce the output.

Showing parallel tasks
The DISPLAY THREAD command shows parallel tasks by using a status type of PT. The parallel tasks are displayed immediately after the originating task. If the thread has a status of PT, the connection name contains blanks if the thread of the originating task is running on the same Db2 subsystem. This shows that these parallel tasks are related to the originating task.

Displaying the XID
If the DISPLAY THREAD command is issued with the TYPE ACTIVE and DETAIL options, or with the TYPE INDOUBT option, message DSNV440I displays the contents of the XID. The contents of the XID are displayed as a hexadecimal value.

The XID is displayed in the DISPLAY THREAD TYPE INDOUBT report if the indoubt transaction is XID related.

Threads associated with trusted context
If a thread is associated with a trusted context, message DSNV485I displays the trusted context name, system authorization ID, and role.

Displaying threads while Db2 is active

All -DISPLAY and -CANCEL commands are allowed to run concurrent to other command issued through the console. This ensures thread tokens can be identified and used for soft thread cancels, even while long running console commands are in progress. The majority of system threads displayed cannot be canceled. For example, a 0 thread token is provided for DSNV402I messages.

The command preprocessor (GCPC) console commands tasks can be canceled, and a token will be provided for these threads in a DSNV402I message in the -DISPLAY THREAD(*) TYPE(SYSTEM) report.

Displaying threads during shutdown

All commands will be quiesced at the beginning of shutdown. Only -DISPLAY THREAD(*) commands will be accepted after this point, and these will be valid until the last stages of shutdown. Much like -DISPLAY THD(*) during restart, only -DISPLAY THREAD(*) TYPE(SYSTEM) will produce meaningful thread information. All other variations of -DISPLAY THREAD(*) will terminate without thread data. If SCOPE(GROUP) is specified during shutdown, then a DSNV495I message will be displayed and the command will only execute locally.

Trace information for commands issued with group scope

If this command is issued with options that specify group scope in a Db2 data sharing member, it also runs on all other active members. IFICID 090 trace records for other group members can show that the same command was issued by the SYSOPR authorization ID from the 016.TLPKN5F correlation ID, in addition to the trace records from the member where the original command was issued. See Command scope in Db2 data sharing (Db2 Data Sharing Planning and Administration).

Output

Message DSNV401I (Db2 Messages) indicates the beginning of the output of the command.

Examples

Example: Displaying information about a local thread

The output of the command DISPLAY THREAD shows a token for every thread, distributed or not. This example shows the token for an allied thread that is not distributed. The token is 123. You can use the thread's token as the parameter in the CANCEL THREAD command.

```
-DISPLAY THREAD(*)
```

This command produces output similar to the following output:

```
DSNV401I - DISPLAY THREAD REPORT FOLLOWS -
DSNV402I - ACTIVE THREADS -
NAME     ST A   REQ ID              AUTHID    PLAN      ASID TOKEN
BATCH    T  *     5 BKH2C            SYSADM    BKH2      000D   123
DISPLAY ACTIVE REPORT COMPLETE
DSN9022I - DSNVDT '-DIS THD' NORMAL COMPLETION
```

Example: Displaying information about threads at all locations

This example shows information about conversation activity when distribution information is displayed for active threads. Db2 returns the following output, indicating that the local site application is waiting for a conversation to be allocated in Db2, and that a Db2 server is accessed by a DRDA client using TCP/IP.

```
-DISPLAY THREAD(*) LOCATION(*) DETAIL
```

This command produces output similar to the following output:

```
DSNV401I - DISPLAY THREAD REPORT FOLLOWS -
DSNV402I - ACTIVE THREADS -
     NAME     ST A   REQ ID           AUTHID   PLAN     ASID   TOKEN
     TSO      TR *     9 SYSADM       SYSADM   DSNESPRR 0029      30
      V441-ACCOUNTING=D1001
      V436-PGM=DSNESPRR.DSNESM68, SEC=1, STMNT=137, THREAD-INFO=SYSADM:*:*:
```

```
          *:*:*:*:*
      V444-USIBMSY.SYEC717A.BD6E55DCF589=30 ACCESSING DATA AT
       (  1)STL716A-SYEC716A
      V447--INDEX    SESSID           A ST    TIME
      V448-- (  1)   0000000000000000 N A4    0522008555443
     TSO      RA *     2 SYSADM       SYSADM   DSNESPRR 0033      28
      V441-ACCOUNTING=D1001
      V445-USIBMSY.SYEC716A.BD6E543A7BDF=28 ACCESSING DATA FOR
       (  1)::FFFF:9.30.115.136
      V447--INDEX    SESSID           A ST    TIME
      V448--(  1) 446:1027            W R2    0522008483849
      DISPLAY ACTIVE REPORT COMPLETE
      DSN9022I - DSNVDT '-DIS THD' NORMAL COMPLETION
```

Example: Displaying information about indoubt threads

In this example, a system at Site 1 has a TSO application and an IMS application. The system at Site 1 fails after Db2 commits the TSO application, but before the commit decision has been communicated to the participant subsystems at Site 2. The failure occurs before IMS has communicated the commit or rollback decision to the Site 1 Db2 subsystem. The DISPLAY THREAD commands that are issued at Site 1 and 2 show report output similar to the following:

The following DISPLAY THREAD command is issued at Site 1:

```
-DISPLAY THREAD(*) TYPE(INDOUBT)
```

This command produces output similar to the following output:

```
 DSNV401I - DISPLAY THREAD REPORT FOLLOWS -
 DSNV406I - INDOUBT THREADS -
 COORDINATOR               STATUS     RESET URID         AUTHID
 TEST0001                  INDOUBT          00000EA8BD60 SYSADM
  V449-HAS NID= DONSQLXX.F100000000 AND ID= CTHDCORID001
  V467-HAS LUWID USIBMSY.SYEC717A.BD6E5A52FFd1.0001=49
  V466-THREAD HAS BEEN INDOUBT FOR    00:06:03
  V450-HAS PARTICIPANT INDOUBT AT
   STL717B-SYEC717B
 STL717A                   COMMITTED        00000EA8C6CE SYSADM
  V467-HAS LUWID USIBMSY.SYEC717A.BD6E5BOA1F94.0001=52
  V450-HAS PARTICIPANT INDOUBT AT
   STL717B-SYEC717B
   STL716A-SYEC716A
 DISPLAY INDOUBT REPORT COMPLETE
 DSN9022I - DSNVDT '-DISPLAY THREAD' NORMAL COMPLETION
```

The following DISPLAY THREAD command is issued at Site 2:

```
-DISPLAY THREAD(*) TYPE(INDOUBT)
```

This command produces output similar to the following output:

```
 DSNV401I - DISPLAY THREAD REPORT FOLLOWS -
 DSNV406I - INDOUBT THREADS -
 COORDINATOR               STATUS     RESET URID         AUTHID
 STL717A-SYEC717A          INDOUBT          00000DAC6538 SYSADM
  V467-HAS LUWID USIBMSY.SYEC717A.BD6E5A52FFD1.0001=26
  V466-THREAD HAS BEEN INDOUBT FOR    00:14:29
 STL717A-SYEC717A      INDOUBT          00000DAC792C SYSADM
  V467-HAS LUWID USIBMSY.SYEC717A.BD6E5BOA1F94.0001=28
  V466-THREAD HAS BEEN INDOUBT FOR    00:09:45
 DISPLAY INDOUBT REPORT COMPLETE
 DSN9022I - DSNVDT '-DIS THREAD' NORMAL COMPLETION
```

Example: Displaying information about a stored procedure thread that is waiting

This example shows a thread executing within a stored procedure and a thread waiting for a stored procedure to be scheduled. Assume that an application makes a call to stored procedure PROC1 and then to stored procedure PROC2. PROC2 is in a STOP QUEUE state.

The output for PROC1 while it is executing shows a status of SP in the ST column, which indicates that a thread is executing within a stored procedure:

```
-DISPLAY THREAD(*)
```

This command produces output similar to the following output:

```
DSNV401I - DISPLAY THREAD REPORT FOLLOWS -
DSNV402I - ACTIVE THREADS - 176
NAME     ST A   REQ ID           AUTHID   PLAN     ASID TOKEN
BATCH    SP       3 RUNAPPL      SYSADM   PL01AP01 001D    43
 V429 CALLING STORED PROCEDURE PROC1, LOAD MODULE LMPROC1
DISPLAY ACTIVE REPORT COMPLETE
DSN9022I - DSNVDT '-DISPLAY THREAD' NORMAL COMPLETION
```

The output for PROC2, while it is queued, shows a status of SW in the ST column, which indicates that a thread is waiting for a stored procedure to be scheduled:

```
-DISPLAY THREAD(*)
```

This command produces output similar to the following output:

```
DSNV401I - DISPLAY THREAD REPORT FOLLOWS -
DSNV402I - ACTIVE THREADS - 198
NAME     ST A   REQ ID           AUTHID   PLAN     ASID TOKEN
BATCH    SW *    13 RUNAPPL      SYSADM   PL01AP01 001D    43
 V429 CALLING STORED PROCEDURE PROC2, LOAD MODULE
DISPLAY ACTIVE REPORT COMPLETE
DSN9022I - DSNVDT '-DISPLAY THREAD' NORMAL COMPLETION
```

Example: Displaying information about autonomous procedures

The following example shows a thread that invokes an autonomous procedure. The autonomous procedure and its token are identified by a DSNV520I message. You can cancel the autonomous procedure by canceling the invoking thread. In this example that thread with token 13 invoked the autonomous procedure.

```
19.26.27         >dis thd(*) service(stg)
19.26.27 STC00065  DSNV401I  > DISPLAY THREAD REPORT FOLLOWS -
19.26.27 STC00065  DSNV402I  > ACTIVE THREADS -
NAME     ST A   REQ ID           AUTHID   PLAN     ASID TOKEN
BATCH    RA *     1 TMH11003     SYSADM   PLAN2    003D    13
V492-LONG 12K 64VLONG 196K 64LONG 200K                     ;
V442-CRTKN=USIBMSY.SYEC1DB2.C760EC93ED89               ;
V445-USIBMSY.SYEC1DB2.C760EC93ED89=13 ACCESSING DATA FOR
  <SYEC1DB2>-SYEC1DB2                                      ;
BATCH    AT *     0 TMH11003     SYSADM   PLAN2    003D     0
V520-AUTONOMOUS PROCEDURE INVOKED BY THREAD WITH TOKEN = 13
V492-LONG 12K 64VLONG 136K 64LONG 260K                     ;
DISPLAY ACTIVE REPORT COMPLETE
```

Example: Displaying information about an allied, non-distributed originating thread and its parallel tasks

This example shows an allied, non-distributed originating thread (TOKEN=30) that is established (allocated according to plan) in addition to all of its parallel tasks (PT), which are running on the same Db2 system. All parallel tasks are displayed immediately following their corresponding originating thread.

```
16.32.57       DB1G DISPLAY THREAD(*)
16.32.57 STC00090  DSNV401I DB1G DISPLAY THREAD REPORT FOLLOWS -
16.32.57 STC00090  DSNV402I DB1G ACTIVE THREADS -
NAME     ST A   REQ ID           AUTHID   PLAN     ASID TOKEN
BATCH    T  *     1 PUPPYDML     USER001  MYPLAN   0025    30
         PT *   641 PUPPYDML     USER001  MYPLAN   002A    40
         PT *    72 PUPPYDML     USER001  MYPLAN   002A    39
         PT *   549 PUPPYDML     USER001  MYPLAN   002A    38
         PT *   892 PUPPYDML     USER001  MYPLAN   002A    37
         PT *    47 PUPPYDML     USER001  MYPLAN   002A    36
         PT *   612 PUPPYDML     USER001  MYPLAN   002A    35
         PT *   545 PUPPYDML     USER001  MYPLAN   002A    34
         PT *   432 PUPPYDML     USER001  MYPLAN   002A    33
         PT *   443 PUPPYDML     USER001  MYPLAN   002A    32
         PT *   252 PUPPYDML     USER001  MYPLAN   002A    31
DISPLAY ACTIVE REPORT COMPLETE
16.32.58 STC00090  DSN9022I DB1G DSNVDT '-DISPLAY THREAD' NORMAL
 COMPLETION
```

Example: Displaying detailed information TCP/IP threads from remote locations

This example shows the detail report for a Db2 client that uses TCP/IP to access a remote DRDA server.

```
-DISPLAY THREAD(*) LOCATION(*) DETAIL
```

This command produces output similar to the following output:

```
DSNV401I - DISPLAY THREAD REPORT FOLLOWS -
DSNV402I - ACTIVE THREADS -
   NAME     ST A   REQ ID          AUTHID  PLAN     ASID   TOKEN
   BATCH    TR *     4 AAAAAAA     ADMF001 AAAAAAA  0024      61
    V441-ACCOUNTING=KEITH:AAAAAAA
    V436-PGM=MYPLAN.AAAAAAA, SEC=1, STMNT=1973, THREAD-INFO=SYSADM:*:*:*:
         *:*:*:*
    V444-USIBMSY.SYEC717A.BD6E60CE2BD3=61 ACCESSING DATA AT
     (  1)STL717B-::FFFF:9.30.115.135..447
    V447--INDEX SESSID            A ST TIME
    V448--(  1) 1027:447          N R2 0522009445180
   DISPLAY ACTIVE REPORT COMPLETE
   DSN9022I - DSNVDT '-DIS THD' NORMAL COMPLETION
```

Example: Displaying information about TCP/IP threads that use IPv6 addressing

This example shows the detail report for a client that supports IPv6 addressing and provides a 58-character extended correlation token to the Db2 server. That token is displayed in message V442.

```
-DISPLAY THREAD(*)
```

This command produces output similar to the following output:

```
DSNV401I - DISPLAY THREAD REPORT FOLLOWS -
DSNV402I - ACTIVE THREADS -
   NAME     ST A   REQ ID           AUTHID   PLAN     ASID TOKEN
   SERVER   RA *     1 db2bp        ADMF001  DISTSERV 003A     3
    V437-WORKSTATION=hornet, USERID=admf001,
         APPLICATION NAME=db2bp
    V442-CRTKN=1111:2222:3333:4444:5555:6666:7777:8888.65535.123456789ABC
    V445-G91A0D32.EBCF.C0C44BBCCFF4=3 ACCESSING DATA FOR
     1111:2222:3333:4444:5555:6666:7777:8888
DISPLAY ACTIVE REPORT COMPLETE
DSN9022I - DSNVDT '-DIS THD' NORMAL COMPLETION
```

Example: Displaying information about units of work with postponed back-out processing

This example shows information about units of work whose back-out processing has been postponed.

```
-DISPLAY THREAD (*) TYPE (POSTPONED)
```

This command produces output similar to the following output:

```
DSNV401I - DISPLAY THREAD REPORT FOLLOWS -
DSNV431I - POSTPONED ABORT THREADS -
COORDINATOR               STATUS      RESET URID         AUTHID
BATCH                     ABORT-P           000002FF98EA ADMF001
BATCH                     ABORT-P           000002FF9000 ADMF001
DISPLAY POSTPONED ABORT REPORT COMPLETE
DSN9022I - DSNVDT '-DISPLAY THREAD' NORMAL COMPLETION
```

Example: Displaying detailed information about threads that are processing under a user-defined function

This example shows the token for a thread that is processing a user-defined function. The token is 18.

```
-DISPLAY THREAD(*) DETAIL
```

This command produces output similar to the following output:

```
DSNV401I - DISPLAY THREAD REPORT FOLLOWS -
DSNV402I - ACTIVE THREADS -
NAME     ST A   REQ ID           AUTHID   PLAN     ASID TOKEN
BATCH    T  *   231 DISTHD       ADMF001           0021    95
BATCH    SW *    38 INSERT       ADMF001  MYPLAN   0025    18
```

```
 V436-PGM=CLIP74C1.UFIP74C1, SEC=0, STMNT=0, THREAD-INFO=SYSADM:*:*:*:
     *:*:*:*
 V429 CALLING FUNCTION =SCIP7401.SP_UFIP74C1       ,
     PROC=V61AWLM3, ASID=0030, WLM_ENV=WLMENV3
DISPLAY ACTIVE REPORT COMPLETE
DSN9022I - DSNVDT '-DISPLAY THREAD' NORMAL COMPLETION
```

Example: Displaying information about threads that are involved in an RRS unit of recovery

This example shows information about a thread that is involved in an RRS unit of recovery.

```
-DISPLAY THREAD(*) RRSURID(*)
```

This command produces output similar to the following output:

```
- 08.23.58 STC00149  DSNV401I  ( DISPLAY THREAD REPORT FOLLOWS -
   - 08.23.58 STC00149  DSNV402I  ( ACTIVE THREADS -
   - NAME     ST A   REQ ID           AUTHID   PLAN     ASID TOKEN
   - RRSAF    T        8 TGXID-111    ADMF001  TGXIDR   0023    35
   -  V481-DB2 IS PARTICIPANT FOR RRS URID B4D0FC267EB020000000001101010000
   - DISPLAY ACTIVE REPORT COMPLETE
   - 08.23.58 STC00149  DSN9022I  ( DSNVDT '-DIS THD' NORMAL COMPLETION
```

Example: Displaying information about threads when Db2 is the coordinator for an indoubt RRS unit of recovery

This example shows information about a thread where Db2 is the coordinator for an indoubt RRS unit of recovery. Db2 has committed the thread but has not been able to resolve the RRS UR with RRS.

```
-DISPLAY THREAD(*) TYPE(I) RRSURID(*)
```

This command produces output similar to the following output:

```
- 09.27.21 STC00185  DSNV406I  ( INDOUBT THREADS -
   - COORDINATOR               STATUS      RESET URID         AUTHID
   - UNKNOWN                   COMMITTED         123456789ABC UNKNOWN
   -  V480-DB2 IS COORDINATOR FOR RRS URID C4D4FA267EB040000000001201020000
 00- DISPLAY INDOUBT REPORT COMPLETE
   - 09.27.21 STC00185  DSNV434I  ( DSNVDT NO POSTPONED ABORT THREADS FOUND
   - 09.27.21 STC00185  DSN9022I  ( DSNVDT '-DIS THD' NORMAL COMPLETION
```

Example: Displaying detailed information about threads in a distributed transaction

This example shows the XID for an active thread that is associated with an XA transaction manager:

```
-DISPLAY THREAD(*) DETAIL
```

This command produces output similar the following output:

```
#dis thd(*) det
DSNV401I  - DISPLAY THREAD REPORT FOLLOWS -
DSNV402I  - ACTIVE THREADS -
NAME     ST A   REQ ID           AUTHID    PLAN       ASID TOKEN
SERVERRX *  3 xidappl      AdMF001   DISTSERV   0036    50
 V440-XID=53514C20 00000017 00000000 544D4442
          00000000 002F93DD A92F8C4F F3000000
          0000BD
 V445-G91E1F24.BAC1.01E098172410=50 ACCESSING DATA FOR
  (  1)::FFFF:9.30.31.36
 V447--INDEX SESSID           A ST TIME
 V448-- (  1) 447:47809       W R2 052201025026 7
DISPLAY ACTIVE REPORT COMPLETE
DSN9022I  - DSNVDT '-DIS THD' NORMAL COMPLETION
```

Example: Displaying information about threads that are associated with a trusted context

This example shows a DISPLAY report of a thread associated with a trusted context.

```
-DIS THD(*)
DSNV401I  -  DISPLAY THREAD REPORT FOLLOWS -
DSNV402I  -  ACTIVE THREADS - 133
NAME          ST A REQ ID                              AUTHID    PLAN    ASID    TOKEN
BATCH     T  *  10 JOB01                      ADMF001   APPL01   0027   12
  V485-TRUSTED CONTEXT=DOMINOCONTEXT, SYSTEM AUTHID=SYSADM,
    ROLE=USRROLE
```

```
DISPLAY ACTIVE REPORT COMPLETE
DSN9022I  -  DSNVDT '-DIS THD' NORMAL COMPLETION
```

Example: Displaying information about threads during Db2 restart

This example shows the command during restart. A DSNV506I message indicates the state that Db2 is in, such as STARTING, ACTIVE, STOPPING. The message will also indicate the phase of restart or shutdown, if available.

```
-DIS THD(*) TYPE(SYSTEM)
DSNV401I  -  DISPLAY THREAD REPORT FOLLOWS -
DSNV497I  -  SYSTEM THREADS -
DB2 STARTING PHASE=Subsystem Startup Recovery Log Manager
NAME          ST A REQ ID                              AUTHID    PLAN    ASID    TOKEN
V91A      N  *   0 031.GlmTsk00            SYSOPR            002D    0
V490-SUSPENDED 05136-13:53:12.73    DSN7LSTK +00000D0C 05.45
V91A      N  *   0 023.GCSCNM03     SYSOPR            002D    0
DISPLAY SYSTEM THREAD REPORT COMPLETE
DSN9022I  )  DSNVDT '-DIS THD' NORMAL COMPLETION
```

Example: Displaying information about suspended threads

This example shows the command executing while Db2 is active. Many system threads are suspended as shown in the DSNV490I messages. In addition, system thread 023.GSCN6 03 is currently executing the -DISPLAY THREAD(*) TYPE(SYSTEM) command.

```
-DIS THD(*) TYPE(SYSTEM)
DSNV401I  )  DISPLAY THREAD REPORT FOLLOWS -
DSNV497I  )  SYSTEM THREADS -
DB2 ACTIVE
NAME          ST A REQ ID                              AUTHID    PLAN    ASID    TOKEN
V91A      N  *   0 020.PEXCTL00            SYSOPR            002E    0
V490-SUSPENDED 05136-13:53:29.55   DSNTLCTL +000004F0 16.31
V91A      N  *   0 010.PMICMS01     SYSOPR            002E    0
V490-SUSPENDED 05136-13:53:47.29   DSNB1CMS +000005E8 12.21
V91A      N  *   0.010.PMITMR02     SYSOPR            002E    0
...
...
V91A      N  *   0.004.JW007 01     SYSOPR            002D    0
V490-SUSPENDED 05136-13:54:03.60   DSNJW107 +000002B2 12.27
V91A      N  *   0.004.JTIMR 00     SYSOPR            002D    0
V91A      N  *   0.016.WVSMG 00     SYSOPR            002D    0
V490-SUSPENDED 05136-13:53:23.83   DSNWVSMG +00000534 01.54
V91A      N  *   0.026.WVZXT 01     SYSOPR            002D    0
V91A      N  *   0.016.WVSMT 01     SYSOPR            002D    0
V490-SUSPENDED 05136-13:53:48.10   DSNWVSMT +00000D7C 01.54
V91A      N  *   0.023.GSCN6 03     SYSOPR            002D    0
V501-COMMAND EXECUTING: -DIS THD(*) TYPE(SYSTEM)
DISPLAY SYSTEM THREAD REPORT COMPLETE
DSN9022I ) DSNVDT '-DIS THD' NORMAL COMPLETION
DISPLAY SYSTEM THREAD REPORT COMPLETE
DSN9022I  )  DSNVDT '-DIS THD' NORMAL COMPLETION
```

Example: Displaying information about threads when Db2 is stopping

This display shows the command executing while Db2 is stopping. The DSNV506I message identifies the phase of shutdown.

```
-DIS THD(*) TYPE(SYSTEM)
DSNV401I  -  DISPLAY THREAD REPORT FOLLOWS -
DSNV497I  -  SYSTEM THREADS -
NAME          ST A REQ ID                              AUTHID    PLAN    ASID    TOKEN
V91A      N  *   0 020.PEXCTL00            SYSOPR            002E    0
V490-SUSPENDED 05136-13:53:29.55   DSNTLCTL +000004F0 16.31
V91A      N  *   0 010.PMICMS01     SYSOPR            002E    0
V490-SUSPENDED 05136-13:53:47.29   DSNB1CMS +000005E8 12.21
V91A      N  *   0.010.PMITMR02     SYSOPR            002E    0
V91A      N  *   0.022.SPQMON01     SYSOPR            002E    0
V91A      N  *   0.014.RTSTST00     SYSOPR            002E    0
V490-SUSPENDED 05136-13:53:45.79   DSNB1TMR +00000B74 16.27
V91A      N  *   0.010.PM2PCP01     SYSOPR            002E    0
V490-SUSPENDED 05136-13:53:47.33   DSNB1TMR +00000B74 16.27
V91A     N  *    0 010.PM2CSX01     SYSOPR            002E    0
V490-SUSPENDED 05136-13:53:47.30   DSNB1TMR +00000B74 16.27
V91A     N  *   0 010.PM2PCK02       SYSOPR            002E    0
V490-SUSPENDED 05136-13:54:17.31   DSNB1TMR +00000B74 16.27
V91A     N  *   0 031.GlmTsk00       SYSOPR            002D    0
V490-SUSPENDED 05136-13:53:12.73   DSN7LSTK +00000D0C 05.45
```

```
V91A     N  *   0 023.GCSCNM03       SYSOPR           002D    0
V91A     N  *   0 004.JW007 01       SYSOPR           002D    0
V490-SUSPENDED 05136-13:54:31.62   DSNJW107 +000002B2 12.27
V91A     N  *   0 023.GSCN6 03       SYSOPR           002D    0

V501-COMMAND EXECUTING: -DIS THD(*) TYPE(SYSTEM)
DISPLAY SYSTEM THREAD REPORT COMPLETE
DSN9022I  ) DSNVDT '-DIS THD' NORMAL COMPLETION
```

Example: Displaying information about disconnected database access threads

This example shows information about an active database access thread that is disconnected.

```
-DISPLAY THREAD(*) DETAIL
```

This command produces output that is similar to the following output:

```
13.23.46           =dis thread(*) detail
13.23.46 STC00067  DSNV401I  = DISPLAY THREAD REPORT FOLLOWS -
13.23.46 STC00067  DSNV402I  = ACTIVE THREADS -
NAME     ST A   REQ ID           AUTHID   PLAN     ASID TOKEN
DISCONN  DA *     8 NONE         NONE     DISTSERV 003B    11
 V471-USIBMSY.SYEC1DB2.C1C38BDE809D=11
DISPLAY ACTIVE REPORT COMPLETE
13.23.46 STC00067  DSN9022I  = DSNVDT '-DIS THREAD' NORMAL COMPLETION
```

Example: Displaying information about inactive threads

This example shows information about an inactive connection.

```
-DISPLAY THREAD(*) TYPE(INACTIVE)
```

This command produces output that is similar to the following output:

```
- 13.27.47           =dis thread(*) type(inactive)
- 13.27.47 STC00067  DSNV401I  = DISPLAY THREAD REPORT FOLLOWS -
- 13.27.47 STC00067  DSNV424I  = INACTIVE THREADS -
- NAME     ST A   REQ ID           AUTHID   PLAN     ASID TOKEN
- SERVER   R2       0 javaw.exe    ADMF001  DISTSERV 003B    12
-  V437-WORKSTATION=KFUKUSH, USERID=admf001,
-       APPLICATION NAME=javaw.exe
-  V445-G91E1686.EF04.080107212323=12 ACCESSING DATA FOR ::FFFF:9.30.22.134
- SERVER   R2       0 db2bp.exe    ADMF001  DISTSERV 003B    14
-  V437-WORKSTATION=KFUKUSH, USERID=admf001,
-       APPLICATION NAME=db2bp.exe
-  V445-G91E1686.F104.080107212343=14 ACCESSING DATA FOR ::FFFF:9.30.22.134
- DISPLAY INACTIVE REPORT COMPLETE
- 13.27.47 STC00067  DSN9022I  = DSNVDT '-DIS THREAD' NORMAL COMPLETION
```

Example: Displaying information about threads that use an accelerator server

This example shows the details for an active thread that is using an accelerator server.

```
-DISPLAY THREAD(*) ACCEL(ACCEL1) DETAIL
```

This command produces output similar to the following output:

```
-DIS THD(*) ACC(ACCEL1) DETAIL
DSNV401I  # DISPLAY THREAD REPORT FOLLOWS -
DSNV402I  # ACTIVE THREADS -
NAME     ST A   REQ ID           AUTHID    PLAN       ASID TOKEN
BATCH    AC *   231 BI           ADMF001  DSNTEP2     0053    55
 V666 ACC=ACCEL1,ADDR=::FFFF:9.30.30.133..446:1076
DISPLAY ACTIVE REPORT COMPLETE
DSN9022I - DSNVDT '-DISPLAY THREAD' NORMAL COMPLETION
```

Example: Displaying information about threads for secondary connections

Suppose that a distributed application is using package-based continuous block fetch to access data on a server. The requester has opened a secondary connection for each cursor in the application.

You issue the following command at the requester:

```
-DB2B DIS THD(*) DETAIL
```

The command produces the following output:

```
DSNV401I  -DB2B DISPLAY THREAD REPORT FOLLOWS -
DSNV402I  -DB2B ACTIVE THREADS -
NAME     ST A   REQ ID           AUTHID   PLAN     ASID TOKEN
DB2CALL  TR *     3 RTESTSI      SYSADM   TESTS   002C     2
 V437-WORKSTATION=DB2CALL, USERID=SYSADM,
      APPLICATION NAME=RTESTSI
 V436-PGM=TESTS.TESTS, SEC=2, STMNT=170, THREAD-INFO=SYSADM:DB2CALL:
      SYSADM:RTESTSI:*:*:*:*
 V482-WLM-INFO=*:364029760:*:2127818752
 V444-USIBMSY.SYEC4B.CA57F2850247=2 ACCESSING DATA AT
  (  1)STLEC4-::FFFF:127.0.0.1..446
 V447--INDEX SESSID           A ST TIME
 V448--(  1) 1038:446         N R5 1229312543740
DISPLAY ACTIVE REPORT COMPLETE
DSN9022I  -DB2B DSNVDT '-DIS THD' NORMAL COMPLETION
```

In the V448 information, a status of R5 means that the requester is receiving a response from the server, and that the thread with LUWID USIBMSY.SYEC4B.CA57F2850247 is processing a secondary connection in support of application RTESTSI, which is using package-based continuous block fetch.

You issue the following command at the server:

```
-DB2A DIS THD(*) DETAIL
```

The command produces the following output:

```
DSNV401I  -DB2A DISPLAY THREAD REPORT FOLLOWS -
DSNV402I  -DB2A ACTIVE THREADS -
NAME     ST A   REQ ID           AUTHID   PLAN     ASID TOKEN
DB2CALL  RA *     1 RTESTSI      SYSADM   TESTS    005E     2
 V437-WORKSTATION=DB2CALL, USERID=SYSADM,
      APPLICATION NAME=RTESTSI
 V436-PGM=TESTS.TESTS, SEC=2, STMNT=0, THREAD-INFO=SYSADM:DB2CALL:SY
      SADM:RTESTSI:STATIC:41823:*:<9.30.115.64.5002.CA57F2850247>
 V442-CRTKN=9.30.115.64.5002.CA57F2850247
 V482-WLM-INFO=ALLTSO:1:1:550
 V445-G91E7340.H38A.CA57F2850247=2 ACCESSING DATA FOR
  (  1)::FFFF:127.0.0.1
 V447--INDEX SESSID           A ST TIME
 V448--(  1) 446:1038         W S5 1229312543741
DISCONN  DA *     0 NONE         NONE     DISTSERV 005E     4
 V471-USIBMSY.SYEC4DB2.CA57F2861190=4
DISPLAY ACTIVE REPORT COMPLETE
DSN9022I  -DB2A DSNVDT '-DIS THD' NORMAL COMPLETION
```

In the V448 information, a status of S5 means that the server is sending or preparing a response to the requester, and that the thread with LUWID USIBMSY.SYEC4DB2.CA57F2861190 is processing a secondary connection in support of application RTESTSI, which is using package-based continuous block fetch.

Related information

DSNV401I (Db2 Messages)

Chapter 37. -DISPLAY TRACE command (Db2)

The Db2 command DISPLAY TRACE displays a list of active traces.

An additional option to this command and additional values for a few options of this command are not described here. They are intended for service and use under the direction of IBM Support.

Abbreviation: -DIS TRACE

Environment

This command can be issued from a z/OS console, a DSN session, a DB2I panel (DB2 COMMANDS), an IMS or CICS terminal, or a program using the instrumentation facility interface (IFI).

Data sharing scope: Group or member

Authorization

To execute this command, you must use a privilege set of the process that includes one of the following privileges or authorities:

- DISPLAY privilege
- System DBADM authority
- SYSOPR authority
- SYSCTRL authority
- SYSADM authority

Db2 commands that are issued from a logged-on z/OS console or TSO SDSF can be checked by Db2 authorization using primary and secondary authorization IDs. A logged-on z/OS user ID must be defined in RACF or a similar security server.

Syntax

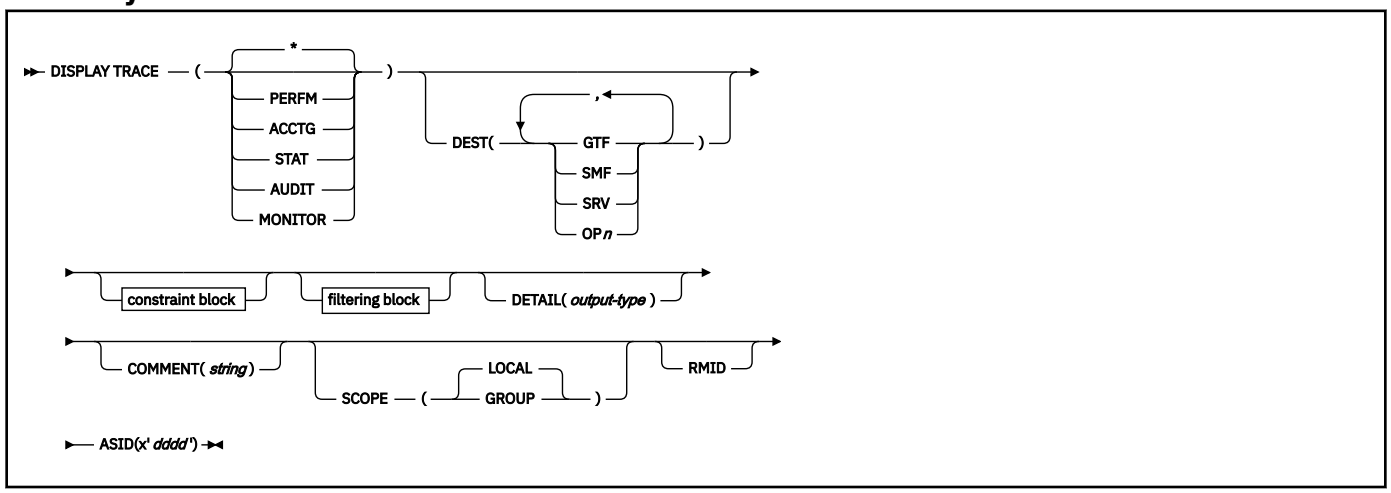

© Copyright IBM Corp. 1983, 2024

constraint block

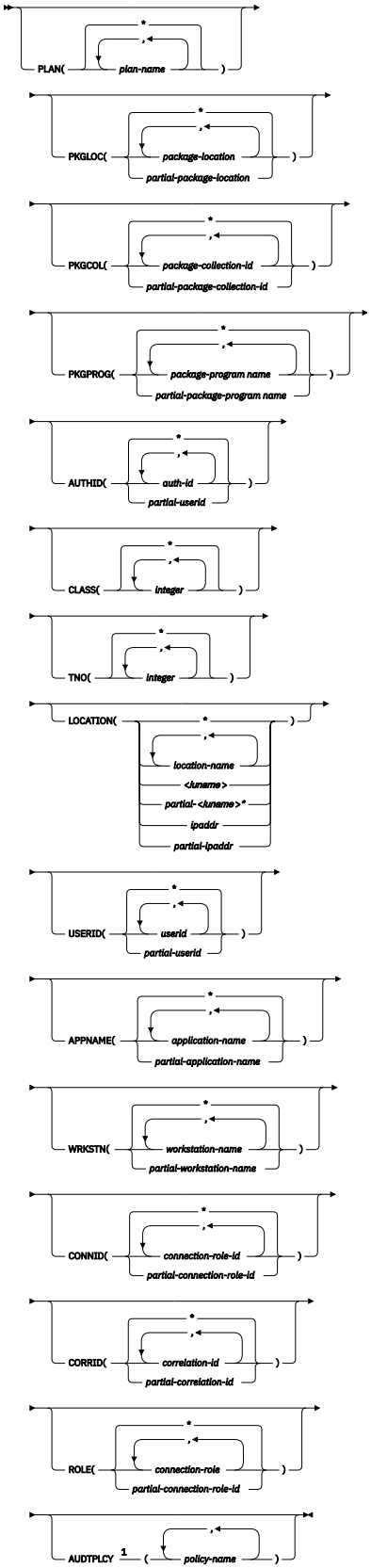

Notes:

[1] AUDTPLCY applies to trace type AUDIT. You cannot specify CLASS or IFCID with AUDTPLCY.

filtering block

```
XPLAN( plan-name , | partial-plan-name )
XPKGLOC( package-location , | partial-package-location )
XPKGCOL( package-collection-id , | partial-package-collection-id )
XPKGPROG( package-program-name , | partial-package-program-name )
XAUTHID( authorization-id , | partial-authorization-id )
XLOC( location-name , | partial-location-name | <luname> | partial-<luname>* | ipaddr | partial-ipaddr )
XUSERID( userid , | partial-userid )
XAPPNAME( application-name , | partial-application-name )
XWRKSTN( workstation-name , | partial-workstation-name )
XCONNID( connection-role-id , | partial-connection-role-id )
XCORRID( correlation-id , | partial-correlation-id )
XROLE( connection-role , | partial-connection-role-id )
```

Option descriptions

None of the options are required. The command DISPLAY TRACE lists all active traces. Each option that is used, except TNO, limits the effect of the command to active traces that were started using the same option, either explicitly or by default, with exactly the same parameter values. For example, the following command lists only the active traces that were started using the options PERFM *and* CLASS (1,2); it does *not* list, for example, any trace started using CLASS(1).

```
-DISPLAY TRACE (PERFM) CLASS (1,2)
```

(*)

Does not limit the list of traces. The **default** is (*).

The CLASS option cannot be used with DISPLAY TRACE (*).

Each of the following keywords limits the list to traces of the corresponding type.

Type (Abbrev)
Description

PERFM (P)
Performance records of specific events

ACCTG (A)
Accounting records for each transaction

STAT (S)
Statistical data

AUDIT (AU)
Audit data

MONITOR (MON)
Monitor data

DETAIL (*output-type*)

Limits the information that a trace displays based on the output type specified within parentheses.

The possible values for *output-type* are:

1
Display summary trace information: TRACE NUMBER, TYPE, CLASS, DEST

2
Display qualification trace information: TRACE NUMBER, AUTHID, LOCATION, PACKAGE, PLAN, TXACT, USERID, WORKSTATION

1,2
Display both summary and qualification information

*****
Display both summary and qualification information

If no parameter follows DETAIL, type 1 trace information is displayed.

An additional column, QUAL, is also displayed, indicating whether the trace is qualified. Part of the summary trace information, the QUAL column can be used to determine if further qualification information for the trace is available. This information can be obtained by specifying DETAIL (2) or DETAIL (*). A QUAL column value of YES indicates that additional information for this particular trace exists in the qualification trace information; a value of NO indicates that no additional information for this trace exists.

COMMENT (*string*)

Specifies that comment *string* appears in the trace output, except for the output in the resident trace tables.

string is any character string; it must be enclosed between apostrophes if it includes a blank, comma, or special character. The comment does not appear in the display; it can be recorded in trace output, but only if commands are being traced.

SCOPE
Specifies the scope of the command.

(LOCAL)
Displays the trace for the local member only.

(GROUP)
Displays the trace for all members in the data sharing group.

DEST
Limits the list to traces that were started for particular destinations. More than one value can be specified, but do not use the same value twice. If you do not specify a value for DEST, Db2 does not use the destination of where trace output is recorded to limit the list of traces displayed.

Abbreviation: D

Possible values and their meanings are:

Value
Trace destination

GTF
The generalized trace facility

SMF
The system management facility

SRV
An exit to a user-written routine

OP *n*
A specific destination. *n* can be a value from 1 to 8.

RMID
Specifies resource manager identifier. You can specify up to 8 valid RMIDs, which are one or two digit identifiers. You cannot specify RMID for accounting or statistic traces.

ASID(x'*dddd*')
Specifies that information about the trace for an address space is to be displayed.

dddd is a four-byte hexadecimal address space ID (ASID).

CLASS(*integer* , ...)
Limits the list to traces that were started for particular classes.

The **default** is CLASS(*), which does not limit the list.

TNO(*integer* , ...)
Limits the list to particular traces, identified by their trace numbers (1 to 32, 01 to 09). Up to eight trace numbers can be used. If more than one number is used, only one value each for PLAN, AUTHID, and LOCATION can be used.

The **default** is TNO(*), which does not limit the list.

PLAN(*plan-name* , ...) or XPLAN(*plan-name* , ...)
Introduces a list of specific plans for which trace information is gathered. Use PLAN to constrain the trace to the specified plans or XPLAN to exclude the specified plans. You cannot use this option for a STAT trace.

The **default** is PLAN(*) .

(*)
Displays a trace for all plans.

plan-name
The name of an application plan. You can use up to eight names. If you use more than one name, you can use only one value for AUTHID and LOCATION.

PKGLOC or XPKGLOC
Specifies the location name where the package is bound. Use PKGLOC to constrain the trace to the specified locations or XPKGLOC to exclude the specified locations.

PKGCOL or XPKGCOL
Specifies the package collection name. Use PKGCOL to constrain the trace to the specified collections or XPKGCOL to exclude the specified collections.

PKGPROG or XPKGPROG
Specifies the DBRM or program name. Use PKGPROG to constrain the trace to the specified programs or XPKGPROG to exclude the specified programs.

AUTHID(*authorization-id* , …) or XAUTHID(*authorization-id* , …)
Introduces a list of specific authorization IDs for which trace information is gathered. Use AUTHID to constrain the trace to the specified authorization IDs or XAUTHID to exclude the specified authorization IDs. The authorization IDs specified must be the primary authorization IDs. You cannot use this option for a STAT trace.

The **default** is `AUTHID( * )`.

(*)
Displays a trace for all authorization IDs.

authorization-id
Specifies an authorization ID. You can use up to eight identifiers. If you use more than one identifier, you can use only one value for PLAN and LOCATION.

LOCATION(*location-name* , ...) or XLOC(*location-name* , ...)
Specifies a list of location names for which trace information is gathered. Use LOCATION to constrain the trace to the specified locations or XLOC to exclude the specified locations. The use of the LOCATION or XLOC option precludes tracing threads that have no distributed data relationship.

location-name
Identifies the Db2 subsystems whose distributed threads you want to trace. Activates the Db2 trace for the remote TCP/IP or SNA location that you specify by *location-name*.

You can specify up to eight locations. You can specify only one location if you use more than one plan name or authorization ID.

<luname>
Activates the Db2 trace for the remote clients that are connected to DDF through the remote SNA LU name that you specified in *luname*.

ipaddr
Activates the Db2 trace for the remote clients that are connected to DDF through the remote TCP/IP host.*ipaddr* is the IP address.

(*)
Indicates that you want to display trace events that occur under distributed threads regardless of which location they are connected to. Specifying the local location name is equivalent to specifying LOCATION(*).

Clients other than Db2 for z/OS: Db2 for z/OS does not receive a location name from clients that are not Db2 for z/OS subsystems. To display a trace for a client that is not a Db2 for z/OS subsystem, enter its LUNAME or IP address. Enclose the LUNAME by the less-than (<) and greater-than (>) symbols. Enter the IP address in the form *nnn.nnn.nnn.nnn*. For example, to display a trace for a client with the LUNAME of LULA, enter the following command:

```
-DISPLAY TRACE (*) LOCATION (<LULA>)
```

To display a trace for a client with the IP address of 123.34.101.98, enter the following command:

```
-DISPLAY TRACE (*) LOCATION (::FFFF:123.34.101.98)
```

USERID or XUSERID
Specifies the user ID. Use USERID to constrain the trace to the specified user IDs or XUSERID to exclude the specified user IDs. You can specify multiple values and wildcard values as described in Usage notes.

USERID and XUSERID can be up to 16 characters.

APPNAME or XAPPNAME
Specifies the application name. Use APPNAME to constrain the trace to the specified applications or XAPPNAME to exclude the specified applications. You can specify multiple values and wildcard values as described in Usage notes.

APPNAME and XAPPNAME can be up to 32 characters.

WRKSTN or XWRKSTN
Specifies the workstation name. Use WRKSTN to constrain the trace to the specified workstations or XWRKSTN to exclude the specified workstations. You can specify multiple values and wildcard values as described in Usage notes.

WRKSTN and XWRKSTN can be up to 18 characters.

CONNID or XCONNID
Specifies the connection ID. Use CONNID to constrain the trace to the specified connections or XCONNID to exclude the specified connections.

CORRID or XCORRID
Specifies the correlation ID. Use CORRID to constrain the trace to the specified correlation IDs or XCORRID to exclude the specified correlation IDs.

ROLE or XROLE
Specifies the connection roles. Use ROLE to constrain the trace to the specified roles or XROLE to exclude the specified roles.

AUDTPLCY
A 128-byte area that contains the policy name. You can specify up to eight audit policy names. AUDTPLCY applies to trace type AUDIT. You cannot specify CLASS or IFCID with AUDTPLCY.

Usage notes

Displaying traced threads using the * wildcard
You can use the wildcard suffix, “*” to filter threads that you want to display. For example, if you specify “-DISPLAY TRACE PLAN (A,B,C*)”, Db2 will display traces A, B, CDE, CDEFG, CDEFGH, and so on. It will display traced threads “A”, “B” and all threads starting with “C”.

Displaying traced threads using the positional, (_) wildcard
You can use the positional wildcard, which is represented by the, “_” character, to display traced threads when you want the wildcard in the middle, or when you want to trace threads of a specific length. For example, if you specify “-DISPLAY TRACE PLAN (A_B), all display all traced threads that have “A” as the first character, any character for the "_," and “C” as the plan filter.

Displaying multiple traced threads at once using wildcards

You also have the option of displaying multiple traced threads based on multiple trace qualifications. For example, you can specify, “-DISPLAY TRACE PLAN (A*, B*, C*) to simultaneously display all traced threads for plan that start with “A”, “B”, and “C”. The wildcard character, “*” will display all traced threads. You can specify more complex combinations such as, “-DISPLAY TRACE PLAN (A_B*, C*, AND C/_D*)”, which will return all threads that:

- begin with “A”, have a one character wild card as the second character in the thread, have a “B” as the third character in the thread, and end with any type or number of characters (**A**D**B**IOP, **A**O**B**TYJDP,)
- begin with “C”, and end with any combination of characters (**C**DE, **C**GHKO)

- begin with “C_D” and end with any type of character combination (**C_D**EFGH, **C_D**lMNOP)

All of the possible thread combinations listed above will be returned with the command above.

You have the ability to filter multiple threads at the same time, setting specific criteria for the trace. For example, you can specify, “-DISPLAY TRACE PLAN (A) USERID (B)." This will display all traced threads where the plan thread is "A," and the user ID is "B." **Note:** When displaying traced threads, you can only specify one thread criteria for each filter for the display trace command. For example, you can specify “-DISPLAY TRACE PLAN(A,B) USERID (B) WRKSTN (E),” but you cannot specify “-DISPLAY TRACE PLAN(A, B) USERID(A, B) WRKSTN(E) because, in this example, two of the filter qualifications have two elements defined to be traced, and Db2 only allows for one attribute to have more than one trace element to be defined per trace.

Filtering traced threads that you want to display using exclude functionality

When you specify an “X” with any constraint keyword, such as “XPLAN”, when you are filtering threads, you are using the exclude functionality for the display trace command. You have the option of excluding specific types of threads you want to display when you are running trace commands. You can use the “X” character to exclude specific combinations of characters when you are running a display trace command. For example, you can specify “-DISPLAY TRACE XPLAN(A), to display all traced threads EXCEPT “A”. In this instance B, BCD, BCDE, or CD could possibly be returned.

You also have the option of excluding multiple types of threads from your trace. For example, you can specify, “-DISPLAY TRACE XPLAN (A*, B*) to display all traced threads EXCEPT those starting with “A”, with any combination of characters following “A”, and all those characters starting with “B”, with any combination of characters following “B”. Note: Specifying XPLAN (*) will exclude all threads from your search, and is not allowed. You also cannot use the wildcard in the middle of a display trace command with exclude functionality, such as, “-DISPLAY TRACE XPLAN (A*C).” You can, however, specify “-DISPLAY TRACE XPLAN (A_ _ C *)”, which will return all threads EXCEPT those starting with “A”, a variety of TWO characters next, a “C” in the fourth space, and a variety of characters at the end. The wildcard symbol cannot be placed in the middle of trace criteria.

You have the ability to display two traces at once, in order to help you optimize your tracing capabilities. For example, you can specify (-DISPLAY TRACE XPLAN (A, B, C) USERID (D))”. This tells Db2 to display all threads that are being traced for “plan” EXCEPT threads “A”, “B”, or “C”, only where the user ID = “D”.

You can introduce wildcards into your display trace commands to add more customization to your traces. For example, you can specify “-DISPLAY TRACE PLAN (C*) USERID (Z, X) XPLAN (C, D, E)”. In this example, for the thread to be traced, the plan must begin with "C," the user ID must be equal to "Z" or to "X," and the plan cannot be "C," "D," or "E." So a plan of "CB," with a user ID of "Z" would pass, and the thread being traced would be displayed, but plan C with a user ID of "X" would fail because the command specifies not to trace threads where the plan is “C”, without additional characters in the thread.

Combining trace qualifiers

You can customize the threads you trace by commanding Db2 to trace specific threads, while excluding other specific threads. For example, you can specify, “-DISPLAY TRACE USERID(A,B) XPLAN (C)” . This criteria only traces threads where the user ID is equal to “A” or “B”, and plan is NOT equal to “C”. In this example, a thread where the user ID is “A” and the plan is equal to “D” would pass, and be traced, but a thread where the user ID is “A” and plan is “C” would not pass, and would not be traced.

DISPLAY TRACE return code when there are no active traces

If you run DISPLAY TRACE in a batch environment, and no traces are active, the return code for the job step is 12.

Trace information for commands issued with group scope

If this command is issued with options that specify group scope in a Db2 data sharing member, it also runs on all other active members. IFICID 090 trace records for other group members can show that the same command was issued by the SYSOPR authorization ID from the 016.TLPKN5F correlation ID, in addition to the trace records from the member where the original command was issued. See Command scope in Db2 data sharing (Db2 Data Sharing Planning and Administration).

Output

Message DSNW127I (Db2 Messages) indicates the beginning of the output of the command.

Examples

Example: Listing all traces that have a specific destination

The following command lists all traces that have the generalized trace facility as their only destination.

```
-DISPLAY TRACE (*) DEST (GTF)
```

The output is similar to this output:

```
- 15.05.15           @DISPLAY TRACE (*) DEST (GTF)
- 15.05.15 STC00042  DSNW127I  @ CURRENT TRACE ACTIVITY IS -
- TNO TYPE   CLASS        DEST QUAL IFCID
- 04  PERFM  01,02,03,23  GTF  NO
- *********END OF DISPLAY TRACE SUMMARY DATA*********
- 15.05.15 STC00042  DSN9022I  @ DSNWVCM1 '-DISPLAY TRACE' NORMAL COMPLETION
```

Example: Listing traces of a specific trace class

The following command lists all active performance traces.

```
-DISPLAY TRACE=P
```

The output is similar to this output:

```
- 15.10.12           @DISPLAY TRACE=P
- 15.10.12 STC00042  DSNW127I  @ CURRENT TRACE ACTIVITY IS -
- TNO TYPE   CLASS        DEST QUAL IFCID
- 04  PERFM  01,02,03     GTF  NO
- 05  PERFM  08           GTF  NO
- *********END OF DISPLAY TRACE SUMMARY DATA*********
- 15.10.12 STC00042  DSN9022I  @ DSNWVCM1 '-DISPLAY TRACE' NORMAL COMPLETION
```

Example: Listing all traces for threads that are connected to a specific location

The following command lists all active audit traces for threads that are connection to Db2 subsystem with location name USIBMSTODB23.

```
-DISPLAY TRACE(AUDIT) LOCATION(USIBMSTODB23)
```

The output is similar to this output:

```
- 15.21.03 STC00042  DSNW127I  @ CURRENT TRACE ACTIVITY IS -
- TNO TYPE   CLASS        DEST QUAL IFCID
- 02  AUDIT  01           GTF  YES
- 03  AUDIT  01           SMF  YES
- *********END OF DISPLAY TRACE SUMMARY DATA*********
- 15.21.03 STC00042  DSN9022I  @ DSNWVCM1 '-DISPLAY TRACE' NORMAL COMPLETION
```

Example: Listing all traces for a specific audit policy

The following command lists trace information for all audit traces that have GTF as their only destination and audit policy AUDITADMIN.

```
-DISPLAY TRACE (AUDIT) DETAIL (2) DEST (GTF) AUDTPLCY (AUDITADMIN)
```

The output is similar to this output:

```
- 15.46.36 STC00042  DSNW143I  @ CURRENT TRACE QUALIFICATIONS ARE -
- 15.46.36 STC00042  DSNW152I  @ BEGIN TNO 04 QUALIFICATIONS:
- NO QUALIFICATIONS
- END TNO 04 QUALIFICATIONS
- 15.46.36 STC00042  DSNW185I  @ BEGIN TNO 04 AUDIT POLICIES:
- ACTIVE AUDIT POLICY: AUDITADMIN
- END TNO 04 AUDIT POLICIES
- 15.46.36 STC00042  DSNW148I  @ ******END OF DISPLAY TRACE QUALIFICATION
```

```
-  DATA******
- 15.46.36 STC00042  DSN9022I  @ DSNWVCM1 '-DISPLAY TRACE' NORMAL COMPLETION
```

Example: Using an filtering clause to display traces that do not have a specific criterion

The following command lists all active performance traces that are being written to SMF, and are not tracing activity for plan DSNREXX.

```
-DISPLAY TRACE(PERFM) DEST(SMF) XPLAN(DSNREXX)
```

The output is similar to this output:

```
- 16.02.20 STC00042  DSNW127I  @ CURRENT TRACE ACTIVITY IS -
- TNO TYPE   CLASS        DEST QUAL IFCID
- 05  PERFM  01,02,03,23  SMF  YES
- *********END OF DISPLAY TRACE SUMMARY DATA*********
- 16.02.20 STC00042  DSN9022I  @ DSNWVCM1 '-DISPLAY TRACE' NORMAL COMPLETION
```

Related reference

-STOP TRACE command (Db2)
The Db2 command STOP TRACE stops tracing.

-START TRACE command (Db2)
The Db2 command START TRACE starts Db2 traces.

-MODIFY TRACE command (Db2)
The Db2 command MODIFY TRACE changes the IFCIDs (trace events) associated with a particular active trace.

Chapter 38. -DISPLAY UTILITY command (Db2)

The Db2 command DISPLAY UTILITY displays the status of utility jobs, including utility jobs in a data sharing group.

The output from the command consists of informational messages only. One set of messages is returned for each job identified by the command. For utility jobs in a data sharing group, the output shows the member name of the system on which each utility job is running.

The status from the display represents the current status, except in a data sharing group when the utility is running on a member other than the one from which the command is issued. In that case, the status is current as of the last checkpoint.

Abbreviation: -DIS UTIL

Environment

This command can be issued from a z/OS console, a DSN session, a DB2I panel (DB2 COMMANDS), an IMS or CICS terminal, or a program using the instrumentation facility interface (IFI).

Data sharing scope: Group or member

To use the DISPLAY UTILITY command for BACKUP SYSTEM on a data sharing group, issue the command from the member on which the BACKUP SYSTEM utility is invoked. Otherwise, the current utility information is not displayed.

Authorization

None is required.

Syntax

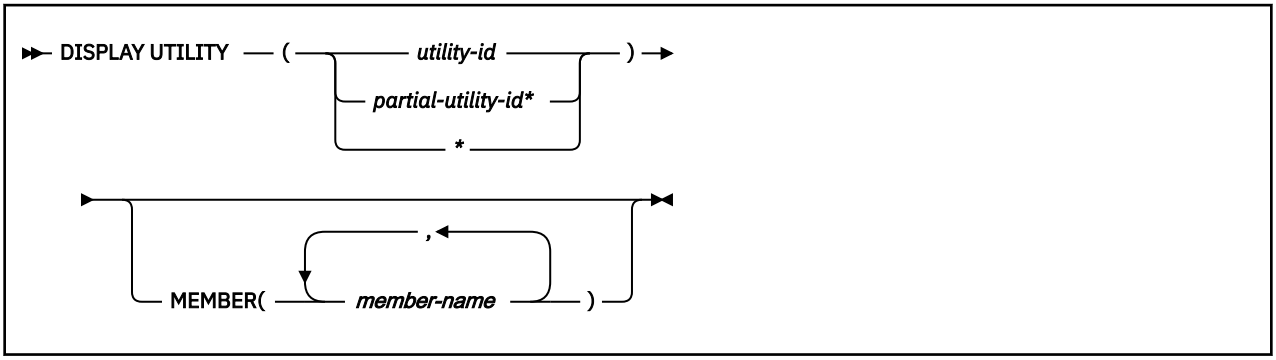

Option descriptions

Use at least one of the following options but do not use the same option more than once.

(*utility-id*)

Identifies a single job by its utility identifier, the value given for the UID parameter when the job was created.

If *utility-id* was created by the DSNU CLIST by default, it has the form of *tso-userid.control-file-name* .

If *utility-id* was omitted when the utility job was created, *utility-id* has the form *userid.jobname*.

If *utility-id* contains lowercase letters or special characters, it must be enclosed in single quotation marks (').

© Copyright IBM Corp. 1983, 2024

(*partial-utility-id)**
Identifies a set of utility jobs. A status message is shown for each utility identifier that begins with the characters of *partial-utility-id* .

For example, `-DISPLAY UTILITY(ABCD*)` shows the status of every utility job known to Db2 whose identifier begins with the characters ABCD.

(*)
Shows the status of all utility jobs known to Db2, including jobs currently running in a data sharing group.

MEMBER (*member-name* , ...)
Restricts the display for the identified utility jobs to specific members of the data sharing group. The default is to display utility jobs running on any member. In a non-data-sharing environment, the option is ignored.

One set of messages is returned for each job identified by the command.

Usage notes

DISPLAY status
The status displayed in the returned message is the status at the time the Db2 utility function received the command. Execution has proceeded, therefore the current state of the utility can be different from the state reported. For instance, the DISPLAY UTILITY command can indicate that a particular utility identifier is active, but, when the message is received by the requester, the utility job step could have terminated so that the utility identifier is no longer known to Db2.

Command response
In a data sharing environment, messages DSNU100I, DSNU105I, DSNU106I show the name of the member on which the utility job is running. If you specify a single member name in the MEMBER option and that member does not belong to the group, or if you specify a list of member names in the MEMBER option and none of those members belong to the group, the command fails and a message is issued.

Trace information for commands issued with group scope
If this command is issued with options that specify group scope in a Db2 data sharing member, it also runs on all other active members. IFICID 090 trace records for other group members can show that the same command was issued by the SYSOPR authorization ID from the 016.TLPKN5F correlation ID, in addition to the trace records from the member where the original command was issued. See Command scope in Db2 data sharing (Db2 Data Sharing Planning and Administration).

Output

Message DSNU100I (Db2 Messages) indicates the beginning of the output of the command.

Examples

Example: Displaying the status of all utility jobs in a single Db2 subsystem
The following command displays status information for all utility jobs that are currently known to a Db2 subsystem.

```
-DISPLAY UTILITY(*)
```

The output is similar to the following output.

```
DSNU100I - DSNUGDIS - USERID = SAMPID
              MEMBER =
              UTILID = RUNTS
              PROCESSING UTILITY STATEMENT 1
              UTILITY = RUNSTATS
              PHASE = RUNSTATS   COUNT = 0
              STATUS = STOPPED
              STATUS = STOPPED
```

```
              JOBNAME = STATSJB
DSN9022I - DSNUGCC  '-DISPLAY UTILITY' NORMAL COMPLETION
```

Example: Displaying the status of all utility jobs in a Db2 data sharing group

The following command displays status information for all utility jobs that are currently known to a Db2 data sharing group.

```
-DB1G DISPLAY UTILITY (*)
```

The output is similar to the following output.

```
 DSNU100I -DB1G DSNUGDIS USER = SAMPID
                      MEMBER = DB1G
                      UTILID = RUNTS
                      PROCESSING UTILITY STATEMENT 1
                      UTILITY = RUNSTATS
                      PHASE = RUNSTATS  COUNT = 0
                      STATUS = STOPPED
                      JOBNAME = STATSJB
                      TIME STARTED = 2014-01-09-10:23:20
 DSNU100I -DB1G DSNUGDIS USER = SAMPID
                      MEMBER = DB2G
                      UTILID = CHKIX1
                      PROCESSING UTILITY STATEMENT 8
                      UTILITY = CHECK
                      PHASE = UNLOAD  COUNT = 0
                      STATUS = STOPPED
                      JOBNAME = CHECKJB
                      TIME STARTED = 2014-01-09-10:30:30
 DSN9022I -DB1G DSNUGCC  '-DB1G DISPLAY UTILITY' NORMAL COMPLETION
```

Example: Displaying the status of utilities on a specific data sharing member

The following command displays the status of utilities on data sharing member DB1G.

```
-DB1G DISPLAY UTILITY (*) MEMBER (DB1G)
```

The output is similar to the following output.

```
DSNU105I -DB1G DSNUGDIS - USERID = SYSADM 973
                MEMBER = DB1G
                UTILID = REORGCP
                PROCESSING UTILITY STATEMENT 1
                UTILITY = REORG
                PHASE = LOG   COUNT = 0
                STATUS = ACTIVE
                JOBNAME = REORGJB
                TIME STARTED = 2014-01-09-10:23:20
DSNU347I -DB1G DSNUGDIS - 974
                DEADLINE = NONE
DSNU384I -DB1G DSNUGDIS - 975
                MAXRO = DEFER
                LONGLOG = CONTINUE
                DELAY = 1200 SECONDS
DSNU285I -DB1G DSNUGDIS - 976
                SWITCHTIME = 2014-01-09-14:32:15
                NEWMAXRO = 30 SECONDS
DSNU383I -DB1G DSNUGDIS - CURRENT ITERATION NUMBER = 4 977
WRITE ACCESS ALLOWED IN THIS ITERATION = YES
ITERATION BEFORE PREVIOUS ITERATION:
   ELAPSED TIME = 00:00:00
   NUMBER OF LOG RECORDS PROCESSED = 0
PREVIOUS ITERATION:
   ELAPSED TIME = 00:00:00
   NUMBER OF LOG RECORDS PROCESSED = 0
CURRENT ITERATION:
   ESTIMATED ELAPSED TIME = 00:00:00
   ACTUAL ELAPSED TIME SO FAR = 00:00:00
   ACTUAL NUMBER OF LOG RECORDS BEING PROCESSED = 0
CURRENT ESTIMATE FOR NEXT ITERATION:
   ELAPSED TIME = 00:00:00
   NUMBER OF LOG RECORDS TO BE PROCESSED = 0
DSN9022I -DB1G DSNUGCC '-DIS UTIL' NORMAL COMPLETION
```

Chapter 39. DSN command (TSO)

The TSO command DSN starts a DSN session.

For a list of commands that you can issue under the TSO command DSN, see Chapter 2, “Command types and environments in Db2,” on page 9.

DSN subcommands

The DSN command has the following subcommands:

ABEND (DSN)	The DSN subcommand ABEND causes the DSN session to terminate with abend completion code X'04E' and reason code of X'00C50101'. **Important:** The ABEND subcommand is used for diagnostic purposes only, and is intended to be used only under the direction of IBM Support. Use it only when diagnosing a problem with DSN or Db2.
BIND PACKAGE (DSN)	The DSN subcommand BIND PACKAGE builds an application package. Db2 records the description of the package in the catalog tables and saves the prepared package in the directory. BIND PACKAGE also deletes phased-out package copies.
BIND SERVICE (DSN)	The BIND SERVICE (DSN) subcommand builds an application package that represents a Db2 REST service.
BIND PLAN (DSN)	The DSN subcommand BIND PLAN builds an application plan. All Db2 programs require an application plan to allocate Db2 resources and support SQL requests made at run time.
BIND QUERY (DSN)	The DSN subcommand BIND QUERY reads the statement text, default schema, and a set of bind options from every row of DSN_USERQUERY_TABLE, and information from correlated EXPLAIN table rows. When LOOKUP(NO) is in effect, Db2 inserts the pertinent data into certain catalog tables.
DSN (TSO)	The TSO command DSN starts a DSN session.
END (DSN)	The DSN subcommand END is used to end the DSN session and return to TSO.
FREE PACKAGE (DSN)	The DSN subcommand FREE PACKAGE can be used to delete a specific version of a package, all versions of a package, or whole collections of packages.
FREE SERVICE (DSN)	The FREE SERVICE (DSN) subcommand deletes an application package that represents a Db2 REST service.
FREE PLAN (DSN)	The DSN subcommand FREE PLAN deletes application plans from Db2.
FREE QUERY (DSN)	The DSN subcommand FREE QUERY removes from certain catalog tables for one or more queries. If any of the specified queries are in the dynamic statement cache, FREE QUERY purges them from the dynamic statement cache.

© Copyright IBM Corp. 1983, 2024

Chapter 42, "FREE STABILIZED DYNAMIC QUERY subcommand (DSN)," on page 353	The DSN subcommand FREE STABILIZED DYNAMIC QUERY removes from certain catalog tables one or more stabilized dynamic queries. If any of the specified queries are in the dynamic statement cache, FREE STABILIZED DYNAMIC QUERY also purges the statements from the dynamic statement cache.
DCLGEN (DECLARATIONS GENERATOR) (DSN)	The declarations generator (DCLGEN) produces an SQL DECLARE TABLE statement and a COBOL, PL/I, or C data declaration for a table or a view named in the catalog.
REBIND PACKAGE (DSN)	The DSN subcommand REBIND PACKAGE rebinds an application package when you make changes that affect the package, but have not changed the SQL statements in the program.
REBIND PLAN (DSN)	The DSN subcommand REBIND PLAN rebinds an application plan when you make changes to the attributes of the plan, such as the package list.
REBIND TRIGGER PACKAGE (DSN)	The DSN subcommand REBIND TRIGGER PACKAGE rebinds a package for a basic trigger. You can identify basic triggers by querying the SYSIBM.SYSTRIGGERS catalog table. Blank values in the SQLPL column identify basic triggers. For advanced triggers, use the REBIND PACKAGE command instead.
RUN (DSN)	The DSN subcommand RUN executes an application program, which can contain SQL statements.
SPUFI (DSN)	The DSN subcommand SPUFI executes the SQL processor using file input.

During a DSN session, you can also enter Db2 commands, except for START DB2. Db2 commands must start with a hyphen (-). For detailed descriptions of the Db2 commands, see the commands with names that are preceded by the recognition character "-" and followed by"(Db2)" under Part 1, "About Db2 and related commands," on page 1.

You can also enter comments by starting them with an asterisk (*).

During a DSN session, you can also issue TSO commands, except for FREE, RUN, TEST, and TIME. To use TSO TEST to debug an application program, run it with the DSN command; for example:

```
TEST '
prefix
.SDSNLOAD(DSN)' CP
```

Important: The ABEND subcommand is used for diagnostic purposes only, and is intended to be used only under the direction of IBM Support. Use it only when diagnosing a problem with DSN or Db2.

Percent commands are not recognized during a DSN session, they are only supported by the TSO command processor.

Environment

A DSN session runs under TSO in either foreground or background mode. When you run it in background mode, you are not prompted for corrections or additional required information.

You can also start a DSN session from a CLIST running in either foreground or background mode.

Data sharing scope: Member

Authorization

None is required for the DSN command, but authorization is required for most subcommands.

Syntax

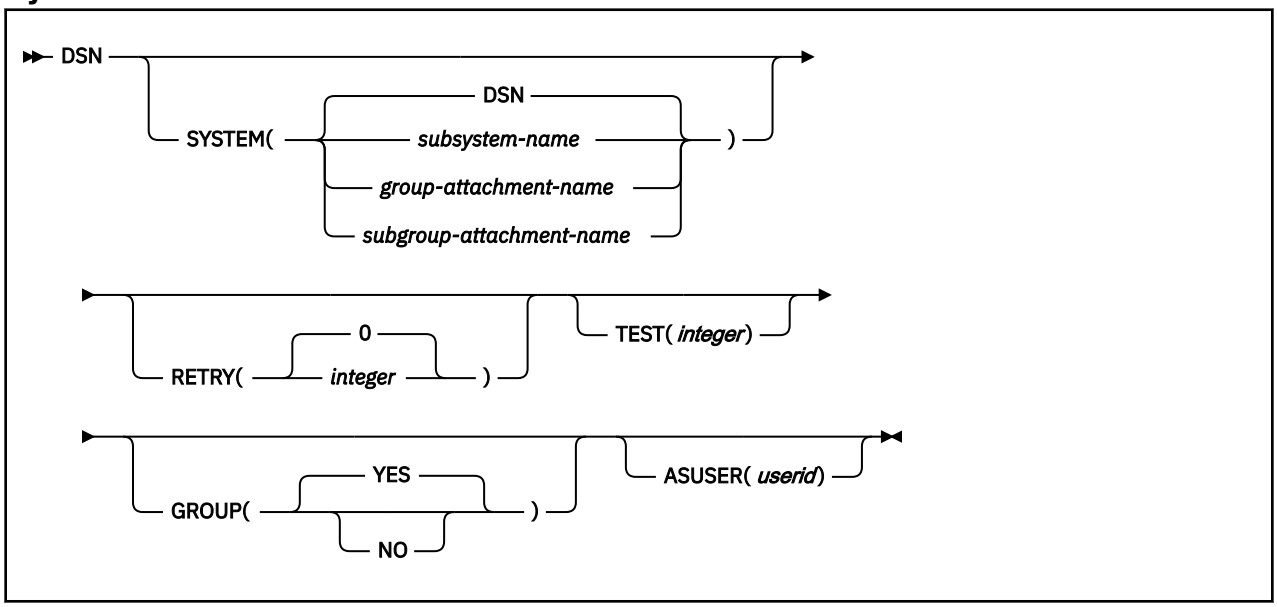

Option descriptions

None of the following options are required.

SYSTEM

(*subsystem-name*)
Specifies the name of the Db2 subsystem.

(*group-attachment-name*)
Specifies the group attachment name of the data sharing group.

(*subgroup-attachment-name*)
Specifies the subgroup attachment name of the data sharing group.

The **default** is **SYSTEM(DSN).** This value can be modified during Db2 installation.

RETRY(*integer*)
Specifies the number (integer) of additional times connection to the Db2 subsystem should be attempted if Db2 is not up or the maximum number of batch connections has been reached when DSN is issued. Retries occur at 30-second intervals.

The **default** is **RETRY(0)**. The maximum number of retries is 120.

TEST(*integer*)
Specifies the last two digits (integer) of the module name in order to trace a single DSN module. Specify a number greater than 100 to trace all DSN modules. DSN trace information messages are written to the TSO SYSTSPRT DD statement, and optionally, to the DSNTRACE DD statement.

GROUP

(YES)
Specifies that group attachment processing is considered when the system is not active.

(NO)
Specifies that group attach processing is not considered.

ASUSER(*userid*)
Specifies a user ID to associate with the trusted connection for the current DSN session.

A trusted connection is established if the primary authorization ID and jobname matches a trusted context defined in Db2. The user ID that you specify as ASUSER goes through the standard

authorization and connection exit processing to pick up the primary and secondary IDs. If the primary authorization ID is allowed to use the trusted connection without authentication, Db2 establishes the trusted connection for the ASUSER user ID. The primary authorization ID, any secondary authorization IDs, and any role associated with the ASUSER user ID are now in effect for the trusted connection.

If the primary authorization ID associated with the user ID that you specify in the ASUSER option is not allowed to use the trusted connection or requires authentication information the connection request fails.

Db2 retains the ASUSER value only for the life of the DSN session.

Usage notes

Beginning a DSN session: Issue the DSN command to begin a DSN session, which allows you to enter DSN subcommands. The following rules govern the session:

- In foreground operation, you are prompted for input by the prompt string DSN at the terminal. In background mode, your input is read from the SYSTSIN data set.
- Except for delimited table names in the DCLGEN command, input in lowercase letters is changed to uppercase.
- If duplicate keywords of any subcommand are specified, only the last of these keywords is processed. For example, if both MEMBER(*dbrm-member-name1*) and MEMBER(*dbrm-member-name2*) are specified with BIND PLAN, Db2 receives only the latter, MEMBER(*dbrm-member-name2*).
- If ATTENTION (PA1) is pressed during a DSN session, and PROMPT is specified in the TSO user profile, message DSNE005 appears: `EXECUTION IS INTERRUPTED, ENTER C TO CANCEL, OR ANY OTHER REPLY TO RESUME THE` *`subcommand`* `SUBCOMMAND`.

  If you enter C, the current subcommand is canceled and the current Db2 connection terminates; a new one is established, and another DSN prompt appears. Any other reply, except ATTENTION, causes the current subcommand to continue from the point at which it was interrupted.

  If a DSN session is started from a CLIST, or a CLIST is executed under DSN, CONTROL PROMPT must be specified in the CLIST in order to receive message DSNE005.
- After a command is processed during a DSN session, you are prompted for input. That cycle continues until you end the session.
- You can end the session by taking one of the following actions:
  - Issue the END subcommand. Control is passed to TSO.
  - Press ATTENTION and respond to the message by pressing ATTENTION again.
  - Issue another DSN command. The old session ends and a new one begins.

DSN return code processing: At the end of a DSN session, register 15 contains the highest value used by any DSN subcommand in the session or by any program run using the RUN subcommand. Your run time environment might format that value as a return code. The value does not, however, originate in DSN.

Establishing trusted context using TSO and DB2I: DB2I runs under TSO using ISPF services. The DB2I facility provides an ISPF front end for tools such as SPUFI and DCLGEN and tasks such as preparing Db2 programs and binding plans and packages. The DB2I Defaults Panel includes the field AS USER. Use the AS USER field to specify an authorization name to use for the current session that is associated with the trusted connection. The trusted connection is established when the TSO logon ID matches the system authorization ID and jobname defined for a trusted context. The ASUSER field is always blank on entry to DB2I. If you enter a value in the AS USER field it is passed to all TSO attach (DSN) calls by using the ASUSER option of the DSN (TSO) command.

Attachment facilities for monitors: For long-running programs such as monitors, use a programmable attachment facility like CAF or RRSAF, instead of using the Db2 TSO attachment facility. The TSO attachment facility is not designed for use in a long-running program. Use of the TSO attachment facility for that type of program might cause storage or recovery problems.

Examples

Example: Starting a DSN session with multiple retry attempts

The following command starts a DSN session. If the attempt to connect to Db2 fails, up to five retries, at 30 second intervals, are made.

```
DSN SYSTEM (DB2) RETRY (5)
```

Example: Starting a DSN session, running a program, and ending a DSN session

The following example shows the commands to start a DSN session, run a program, and end the DSN session.

```
TSO prompt :  READY
USER enters:  DSN SYS(SSTR)
DSN prompt :  DSN
USER enters:  RUN PROGRAM(MYPROG)
DSN prompt :  DSN
USER enters:  END
TSO prompt :  READY
```

Related concepts

DSN command processor (Db2 Application programming and SQL)

Related tasks

Issuing commands from TSO terminals (Db2 Administration Guide)

Related reference

ADMIN_COMMAND_DSN stored procedure (Db2 SQL)

Chapter 40. DSNH command procedure (TSO CLIST)

The DSNH command procedure (a TSO CLIST) is a powerful yet easy method of preparing an application program for execution.

The DSNH command procedure (a TSO CLIST) prepares a program for execution, and executes it if it runs under TSO. By issuing a single command, you can select numerous options required for the preparation of an application and execute it under TSO.

DSNH processing is a sequential process that can include any of the actions listed in the following table.

Individual steps or a sequence of steps can be performed, and you can end the process at any point you choose. Any steps in the process that are skipped must have previously been completed successfully by DSNH.

Table 11. DSNH actions and the corresponding step names

For invoking the...	Use step name
PL/I macro processor	MP
Db2 precompiler	PC
CICS command language translator	TR
DSN BIND PLAN subcommand for binding a plan	BI
DSN BIND PACKAGE subcommand for binding a package	BP
Compiler or assembler for your program	CO
A C compiler prelink utility for including compile-time parameters	PL
Link-editor to produce an executable load module	LE
DSN RUN subcommand to execute the program	RU

Note: The step names are used in the heading of Table 13 on page 322.

Environment

The DSNH CLIST can run in TSO foreground or in batch under the TSO terminal monitor program. DB2I uses the DSNH CLIST on the precompiler panel to control program preparation. You can pass DSNH parameters from DB2I panels on the "Other options" lines.

Data sharing scope: Member

Authorization

DSNH requires no special authorization. However, if DSNH binds a package or plan, or runs a plan, authorization is required to perform those actions:

- See the BIND PACKAGE authorization information for the privileges that are necessary to bind a package.
- See the BIND PLAN authorization information for the privileges that are necessary to bind a plan.
- See the RUN authorization information for the privileges that are necessary to run a plan.

© Copyright IBM Corp. 1983, 2024

Syntax

```
►► DSNH ── INPUT( data-set-name ) ──┬──────────────────────────┬──►◄
                                    │   ┌──────────────────┐   │
                                    │   ▼                  │   │
                                    └── clist-parameter ───┘   ┘
```

Summary of DSNH CLIST parameters

The CLIST parameters provide the processing options for each step; specify them when you execute DSNH. Some parameters are used for more than one step, as indicated in Table 13 on page 322. This table shows where each parameter is used, using the following notation:

- Y in any cell shows that the option listed at the beginning of the row is used in the step whose name appears at the top of the column.
- * in any cell indicates that the option listed at the beginning of the row is used in *another* step which affects the step whose name appears at the top of the column.

Notation of CLIST parameters for the BIND PLAN and BIND PACKAGE steps: Many parameters of BIND PLAN and of BIND PACKAGE provide the same function and are spelled alike. CLIST parameters for BIND PLAN and BIND PACKAGE are differentiated from general parameters and from each other by prefixes. A parameter name prefixed by the letter B applies to the BIND PLAN subcommand; a parameter name prefixed by the letter P applies to BIND PACKAGE. The following table shows the possible variations for a single parameter name.

Table 12. DSNH CLIST prefixing rules

Parameter value	Function or subcommand	Example
parameter	If no prefix is specified, the parameter applies to a single function or subcommand.	`DBRMLIB`
B/*parameter*	The prefix B is used to indicate that this variation of the parameter applies only to the BIND PLAN step.	`B/DBRMLIB`
P/*parameter*	The prefix P is used to indicate that this variation of the parameter applies only to the BIND PACKAGE step.	`P/DBRMLIB`

In the following table, a prefix is separated from the Db2 parameter name by a slash (/). Refer to Table 11 on page 321 for an explanation of the two-letter step names.

Table 13. Summary of DSNH CLIST parameters

OPTIONS	MP	PC	TR	BI	BP	CO	PL	LE	RU
ACQUIRE				Y					*
P/ACTION				Y	Y				
ASMLIB						Y			
ASMLOAD						Y			
P/BDMEM				Y	Y				
P/BIND				Y	Y				
P/BLIB				Y					
P/BnLIB				Y					
P/BMEM				Y	Y				

Table 13. Summary of DSNH CLIST parameters (continued)

OPTIONS	MP	PC	TR	BI	BP	CO	PL	LE	RU
CACHESIZE				Y					
CCLINK							Y		
CCLLIB								Y	
CCLOAD						Y			
CCMSGS						Y	Y		
CCOLIB							Y		
CCPLIB								Y	
CCPMSGS							Y		
CCSID		Y							
CCSLIB						Y			
P/CICS				Y	Y				
CICSCOB			Y					Y	
CICSLLIB			Y					Y	
CICSOPT			Y						
CICSPRE			Y					Y	
CICSPLIB			Y					Y	
CICSVER			Y					Y	
CICSXLAT			Y						
CLIB	Y					Y			
CnLIB	Y					Y			
COBICOMP								Y	
COBILINK								Y	
COBIPLNK							Y		
COBIPMSG							Y		
COBLIB								Y	
COBLOAD						Y			
COBSOM							Y		
COB2CICS								Y	
COB2LIB								Y	
COB2LOAD						Y			
COMPILE						Y			
CONNECT		Y							
CONTROL	Y		Y	*		Y		Y	Y
COPTION	Y					Y			

Table 13. Summary of DSNH CLIST parameters (continued)

OPTIONS	MP	PC	TR	BI	BP	CO	PL	LE	RU
COPY					Y				
COPYVER					Y				
CPPCLASS							Y		
CPPCLINK							Y		
CPPCLLIB								Y	
CPPCSLIB						Y			
CPPLLIB							Y		
CPPPMSGS							Y		
CPPSLIB						Y			
CPPUTIL						Y			
CURRENTDATA				Y	Y				
CURRENTSERVER				Y					
DATE		Y							
P/DBPROTOCOL				Y	Y				
P/B/DBRMLIB		Y		Y	Y				
DECARTH		Y							
DECIMAL		Y				*			
P/DEFER				Y	Y				
P/DEGREE				Y	Y				
DELIMIT		Y	Y			Y			
P/DISABLE				Y	Y				
DISCONNECT				Y	-				
P/DLIBATCH				Y	Y				
P/DYNAMICRULES				Y	Y				
P/ENABLE				Y	Y				
ENTRY								Y	
EXPLAIN				Y	Y				
P/FLAG	Y	Y	Y	Y	Y	Y			
FORTLIB								Y	
FORTLOAD						Y			
HOST	Y	Y	Y	*		Y		Y	Y
P/IMSBMP				Y	Y				
P/IMSMPP				Y	Y				
IMSPRE								Y	

Table 13. Summary of DSNH CLIST parameters (continued)

OPTIONS	MP	PC	TR	BI	BP	CO	PL	LE	RU
INPUT	Y	Y	*	*		Y		Y	Y
P/ISOLATION				Y	Y				
P/KEEPDYNAMIC				Y	Y				
LINECOUNT	Y	Y	Y			Y			
LINK								Y	
LLIB								Y	
LnLIB								Y	
LOAD								Y	Y
LOPTION								Y	
MACRO	Y		Y						
NEWFUN		Y							
NOFOR	Y								
P/NODEFER				Y	Y				
P/OPTHINT				Y	Y				
OPTIONS		Y	Y					Y	Y
OUTNAME	Y	Y				Y		Y	Y
P/OWNER				Y	Y				
PACKAGE					Y				
PARMS									Y
PASS		Y							
P/PATH				Y	Y				
PCLOAD		Y							
PKLIST				Y					
PLAN				Y					Y
PLIB		Y							
PnLIB		Y							
PLI2LIB								Y	
PLILIB								Y	
PLILOAD	Y					Y			
PLIPLNK								Y	
PLIPMSG								Y	
POPTION							Y		
PRECOMP		Y							
PRELINK							Y		

Table 13. Summary of DSNH CLIST parameters (continued)

OPTIONS	MP	PC	TR	BI	BP	CO	PL	LE	RU
PRINT	Y	Y	Y			Y		Y	
PSECSPAC	Y	Y	Y			Y			Y
PSPACE	Y	Y	Y			Y			Y
P/QUALIFIER				Y	Y				
RCTERM	Y	Y	Y	Y	Y	Y	Y		Y
P/RELEASE				Y	Y				
REMOTE					Y				
P/REOPT				Y	Y				
REPLVER					Y				
RETAIN				Y					
RUN		Y	Y					Y	Y
RUNIN									Y
RUNOUT									Y
SOMDLLI						Y	Y		
SOURCE	Y	Y	Y			Y			
SPACEUN	Y	Y	Y			Y			Y
SQL		Y							
SQLDELIM		Y							
SQLERROR					Y				
SQLRULES				Y					
STDSQL		Y							
SUFFIX	Y	Y							
SYSTEM				*	*				Y
TERM	Y	Y				Y		Y	
TIME		Y							
P/VALIDATE				Y	Y				
VERSION		Y							
WORKUNIT	Y	Y	Y			Y			
WSECSPAC	Y	Y	Y			Y			
WSPACE	Y	Y	Y			Y			
XLIB								Y	
XREF	Y	Y				Y		Y	

General parameter descriptions

Due to similarities in name and function, the CLIST parameters for BIND PLAN and BIND PACKAGE are described separately from the parameters in Table 14 on page 327. For a summary of:

- BIND PLAN parameters, refer to Table 15 on page 340
- BIND PACKAGE parameters, refer to Table 16 on page 343

The only parameter that is required on the DSNH statement is INPUT; the others are optional. In Table 14 on page 327:

- Parameter values must be enclosed between parentheses.
- Parameter values need not be enclosed between apostrophes, except in either of the following cases:
  - If the value is a list of tokens with separators, the value must be enclosed between apostrophes.
  - If the value is a data set name, your user identifier is added as a prefix. To avoid the prefix, enclose the data set name between sets of three apostrophes.
- Most parameter values that are data set names (*dsname*) cannot include member names. Exceptions are noted in the parameter descriptions.
- Underlined values are defaults. Default names can be changed to names specific to your site when Db2 is installed.

Table 14. General DSNH CLIST parameters

Parameter	Value	Comments
ASMLIB	*dsname*	Specifies a data set to be used as the standard MACLIB for High Level Assembler. The **default** is '''SYS1.MACLIB'''.
ASMLOAD	*dsname*	Specifies a data set that contains the High Level Assembler load module. *dsname* can include a member name. The **default** is '''SYS1.LINKLIB(ASMA90)'''.
CCLINK	*dsname*	Specifies a data set that contains the IBM Language Environment® prelink editor utility invocation load module that is to be used for preparing C programs. *dsname* can include a member name. The **default** is '''CEE.SCEERUN(EDCPRLK)'''.
CCLLIB	*dsname*	Specifies a data set that contains the linkage editor include modules for the C compiler routines. The **default** is '''CEE.SCEELKED'''.
CCLOAD	*dsname*	Specifies a data set that contains the C compiler invocation load module. *dsname* can include a member name. The **default** is '''CBC.SCCNCMP(CCNDRVR)'''.
CCMSGS	*dsname*	Specifies a data set that contains the C compiler messages. This data set is required only for C/370. *dsname* can include a member name. The **default** is '''EDC.V1R2M0.SEDCDMSG(EDCMSGE)'''.
CCSID	*integer*	Specifies the CCSID for source SQL statements.

Table 14. General DSNH CLIST parameters (continued)

Parameter	Value	Comments
CCOLIB	NONE *dsname*	Specifies that the data set that contains C object modules is included during the execution of the prelink utility step.
CCPLIB	NONE *dsname*	Specifies a data set that contains include modules for PL/I routines. This parameter is used only for IBM C/370 Version 2 or earlier.
CCPMSGS	*dsname*	Specifies a data set that contains the message library that is to be used by the IBM prelink editor when preparing C programs. The **default** is '''CEE.SCEEMSGP(EDCPMSGE)'''.
CCSLIB	*dsname*	Specifies a data set that contains the C compiler headers. The **default** is '''CEE.SCEEH.H'''.
CICSOPT	NONE *option-list*	Specifies a list of additional CICS translator options. See the appropriate CICS application programming reference for information about translator options. The **default**, NONE, specifies no additional options.
CICSPRE	*prefix*	Specifies the prefix for the CICS libraries. The library names are: *prefix*.LOADLIB for translators *prefix*.PL1LIBn for PL/I include *prefix*.COBLIB for COBOL include Leave this parameter blank to use CICSLLIB, CICSPLIB, CICSCOB. The **default** is blank.
CICSLLIB	*dsname*	Specifies the CICS load library. To use this library, leave the CICSPRE parameter blank. The **default** is set on installation panel DSNTIP3.
CICSPLIB	*dsname*	Specifies the CICS PL/I library. To use this library, leave the CICSPRE parameter blank. The **default** is set on installation panel DSNTIP3.
CICSCOB	*dsname*	Specifies the CICS COBOL library. To use this library, leave the CICSPRE parameter blank. The **default** is set on installation panel DSNTIP3.
CICSVER	21 31 33 41	Specifies the CICS release. This field is ignored because current releases of CICS do not require DSNH to handle release-specific considerations.
CICSXLAT	NO YES	Specifies whether to execute the CICS command translator. This parameter is effective only if you use RUN(CICS). You cannot use this parameter with the MARGINS option of the translator. The **default** is YES. The DB2I panel **default** is NO.

Table 14. General DSNH CLIST parameters (continued)

Parameter	Value	Comments
CLIB C *n*LIB	NONE *dsname*	Specifies a data set that contains host language source statements to be included by the compiler or assembler. The parameters C *n* LIB (where *n* can be 2, 3, or 4) are extensions of CLIB, which is used to simplify passing a list of data set names. Use the **default**, NONE, to specify no data set.
COBICOMP	*dsname*	Specifies the IBM COBOL data set that is required for compilation. The **default** is '''IGY.SIGYCOMP'''.
COBILINK	*dsname*	Specifies the IBM COBOL data set that is required for link edit. The **default** is '''CEE.SCEELKED'''.
COBIPLNK	*dsname*	Specifies a data set that contains the IBM Environment prelink editor utility invocation load module that is to be used for preparing COBOL programs. *dsname* can include a member name. The **default** is '''CEE.SCEERUN(EDCPRLK)'''.
COBIPMSG	*dsname*	Specifies a data set that contains the message library that is to be used by the IBM prelink editor when preparing COBOL programs. *dsname* can include a member name. The **default** is '''CEE.SCEEMSGP(EDCPMSGE)'''.
COBLIB	*dsname*	Specifies the linkage editor include library that is to be used for OS/VS COBOL routines. This parameter is obsolete.
COBLOAD	*dsname*	Specifies a data set that contains the OS/VS COBOL compiler load module. This parameter is obsolete.
COBSOM	*dsname*	Specifies the IBM System Object Model (SOM) data set that is required for access to SOM objects. This parameter is obsolete.
COB2CICS	*dsname*	Specifies the linkage editor include library that is to be used for VS COBOL II CICS routines. This parameter is obsolete.
COB2LIB	*dsname*	Specifies the linkage editor include library that is to be used for the VS COBOL II or COBOL/370 routines. This parameter is obsolete.
COB2LOAD	*dsname*	Specifies a data set that contains the VS COBOL II or COBOL/370 compiler load module. This parameter is obsolete.

Table 14. General DSNH CLIST parameters (continued)

Parameter	Value	Comments
COMPILE	YES NO	Specifies whether to execute the compiler or assembler if the precompile step is successful.
CONNECT	(1) (2)	Specifies whether a CONNECT SQL statement should be processed as a type 1 CONNECT or a type 2 CONNECT statement. The DSNH(TSO CLIST) command does not accept the CT(1) and CT(2) abbreviations for this precompiler option. The **default** is CONNECT(2).
CONTROL	NONE CONLIST LIST SYMLIST	Specify to help you trace the allocation of non-existent data sets. Use this parameter if you have a problem without an obvious cause. CONLIST displays CLIST commands after substitution for symbols and before command execution. LIST displays TSO commands after substitution for symbols and before command execution. SYMLIST displays all executable statements (TSO commands and CLIST statements) before substitution for symbols.
COPTION	NONE *string*	Specifies a list of compiler or assembler options. For more information, refer to the manual that describes the compiler or assembler options for the specific language you are using. For a list of restrictions on some options, see COBOL Options. NONE specifies no options.
CPPCLASS	*dsname*	Specifies the data set that contains C++ class libraries. The **default** is '''CBC.SCLBCPP'''.
CPPCLINK	*dsname*	Specifies the data set that contains the IBM Language Environment prelink editor utility invocation load module that is to be used for preparing C programs. The **default** is '''CEE.SCEERUN(EDCPRLK)'''.
CPPCLLIB	*dsname*	Specifies the data set for the C linkage editor automatic call library that is used by the C++ compiler. The **default** is '''CEE.SCEELKED'''.
CPPCSLIB	*dsname*	Specifies a data set that contains the C compiler headers that are used by the C++ compiler. The **default** is '''CEE.SCEEH.H'''.
CPPLLIB	*dsname*	Specifies a data set that contains the C++ prelink automatic call library. The **default** is '''CEE.SCEECPP'''.
CPPPMSGS	*dsname*	Specifies the data set that contains the message library that is to be used by the IBM prelink editor when preparing C++ programs. *dsname* can include a member name. The **default** is '''CEE.SCEEMSGP(EDCPMSGE)'''.

Table 14. General DSNH CLIST parameters (continued)

Parameter	Value	Comments
CPPSLIB	*dsname*	Specifies the data set that contains C++ header files for class libraries. The **default** is '''CBC.SCLBH.HPP'''.
CPPUTIL	*dsname*	Specifies the data set that contains procedures to set up and execute the C++ compiler. The **default** is '''CBC.SCCNUTL'''.
DATE	ISO JIS USA EUR LOCAL	Specifies the format of date values that are to be returned, which overrides the format that is specified as the location default. The **default** is the value that is supplied when Db2 is installed, and is written in the data-only application defaults load module.
DBRMLIB	DEFAULT *dsname(member)* NONE	Specifies the partitioned data set, and an optional member name, that contains the DBRM library and member name that is used during the Db2 precompile step. Because you can specify individual DBRM member and library names during each individual phase, you must use the DBRMLIB parameter and associated prefixes to identify a specific phase. DBRMLIB specifies the DBRM library and member that is defined on the DBRMLIB DD statement during Db2 precompiler processing. DEFAULT indicates that the same DBRM library data set that is defined for the Db2 precompiler process (DBRMLIB(*parameter*)) is also used on the LIBRARY(*dsname*) subcommand keyword. If the precompiler DBRMLIB is not specified, the default generated DBRMLIB library that is based on the INPUT data set name is used. *dsname* is generated using the DSNH OUTNAME parameter value, or its default, TEMP, with the constant DBRM appended to the prefix; for example, *outname* .DBRM or TEMP.DBRM. *member* is obtained from the data set member name that is specified on the DSNH INPUT parameter or from the data set name as follows: • Given INPUT(*outname*.DBRM(*dbrmmem*)): – *outname*.DBRM(*dbrmmem*) - If the member name is specified – *outname*.DBRM(*dbrm*) - If no member name is specified NONE indicates that no LIBRARY(*dsname*) subcommand keyword is specified on invocation.
DECARTH	DEFAULT 15 31	Specifies the maximum precision of decimal numbers. DEFAULT designates the value chosen, during installation, for the DECIMAL ARITHMETIC field on the APPLICATION PROGRAMMING DEFAULTS panel. A value of 15 specifies that decimal arithmetic operations on decimal values with precision 15 or less are performed in accordance with the existing rules for determining the precision and scale of the result. A value of 31 specifies that decimal arithmetic operations on decimal values with precision 15 to 31 are performed in accordance with new rules for determining the precision and scale of the result. DECARTH is ignored for Fortran.

Table 14. General DSNH CLIST parameters (continued)

Parameter	Value	Comments
DECIMAL	COMMA PERIOD	Specifies the decimal point indicator for decimal and floating point literals. DECIMAL is valid only for COBOL programs; PERIOD is forced for all other programs. COMMA makes the indicator a comma. PERIOD makes the indicator a period. The **default** is the value of the DECIMAL POINT field, set on the Db2 APPLICATION PROGRAMMING DEFAULTS panel during installation.
DELIMIT	DEFAULT APOST QUOTE	Specifies the APOST or QUOTE precompiler option to indicate the string delimiter that is used within host language statements. DELIMIT is effective only for COBOL programs; APOST is forced for all other programs. DEFAULT designates the value chosen during installation for the STRING DELIMITER field on the APPLICATION PROGRAMMING DEFAULTS panel. APOST specifies the apostrophe as the string delimiter for host language statements. QUOTE specifies a quotation mark as the string delimiter for host language statements.
ENTRY	*entry-name*	Specifies the entry point that is assigned by the linkage editor. The **default** depends on the host language and the value of RUN. • For the PL/I language, the ENTRY value default is: – NONE if the RUN value is CICS – PLISTART for any other RUN value. • For assembler language, the ENTRY value default is DLITASM if the RUN value is IMS. • For COBOL, the ENTRY value default is DLITCBL if the RUN value is IMS. • For any other language, the ENTRY value default is NONE (no specified entry point) for any RUN value.
FLAG	I C E W	Specifies the messages that you want to see. Use one of the following values to show messages of the corresponding types: **I** All informational, warning, error, and completion messages **W** Only warning, error, and completion messages **E** Only error and completion messages **C** Only completion messages

Table 14. General DSNH CLIST parameters (continued)

Parameter	Value	Comments
FORTLIB	*dsname*	Specifies the linkage editor include library that is to be used for Fortran routines. The **default** is '''SYS1.VSF2FORT'''.
FORTLOAD	*dsname*	Specifies a data set that contains the VS Fortran compiler load module. *dsname* can include a member name. The **default** is '''SYS1.VSF2VCOMP(FORTVS2)'''.
HOST	ASM C CPP IBMCOB FORTRAN PLI	Defines the host language within which SQL statements are embedded. COBOL and COB2 are also acceptable values but are obsolete. If your program is one of the following types of programs, you cannot use DB2I to prepare it: • A COBOL program that uses object-oriented extensions • A C++ program that uses object-oriented extensions and consists of more than one compilation unit The **default** is the value of the LANGUAGE DEFAULT field, set on the Db2 APPLICATION PROGRAMMING DEFAULTS panel during installation.
IMSPRE	*prefix*	Specifies the prefix for RESLIB, which is used for routines that are to be included by the linkage editor for IMS. The **default** is IMSVS.
INPUT	*dsname*	Specifies the data set that contains the host language source and SQL statements. *dsname* can include a member name.
LINECOUNT	*integer*	Specifies how many lines, including headings, are to be printed on each page of printed output. The **default** is 60.
LINK	YES NO	Specifies whether to execute the linkage editor after successful completion of compilation or assembly. YES indicates that the linkage editor is to be executed. The DSNHLI entry point from the precompiler is directed to the appropriate language interface module that is specified by the RUN parameter. NO indicates that linkage editor processing is to be bypassed.
LLIB L*n*LIB	NONE *dsname*	Specifies a data set that contains object or load modules that are to be included by the linkage editor. The parameters L *n* LIB (where *n* can be 2, 3, or 4) are extensions of LLIB, which is used to simplify passing a list of data set names. The LLIB and L*n*LIB libraries are concatenated with the XLIB library and the linkage editor include libraries for the specific host language. Object and load module libraries must not be mixed in this concatenation. Use the **default,** NONE, to specify no data set.

Table 14. General DSNH CLIST parameters (continued)

Parameter	Value	Comments
LOAD	*dsname*	Specifies a data set that is to contain the output from the linkage editor (the load module). *dsname* can include a member name. The **default** is RUNLIB.LOAD.
LOPTION	NONE *string*	Specifies a list of linkage editor options. For information about the options you can use, see the appropriate z/OS publication. Use the **default,** NONE, to give no options.
MACRO	YES NO	Specifies whether the macro preprocessor is to be executed before the precompilation of a PL/I program. If the PL/I macro processor is used, the PL/I *PROCESS statement must not be used to pass options to the PL/I compiler. The COPTION parameter of the DSNH command can be used to pass the needed options to the PL/I compiler.
NEWFUN	V8 V9 V10 V11 V12	Specifies whether to allow syntax for functions that are introduced by a new version of Db2. NEWFUN(NO) and NEWFUN(YES) are deprecated.
NOFOR	NO YES	Specifies whether all FOR UPDATE OF clauses in static SQL statements are optional. When you specify NOFOR(YES), the FOR UPDATE OF clause is optional. Positioned updates can be made to any columns that the user has authority to update. When you specify NOFOR(NO), any query that appears in a DECLARE CURSOR statement must contain a FOR UPDATE OF clause if the cursor is used for positional updates. The clause must designate all the columns that the cursor can update. The option is implied when the STDSQL(YES) option is in effect.
OPTIONS	NO YES	Specifies whether to print the options that are used when executing the precompiler or the CICS command translator with the output listing.
OUTNAME	TEMP *string*	Specifies the prefix that is used to form intermediate data set names. *string* must not be enclosed between apostrophes and must not have the same initial character as the *dsname* for INPUT. It cannot contain special characters.
PARMS	NONE *string*	Specifies a parameter string that is to be passed to the compiled program during its execution. This parameter is valid only if the run time execution environment requested is TSO. If CAF is specified as the run time execution environment, this parameter is ignored. Use the **default,** NONE, to pass no parameter string.

Table 14. General DSNH CLIST parameters (continued)

Parameter	Value	Comments
PASS	ONE or 1 TWO or 2	Specifies how many passes the precompiler is to use. One pass saves processing time, but requires that declarations of host variables in the program precede any reference to those variables. PASS has no effect for COBOL or Fortran; ONE is forced. The **default** is ONE or 1 for PL/I and C. The **default** is TWO or 2 for assembler.
PCLOAD	*dsname*	Specifies the precompiler load module. *dsname* can include a member name. The **default** is '*(DSNHPC)'.
PLAN	*plan-name*	Specifies the application plan that is created by the bind process. The **default** plan name is the first of the following available choices defined in the INPUT data set: • DBRM member name • Leftmost qualifier *plan-name* must not be DEFAULT. If no name is found, a plan is not created.
PLIB P*n*LIB	NONE *dsname*	Specifies the data set that contains host language source or SQL statements included by the SQL INCLUDE statement during precompilation. The parameters P*n*LIB (where *n* can be 2, 3, or 4) are extensions of PLIB, which is used to simplify passing a list of data set names. Use NONE to specify no data set.
PLI2LIB	*dsname*	Specifies the linkage editor common library that is used for PL/I routines. This parameter is obsolete.
PLILIB	*dsname*	Specifies the linkage editor base library that is used for PL/I routines. The **default** is '''CEE.SCEELKED'''.
PLILOAD	*dsname*	Specifies a data set that contains the PL/I compiler load module. *dsname* can include a member name. The **default** is '''IBM.SIBMZCMP(IBMZPLI)'''.
PLIPLNK	*dsname*	Specifies the data set that contains the IBM Environment prelink editor utility invocation load module that is to be used for preparing PL/I programs. *dsname* can include a member name. The **default** is '''CEE.SCEERUN(EDCPRLK)'''.
PLIPMSG	*dsname*	Specifies the data set that contains the message library that is to be used by the IBM prelink editor for preparing PL/I programs. *dsname* can include a member name. The **default** is '''CEE.SCEEMSGP(EDCPMSGE)'''.

Table 14. General DSNH CLIST parameters (continued)

Parameter	Value	Comments
POPTION	NONE *string*	Specifies a list of the C compiler language prelink utility options Use the **default,** NONE, to give no options.
PRECOMP	YES NO	Specifies whether to precompile.
PRELINK	YES NO	Specifies whether to execute the C compiler prelink utility to make your program reentrant. This utility concatenates compile-time initialization information (for writable static) from one or more text decks into a single initialization unit. If this step is requested, it must follow the compiler step and precede the link-edit step. This parameter can apply to IBMCOB that also has a prelink step. Whether the prelink step applies to C or IBMCOB is determined by the choice of values C, CPP, or IBMCOB for the HOST parameter. Descriptions of the prelink process for C and IBMCOB are presented in their respective language publications. If PRELINK(YES) is specified or defaulted for a HOST language compiler that does not support the prelink utility, Db2 will issue warning message DSNH760I and prelink utility processing will be bypassed.
PRINT	NONE *dsname* LEAVE TERM	Specifies where to send printed output, including the lists of options, source, cross-reference, error, and summary information. The **default**, NONE, omits printed output. *dsname* specifies a data set that is to be used for the output. Do not enclose *dsname* between apostrophes. The current user profile is prefixed to *dsname*. The following suffixes are also added: • SYSCPRT.LIST for PL/I macro listings (these listings are overwritten by the compiler listings) • PCLIST for precompiler listings • CXLIST for CICS command translator listings • LIST for compiler listings The PRINT parameter is ignored for the compiler step when HOST(CPP) is specified. • SYSOUT.PRELLIST for C prelink utility listings • LINKLIST for link-edit listings LEAVE sends output to the specified print data set. You can allocate the print data set in one of the following ways: • Dynamically • In the JCL that is used to run the DSNH CLIST (if in batch mode) • With the TSO ALLOCATE command (before running DSNH) TERM sends output to the terminal.
PSECSPAC	*integer*	Specifies the amount of secondary space to allocate for print data sets, in the units given by SPACEUN. The **default** is 20.

Table 14. General DSNH CLIST parameters (continued)

Parameter	Value	Comments
PSPACE	*integer*	Specifies the primary size of the print data sets in the units given by SPACEUN. The **default** is 20.
RCTERM	*integer*	Specifies the minimum value of the return code from the precompile step that prevents execution of later steps. The **default** is 8.
RUN	TSO or YES BATCH or NO CAF CICS IMS RRSAF	Specifies whether to execute the compiled program if the previous steps are successful, and, if so, in which environment it executes. Your choice for the RUN parameter might affect your choice for LLIB. TSO or YES indicates that the application program is to be scheduled for execution in the TSO environment, and executes the compiled program. BATCH or NO indicates that the application program is not to be scheduled for execution, and defaults to TSO as the execution environment. CAF indicates that the application program is to be scheduled for execution in the call attachment facility environment. Specify BATCH or NO with CAF to indicate that the application program is not to be scheduled for execution, but to identify CAF as the execution environment. (BATCH,CAF) or (NO,CAF) CICS indicates that the application program is not to be scheduled for execution, and identifies CICS as the run time execution environment. CICS applications cannot run in TSO. IMS indicates that the application program is not to be scheduled for execution, and identifies IMS as the run time execution environment. IMS applications cannot run in TSO. RRSAF indicates that the application program is not to be scheduled for execution, and identifies RRSAF as the run time execution environment. RRSAF applications cannot run in TSO.
RUNIN	TERM *dsname* LEAVE NONE	Specifies where to get input for the RUN step. The **default**, TERM, gets input from the terminal. *dsname* specifies a data set that is to be used for the input. LEAVE gets input from SYSIN if the only steps taken are LINK and RUN. LEAVE gets input from FT05F001 if the language is Fortran. Do not use LEAVE in any other case. NONE allocates no input file.
RUNOUT	TERM *dsname* LEAVE NONE	Specifies where to send output from the RUN step. The **default**, TERM, sends output to the terminal. *dsname* specifies a data set to receive output. LEAVE sends output to SYSPRINT if the only steps taken are LINK and RUN. LEAVE sends output to FT06F001 if the language is Fortran. Do not use LEAVE in any other case. NONE allocates no output file for the RUN step.

Table 14. General DSNH CLIST parameters (continued)

Parameter	Value	Comments
SOMDLLI	*dsname*	Specifies the name that of the SOM/MVS DLL import library. This parameter is obsolete.
SOURCE	NO YES	Specifies whether the source code and diagnostics are to be printed with output from the precompiler, CICS command translator, and compiler.
SPACEUN	TRACK CYLINDER	Specifies the unit of space for PSPACE and WSPACE. TRACK makes the space unit one track. CYLINDER makes the space unit one cylinder.
SQL	DB2 ALL	Specifies how to interpret SQL statements and check syntax for use by either Db2 for z/OS or other database management systems. The **default**, DB2, indicates that SQL statements are to be interpreted and syntax is to be checked for use by Db2 for z/OS. SQL(DB2) is the recommended mode for DRDA access when the server is a Db2 subsystem. ALL indicates that SQL statements are to be interpreted for use by database management systems that are not Db2 for z/OS. SQL syntax checking is deferred until bind time so that the remote location can bind the resulting DBRM. When SQL(ALL) is in effect, the precompiler issues an informational message if SAA reserved words are used as identifiers. SQL(ALL) is the recommended mode if you have written your application to be executed in a environment that is not Db2 for z/OS. The **default** is SQL(DB2).
SQLDELIM	DEFAULT APOSTSQL QUOTESQL	Specifies the APOSTSQL or QUOTESQL precompiler option, to set the SQL string delimiter and, by implication, the SQL escape character within SQL statements. Whichever character is chosen to be the string delimiter, the other is used for the SQL escape character. This parameter is effective only for COBOL. For PL/I, Fortran, and assembler language programs, the precompiler forces the APOSTSQL option. DEFAULT designates the value that is chosen during installation for the SQL STRING DELIMITER field on the APPLICATION PROGRAMMING DEFAULTS panel. APOSTSQL specifies that the string delimiter is the apostrophe (') and the escape character is the quotation mark ("). QUOTESQL specifies that the string delimiter is the quotation mark (") and the escape character is the apostrophe (').
STDSQL	NO YES or 86	Specify whether to interpret SQL using a subset of ANSI rules. NO specifies that Db2 rules are used. YES or 86 automatically implies that the NOFOR option is used.

Table 14. General DSNH CLIST parameters (continued)

Parameter	Value	Comments
SUFFIX	YES NO	Specifies whether the TSO standard naming convention must be followed. That convention adds a TSO authorization ID prefix and a host language suffix to the name of the input data set (unless that name is enclosed between apostrophes, or already ends in the appropriate suffix). For example, names become *userid.name*.COBOL, *userid.name*.PLI, *userid.name*.Fortran, or *userid.name*.ASM.
SYSTEM	*subsystem-name*	Specifies the Db2 subsystem name as it is known to the z/OS operating system. The **default** is the installation-defined subsystem name (often DSN).
TERM	TERM *dsname* LEAVE NONE	Specifies where to send terminal output, including error information, error statements, and summary information. The **default**, TERM, sends output to the terminal. *dsname* specifies a data set that is to be used for terminal output. Do not enclose *dsname* between apostrophes. The following suffixes are added to *dsname* : • PCTERM for precompiler output • LIST for compiler output LEAVE sends the output to the current allocation for SYSTERM. NONE omits terminal output.
TIME	ISO JIS USA EUR LOCAL	Specifies the format for time values that are to be returned, overriding the format that is specified as the location default. There is **no default** because this option overrides the default previously specified.
VERSION	*version-id* AUTO	Specifies the name of the version ID for the program and associated DBRM during the Db2 precompile step. AUTO specifies that the consistency token is used to generate the version ID. If the consistency token is a timestamp, the timestamp is converted into ISO character format and used as the version identifier. The **default** is no version ID if specified at precompiler invocation.
WORKUNIT	*unit*	Specifies the device to use for print and work data sets. *unit* can be a unit name or a device type. The **default** in batch mode is any eligible device. The **default** in any other mode is the UADS unit name for the current TSO user.
WSECSPAC	*integer*	Specifies the amount of secondary space to allocate for work data sets, in the units given by SPACEUN. The **default** is 20.

Table 14. General DSNH CLIST parameters (continued)

Parameter	Value	Comments
WSPACE	*integer*	Specifies the primary size of the work data sets in the units given by SPACEUN. The **default** is 20.
XLIB	*dsname*	Specifies the linkage editor include library that is to be used for Db2 routines. The **default** is '''*prefix*.SDSNLOAD'''.
XREF	NO YES	Specifies whether a sorted cross-reference listing of symbolic names that are used in source statements is to be printed with output from the precompiler.

Note: Precompiler options do not affect ODBC behavior.

DSNH/DSN subcommand summary

Table 15 on page 340 and Table 16 on page 343 differentiate the functions that support BIND PLAN and BIND PACKAGE. Each table associates the DSNH CLIST parameter and its corresponding DSN BIND PLAN or BIND PACKAGE subcommand keyword, if any. In general:

- The function and value of a CLIST parameter is identical to that of its corresponding DSN subcommand keyword unless otherwise noted.
- A DSNH parameter value of NONE indicates that the corresponding DSN keyword is not specified on subcommand invocation. Exceptions are noted where applicable.

DSNH CLIST/BIND PLAN subcommand comparison

Table 15. DSNH CLIST/ BIND PLAN subcommand summary

DSNH CLIST		BIND PLAN subcommand		
Parameter	**Value**	**Keyword**	**Value**	**Comments**
ACQUIRE	USE ALLOCATE	ACQUIRE	USE ALLOCATE	
ACTION	REPLACE ADD	ACTION	REPLACE ADD	
BDMEM	DEFAULT [1] *dbrm-member-name* NONE[2]	MEMBER	*dbrm-member-name*	[1] DBRM member name, which is obtained from one of the following sources, in the order listed: • BDBRMLIB member name • DBRMLIB member name • INPUT member name, or generated using *dsname*. [2] Keyword is not specified on subcommand invocation.
BIND	YES [1] NO[2]	*(command-verb)*		[1] Execute BIND PLAN subcommand. [2] Do not execute BIND PLAN subcommand.

Table 15. DSNH CLIST/ BIND PLAN subcommand summary (continued)

DSNH CLIST		**BIND PLAN subcommand**		
Parameter	**Value**	**Keyword**	**Value**	**Comments**
BLIB	NONE [1] *dsname*	LIBRARY	*dbrm-pds-name*	[1] Keyword is not specified on subcommand invocation.
B*n*LIB[1]	NONE [2] *dsname*	LIBRARY	*list of dbrm-pds-names*	[1] *n* can be 2, 3, 4, 5, 6, 7, or 8. Specify the first data set name by using the BLIB parameter. Specify any additional data set names by using this parameter. [2] No additional data set names.
BMEM[1]	NONE [2] *list of dbrm-member-names*	MEMBER	*list of dbrm-member-names*	[1] Specify the first DBRM member name using the BDMEM parameter and any additional member names individually using this parameter. [2] No additional DBRM member names.
CACHESIZE	NONE [1] *decimal-value* [2]	CACHESIZE	*decimal-value* [2]	[1] The size is provided by the subsystem. [2] Specify a size from 0 to 4096 bytes.
CICS	NONE [1] *application-ids*	CICS	*application-ids*	[1] Keyword is not specified on subcommand invocation.
CURRENTDATA	YES NO NONE	CURRENTDATA	YES NO	
CURRENTSERVER	NONE [1] *location-name*	CURRENTSERVER	*location-name*	
DBPROTOCOL	NONE DRDA PRIVATE	DBPROTOCOL	DRDA PRIVATE	If you specify PRIVATE, your application cannot include SQL statements that were added to Db2 after DB2 version 7.
BDBRMLIB	DEFAULT [1] *dsname(member)* NONE[2]	LIBRARY	*dbrm-pds-name*	[1] The precompiler DBRMLIB data set is used. If the precompiler DBRMLIB is not specified, the default-generated DBRMLIB library that is based on the INPUT data set is used. [2]Keyword is not specified on subcommand invocation.
DEFER	NONE [1] PREPARE	DEFER	PREPARE	[1] Keyword is not specified on subcommand invocation.

Table 15. DSNH CLIST/ BIND PLAN subcommand summary (continued)

DSNH CLIST		BIND PLAN subcommand		
Parameter	**Value**	**Keyword**	**Value**	**Comments**
DEGREE	1 ANY	DEGREE	1 ANY	
DISABLE	NONE BATCH CICS DB2CALL IMS DLIBATCH IMSBMP IMSMPP RRSAF	DISABLE	NONE BATCH CICS DB2CALL IMS DLIBATCH IMSBMP IMSMPP RRSAF	
DISCONNECT	EXPLICIT AUTOMATIC CONDITIONAL	DISCONNECT	EXPLICIT AUTOMATIC CONDITIONAL	
DLIBATCH	NONE [1] *list of connection-ids*	DLIBATCH	*connection-name*	[1]Keyword is not specified on subcommand invocation.
DYNAMICRULES	RUN BIND	DYNAMICRULES	RUN BIND	
ENABLE	NONE * BATCH CICS DB2CALL IMS DLIBATCH IMSBMP IMSMPP RRSAF	ENABLE	NONE * BATCH CICS DB2CALL IMS DLIBATCH IMSBMP IMSMPP RRSAF	
EXPLAIN	NO YES	EXPLAIN	NO YES	
FLAG	I C E W	FLAG	I C E W	
IMSBMP	NONE [1] *imsid*	IMSBMP	*imsid*	[1]Keyword is not specified on subcommand invocation.
IMSMPP	NONE [1] *imsid*	IMSMPP	*imsid*	[1]Keyword is not specified on subcommand invocation.
ISOLATION	RR RS CS UR	ISOLATION	RR RS CS UR	
KEEPDYNAMIC	NO YES	KEEPDYNAMIC	NO YES	
NODEFER	NONE [1] PREPARE	NODEFER	PREPARE	[1]Keyword is not specified on subcommand invocation.
OPTHINT	(' ') (' *hint-id* ')	OPTHINT	(' ') (' *hint-id* ')	
OWNER	NONE [1] *authorization-id*	OWNER	*authorization-id*	[1]Keyword is not specified on subcommand invocation.
PATH	*(schema-name)* (USER)*(schema-name, USER ...)*	PATH	*(schema-name)* (USER)*(schema-name, USER ...)*	
PKLIST	NONE [1] *list of collection-ids and package- names*	PKLIST	*list of collection-ids and package-names*	[1] The package names are not specified on subcommand invocation.

Table 15. DSNH CLIST/ BIND PLAN subcommand summary (continued)

DSNH CLIST		BIND PLAN subcommand		
Parameter	**Value**	**Keyword**	**Value**	**Comments**
PLAN	*plan-name* [1]	PLAN *(primary-keyword)*	*plan-name*	[1] *plan-name* must not be DEFAULT. The default *plan-name* is the first of the following available choices that are defined in the INPUT data set: • DBRM member name • Left-most qualifier If no name is found, a plan is not created.
QUALIFIER	NONE [1] *implicit-qualifier*	QUALIFIER	*qualifier-name*	[1]Keyword is not specified on subcommand invocation.
RELEASE	COMMIT DEALLOCATE	RELEASE	COMMIT DEALLOCATE	
REOPT	NONE [1] VARS	REOPT	NONE ALWAYS ONCE AUTO	[1]Keyword is not specified on subcommand invocation.
RETAIN	NO [1] YES[2]	RETAIN		[1]Keyword is not specified on subcommand invocation. [2] Keyword is specified on subcommand invocation.
SQLRULES	DB2 STD	SQLRULES	DB2 STD	
VALIDATE	RUN BIND	VALIDATE	RUN BIND	

DSNH CLIST/BIND PACKAGE subcommand comparison

Table 16. DSNH CLIST/ BIND PACKAGE subcommand summary

DSNH CLIST		BIND PACKAGE subcommand		
Parameter	**Value**	**Keyword**	**Value**	**Comments**
PACTION	REPLACE ADD	ACTION	REPLACE ADD	
PBIND	NO [1] YES[2]	*(command-verb)*		[1] Do not execute BIND PACKAGE subcommand. [2] Execute BIND PACKAGE subcommand.
PCICS	NONE [1] *application-ids*	CICS	*application-ids*	[1]Keyword is not specified on subcommand invocation.
COPY	NONE [1] *collection-id. package-id*	COPY	*collection-id. package-id*	[1]Keyword is not specified on subcommand invocation.
COPYVER	*version-id*	COPYVER	*version-id*	

Table 16. DSNH CLIST/ BIND PACKAGE subcommand summary (continued)

DSNH CLIST		**BIND PACKAGE subcommand**		
Parameter	**Value**	**Keyword**	**Value**	**Comments**
PCURRENTDATA	NO YES NONE	CURRENTDATA	YES NO	
PDBPROTOCO	NONE DRDA PRIVATE	DBPROTOCOL	DRDA PRIVATE	If you specift PRIVATE, your application cannot include SQL statements that were added to Db2 after DB2 version 7.
PDBRMLIB	DEFAULT [1] *dsname(member)* NONE[2]	LIBRARY	*dbrm-pds-name*	[1] The precompiler DBRMLIB data set is used. If the precompiler DBRMLIB is not specified, the default-generated DBRMLIB library that is based on the INPUT data set is used. [2]Keyword is not specified on subcommand invocation.
PDEFER	NONE [1] PREPARE	DEFER	PREPARE	[1]Keyword is not specified on subcommand invocation.
PDEGREE	1 ANY	DEGREE	1 ANY	
PDISABLE	NONE BATCH CICS DB2CALL IMS DLIBATCH IMSBMP IMSMPP REMOTE RRSAF	DISABLE	NONE BATCH CICS DB2CALL IMS DLIBATCH IMSBMP IMSMPP REMOTE RRSAF	
PDLIBATCH	NONE [1] *list of connection-ids*	DLIBATCH	*connection-name*	[1]Keyword is not specified on subcommand invocation.
PDMEM	DEFAULT [1] *dbrm-member- name* NONE[2]	MEMBER	*dbrm-member-name*	[1] DBRM member name, which is obtained from one of the following sources, in the order listed: • PDBRMLIB member name • DBRMLIB member name • INPUT member name, or generated using *dsname* [2]Keyword is not specified on subcommand invocation.
PDYNAMICRULES	NONE RUN BIND DEFINE INVOKE	DYNAMICRULES	RUN BIND DEFINE INVOKE	
PENABLE	NONE * BATCH CICS DB2CALL IMS DLIBATCH IMSBMP IMSMPP REMOTE RRSAF	ENABLE	NONE * BATCH CICS DB2CALL IMS DLIBATCH IMSBMP IMSMPP REMOTE RRSAF	
EXPLAIN	NO YES	EXPLAIN	NO YES	

Table 16. DSNH CLIST/ BIND PACKAGE subcommand summary (continued)

DSNH CLIST		**BIND PACKAGE subcommand**		
Parameter	**Value**	**Keyword**	**Value**	**Comments**
PFLAG	I C E W	FLAG	I C E W	
PIMSBMP	NONE [1] *imsid*	IMSBMP	*imsid*	[1]Keyword is not specified on subcommand invocation.
PIMSMPP	NONE [1] *imsid*	IMSMPP	*imsid*	[1]Keyword is not specified on subcommand invocation.
PISOLATION	NONE [1] RR RS CS UR NC	ISOLATION[1]	RR RS CS UR NC	[1] For local packages, the default value is the same as that of the plan that is appended at execution time. For remote packages, the default value is RR.
PKEEPDYNAMIC	NONE NO YES	KEEPDYNAMIC	NO YES	
PNODEFER	NONE[1] PREPARE	NODEFER	PREPARE	[1]Keyword is not specified on subcommand invocation.
POPTHINT	(' ') (' *hint-id* ')	OPTHINT	(' ') (' *hint-id* ')	
POWNER	NONE [1] *authorization-id*	OWNER	*authorization-id*	[1]Keyword is not specified on subcommand invocation.
PACKAGE	DEFAULT [1] *location-name. collection-id*	PACKAGE	*location-name. collection-id*	[1] Member name that is defined in the INPUT parameter data set, or the data set name if no member name was specified.
PPATH	*(schema-name)* (USER)*(schema-name, USER , ...)*	PATH	*(schema-name)* (USER)*(schema-name, USER , ...)*	
PQUALIFIER	NONE [1] *implicit-qualifier*	QUALIFIER	*qualifier-name*	[1]Keyword is not specified on subcommand invocation.
PRELEASE	NONE [1] COMMIT DEALLOCATE	RELEASE[1]	COMMIT DEALLOCATE	[1] For local packages, the default value is the same as that of the plan that is appended at execution time. For remote packages, the default value is NONE.
REOPT	NONE [1] VARS	REOPT	NONE ALWAYS ONCE AUTO	[1]Keyword is not specified on subcommand invocation.
REMOTE	NONE [1] *location-name, <luname>*	REMOTE	*network-name*	[1]Keyword is not specified on subcommand invocation.
REPLVER	NONE [1] *version-id*	REPLVER	*version-id*	[1] *version-id* is not specified on subcommand invocation.
SQLERROR	NOPACKAGE CONTINUE	SQLERROR	NOPACKAGE CONTINUE	
PVALIDATE	RUN BIND	VALIDATE	RUN BIND	

Usage notes

CICS translator: Do not use CICS translator options in the source language for assembler programs; pass the options to the translator with the CICSOPT option.

COBOL options: The COBOL DYNAM option has several restrictions:

- You cannot use the option with CICS.
- You must use the VS COBOL II library or the Language Environment (z/OS Language Environment) library.
- To use the option with TSO or batch, the SDSNLOAD library must precede the IMS RESLIB in the step library, job library, or link list concatenations.
- To use the option with IMS, the IMS RESLIB must precede DSNLOAD.

Several COBOL options require DD statements that are not provided by the DSNH CLIST, as shown in the following table.

Table 17. COBOL options that require additional DD statements

Option	Statements required for...
CDECK	SYSPUNCH
COUNT	SYSCOUNT, SYSDBG, SYSDBOUT, SYSUT5, a debug file
DECK	SYSPUNCH
DUMP	SYSABEND, SYSDUMP, or SYSUDUMP
FDECK	SYSPUNCH
FLOW	SYSCOUNT, SYSDBG, SYSDBOUT, SYSUT5, a debug file
LVL	SYSUT6
STATE	SYSCOUNT, SYSDBG, SYSDBOUT, SYSUT5, a debug file
SYMDUMP	SYSCOUNT, SYSDBG, SYSDBOUT, SYSUT5, a debug file
SYST	SYSOUT
SYSx	SYSOUx
TEST	SYSUT5

COBOL parameters: The BUF and SIZE parameters passed to the COBOL compiler might need to be changed.

COPTION: Do not use the COPTION parameter to specify values for the LINECOUNT, SOURCE, TERM, and XREF compiler options; use the DSNH LINECOUNT, SOURCE, TERM, and XREF keywords.

Fortran and PL/I considerations: Variable-format input records are not supported.

Library limits: At most, eight bind libraries, four precompile libraries, four compile libraries, and four link-edit libraries can exist.

User-supplied application defaults module (dsnhdecp): The following steps are required to enable DSNH CLIST to load your user-supplied *dsnhdecp* module rather than the Db2-supplied *dsnhdecp* module:

1. The JOBLIB or STEPLIB concatenation of any job or TSO userid that calls DSNH must allocate the library where the user-supplied *dsnhdecp* module resides (usually *prefix*.SDSNEXIT) before it allocates the library where the Db2-supplied *dsnhdecp* module resides (*prefix*.SDSNLOAD).
2. The DSNH call should include the PCLOAD parameter, coded as follows:

```
PCLOAD('*(DSNHPC)')
```

Link-edit:

- DSNH cannot process programs that need additional link-edit control statements and cannot link-edit programs that use the call attachment facility.
- You cannot use the NOLOAD and SYNTAX link-edit options.

NONE is a reserved word: NONE cannot be the name of an input or a load library, or the value of the string passed with PARMS.

SQL host variables: You must explicitly define SQL host variables.

SYSPROC: If compilation is done, the SYSPROC data set must include the Db2 CLIST library.

WORKUNIT parameter: You must use the WORKUNIT parameter when running the DSNH CLIST in batch mode. This ensures that the temporary and intermediate data sets are allocated to the correct devices.

Examples

Example: Using DSNH to prepare and execute a COBOL application

The following command precompiles, binds, compiles, link-edits, and runs the COBOL program in data set *prefix*.SDSNSAMP(DSN8BC4).

- The compiler load module is in SYS1.LINKLIB (IKFCBL00).
- Additional load modules to be included are in *prefix*.RUNLIB.LOAD and *prefix*.SDSNSAMP.
- The load module is to be put into the data set *prefix*.RUNLIB.LOAD(DSN8BC4).
- The plan name is DSN8BC81 for the bind and run.
- DCLGEN data from *prefix*.SRCLIB.DATA is required for the precompile.
- The DSNH CLIST is in your SYSPROC concatenation.

```
DSNH INPUT('
prefix
.SDSNSAMP(DSN8BC4)'') -
  COBLOAD('SYS1.LINKLIB(IKFCBL00)'') -
  LLIB('
prefix
.RUNLIB.LOAD'') -
  L2LIB('
prefix
.SDSNSAMP'') -
  LOAD('
prefix
.RUNLIB.LOAD'') -
  PLAN(DSN8BC81) -
  PLIB('
prefix
.SRCLIB.DATA'')
```

Example: Using DSNH to prepare and execute a PL/I application

The following command precompiles, binds, compiles, link-edits, and runs the COBOL program in data set *prefix*.SDSNSAMP.PLI(DSN8BP4).

- The program is written in PL/I; the macro pass is not needed.
- The PL/I compiler options MAP and LIST are to be used.
- Additional load modules to be included are in *prefix*.RUNLIB.LOAD and *prefix*.SDSNSAMP.
- The PL/I optimizing compiler load module is in library SYS2.LINKLIB(IEL0AA).
- The Db2 subsystem identifier is SSTR.
- The load module is put into the data set *prefix*.RUNLIB.LOAD(DSN8BC4).
- Printed output is sent to the following data sets:

Output	Data set
Precompiler listings	*prefix*.PROG.PCLIST
Compiler listings	*prefix*.PROG.LIST
Link-edit listings	*prefix*.PROG.LIST

- The plan name is DSN8BC81 for the bind and run.
- The DCLGEN data from *prefix*.SRCLIB.DATA is required for the precompile.

```
DSNH INPUT('
prefix
.SDSNSAMP(DSN8BP4)'') -
  HOST(PLI) MACRO(NO) -
  COPTION ('MAP LIST') -
  LLIB('
prefix
.RUNLIB.LOAD'') -
  L2LIB('
prefix
.SDSNSAMP'') -
  PLILOAD('SYS2.LINKLIB(IEL0AA)'') -
  SYSTEM(SSTR) -
  LOAD('
prefix
.RUNLIB.LOAD'') -
  PRINT(PROG) -
  PLAN(DSN8BC81) -
  PLIB('
prefix
.SRCLIB.DATA'')
```

The COPTION parameters are enclosed between single apostrophes so that they are passed by TSO as a single parameter. If a single token is being passed as a parameter, no apostrophes are needed. That same rule applies to the PARMS and CICSOPT parameters.

If a data set name is being passed as a parameter, and you want TSO to add your user prefix, no apostrophes are needed. If the usual TSO prefixing and suffixing must not be performed, the data set name must be enclosed between sets of three apostrophes if the CLIST is executed implicitly, and sets of six apostrophes if the CLIST is executed explicitly.

The user prefix for that example is *prefix*; if it had been SMITH, the listing data set names would be as shown in the preceding example, except that SMITH would be used as the first level qualifier. For example, the compiler listings would have gone to SMITH.PROG.LIST.

Example: Using DSNH to prepare and execute a COBOL application

The following command precompiles, binds, compiles, link-edits, and runs the COBOL program in data set *prefix*.SDSNSAMP(DSN8BC4).

- The compiler load module is in SYS1.LINKLIB (IKFCBL00).
- Additional load modules to be included are in *prefix*.RUNLIB.LOAD and *prefix*.SDSNSAMP.
- The load module is to be put into the data set *prefix*.RUNLIB.LOAD(DSN8BC4).
- The plan name is DSN8BC81 for the bind and run.
- DCLGEN data from *prefix*.SRCLIB.DATA is required for the precompile.
- The DSNH CLIST is in your SYSPROC concatenation.

```
DSNH INPUT('
prefix
.SDSNSAMP(DSN8BC4)'') -
  COBLOAD('SYS1.LINKLIB(IKFCBL00)'') -
  LLIB('
prefix
.RUNLIB.LOAD'') -
  L2LIB('
prefix
.SDSNSAMP'') -
  LOAD('
prefix
```

```
.RUNLIB.LOAD'') -
  PLAN(DSN8BC81) -
  PLIB('
prefix
.SRCLIB.DATA'')
```

Example: Using DSNH to prepare and execute a C application

The following command precompiles, binds, compiles, link-edits, and runs the C program in data set *prefix*.SDSNSAMP(DSN8BD3).

- The C linkage editor include library is EDC.V1R1M1.SEDCBASE
- The C compiler load module is EDC.V1R1M1.SEDCCOMP(EDCCOMP)
- Printed output is sent to the following data sets:

Output	Data set
Precompiler listings	*user-id*.TEMP.PCLIST
Compiler listings	*user-id*.TEMP.LIST
Prelink-edit listings	*user-id*.TEMP.PRELLIST
Link-edit listings	*user-id*.TEMP.LINKLIST

- The following C DD names are allocated based on the PRINT keyword value:

DD name	Allocation
SYSCPRT[“1” on page 349]	Used in the compiler step
SYSUT10[“1” on page 349]	Used in the compiler step
SYSOUT	Used in the prelink-edit step

Note:

1. SYSUT10 and SYSCPRT are always allocated to the same data set or destination.

- SYSTERM is used in the compiler step. It is based on the TERM keyword.
- CEEDUMP is used in the run step. It is based on the RUNOUT keyword.
- The LOPTION keyword values of AMODE(31) and RMODE(ANY) are required when link editing the C sample program to ensure 31-bit addressability during execution.

```
ALLOC      DD(SYSPROC) DSN('
prefix
.SDSNCLST ') SHR
%DSNH BIND(YES) ACQUIRE(USE) ACTION(REPLACE)-
 EXPLAIN(NO) -
 CICSXLAT(NO) -
 COMPILE(YES) -
 CCLLIB('EDC.V1R1M1.SEDCBASE'')-
 CCLOAD('EDC.V1R1M1.SEDCCOMP(EDCCOMP)'')-
 DBRM('
prefix
.DBRMLIB.DATA(DSN8BD3)'')-
 DECIMAL(PERIOD) DELIMIT(DEFAULT) FLAG(I)-
 HOST(C) ISOLATION(RR)-
 INPUT('
prefix
.SDSNSAMP(DSN8BD3)'')-
 LINK(YES)-
 LLIB('
prefix
.RUNLIB.LOAD'')-
 L2LIB('
prefix
.SDSNLOAD'')-
 LOAD('
prefix
.RUNLIB.LOAD'')-
 LOPTION('AMODE(31) RMODE(ANY)')-
```

```
 MACRO(NO)-
 OUTNAME(TEMP)-
 PLAN(DSN8BD31) PRECOMP(YES)-
 PLIB('
prefix
.SDSNSAMP')-
 PRELINK(NO)-
 POPTION(NONE)-
 PRINT(TEMP) RCTERM(8)-
 RELEASE(COMMIT) RETAIN(YES)-
 RUN(NO) RUNIN(TERM)-
 RUNOUT(TERM) SOURCE(YES)-
 SYSTEM(DSN) SQLDELIM(DEFAULT)-
 VALIDATE(RUN)
```

Related reference

BIND PLAN subcommand (DSN)
The DSN subcommand BIND PLAN builds an application plan. All Db2 programs require an application plan to allocate Db2 resources and support SQL requests made at run time.

RUN subcommand (DSN)
The DSN subcommand RUN executes an application program, which can contain SQL statements.

BIND PACKAGE subcommand (DSN)
The DSN subcommand BIND PACKAGE builds an application package. Db2 records the description of the package in the catalog tables and saves the prepared package in the directory. BIND PACKAGE also deletes phased-out package copies.

DSN command (TSO)
The TSO command DSN starts a DSN session.

Related information

About Db2 and related commands
Use the Db2 for z/OS and related commands to execute database administrative functions.

Chapter 41. END subcommand (DSN)

The DSN subcommand END is used to end the DSN session and return to TSO.

Environment

This subcommand originates from a TSO input stream when DSN is running in either background or foreground mode.

Data sharing scope: Member

Authorization

None is required.

Syntax

```
►►─ END ─►◄
```

Usage note

Ending the DSN session in batch or foreground: In batch, if END is not found in the SYSIN stream, /* or // ends the DSN session. From the foreground, pressing the ATTENTION key twice ends the DSN session.

Examples

Example: Ending a DSN session

The following example shows how TSO responds when a user ends a DSN session.

```
TSO prompt :  READY
USER enters:  DSN SYS (SSTR)
DSN prompt :  DSN
USER enters:  RUN PROGRAM (MYPROG)
DSN prompt :  DSN
USER enters:  END
TSO prompt :  READY
```

© Copyright IBM Corp. 1983, 2024

Chapter 42. FREE STABILIZED DYNAMIC QUERY subcommand (DSN)

The DSN subcommand FREE STABILIZED DYNAMIC QUERY removes from certain catalog tables one or more stabilized dynamic queries. If any of the specified queries are in the dynamic statement cache, FREE STABILIZED DYNAMIC QUERY also purges the statements from the dynamic statement cache.

Environment

You can use the FREE STABILIZED DYNAMIC QUERY command from DB2I, or from a DSN session under TSO that runs in either the foreground or background. You can also use the SYSPROC.ADMIN_COMMAND_DSN stored procedure to submit this subcommand from a remote requester.

Data sharing scope: Group

Authorization

To execute this command, you must use a privilege set of the process that includes one of the following authorities:

- SQLADM authority
- System DBADM authority
- SYOPR authority
- SYSCTRL authority
- SYSADM authority

Syntax

```
>>- FREE STABILIZED DYNAMIC QUERY --- STBLGRP --- ( --- stabilization-group --- ) --->
                                                  |                          |
                                                  |--------- * ---------------|

>--- SDQSTMTID( statement-ID ) ---------------------------------------------------------->
                                |                                                        |
                                |-- PLANMGMTSCOPE --- ( --- ALL --- ) ---                |
                                                        |         |                      |
                                                        |-- INVALID --|                  |

>-------------------------------------------------------------------------------------><
                                |                                                        |
                                |-- INVALIDONLY --- ( --- NO --- ) ---                   |
                                                        |     |                          |
                                                        |-- YES --|                      |
```

Option descriptions

STBLGRP (*stabilization-group*)
Free all stabilized dynamic queries, or for a specific stabilization group.

stabilization-group
Free all stabilized queries for a stabilization group.

*****
Free all stabilized queries.

© Copyright IBM Corp. 1983, 2024

SDQSTMTID (*statement-identifier*)
Free an individual stabilized dynamic query with the specified big-integer constant *statement-identifier* value.

PLANMGMTSCOPE
Which copy of a stabilized dynamic query to free.

ALL
Free all the qualified copies of the stabilized dynamic query. This is the default.

INVALID
Free only the invalid copy (COPYID=4) of the stabilized dynamic query.

INVALIDONLY
Whether to free only copies of the stabilized dynamic query that are invalid.

NO
Free all the qualified copies of the stabilized dynamic query. This is the default.

YES
Free only the copies of the stabilized dynamic queries that are invalid (VALID='N').

Usage notes

If you use FREE DYNAMIC QUERY to free multiple copies, each successful free operation is committed before the next dynamic query is freed. If an error occurs during processing for a dynamic SQL statement, command processing ends for that stabilized dynamic query and continues processing the next stabilized dynamic query.

Examples

Free all stabilized dynamic queries for stabilization group APP01

```
FREE STABILIZED DYNAMIC QUERY STBLGRP(APP01)
```

Free stabilized dynamic query with statement identifier 1234

```
FREE STABILIZED DYNAMIC QUERY SDQSTMTID (1234)
```

Free the invalid copy (COPYID=4) of the stabilized dynamic query with statement identifier 1234

```
FREE STABILIZED DYNAMIC QUERY SDQSTMTID (1234) PLANMGMTSCOPE(INVALID)
```

Free all copies of the stabilized dynamic query with statement identifier 1234 that are invalid (VALID='N')

```
FREE STABILIZED DYNAMIC QUERY SDQSTMTID (1234) INVALIDONLY(YES)
```

Related tasks

Removing stabilized dynamic SQL statements from the Db2 catalog (Db2 Performance)

Stabilizing access paths for dynamic SQL statements (Db2 Performance)

Related reference

-START DYNQUERYCAPTURE command (Db2)
The Db2 command START DYNQUERYCAPTURE stabilizes access paths for qualified cached dynamic queries. This command can also optionally start monitoring of cached dynamic queries that qualify for a scope but have not met the specified execution threshold for stabilization.

-DISPLAY DYNQUERYCAPTURE command (Db2)
The Db2 command DISPLAY DYNQUERYCAPTURE displays all currently active dynamic query capture monitors.

SYSDYNQRY catalog table (Db2 SQL)

Chapter 43. FREE PACKAGE subcommand (DSN)

The DSN subcommand FREE PACKAGE can be used to delete a specific version of a package, all versions of a package, or whole collections of packages.

The FREE PACKAGE subcommand deletes corresponding table entries from the catalog tables. Authorization for a package name is removed only when no more versions of the package exist. After a version of a package has been freed, that package name is then available for use in a BIND PACKAGE subcommand to create a new package.

For active package copies, the FREE PACKAGE subcommand does not proceed until all currently running applications that use the package finish running. However, if you specify INACTIVE, PREVIOUS, or ORIGINAL for the PLANMGMTSCOPE option, the FREE PACKAGE subcommand can free the inactive package copies while the applications are running.

The FREE PACKAGE subcommand also deletes phased-out package copies.

Environment

You can enter this subcommand from DB2I, or from a DSN session under TSO that is running in either foreground or background.

Data sharing scope: Group

Authorization

To execute this subcommand, you must use a privilege set of the process that includes one of the following privileges or authorities:

- Ownership of the package
- BINDAGENT privilege granted by the owner of the package
- System DBADM authority
- SYSCTRL authority
- SYSADM authority
- PACKADM authority for the collection or for all collections

The BIND privilege on a package is not sufficient to allow a user to free a package.

© Copyright IBM Corp. 1983, 2024

Syntax

```
>>- FREE PACKAGE ->

                                   ,<-------------------------------------------------------------
>-- ( --+-------------------------+-------------+-------------+-----------+-------------+-------+-- ) ->
      +- location-name . -+-------+-+- collection-id -+-------+-+- package-id -+-------+-+- .( -+-------------+- ) -+-+
      |                   +- * ---+ +-------------- * -------+ +------------- * -------+ +-------+ +- version-id -+ | |
      |                                                                                             +------------- * -------+ |
      +------------------------------------------------------------------------------------------- * ------------------------+

>-+-------------------------------------------------------------------------------------------------->
  +- FLAG( -+-+- I -+-+- ) -+
            | +- W -+ |
            | +- E -+ |
            | +- C -+ |

>-+-------------------------------------------------------------------------------------------------+-><
  +- PLANMGMTSCOPE( -+-+- ALL -------+-+- ) -+-+-------------------------------+-+-+- NO -+-+- ) -+-+
                     | +- INACTIVE ---+ |     | +- INVALIDONLY -+ ( -+-------+ | | +- YES -+ |     |
                     | +- PREVIOUS ---+ |     |                  | +- YES -+ | |                |     |
                     | +- ORIGINAL ---+ |     |                  |           | |                |     |
                     | +- PHASEOUT ---+ |     |                  |           | |                |     |
```

Option descriptions

location-name
Specifies the location of the DBMS where the package is to be freed. The location name must be defined in the SYSIBM.LOCATIONS table. If this table does not exist or the DBMS is not found, you receive an error message. If the location name is specified, the name of the local Db2 subsystem must be defined.

The `default` is the local Db2 subsystem if you omit *location-name* .

***collection-id* or (*)**
Identifies the collection of the package to be freed. There is no default.

You can use an asterisk (*) to free all local packages with the specified *package-id* in all the collections that you are authorized to free. (You cannot use the * to free remote packages.)

collection-id can be an undelimited or a delimited identifier. The delimiter for *collection-id* is double quotation marks ("). If *collection-id* is delimited, Db2 does not convert the value to uppercase.

***package-id* or (*)**
Identifies the package to be freed. There is no default.

You can use an asterisk (*) to free all local packages in the *collection-id* that you are authorized to free. (You cannot use the * to free remote packages.)

package-id can be an undelimited or a delimited identifier. The delimiter for *package-id* is double quotation marks ("). If *package-id* is delimited, Db2 does not convert the value to uppercase.

***version-id* or (*)**
Identifies the version of the package to be freed.

You can use an asterisk (*) to free all local packages in the *collection-id* and *package-id* that you are authorized to free. (You cannot use the * to free remote packages.)

If you specify () for *version-id* , the empty string is used for the version ID.

If you omit the *version-id* , the default depends on how you specify *package-id* . If you use * for *package-id* , *version-id* defaults to *. If you provide an explicit value for *package-id* , *version-id* defaults to an empty string.

(*)
Frees all local Db2 packages that you are authorized to free.

Specifying (*) is equivalent to specifying the package name as (*.*.(*)) or (*.*).

FLAG
Indicates what messages you want the system to display. Use one of the following values to show messages of the corresponding types.

(I)
All: informational, warning, error, and completion messages.

(W)
Only warning, error, and completion messages.

(E)
Only error and completion messages.

(C)
Only completion messages.

PLANMGMTSCOPE
Allows you to manually free inactive copies of packages. Use one of the following options to help reclaim disk space:

ALL
Frees the entire package, including copies. This is the default. This option is not supported for trigger packages or SQL routines.

INACTIVE
Frees only previous, original, or eligible phased-out copies from the directory, catalog, and access path repository. FREE PACKAGE with PLANMGMTSCOPE(INACTIVE) succeeds even if the package has no inactive copies. Inactive package copies can be freed while applications that use the package are running. The phased-out copies can also be freed regardless of the INVALIDONLY option.

ORIGINAL
Frees original package copies from the directory, catalog, and access path repository. FREE PACKAGE with PLANMGMTSCOPE(ORIGINAL) succeeds even if the package has no original package copies. Original package copies can be freed while applications that use the package are running.

PREVIOUS
Frees previous package copies from the directory, catalog, and access path repository. FREE PACKAGE with PLANMGMTSCOPE(PREVIOUS) succeeds even if the package has no previous package copies. Previous package copies can be freed while applications that use the package are running.

PHASEOUT
Frees eligible phased-out copies from the directory, catalog, and access path repository. FREE PACKAGE with PLANMGMTSCOPE(PHASEOUT) succeeds even if the package has no phased-out copies. Phased-out package copies can be freed while applications that use the package are running. They can also be freed regardless of the INVALIDONLY option.

INVALIDONLY
Free invalid inactive package copies. Invalid package copies cannot be executed by Db2 until they are rebound. Specify INVALIDONLY to remove inactive invalid package copies to reclaim space. This action also enables the original package copy to be repopulated on the next REBIND with PLANMGMT(EXTENDED).

NO
Package copies are freed regardless of whether they are valid. NO is the default value.

YES
Only inactive invalid package copies are freed. An inactive package is invalid if the VALID column of SYSIBM.SYSPACKCOPY table row for the package contains a 'NO' value or the current release does not support packages that were bound under the release in which the package copy was bound.

Usage notes

Freeing multiple packages
If you free multiple packages with this subcommand, each successful free is committed before freeing the next package.

If an error occurs on a certain package specified explicitly in a list or implicitly with (*), FREE PACKAGE terminates for that package and continues with the next package to be processed.

Freeing trigger packages
You can free package copies for triggers and SQL routines. However, PLANMGMTSCOPE(ALL) is not supported for trigger packages and SQL routines. You must issue a DROP statement for the trigger or SQL routine to free the active package copies.

Trace information for data sharing members
When this command with group scope is issued in a Db2 data sharing member, it also runs on all other active members. IFICID 090 trace records for other group members can show that the same command was issued by the SYSOPR authorization ID from the 016.TLPKN5F correlation ID, in addition to the trace records from the member where the original command was issued. See Command scope in Db2 data sharing (Db2 Data Sharing Planning and Administration).

Examples

Free version *newver* of the package TEST.DSN8BC81 located at USIBMSTODB22. Generate only warning, error, and completion messages (not informational messages):

```
FREE PACKAGE (USIBMSTODB22.TEST.DSN8BC81.(
newver
)) FLAG(W)
```

Free all packages at the local server in the collection named TESTCOLLECTION.

```
FREE PACKAGE (TESTCOLLECTION.*)
```

Free all inactive package copies for version *newver* of the package &collid.&name located at &location:

```
FREE PACKAGE (&location.&collid.&name.(newver)) PLANMGMTSCOPE(INACTIVE)
```

Free all ORIGINAL package copies:

```
FREE PACKAGE (*.*.*.(*)) PLANMGMTSCOPE(ORIGINAL)
```

Free all inactive invalid package copies.

```
FREE PACKAGE (*.*.*.(*)) PLANMGMTSCOPE(INACTIVE) INVALIDONLY(YES)
```

Related concepts
Package copies for plan management (Db2 Performance)

Chapter 44. FREE PLAN subcommand (DSN)

The DSN subcommand FREE PLAN deletes application plans from Db2.

The FREE PLAN subcommand deletes corresponding table entries from the SYSIBM.SYSPLAN catalog tables. All authorization against an application plan name is dropped. The application plan name is then available for use in a BIND PLAN subcommand to create a new package.

The FREE PLAN subcommand does not proceed until all currently executing applications using that plan finish executing.

Environment

You can enter this subcommand from DB2I, or from a DSN session under TSO that is running in either foreground or background.

Data sharing scope: Group

Authorization

To execute this command, you must use a privilege set of the process that includes one of the following privileges or authorities:

- Ownership of the plan
- BIND privilege on the plan
- BINDAGENT privilege granted by the plan owner
- System DBADM authority
- SYSCTRL authority
- SYSADM authority

Syntax

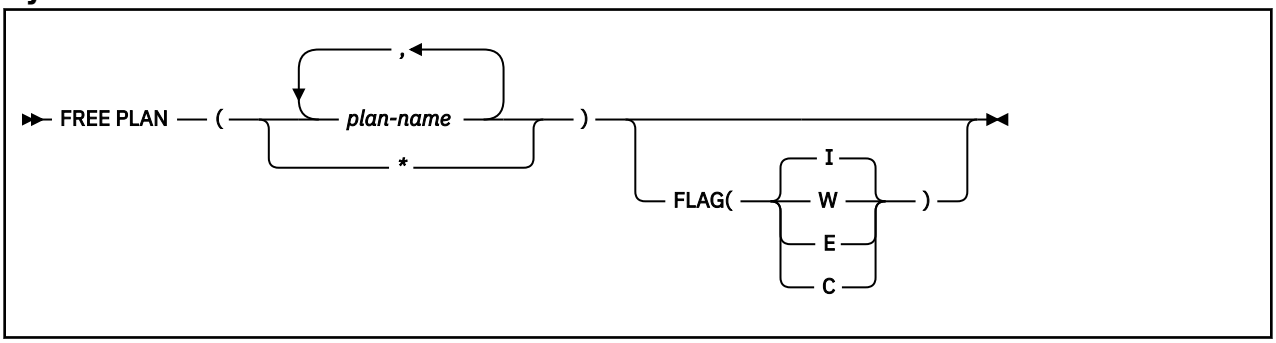

Option descriptions

(*plan-name* , ...)
Lists the names of one or more plans you want to free.

(*)
Frees *all* application plans over which you have BIND authority. Be careful when using this form of the command.

FLAG
Indicates what messages you want the system to display. Use one of the values listed to show messages of the corresponding types.

(I)
All: informational, warning, error, and completion messages.

© Copyright IBM Corp. 1983, 2024

(W)
Only warning, error, and completion messages.

(E)
Only error and completion messages.

(C)
Only completion messages.

Usage notes

Freeing multiple plans

If you free multiple plans with this subcommand, each successful free is committed before freeing the next plan.

If an error occurs on a certain plan specified explicitly in a list or implicitly with (*), FREE PLAN terminates for that plan and continues with the next plan to be processed.

Trace information for data sharing members

When this command with group scope is issued in a Db2 data sharing member, it also runs on all other active members. IFICID 090 trace records for other group members can show that the same command was issued by the SYSOPR authorization ID from the 016.TLPKN5F correlation ID, in addition to the trace records from the member where the original command was issued. See Command scope in Db2 data sharing (Db2 Data Sharing Planning and Administration).

Example

Free plan DSN8BC81 from Db2. Generate only warning, error, and completion messages (not informational messages).

```
FREE PLAN (DSN8BC81) FLAG (W)
```

Chapter 45. FREE QUERY subcommand (DSN)

The DSN subcommand FREE QUERY removes from certain catalog tables for one or more queries. If any of the specified queries are in the dynamic statement cache, FREE QUERY purges them from the dynamic statement cache.

Environment

You can use FREE QUERY from DB2I, or from a DSN session under TSO that runs in either the foreground or background. You can also use the SYSPROC.ADMIN_COMMAND_DSN stored procedure to submit this subcommand from a remote requester.

Data sharing scope: Group

Authorization

To execute this command, you must use a privilege set of the process that includes one of the following authorities:

- SQLADM authority
- System DBADM authority
- SYSOPR authority
- SYSCTRL authority
- SYSADM authority

Syntax

```
>>- FREE QUERY --- filter-block --- package-block -><
```

filter-block:

```
>>-+-------------------------------------------+-><
   |                 FILTER(' filter-name ')   |
   |  +-------------------------------------+  |
   |  |  PACKAGE( package-name )            |  |
   |  +-------------------------------------+  |
   |  |  QUERYID( number)                   |  |
   |  +-------------------------------------+  |
   |  |  QUERYID(ALL)                       |  |
   |  +-------------------------------------+  |
```

package-block:

```
>>-+-------------------+-.-+-------------+-.-+-------------+-.-( ->
   |  location-name    |   |  collection-id |   |  package-id |
   |                   |   |  +---------+  |   |  +---------+
   |                   |   |  |  *      |  |   |  |  *      |
   |                   |   |  +---------+  |   |  +---------+

 >-+-+-----------------+-+-+-><
    |  +-------------+  |
    |  |  version-id |  |
    |  +-------------+  |
    |  |  *          |  |
    |  +-------------+  |
```

Option descriptions

© Copyright IBM Corp. 1983, 2024

FILTER('*filter-name*')
Specifies the queries that are to be removed from the access path repository. *filter-name* is a value in the USERFILTER column of the SYSIBM.SYSQUERY catalog table. During FREE QUERY processing, all the rows in the SYSIBM.SYSQUERY table that have the USERFILTER value *filter-name* are removed. Deletions from the SYSIBM.SYSQUERY table are cascaded to the SYSIBM.SYSQUERYPLAN table or the SYSIBM.SYSQUERYOPTS table.

PACKAGE(*package-name*)
The name of the package from which the queries are to be freed.

QUERYID(*number*)
Frees an entry in the SYSIBM.SYSQUERY table that has the same QUERYID value, and the corresponding entries in the SYSIBM.SYSQUERYPLAN table or the SYSIBM.SYSQUERYOPTS table.

QUERYID(ALL)
Frees all the entries from the SYSIBM.SYSQUERY table and the corresponding entries from the SYSIBM.SYSQUERYPLAN table or the SYSIBM.SYSQUERYOPTS table.

location-name
Specifies the location of the data server where the query is to be freed. Only the location name of the local Db2 subsystem can be specified. If the location name is specified, the name of the local Db2 subsystem must be defined in the SYSIBM.LOCATIONS table. If this table does not exist or the data server is not found, an error message is issued.

The default value is the local Db2 subsystem.

***collection-id* or (*)**
Identifies the collection that is associated with the query to be freed. There is no default.

You can use an asterisk (*) to free all packages with the specified *package-id* in all the collections that you are authorized to free.

***package-id* or (*)**
Identifies the package that is associated with the query to be freed. There is no default.

You can use an asterisk (*) to free all packages in the *collection-id* that you are authorized to free.

***version-id* or (*)**
Identifies the version of the package for which the associated query is to be freed.

You can use an asterisk (*) to free all local packages in the *collection-id* and *package-id* that you are authorized to free. You cannot use the * to free remote packages.

If you specify () for *version-id* , the empty string is used for the version ID.

If you omit *version-id* , the default depends on how you specify *package-id* . If you use * for *package-id* , *version-id* defaults to *. If you provide an explicit value for *package-id* , *version-id* defaults to an empty string.

(*)
Frees all local Db2 packages that you are authorized to free.

Specifying (*) is equivalent to specifying the package name as (*.*.(*)) or (*.*).

Usage notes

Freeing multiple queries
If you use FREE QUERY to free multiple queries, each successful free operation is committed before the next query is freed. If an error occurs on a query, FREE QUERY terminates for that package and continues processing the next query.

Trace information for data sharing members
When this command with group scope is issued in a Db2 data sharing member, it also runs on all other active members. IFICID 090 trace records for other group members can show that the same command was issued by the SYSOPR authorization ID from the 016.TLPKN5F correlation ID,

in addition to the trace records from the member where the original command was issued. See Command scope in Db2 data sharing (Db2 Data Sharing Planning and Administration).

Examples

Example 1: Free all access paths for all queries:

```
FREE QUERY QUERYID(ALL)
```

Example 2: Free queries for which the USERFILTER column of the SYSIBM.SYSQUERY catalog table contains SALESAPP:

```
FREE QUERY
      FILTER('SALESAPP')
```

Example 3: Free all queries in package SALESPACK:

```
FREE QUERY
      PACKAGE(SALESCOLL.SALESPACK)
```

Related tasks

Influencing access path selection (Db2 Performance)

Freeing statement-level access paths (Db2 Performance)

Related reference

BIND QUERY subcommand (DSN)

The DSN subcommand BIND QUERY reads the statement text, default schema, and a set of bind options from every row of DSN_USERQUERY_TABLE, and information from correlated EXPLAIN table rows. When LOOKUP(NO) is in effect, Db2 inserts the pertinent data into certain catalog tables.

SYSQUERY catalog table (Db2 SQL)

SYSQUERYOPTS catalog table (Db2 SQL)

SYSQUERYPLAN catalog table (Db2 SQL)

SYSQUERYPREDICATE catalog table (Db2 SQL)

SYSQUERYSEL catalog table (Db2 SQL)

Chapter 46. FREE SERVICE command (DSN)

The FREE SERVICE (DSN) subcommand deletes an application package that represents a Db2 REST service. The command also removes the corresponding entry from the catalog tables.

The FREE SERVICE subcommand does not proceed until all currently running applications using the package finish running.

Environment

You can issue FREE SERVICE from a DSN session under TSO that runs in the foreground or background.

Data sharing scope: Group

Authorization

To execute this subcommand, you must use a privilege set of the process that includes one of the following privileges or authorities:

- Ownership of the package
- BINDAGENT privilege granted by the package owner
- System DBADM authority
- SYSCTRL authority
- SYSADM authority
- PACKADM authority on the collection or on all collections.

The BIND privilege on a package alone is not sufficient authorization to free a service package.

Syntax

```
>>- FREE SERVICE ->

>- ( --+-------------------+-- collection-id -- . -- service-name --+-------------------+-- ) -><
      +- location-name . -+                                         +- .( -- version-id -- ) -+
```

Option descriptions

location-name
Specifies the location of the DBMS where the service is to be freed. The location name must be defined in the SYSIBM.LOCATIONS table. If this table does not exist or the DBMS is not found, you receive an error message. If the location name is specified, the name of the local Db2 subsystem must be defined. If you omit *location-name*, the default is the local Db2 subsystem.

collection-id
Identifies the collection of the REST service. There is no default. The *collection-id* can be an undelimited or a delimited identifier. The delimiter for *collection-id* is double quotation marks (").
If *collection-id* is delimited, Db2 does not convert the value to uppercase.

service-name
Identifies the REST service. There is no default. The *service-name* can be an undelimited or a delimited identifier. The delimiter for *service-name* is double quotation marks ("). If *service-name* is delimited, Db2 does not convert the value to uppercase.

version-id

Identifies the version of the REST service.

© Copyright IBM Corp. 1983, 2024

If you specify () for version-id, or if you omit the version-id , the default version of the REST service is deleted.

Usage notes

Trace information for data sharing members

When this command with group scope is issued in a Db2 data sharing member, it also runs on all other active members. IFICID 090 trace records for other group members can show that the same command was issued by the SYSOPR authorization ID from the 016.TLPKN5F correlation ID, in addition to the trace records from the member where the original command was issued. See Command scope in Db2 data sharing (Db2 Data Sharing Planning and Administration).

Related tasks

Dropping a Db2 REST service (Db2 REST services)

Related reference

BIND SERVICE subcommand (DSN)

The BIND SERVICE (DSN) subcommand builds an application package that represents a Db2 REST service. Db2 records the description of the service in the catalog tables and saves the prepared package in the directory.

BIND and REBIND options for packages, plans, and services

There are several options you can use for binding or rebinding packages, plans, and services. Some of the options are common for both BIND and REBIND operations.

Chapter 47. MODIFY *admtproc*,APPL=SHUTDOWN command

The MODIFY *admtproc*, APPL=SHUTDOWN command stops the administrative task scheduler from accepting requests and starting new task executions. It also shuts down the administrative task scheduler.

When the SHUTDOWN option is specified, the administrative task scheduler waits until the execution of all currently running tasks completes. When all running tasks are complete, the administrative task scheduler terminates.

Environment

This command can be issued only from a z/OS console.

Data sharing scope: Member

Authorization

The command requires an appropriate level of operating system authority.

Syntax

```
►► MODIFY ── admtproc,APPL= ── SHUTDOWN ─►◄
```

You cannot include spaces when you specify options.

Option descriptions

admtproc
Specifies the procedure name of the scheduled task of the administrative task scheduler that you want to modify.

Examples

Example 1: This command modifies the *admtproc* scheduler in order to shut it down.

Enter the following command on the system console:

```
modify admtproc,appl=SHUTDOWN
```

© Copyright IBM Corp. 1983, 2024

Chapter 48. MODIFY *admtproc*,APPL=TRACE command

The MODIFY *admtproc*, APPL=TRACE command starts or stops traces in the administrative task scheduler.

It is not required to stop the scheduler to access the trace. If you want to turn trace on or off when the administrative task scheduler starts, you can take one of the following actions:

- Modify the procedure parameter TRACE in the JCL job that starts the administrative task scheduler. This job has the name *admtproc* and was copied into one of the PROCLIB library during the installation. Specify TRACE=ON or TRACE=OFF.
- Dynamically overwrite the trace parameter on the operator's console when starting the administrative task scheduler. This option does not exist when Db2 starts the administrative task scheduler automatically, and can only be done manually.

Environment

This command can be issued only from a z/OS console.

Data sharing scope: Member

Authorization

The command requires an appropriate level of operating system authority.

Syntax

```
►► MODIFY ── admtproc,APPL= ── TRACE= ┬─ ON ─┬─►◄
                                      └─ OFF ─┘
```

You cannot include spaces when you specify options.

Option descriptions

admtproc
Specifies the procedure name of the administrative task scheduler task that you want to modify.

ON
Turns the trace on.

OFF
Turns the trace off.

Examples

Example 1: This command modifies the *admtproc* scheduler and turns the trace on.

Enter the following command on the system console:

```
modify admtproc,appl=trace=on
```

Response from z/OS console:

```
STC00072 DSNA672I MODIFY COMMAND FOR ADMIN SCHEDULER V91AADMT
NORMAL COMPLETION
```

© Copyright IBM Corp. 1983, 2024

Example 2: This command modifies the *admtproc* scheduler and turns the trace off.

Enter the following command on the system console:

```
modify admtproc,appl=trace=off
```

Response from z/OS console:

```
STC00072 DSNA672I MODIFY COMMAND FOR ADMIN SCHEDULER V91AADMT
NORMAL COMPLETION
```

Chapter 49. -MODIFY DDF command (Db2)

The MODIFY DDF command modifies the status and configuration of the Db2 distributed data facility (DDF) and statistics for connections or threads that are controlled by DDF.

Authorization

To execute this command, you must use a privilege set of the process that includes one of the following privileges or authorities:

- SYSOPR authority
- SYSCTRL authority
- SYSADM authority

Db2 commands that are issued from a logged-on z/OS console or TSO SDSF can be checked by Db2 authorization using primary and secondary authorization IDs. A logged-on z/OS user ID must be defined in RACF or a similar security server.

Syntax

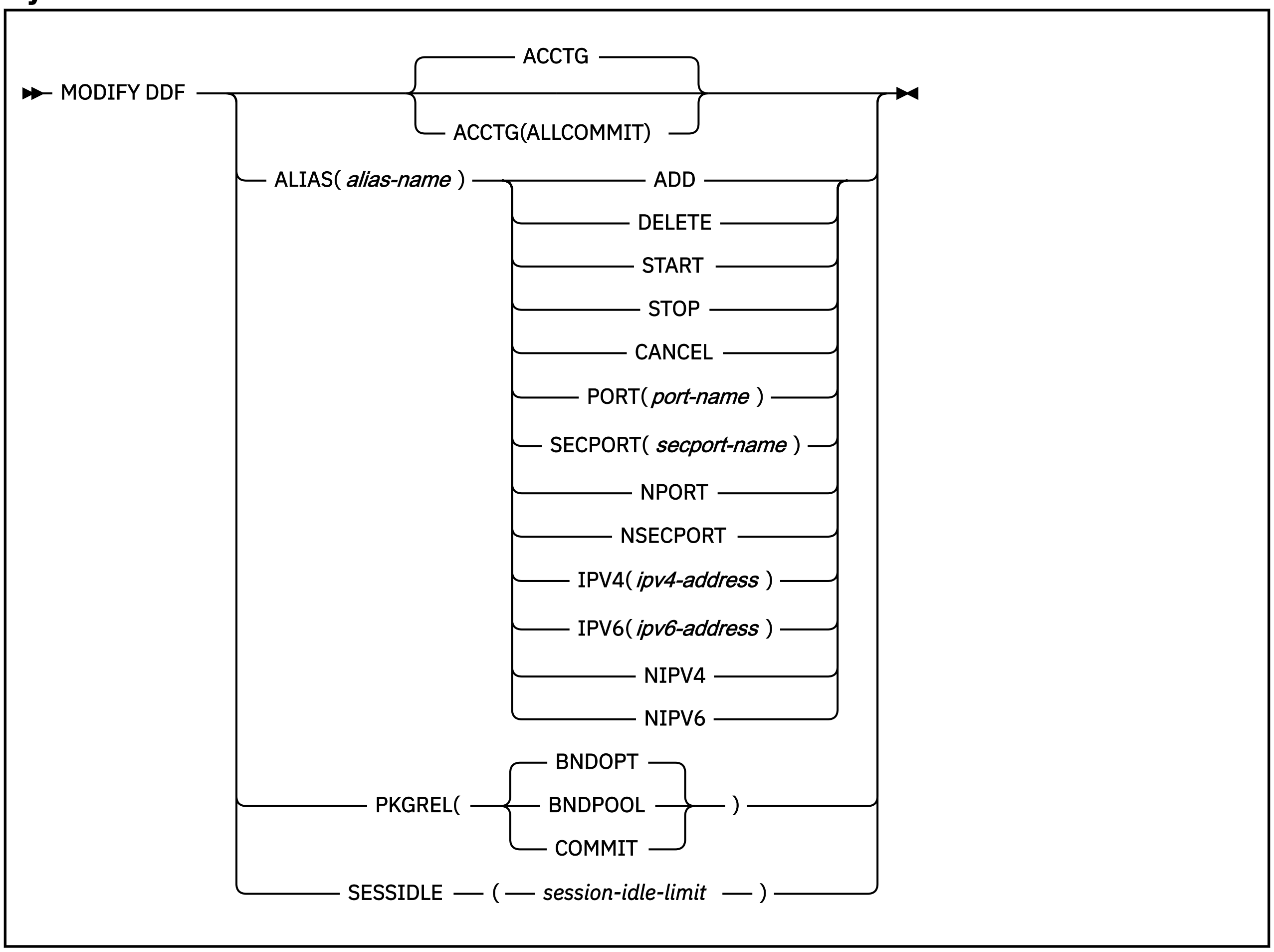

Option descriptions

ACCTG
Specifies whether Db2 generates an accounting trace record occurrence for every transaction used by a distributed client application.

For existing distributed threads, the specified ACCTG option takes effect only after the thread generates an accounting trace record at a commit or rollback with no open resources. Until then, the previously saved ACCTG option for the thread continues to control when it generates accounting trace records.

(no option value)
Specifies the default behavior.

When this option is set back to its default setting, or if the setting was never changed, Db2 generates an accounting trace record when no open resource exists past a commit or rollback. If any of the following resources remain open and pending, Db2 does not generate an accounting trace record:

- Open WITH HOLD cursors
- Declared global temporary tables that are not dropped
- Unreleased LOB locators
- A commit processed by a stored procedure when running with 2-phase commit rules
- Allocated RELEASE DEALLOCATE packages (due to the -MODIFY DDF PKGREL(BNDOPT) option)
- Allocated KEEPDYNAMIC YES packages

However, if only one the last two preceding resources types, but not both, are open after a commit or rollback, Db2 generates an accounting trace record occurrence after a commit or rollback.

ALLCOMMIT
When this option is set, Db2 generates an accounting trace record occurrence after any commit or rollback. However, Db2 still maintains the WLM enclave that was created by Db2, prior to the initial requested transaction which left open resources. Also, Db2 maintains information so that when the DBAT is terminated after completing the work requests from its client connection, it deletes the enclave and informs WLM of the transactions that were completed.

To use the ACCTG(ALLCOMMIT) option, you must also set the CMTSTAT subsystem parameter value to INACTIVE. Otherwise, Db2 returns the following message to indicate that the default behavior is still being used.

```
DSNL302I ACCTG IS SET TO COMMIT_WITH_NO_OPEN_RESOURCES
```

ALIAS
Specifies the creation, changes to, or deletion of a specified location alias.

alias-name
Specifies the name of an alias for a DDF location. An alias is an alternative for the location name that can be used for connection processing. The alias name must meet all of the following requirements:

- Contains no more than 16 characters.
- Contains only letters (excluding alphabetic extenders), numbers, or the underscore character.

ADD
Creates an alias with the specified name.

DELETE
Deletes the specified alias.

START
Db2 starts accepting connection requests to the specified alias if DDF is started. If DDF is not started, the alias is marked eligible for starting, and Db2 automatically starts accepting connection requests to the alias when DDF is started.

If the subsystem is part of a data sharing group, Db2 registers the alias with WLM and Db2 participates in sysplex workload balancing for connections to the alias.

STOP
Db2 stops accepting new connection requests to the specified alias. Existing database access threads that process connections to the alias remain unaffected. Inactive connections related to the alias are closed.

A stopped alias is marked ineligible for starting and does not start automatically when DDF starts. If the subsystem is part of a data sharing group, Db2 unregisters the alias with WLM and Db2 stops participating in sysplex workload balancing for connections to the alias.

CANCEL
Db2 stops accepting new connection requests to the specified alias. All database access threads that process connections to the alias are canceled and inactive connections that are related to the alias are closed.

A canceled alias is marked ineligible for starting and does not start automatically when DDF starts. If the subsystem is part of a data sharing group, Db2 unregisters the alias with WLM and Db2 stops participating in sysplex workload balancing for connections to the alias.

PORT(*port-name*)
Adds or replaces an existing port that can be used by DDF to accept distributed requests for the specified alias. The value that is specified for *port-name* value must be a decimal number in the range 1–65535, including 65535, and must be different than the values for the ports of other aliases. Specify a PORT value for an alias when you want to identify a subset of data sharing members to which a distributed request can go.

SECPORT(*secport-name*)
Adds or replaces an existing secure port that can be used by DDF to accept secure-distributed requests by using SSL for the specified alias. The value that is specified for *secport-name* must be a decimal number in the range 1–65535, including 65535, and must be different than the values for ports of other aliases. Specify a SECPORT value for an alias when you want to identify a subset of data sharing members to which a secure-distributed request can go.

NPORT
Deletes the alias port, if one exists.

NSECPORT
Deletes the alias secure port, if one exists.

IPV4(*IPv4-address*)
Adds or replaces an existing member-specific IPv4 address. Clients use that address when they use one of the following capabilities for a connection to a dynamic location alias:

- Sysplex workload balancing
- XA protocols for coordinating distributed transactions

This address must be specified in the dotted decimal form.

IPV6(*IPv6-address*)
Adds or replaces an existing member-specific IPv6 address. Clients use that address when they use one of the following capabilities for a connection to a dynamic location alias:

- Sysplex workload balancing
- XA protocols for coordinating distributed transactions

This address must be specified in the colon-hexadecimal form.

NIPV4
Deletes the alias IPv4 address, if one exists.

NIPV6
Deletes the alias IPv6 address, if one exists.

PKGREL
Specifies whether Db2 honors the bind options of packages that are used for remote client processing. Db2 uses the behavior of the COMMIT option before the first MODIFY DDF command is issued with the PKGREL option.

If the CMTSTAT subsystem parameter is set to ACTIVE, the MODIFY DDF command with the PKGREL keyword has no effect, and Db2 always uses the behavior of the COMMIT option.

BNDOPT
The rules of the RELEASE bind option that was specified when the package was bound are applied to any package that is used for remote client processing. The high-performance DBAT that is used by a terminating client connection is deallocated.

BINDOPT is the default PKGREL option if the CMTSTAT subsystem parameter is set to INACTIVE.

BNDPOOL
The rules of the RELEASE bind option that was specified when the package was bound are applied to any package that is used for remote client processing. The high-performance DBAT that is used by a terminating client connection is pooled.

COMMIT
The rules of the RELEASE(COMMIT) bind option are applied to any package that is used for remote client processing.

If the CMTSTAT subsystem parameter is set to ACTIVE, Db2 always uses the behavior of this option.

SESSIDLE(*session-idle-limit*)
Specifies that number of minutes that applications can remain inactive before the associated session data token becomes invalid because of timeout.

session-idle-limit can be any integer 0–999999. When no value was specified, the default value is 1440.

Usage notes

When to use PKGREL options and high-performance DBATs

During normal production operating hours, you can specify that DDF uses the PKGREL(BNDOPT) or PKGREL(BNDPOOL) options to specify that Db2 uses high-performance DBATs to service remote connections. A *high-performance DBAT* is a database access thread that stays associated with a remote connection at transaction boundaries, rather than being pooled. With high-performance DBATs, the amount of allocation and deallocation processing is reduced because the copy of the package remains allocated until the DBAT terminates. For more information, see Enabling high-performance DBATs (Db2 Performance).

For environments where client configurations control the use of packages that are bound with the RELEASE(DEALLOCATE) bind option, BNDOPT might be the preferred value of the PKGREL option. For environments where any client can use packages that are bound with the RELEASE(DEALLOCATE) bind option, BNDPOOL might be the preferred value of the PKGREL option. Either option value offers improved performance by reducing the CPU costs for allocation and deallocation of packages.

However, packages that run under the rules of the RELEASE(DEALLOCATE) bind option are likely to remain allocated and prevent maintenance activities such as objects modifications and bind operations. So, you can specify the PKGREL(COMMIT) option during routine and emergency maintenance periods. For more information, see Controlling deallocation for high-performance DBATs (Db2 Performance).

Delayed effects of PKGREL(COMMIT)

When you issue the MODIFY DDF command and specify the PKGREL(COMMIT) option, the effects are not immediate. After the command is issued, any database access thread that was running RELEASE(DEALLOCATE) packages is terminated when the connection becomes inactive. At the next unit-of-work from the client, a new database access thread is created in RELEASE(COMMIT) mode. Any DBAT that remains active waiting for a new unit-of-work request from its client because of the RELEASE(DEALLOCATE) rules is terminated by the DDF service task that runs every 2 minutes. So, within approximately 2 minutes, all database access threads run under the rules of the RELEASE(COMMIT) bind option.

Changes to alias attributes

The attributes of an existing alias can be modified only when the alias is stopped. The modified alias attributes take effect when the alias is started. By default, aliases that are created by the DSNJU003 utility are started and aliases that are created by the MODIFY DDF command are stopped. DSNJU004 does not print any information for aliases that are created by the MODIFY DDF command. You can use the output of the DISPLAY DDF command to find the status of aliases created by the MODIFY DDF command.

How Db2 uses the IPV4 and IPV6 values

Db2 does not activate the IP addresses that you specify with the IPV4 or IPV6 parameters. Clients use those addresses for routing purposes only. Db2 does not require that the addresses are dynamic virtual IP addresses (DVIPAs). The IP addresses are used to reach the DVIPA network that serves the Db2 data sharing group. You can specify the IP addresses in the MODIFY DDF command only after the DSNJU003 is run with the IPV4 or IVP6 parameter to specify a member-specific location address. The specified IP addresses are returned in the WLM weighted server list when clients connect to a dynamic location alias, based on the following conditions:

- If the client connects uses an IPv6 address, the server list contains the alias IP addresses that were specified with the IPV4 and IPV6 parameters of the MODIFY DDF command. If an IPv4 address was not specified in the MODIFY DDF command, the location IP address that was specified by the IPV4 keyword of the DSNJU003 utility is returned instead. Similarly, if an IPv6 address is not specified in the MODIFY DDF command, the location IP address that was specified by the IPV6 keyword of the DSNJU003 utility is returned instead.
- If the client connects uses an IPv4 address, the server list contains the alias IP address that was specified with the IPV4 parameter of the MODIFY DDF command. If an IPv4 address was not specified in the MODIFY DDF command, the location IP address that was specified by the IPV4 keyword of the DSNJU003 utility is returned instead.

Related concepts

Member-specific location aliases (Db2 Data Sharing Planning and Administration)

Related tasks

Defining dynamic location aliases (Db2 Data Sharing Planning and Administration)

Managing dynamic location aliases (Db2 Data Sharing Planning and Administration)

Related reference

DDF THREADS field (CMTSTAT subsystem parameter) (Db2 Installation and Migration)

Chapter 50. MODIFY STOP *irlmproc* (z/OS IRLM),ABEND command (z/OS IRLM)

The MODIFY *irlmproc*, ABEND command terminates IRLM abnormally. IRLM processes this command even if a Db2 subsystem is identified to it.

Abbreviation: F

Environment

This command can be issued only from a z/OS console.

Data sharing scope: Member

Authorization

The command requires an appropriate level of operating system authority.

Syntax

```
►► MODIFY ── irlmproc,ABEND, ┬─ DUMP ───┬ ►◄
                             └─ NODUMP ─┘
```

Option descriptions

Parameters must be separated by commas with no spaces.

irlmproc
Specifies the procedure name of the IRLM that is to be terminated.

DUMP
Specifies that IRLM is to terminate abnormally with a U2020 abend. A system dump is taken to the SYS1.DUMPxx data set. IRLM does not deregister from ARM.

NODUMP
Specifies that IRLM is to FORCE the DBMS off and terminate normally without generating a dump. All DBMS work is quiesced and IRLM stops itself. NODUMP **requires** that IRLM be functioning normally. **Do not** use this option if IRLM appears to be hung.

A second invocation causes IRLM to terminate abnormally with a U2020 abend; no dump is taken.

Usage notes

Terminating IRLM: Use the STOP irlmproc (z/OS IRLM) command to terminate IRLM.

Deregistering IRLM: You can use the NODUMP option to deregister IRLM before stopping it. This action prevents the automatic restart manager from immediately trying to restart IRLM.

Example

Enter the following command on the system console:

```
F KRLM001,ABEND
```

© Copyright IBM Corp. 1983, 2024

Response on the z/OS system console is as follows:

```
 DXR124E IR21001 ABENDED VIA MODIFY COMMAND
*IEA911E COMPLETE DUMP ON SYS1.DUMP00
  FOR ASID(0004)
   ERROR ID = SEQ00001 CPU00 ASID0004 TIME08.34.59.9
 DXR121I IR21001 END-OF-TASK CLEANUP SUCCESSFUL
 IEF450I IR21001 IR21001 - ABEND=S000 U2020 REASON=00000000
```

The default is dump. If you do not want a dump, you must specify the following command:

```
F KRLM001,ABEND,NODUMP
```

Chapter 51. MODIFY *irlmproc*,DIAG command (z/OS IRLM)

The MODIFY *irlmproc*, DIAG command initiates diagnostic dumps for IRLM subsystems.)

If IRLM detects a delay in the child-lock propagation process, it retries the XES calls in order to recover. Use the MODIFY *irlmproc* , DIAG command under the direction of IBM Software Support if this situation occurs.

Abbreviation: F

Environment

This command can be issued only from a z/OS console.

Data sharing scope: Group

Authorization

The command requires an appropriate level of operating system authority.

Syntax

```
►► MODIFY ── irlmproc,DIAG ──┬─ ,DELAY ─┬──►◄
                             ├─ ,PLOCK ─┤
                             ├─ ,ALL ───┤
                             ├─ ,NONE ──┤
                             └─ ,HANG ──┘
```

Option descriptions

Parameters must be separated by commas, with no spaces.

irlmproc
Specifies the procedure name of the IRLM instance that is to be diagnosed.

DIAG
Specifies that this is a diagnostic dump.

DELAY
Directs IRLM to generate a dump the first time it detects that child lock propagation to the coupling facility is taking longer than 45 seconds. The dump is placed in the SYS1.DUMP*xx* data set.

PLOCK
Directs IRLM to generate a dump the first time it detects that P-lock negotiation is taking longer than four minutes. Dumps of the IRLM and Db2 address spaces are placed in the SYS1.DUMPxx data set.

ALL
Directs IRLM to generate diagnostic dumps for IRLM or DBMS subsystems in a data sharing group for the following unusual conditions:

- P-lock negotiation takes longer than four minutes.
- Child-lock propagation takes longer than 72 seconds. IRLM retries the child lock propagation after 78 seconds if this condition still exists.

© Copyright IBM Corp. 1983, 2024

- If IRLM detects a delay in the child-lock propagation process, it retries the XES calls in order to recover.

NONE
Disables generating all diagnostic dumps.

HANG
Collects IRLM SYSPLEX dumps when DEADLOCK or TIMEOUT issues are suspected. The dumps are taken during DEADLOCK processing. The DEADLOCK processing is stopped, and the dynamic deadlock storage is collected. z/OS DUMP services then schedules an SRB to restart DEADLOCK processing. Message DXR183I is issued by each IRLM as DEADLOCK processing is restarted. If message DXR183I is not issued by an IRLM, that IRLM must be terminated and restarted. You must start the IRLM XCF CTRACE internally and wait 30 seconds before issuing this command.

Usage notes

When to use the MODIFY irlmproc,DIAG command

The MODIFY irlmproc,DIAG command should be used only under the direction of IBM Support.

This command is active for only one incident per IRLM, that is, after an IRLM instance detects the delay and initiates the dump. You can initiate one dump per IRLM in the group. You must enter the command again to initiate another dump. Be aware that when you enter this command for one member of the data sharing group, **any** member that detects the delay initiates a dump.

The *irlmproc* identifies the procedure name for IRLM. If multiple IRLM instances exist in the same system, each procedure must have a unique name.

Trace information for data sharing members
When this command with group scope is issued in a Db2 data sharing member, it also runs on all other active members. IFICID 090 trace records for other group members can show that the same command was issued by the SYSOPR authorization ID from the 016.TLPKN5F correlation ID, in addition to the trace records from the member where the original command was issued. See Command scope in Db2 data sharing (Db2 Data Sharing Planning and Administration).

Example

Issue this command to initiate one diagnostic dump for the IR21PROC IRLM subsystem. The dump occurs once, after the propagation of child locks takes longer than 45 seconds.

```
MODIFY IR21PROC,DIAG,DELAY
```

Chapter 52. MODIFY *irlmproc*,PURGE command (z/OS IRLM)

The MODIFY *irlmproc*,PURGE command releases IRLM locks retained due to a Db2, IRLM, or system failure.

The command causes all retained locks for the specified Db2 to be deleted from the system, thereby making them available for update. Because retained locks protect updated resources, it should be used only after understanding what the resources are and the consequence to data integrity if they are deleted.

Abbreviation: F

Environment

This command can be issued only from a z/OS console.

Data sharing scope: Member

Authorization

The command requires an appropriate level of operating system authority.

Syntax

```
►► MODIFY ── irlmproc,PURGE, db2name ►◄
```

Option descriptions

Use commas with no spaces to separate parameters.

irlmproc
Specifies the active IRLM that is to process the command.

db2name
Specifies the inactive Db2 name, as displayed by the STATUS command.

Usage notes

Db2 subsystem inactive: The Db2 subsystem that owns the retained locks must be inactive or else this command fails.

The irlmproc must be the procedure name of an active IRLM that is connected to the same sysplex group as the failed member. Issuing a purge request using an inactive IRLM returns error IEE341I.

Example

Example: For an active Db2 subsystem named db2b with irlmproc name db2birlm, issue the following command to display all active and inactive subsystems in a data sharing sysplex:

```
F db2birlm,STATUS,ALLD
```

If the subsystem db2a is inactive, enter the following command:

```
F db2birlm,PURGE,db2a
```

© Copyright IBM Corp. 1983, 2024

Response on the MVS system console for completed purge request:

```
DXR109I IR2B002 PURGE COMMAND COMPLETED FOR DB2A
```

Explanation: In a sysplex environment, if the Db2 database is inactive and the database IRLM has stopped or is disconnected, the operator of the z/OS system uses one of the other active IRLM members to query retained locks and issue the PURGE request.

Chapter 53. MODIFY *irlmproc*,SET command (z/OS IRLM)

The MODIFY *irlmproc*,SET command dynamically sets various IRLM operational parameters

The MODIFY *irlmproc*,SET command performs the following tasks:

- Dynamically sets the maximum private storage allowed from IRLM.
- Dynamically sets the number of trace buffers allowed for IRLM.
- Dynamically sets the number of LOCK LTE entries to be specified on the next connect to the XCF LOCK structure.
- Dynamically sets the timeout value for a specified subsystem.
- Dynamically sets the local deadlock frequency.

Abbreviation: F

Environment

This command can be issued only from a z/OS console.

Data sharing scope: Group or Member, depending on whether you specify the DEADLOCK or LTE options.

Authorization

The command requires an appropriate level of operating system authority.

Syntax

```
►► MODIFY ── irlmproc,SET ──┬──────────────────────────────────────┬──►◄
                            │          ,DEADLOCK= nnnn             │
                            │          ,LTE= nnnn                  │
                            │          ,MLT= nnnnnU                │
                            │          ,PVT= nnnn                  │
                            │ ,TIMEOUT= nnnn,subsystem-name        │
                            │                  ┌─ 10 ─┐            │
                            └──────── ,TRACE= ─┴─ nnn ─┴────────────┘
```

Option description

Use commas with no spaces to separate parameters.

irlmproc
Specifies the IRLM that is to process the command.

SET
Sets the following values for this IRLM:

DEADLOCK= *nnnn*
Specifies the number, in milliseconds, indicating how often the local deadlock processing is scheduled. *nnnn* must be a number from 100 through 5000 milliseconds. If a member of a sysplex group and all IRLMs are not enabled for subsecond deadlock processing, message DXR106E is issued.

© Copyright IBM Corp. 1983, 2024

LTE= *nnnn*
Specifies the number of lock table entries that are to be specified on the next connect to the XCF lock structure. *nnnn* must be a number from 0 through 2048, and it must be an exact power of 2. Each increment in value represents 1 048 576 LTE entries. Note that this parameter is used for data sharing only.

MLT= *nnnnnU*
Specifies the upper limit of private storage above the two gigabyte bar, also called the MEMLIMIT, that is managed by MVS. This command allows you to dynamically change the MEMLIMIT for IRLM. This storage is used for locks and deadlock processing. The value *nnnnn* is a five digit number in the range 1 through 99999, and *U* is a one character unit indicator with the value of M for megabytes, G for gigabytes, T for terabytes, or P for petabytes. The MLT value that is specified for IRLM must be at least 2 GB. The MLT value that is specified for IRLM must be at least 2 GB. The setting of the MEMLIMIT value through the MLT parameter is temporary, holding only as long as the execution of the IRLM instance. To make a permanent MEMLIMIT change, update the MEMLIMIT value in the corresponding IRLM startup procedure.

PVT= *nnnn*
Specifies the upper limit of private storage, below the two gigabyte bar. *nnnn* must be a four digit number from 1 through 1800. You can specify this value in megabytes or gigabytes by specifying M (for megabytes) or G (for gigabytes) after the value, as follows, *nnnn* M or *nnnn* G. IRLM monitors the amount of private storage used for locks. If the specified limit is reached, new lock requests will be rejected unless they are **must complete**. If the specified value is out of range or if IRLM's use of private storage is already larger than the specified value, the command is rejected with message DXR106E. No reserve for must complete locks is calculated from the specified PVT= value.

TIMEOUT= *nnnn,subsystem-name*
Requests that IRLM dynamically set the timeout value, in seconds, for the specified subsystem. *nnnn* must be a number from 1 through 3600. *subsystem-name* is the Db2 subsystem name, as displayed by the MODIFY irlmproc,STATUS command.

TRACE= *nnn*
Requests that IRLM dynamically set the maximum number of 64 KB trace buffers per trace type to the value you specify in *nnn* . *nnn* must be a number from 10 through 255. If you specify a value outside of this range, IRLM automatically adjusts the value to a value within the range.

The **default** is 10 .

This value is used only when the external CTRACE writer is not active. The trace buffers are allocated from extended common storage area (ECSA).

IRLM does not immediately acquire the number of trace buffers you set using this command; IRLM allocates buffers as needed, not to exceed the number of buffers you specify. If the number of trace buffers that you set is less than the number of currently allocated buffers, IRLM brings the number within your specified range by releasing the oldest buffers at the end of the next deadlock cycle.

Usage notes

Effect of an IRLM restart

The values you set using the MODIFY irlmproc,SET command do not persist through a stop and restart of IRLM. The number of trace buffers for each trace type returns to the default value of 10.

TIMEOUT considerations

The TIMEOUT value must be a multiple of the local deadlock parameter. If the value entered is not an even multiple of the deadlock parameter, IRLM will increase the timeout value to the next highest multiple. This new value is used until the IRLM or identified subsystem is terminated, or the timeout is changed again by the operator. The value specified on the command does *not* affect the timeout value in the Db2 subsystem parameters.

The LTE value is used in the following order:

1. The value specified using the MODIFY irlmproc,SET,LTE= command, if the value is greater than zero.
2. The value from the LTE= in the IRLMPROC, if the value is greater than zero.
3. The value determined by the existing logic, which divides the XES structure size returned on the XESQUERY call by 2 multiplied by the LTE width. The result is rounded to the nearest power of 2, which the existing logic uses for the value.

   Note: The LTE width is determined by the MAXUSRS value.

If an attempt is made to use a nonzero value from either option number 1 or 2, and that value is too large for the structure size that is returned on the QUERY, the value from the next option in the sequence is used instead.

Deadlock value range for non-supporting members
When an IRLM that supports subsecond deadlock joins a group that has a member that does not support subsecond deadlock, if the deadlock value of the new member is less than one second, the value is set to one second.

Trace information for commands issued with group scope
If this command is issued with options that specify group scope in a Db2 data sharing member, it also runs on all other active members. IFICID 090 trace records for other group members can show that the same command was issued by the SYSOPR authorization ID from the 016.TLPKN5F correlation ID, in addition to the trace records from the member where the original command was issued. See Command scope in Db2 data sharing (Db2 Data Sharing Planning and Administration).

Examples

Example 1: Enter the following command on a z/OS system console:

```
F IR21PROC,SET,TRACE=20
```

Response on the z/OS system console is as follows:

```
DXR177I IR21033 THE VALUE FOR TRACE IS SET TO 20.
```

Example 2: Enter the following command on a z/OS system console:

```
F IR21PROC,SET,TIMEOUT=60,DBMS
```

Response on the z/OS system console is as follows:

```
DXR177I IR21033 THE VALUE FOR TIMEOUT IS SET TO 60 FOR DBMS
```

Example 3: Enter the following command on a z/OS system console:

```
F IR21PROC,SET,LTE=1024
```

Response on the z/OS system console is as follows:

```
DXR177I IR21033 THE VALUE FOR LTE IS SET TO 1024
```

Example 4: Enter the following command on a z/OS system console:

```
F IR21I,SET,DEADLOCK=1000
```

Response on the z/OS system console is as follows:

```
DXR177I IR21033 THE VALUE FOR DEADLOCK IS SET TO 1000 MILLISECONDS
```

Example 5: Enter the following command on a z/OS console:

```
F IR21I,SET,PVT=1000
```

Response from the z/OS system console is as follows:

```
DXR177I IR21033 THE VALUE FOR PVT IS SET TO 1000
```

Example 6: Enter the following command on a z/OS console:

```
F IR21I,SET,MLT=4G
```

Response from the z/OS system console is as follows:

```
DXR177I IR21033 THE VALUE FOR MLT IS SET TO 4G
```

Chapter 54. MODIFY irlmproc,STATUS command (z/OS IRLM)

The MODIFY *irlmproc*,STATUS command displays information for one or more subsystems connected to the IRLM that is specified using *irlmproc* .

Each subsystem connected to the specified IRLM is listed, including subsystem name, status, work unit, lock information, the current values of the IRLM TIMEOUT, and DEADLOCK parameter values. Additionally, you can list an IRLM's ID and service level. For a specified IRLM, you can display the current storage allocated, as well as the greatest amount of storage that was allocated since the last time this IRLM was started.

Abbreviation: F

Environment

This command can be issued only from a z/OS console.

Data sharing scope: Group or member

Authorization

The command requires an appropriate level of z/OS authority.

Syntax

```
►► MODIFY ── irlmproc,STATUS ──┬──────────────────┬──►◄
                               │ ,irlmx           │
                               │ ,ALLD            │
                               │ ,ALLI            │
                               │ ,MAINT           │
                               │ ,STOR            │
                               │ ,TRACE           │
```

Option descriptions

irlmproc
Specifies the IRLM that is to process the command.

irlmx
Specifies which IRLM's status is to be displayed. *irlmx* is the concatenation of the IRLM subsystem name and IRLM member ID as specified in the IRLM startup procedure (Db2 installation panel DSNTIPI). An example is DJ2A2 (the member ID is 2).

ALLD
Requests the Db2 subsystem name and status of a Db2 that is identified to an IRLM. In a data sharing group, this command lists information about all Db2 subsystems that are currently identified to an IRLM, assuming that the IRLM on which the command is issued is connected to the data sharing group. You can determine if the IRLM is connected by issuing a MODIFY irlmproc,STATUS command and checking that the output shows SCOPE=GLOBAL.

If a Db2 is down and holds retained locks, that Db2 is also displayed. However, the IRLM that is displayed with that Db2 can vary depending on several circumstances:

© Copyright IBM Corp. 1983, 2024

- Normally, it is the last IRLM to which the Db2 subsystem identified.
- If a rebuild of the lock structure occurred after the retained locks were created, the IRLM with the lowest member ID at the time the rebuild occurred is displayed.
- If a group restart is occurring and one Db2 subsystem is recovering on behalf of another Db2 subsystem, the IRLM that is displayed is the one associated with the Db2 subsystem doing the peer recovery. For example, if DB1A is doing a peer recovery of DB2A, the display might show the following information:

```
NAME  STATUS ... IRLM_NAME
DB1A  UP         IRLA
DB2A  DOWN       IRLA
```

ALLI
Requests the IRLM subsystem name, ID, status, and service level. In a data sharing group, this command lists information about all IRLM subsystems in the data sharing group, assuming that the IRLM on which the command is issued is connected to the data sharing group. You can determine if the IRLM is connected by issuing a MODIFY irlmproc,STATUS command and checking that the output shows SCOPE=GLOBAL.

In a list of IRLM subsystems in a data sharing group, the name of the IRLM that is the global deadlock manager is followed by an asterisk (*).

If an IRLM is down, it is displayed only if its associated Db2 subsystem is down and holds retained locks. The IRLM that is displayed can vary depending on several circumstances:

- Normally, it is the last IRLM to which the Db2 subsystem identified.
- If a rebuild of the lock structure occurred after the retained locks were created, the IRLM with the lowest member ID at the time the rebuild occurred is displayed.
- If the failed Db2 subsystem had recovery done on its behalf by another Db2 subsystem, the IRLM that is displayed is the one associated with the Db2 subsystem that did the peer recovery.

MAINT
For this IRLM only, displays the maintenance levels of IRLM load module CSECTS in a two-column format.

STOR
For this IRLM only, displays the current and maximum allocation for CSA, ECSA, and private extended storage.

TRACE
Requests information about IRLM subcomponent trace types. Information includes whether a subcomponent trace type is active, how many trace buffers are used by the trace, and whether the component trace external writer is active for the trace.

Output

Output from the command is presented in a DXR message. The command options determine which DXR message is used.

- DXR100I (IRLM messages and codes)
- DXR101I (IRLM messages and codes)
- DXR102I (IRLM messages and codes)
- DXR103I (IRLM messages and codes)
- DXR104I (IRLM messages and codes)
- DXR179I (IRLM messages and codes)

Usage notes

Messages:

If *irlmx* is not specified, or if this IRLM is in a non-data-sharing environment, message DXR101I is issued. That message lists each subsystem connected to the IRLM specified by *irlmx* , with an indication as to whether the connection is active.

Displaying IRLM IDs

If *irlmproc* is started specifying SCOPE=GLOBAL, the second line of the display indicates the IRLM IDs of the IRLM subsystems.

Examples

Example 1: Enter the following command on the z/OS system console:

```
MODIFY IRTPROC,STATUS
```

Response on the z/OS system console:

```
DXR101I IR2T001 STATUS SCOPE=LOCAL
DEADLOCK:0500
        SUBSYSTEMS IDENTIFIED                PT01
        NAME      T/OUT    STATUS    UNITS     HELD      WAITING     RET_LKS
        DSNT1     0010      UP       0005      0010      0002        0
```

Explanation: The operator on the z/OS system has requested information about the Db2 systems connected to the IRLM identified by the IRLM procedure named IRTPROC.

If the IRLM is SCOPE=GLOBAL on the irlmproc and is not connected to any group, the status message shows:

```
DXR101I IR21001 STATUS SCOPE=DISCON DEADLOCK: dddd SUBSYSTEMS IDENTIFIED
NAME   T/OUT  STATUS UNITS HELD WAITING RET_LKS
ssname zzz    wun    reh   rew  rtlks
```

Use the information in message DXR101I (IRLM messages and codes) to interpret the output.

Example 2: Assume that you have a data sharing group. Enter the following command on the system console:

```
MODIFY DB1GIRLM,STATUS,ALLD
```

The response on the system console is as follows:

```
11.11.07 STC00061  DXR102I DJ1G001 STATUS                              C
        SUBSYSTEMS IDENTIFIED
        NAME     STATUS    RET_LKS   IRLMID  IRLM_NAME  IRLM_LEVL
        DB1G     UP              0    001      DJ1G        2.022
        DB2G     UP              0    002      DJ2G        1.022
    DXR102I End of display
```

Explanation: The output shows all the Db2 subsystems that are connected to IRLMs in this data sharing group (the group to which the IRLM processing the request belongs).

Use the information in message DXR102I (IRLM messages and codes) to interpret the output.

Example 3: To display information about a specific member of a data sharing group, enter the following command:

```
MODIFY DB1GIRLM,STATUS,DJ1G002
```

Response on system console is as follows:

```
11.11.21 STC00061 DXR102I DJ1G001 STATUS                          C
        SUBSYSTEMS IDENTIFIED
        NAME     STATUS    RET_LKS  IRLMID  IRLM_NAME   IRLM_LEVL
```

```
        DB1G     UP              0   002      DJ1G         2.022
     DXR102I End of display
```

Explanation: This output shows information similar to the output that is shown in example 1, but this command specifies a specific IRLM in the data sharing group.

Use the information in message DXR102I (IRLM messages and codes) to interpret the output.

Example 4: Again, assume data sharing is in effect. Enter the following command on the system console:

```
MODIFY DB1GIRLM,STATUS,ALLI
```

The response on the console is as follows:

```
11.11.00 STC00061  DXR103I DJ1G001 STATUS                          C
        IRLMS PARTICIPATING IN DATA SHARING GROUP FUNCTION LEVEL=1.022
        IRLM_NAME IRLMID STATUS LEVEL  SERVICE  MIN_LEVEL MIN_SERVICE
          DJ1G      001    UP   2.022  HIR2220    2.022     HIR2220
          DJ2G      002    UP   1.022  PQ52360    1.012     PN90337
    DXR103I End of display
```

Explanation: The output shows the IRLMs that are participating in this data sharing group (the group which includes the IRLM processing the request).

Use the information in message DXR103I (IRLM messages and codes) to interpret the output.

Example 5: Assume that this command is issued in a non-data-sharing environment. Enter the following command on the system console:

```
MODIFY DB1GIRLM,STATUS,ALLI
```

The response on the console is as follows:

```
11.11.03 STC00082  DXR103I DJ1G001 STATUS                           C
        IRLMS PARTICIPATING IN DATA SHARING GROUP FUNCTION LEVEL=2.022
        IRLM_NAME IRLMID STATUS LEVEL SERVICE MIN_LEVEL MIN_SERVICE
          DJ1G      001    UP   2.022 HIR2220   1.022     PQ523690
     DXR103I End of display
```

Explanation: The output shows information only for the specified IRLM. The group function level that is shown is the function level for the specified IRLM.

Use the information in message DXR103I (IRLM messages and codes) to interpret the output.

Example 6: Enter the following command on the system console:

```
MODIFY IR21PROC,STATUS,STOR
```

The response on the console is as follows:

```
DXR100I IR21021 STOR STATS
      PC: YES  LTEW:n/a LTE:      M RLE:          RLEUSE:
      BB PVT:  1495M  AB PVT (MEMLIMIT):  16383P
      CSA USE: ACNT:     0K  AHWM:     0K  CUR:   312K  HWM:   312K
              ABOVE 16M:    16    312K     BELOW 16M:     0      0K
              AB CUR:             25M     AB HWM:            150M
      PVT USE:   BB CUR:  4377K        AB CUR:     5M
                 BB HWM:   1.5M        AB HWM:    12M
      CLASS   TYPE  SEGS     MEM   TYPE  SEGS     MEM   TYPE  SEGS     MEM
      ACCNT    T-1     2      4M    T-2     1      1M    T-3     1      4K
      PROC     WRK     4     20K    SRB     1      1K    OTH     1      1K
      MISC     VAR     8   4310K    N-V    12    323K    FIX     1     24K
      ******************************************************************
*                 IRLM Subpool Storage Stat                            *
*********************************************************************
POOLNAME    PTYPE     STORAGE  #SEGMENTS  #ELEM/S  #EXPN    #CMPR
pname       ptype       pstor      psegs   pelems   pexpn    pcmpr
DXR100I  END OF DISPLAY
```

Explanation: The example shows that current storage allocated for IRLM is 312 KB, and the greatest amount that has been allocated since the last time IRLM was started is also 312 KB. The storage for the locking structures (RHB and RLB) is contained within IRLM private storage.

Use the information in message DXR100I (IRLM messages and codes) to interpret the output.

Example 7: Enter the following command on the system console:

```
MODIFY PR21PROC,STATUS,TRACE
```

The command displays the following output on the system console:

```
DXR179I PR21034 TRACE USAGE
TRACE BUFFER STORAGE IN USE:   256 KB
MAXIMUM NUMBER OF TRACE BUFFERS ALLOWED PER TRACE TYPE:   10
TRACE TYPE   ACTIVE   BUFFERS IN USE   CTRACE WRITER
----------   ------   --------------   -------------
   SLM          N            0               N
   XIT          Y            2               N
   XCF          N            0               N
   DBM          N            0               N
   EXP          Y            1               N
   INT          Y            1               N
```

Explanation: This example shows that the storage currently allocated for IRLM tracing is 256 KB, the maximum number of trace buffers allowed per trace type is set to 10, and the external CTRACE writer is not active.

Use the z/OS TRACE CT command to activate or deactivate traces. You cannot turn off the EXP and INT traces. The XIT (for data sharing), EXP, and INT traces are automatically activated when you start IRLM. All traces are automatically activated with IRLMPROC TRACE=YES.

The trace size for each buffer is 64 KB. Use the MODIFY irlmproc,SET,TRACE= *nnn* command to change the maximum number of trace buffers.

Use the information in message DXR179I (IRLM messages and codes) to interpret the output.

Example 8: Enter the following command on the system console:

```
MODIFY IR21I,STATUS,MAINT
```

The command displays the following output on the system console:

```
 DXR104I IR21240 MAINTENCE LEVELS
     LMOD.Csect     MaintLv   Date       Csect    APAR     DATE
 DXRRLM00.DXRRL010  PQ35083 02/22/00    DXRRL020  PQ35083 02/22/00
          DXRRL030  PQ27464 08/18/99    DXRRL040  PQ35083 02/22/00
```

Explanation: The output shows the maintenance levels of IRLM load module CSECTS in a two-column format.

Use the information in message DXR104I (IRLM messages and codes)DXR104I to interpret the output.

Chapter 55. -MODIFY TRACE command (Db2)

The Db2 command MODIFY TRACE changes the IFCIDs (trace events) associated with a particular active trace.

The Db2 command MODIFY TRACE completes the following actions:

- Changes the trace events (IFCIDs) being traced for a particular active trace.
- Stops any IFCID previously active for the specified trace.
- Writes statistics records.

Abbreviation: -MOD TRA

Environment

This command can be issued from a z/OS console, a DSN session, a DB2I panel (DB2 COMMANDS), an IMS or CICS terminal, or a program using the instrumentation facility interface (IFI).

Data sharing scope: Member

Traces started by a IFI/IFC program: Before you modify an active trace, ensure that an IFI application program or the IFC Selective Dump utility (DSN1SDMP) did not start the trace. If you modify a trace started by DSN1SDMP, the DSN1SDMP utility abnormally terminates. When DSN1SDMP terminates, it stops the trace. This stop could interfere with the MODIFY TRACE command, which stops and restarts the trace.

Authorization

To execute this command, you must use a privilege set of the process that includes one of the following privileges or authorities:

- TRACE privilege
- SQLADM authority
- System DBADM authority
- SYSOPR authority
- SYSCTRL authority
- SYSADM authority
- SECADM authority

Db2 commands that are issued from a logged-on z/OS console or TSO SDSF can be checked by Db2 authorization using primary and secondary authorization IDs. A logged-on z/OS user ID must be defined in RACF or a similar security server.

© Copyright IBM Corp. 1983, 2024

Syntax

```
►► MODIFY TRACE ── ( ┬─ PERFM ─┬ ) ── CLASS( ┌─*─┐ ┌─,─┐ integer ─┐ ) ──►
                     ├─ ACCTG ─┤                └─────┘
                     ├─ STAT ──┤
                     ├─ AUDIT ─┤
                     └─ MONITOR┘

►── TNO( integer) ── IFCID( ┌─*─┐ ┌─,─┐ ifcid_nbr ─┐ ) ┬──────────────────────┬ ►◄
                            └─────┘                   └─ COMMENT( string ) ─┘
```

Option descriptions

TRACE

Determines which IFCIDs are started. The following table lists each trace type, its abbreviation, and a brief description of each type.

One additional trace type is not described in the table because it is intended for service and is to be used under the direction of IBM Support.

Table 18. Trace types

Type	Abbreviation	Description
PERFM	P	Performance records of specific events
ACCTG	A	Accounting records for each transaction
STAT	S	Statistical data
AUDIT	AU	Audit data
MONITOR	MON	Monitor data

CLASS(*integer* , ...)

Limits the list to IFCIDs started for specified classes.

Abbreviation: C

integer is a class to which the list of IFCIDs started is limited.

The **default** is CLASS(*) , which starts all default IFCID classes.

TNO(*integer*)

Specifies the particular trace to be modified, identified by its trace number (1 to 32, 01 to 09). You can specify only one trace number. TNO is a required option for the MODIFY TRACE command.

No default exists for the TNO keyword.

IFCID(*ifcid_nbr* , ...)

Specifies which other IFCIDs (trace events), in addition to those IFCIDs contained in the classes specified in the CLASS option, are to be started. To start only those IFCIDs specified in the IFCID option, use trace classes 30-32. These classes have no predefined IFCIDs and are available for a location to use.

If you do not specify the IFCID option, only those IFCIDs contained in the activated trace classes are started.

The maximum number of IFCIDs is 156. The range of values that are valid for the IFCID option is 1 through 350, with the exception of: 4, 5, 185, 187, 217, 232, 234, 240, and 241.

The **default** is `IFCID( * )`.

COMMENT (*string*)
Specifies a comment that is reproduced in the trace output record (except in the resident trace tables).

string is any character string; it must be enclosed between apostrophes if it includes a blank, comma, or special character.

Example

Example 1:Change trace number six so that it collects only statistics and accounting data. You can define CLASS(30) at your site.

```
-MODIFY TRACE(S) IFCID(1,2,3) TNO(6) CLASS(30)
  COMMENT ('STATS AND ACCOUNTING ON')
```

Related reference

-STOP TRACE command (Db2)
The Db2 command STOP TRACE stops tracing.

-START TRACE command (Db2)
The Db2 command START TRACE starts Db2 traces.

-DISPLAY TRACE command (Db2)
The Db2 command DISPLAY TRACE displays a list of active traces.

Chapter 56. REBIND PACKAGE subcommand (DSN)

The DSN subcommand REBIND PACKAGE rebinds an application package when you make changes that affect the package, but have not changed the SQL statements in the program.

For example, you can use REBIND PACKAGE after you complete the following activities:

- Migrate to a new Db2 release
- Apply maintenance to Db2
- Modify authorizations
- Create a new index that statements in the package can use
- Collect statistics using the RUNSTATS utility or with another utility by using the STATISTICS keyword

This command can be used to rebind a package for advanced triggers. However, issuing the REBIND PACKAGE command with a trigger created prior to the activation of function level 500 or higher, or with a basic trigger, results in an error.

For a trigger package for an advanced trigger, you can use REBIND PACKAGE for the following activities:

- Reoptimize SQL statements in the trigger after you create a new index or use the RUNSTATS utility
- Change some of the default bind options that were used when the package was created
- Make a trigger package valid after it was marked as invalid because an object on which the trigger was dependent was dropped

You can use REBIND PACKAGE to change the default rest service version for an existing REST service.

REBIND PACKAGE is generally faster and more economical than BIND PACKAGE. You should use BIND PACKAGE with the ACTION(REPLACE) option under the following conditions:

- When you change the SQL statements
- When you recompile the program
- When you have previously run BIND PACKAGE with the SQLERROR(CONTINUE) option

When the REBIND PACKAGE(*) command is issued, the only affected trigger packages are those for advanced triggers that the issuer is authorized to rebind.

Phase-in of package copies for REBIND PACKAGE

FL 505

The REBIND PACKAGE command might create a new current copy of the package, while retaining the existing current copy as a phase-out copy. This is called *rebind phase-in*. There may be multiple copies of an existing package, but there will only ever be one current copy. There may be one original copy, one previous copy, and multiple phased-out copies.

The current copy, with copy ID 0 (or non-0) is stored in the catalog table SYSPACKAGE. The previous and original copies have copy ID 1 and 2 respectively, and can be found in the SYSPACKCOPY table. All phased-out copies have a copy ID other than 1 and 2 and can be found in SYSPACKCOPY as well.

The package copy that a thread executes can be found in the package accounting trace record. That copy can be either current or phased-out. Db2 might delete the phased-out copies on subsequent executions of the REBIND PACKAGE command. You may want to quiesce threads which execute the phased-out copies and then rebind the package to reduce storage incurred by phased-out copies.

Rebind phase-in is supported for the following options:

- APREUSE(NONE) PLANMGMT(EXTENDED)
- APREUSE(WARN) PLANMGMT(EXTENDED) APREUSESOURCE(CURRENT)
- APREUSE(ERROR) PLANMGMT(EXTENDED) APREUSESOURCE(CURRENT)

© Copyright IBM Corp. 1983, 2024

- The package is not a generated package for a trigger or SQL routine, such as a procedure or user-defined function.

Db2 waits for the duration specified by the IRLMRWT subsystem parameter before it creates package copies for the rebind phase-in operation.

For more information, see Phase-in of package rebinds (Db2 Application programming and SQL)

Environment for REBIND PACKAGE

You can use REBIND PACKAGE through DB2I, or enter the REBIND PACKAGE subcommand from a DSN session running in foreground or background.

Data sharing scope: Group

Authorization for REBIND PACKAGE

The package owner must have authorization to execute all SQL statements embedded in the package for REBIND PACKAGE to build a package without returning error messages. For VALIDATE(BIND), Db2 verifies the authorization at bind time. For VALIDATE(RUN), Db2 verifies the authorization initially at bind time, but if the authorization check fails, Db2 rechecks it at run time.

When EXPLAIN(ONLY) is specified, you must have the EXPLAIN privilege.

The package owner must be a role to execute REBIND PACKAGE in a trusted context with role ownership.

The following table explains the authorization required to run REBIND PACKAGE, depending on the options specified.

Table 19. Summary of privileges for REBIND PACKAGE

Option	Authorization required to run REBIND PACKAGE
REBIND PACKAGE with no change in ownership because the OWNER keyword is not specified.	The authorization IDs of the process must have one of the following authorities: • Ownership of the package • BIND privilege on the package • BINDAGENT privilege from the owner of the package • PACKADM authority on the collection or on all collections • SYSADM or SYSCTRL or System DBADM authority
REBIND PACKAGE with no change in ownership, although the original owner is specified for the OWNER keyword.	The authorization IDs of the process must have one of the following authorities: • OWNER *authorization-id* must be one of the primary or secondary authorization IDs of the binder • BINDAGENT privilege from the owner of the package

Table 19. Summary of privileges for REBIND PACKAGE (continued)

Option	Authorization required to run REBIND PACKAGE
REBIND PACKAGE with change of ownership. (An authorization ID that is not the original owner is specified in the OWNER keyword.)	The new OWNER must have one of the following authorities: • BIND privilege on the package • PACKADM authority on the collection or on all collections • SYSADM or SYSCTRL or system DBADM authority If any of the authorization IDs or roles of the process has SYSADM authority, SYSCTRL authority, or system DBADM authority, OWNER *authorization-id* can be any value, when subsystem parameter SEPARATE_SECURITY is set to NO. If any of the authorization IDs has the BINDAGENT privilege granted from the owner, *authorization-id* can specify the grantor as OWNER. Otherwise, the OWNER *authorization-id* must be one of the primary or secondary authorization IDs of the binder. If you specify OWNER *authorization-id* , Db2 first checks the OWNER and then the binder for the necessary bind privilege. If the binder does not have SYSADM, SYSCTRL, or system DBADM authority, the authorization ID or role of the OWNER must have one of the following to add a new package or new version of an existing package to a collection: • The BINDADD system privilege and either the CREATE IN privilege or PACKADM authority on the collection or on all collections • SYSADM, SYSCTRL, or system DBADM authority

Syntax for REBIND PACKAGE

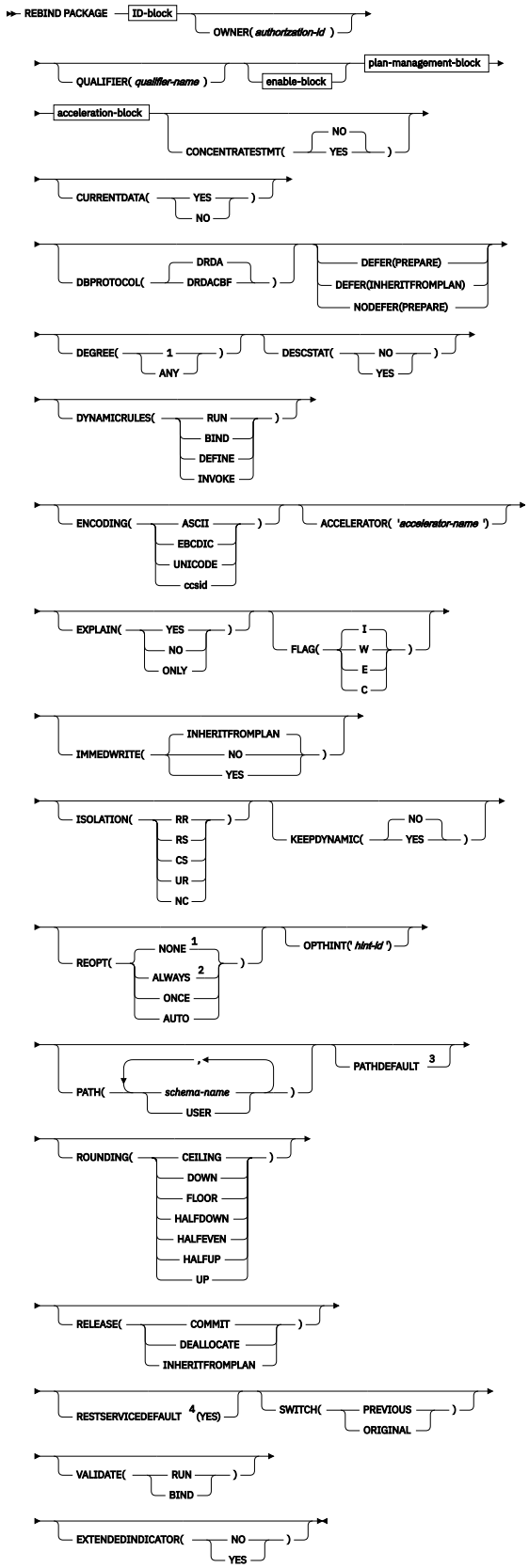

Notes:

[1] NOREOPT(VARS) can be specified as a synonym of REOPT(NONE)

[2] REOPT(VARS) can be specified as a synonym of REOPT(ALWAYS)
[3] The PATHDEFAULT keyword is mutually exclusive with the PATH keyword. Do not specify both keywords in the same REBIND command.
[4] The RESTSERVICEDEFAULT option is only valid for local REST service packages.

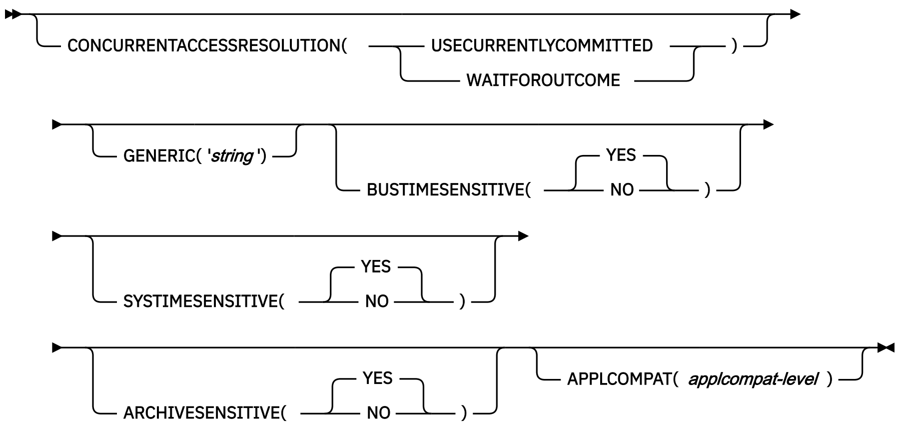

ID-block

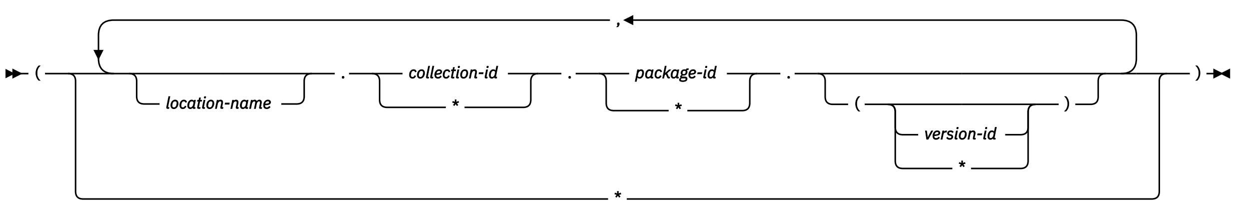

enable-block

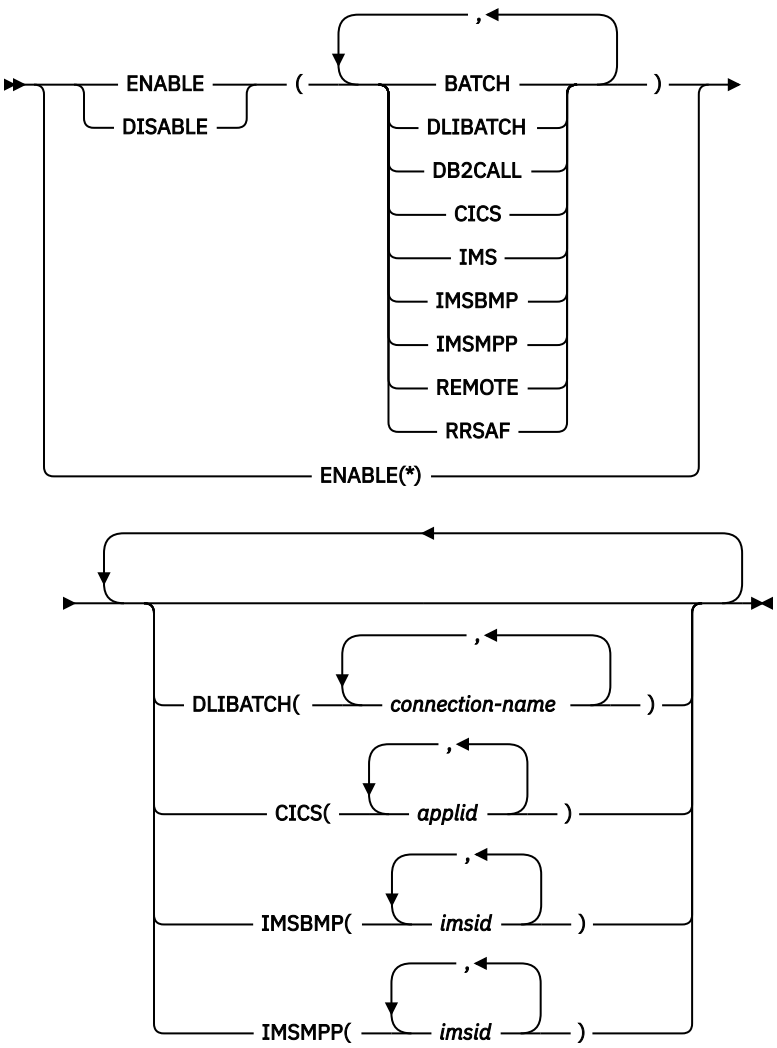

plan-management-block

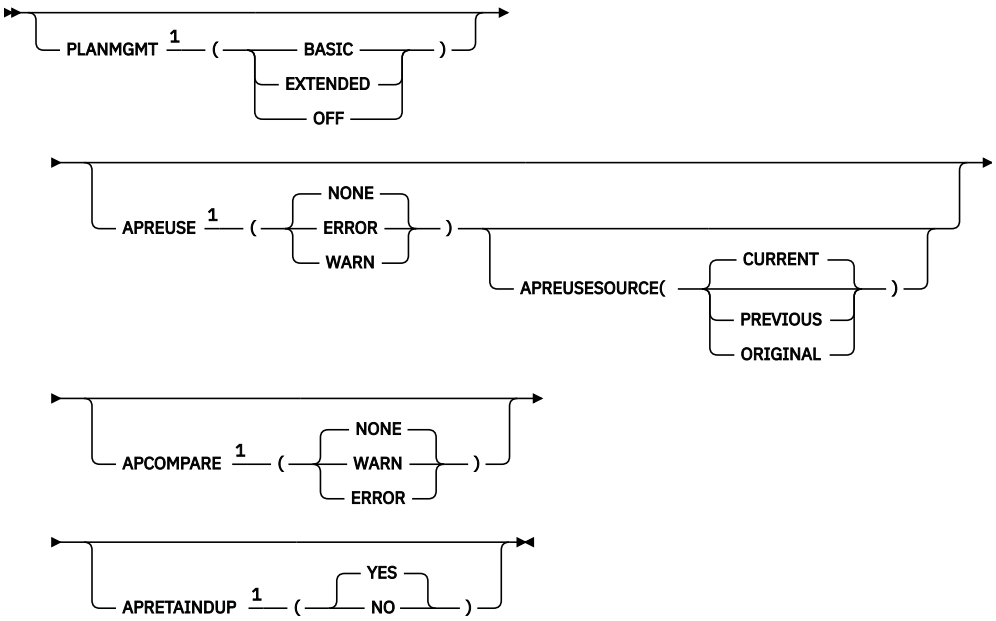

Notes:

[1] This option is not supported for trigger packages.

acceleration-block

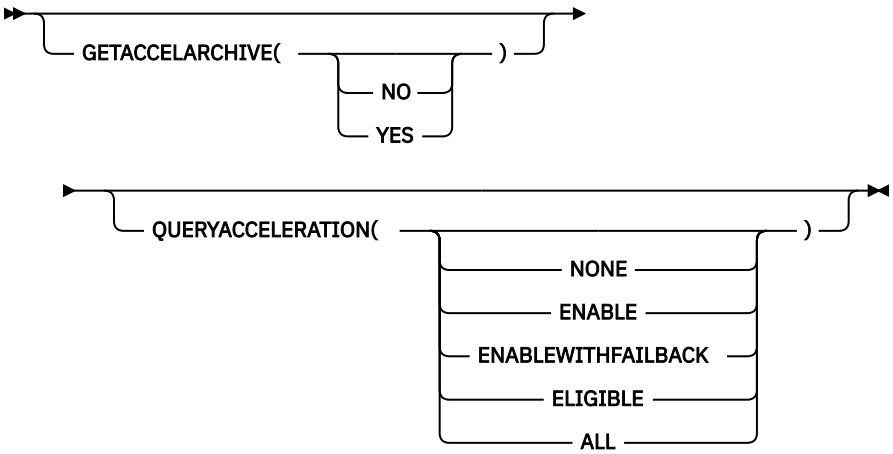

acceleration-block

```
QUERYACCELERATION( NONE | ENABLE | ENABLEWITHFAILBACK | ELIGIBLE | ALL )
GETACCELARCHIVE( NO | YES )
ACCELERATIONWAITFORDATA( 'nnnn.m' ) ACCELERATOR( 'accelerator-name' )
QUERYACCELERATION( NONE | ENABLE | ENABLEWITHFAILBACK | ELIGIBLE | ALL )
GETACCELARCHIVE( NO | YES )
ACCELERATIONWAITFORDATA( 'nnnn.m' ) ACCELERATOR( 'accelerator-name' )
```

Descriptions for REBIND PACKAGE

The following options identify the packages to rebind by specifying the location, collection, package name, and version. You must identify a package name, and you can also supply a version ID.

location-name

The location of the DBMS where the package rebinds and where the description of the package resides. The location name must be defined in the SYSIBM.LOCATIONS catalog table. If that table does not exist or if the DBMS is not in it, you receive an error message. See LOCATIONS catalog table (Db2 SQL).

The default is the local DBMS.

***collection-id* or ***

Specifies the collection to contain the package to bind, or that already contains the package to rebind. There is no default.

You can use an asterisk (*) to rebind all local packages with the specified *package-id* in all the collections for which you have bind privileges.

package-id or *

Specifies the name of the package to rebind, as listed in column NAME of catalog table SYSPACKAGE. There is no default. You can use an asterisk (*) to rebind all local packages in *collection-id* for which you have bind privileges.

The *package-id* value can be an undelimited or delimited identifier. The delimiter for package-id is double quotation marks ("). If *package-id* is delimited, Db2 does not convert the value to uppercase.

***version-id* or ***

Specifies the version of the package to rebind, as listed in column VERSION of catalog table SYSPACKAGE.

You can use an asterisk (*) to rebind all local versions of the specified *package-id* in *collection-id* for which you have bind privileges.

Using only `()` rebinds the version of the package that is identified by the empty string.

If you omit *version-id* , the default depends on the how you specify *package-id* . If you use * for *package-id* , then *version-id* defaults to *. If you explicitly provide a value for *package-id* , then *version-id* defaults to the empty string version.

*****

Rebinds all local Db2 packages for which the applicable authorization ID has the BIND privilege. Specifying `(*)` is the same as specifying the package name as `(*.*.(*))` or `(*.*)`. The applicable authorization ID is:

- The value of OWNER, if you use that option
- The primary authorization ID of the process running the bind, if you do not use the option OWNER

Other options for REBIND PACKAGE

For descriptions of the other options in the syntax diagram, see the topic Chapter 14, “BIND and REBIND options for packages, plans, and services ,” on page 81.

Usage notes for REBIND PACKAGE

Rebinding multiple packages

If you rebind multiple packages, Db2 commits each successful rebind before rebinding the next package.

Phase-in of package rebinds

FL 505With *rebind-phase in*, Db2 can rebind a package concurrently with its execution. A rebind operation creates a new copy of the package. When the rebind operation finishes, new threads can use the new package copy immediately, and existing threads can continue to use the copy that was in use prior to the rebind (the phased-out copy) without disruption. For more information, see Phase-in of package rebinds (Db2 Application programming and SQL).

Rebinding a package for a native SQL procedure

If you issue a REBIND PACKAGE command against a native SQL procedure package, the only bind options that you can change are EXPLAIN, PLANMGMT, SWITCH, APRETAINDUP, APREUSE, APREUSESOURCE, and APCOMPARE. If you try to change other bind options the command will fail and return message DSNT215I. The REBIND PACKAGE command rebinds only the SQL statements included in the procedure and not the control statements in the procedure definition.

Rebinding a package for an SQL function

If you issue a REBIND PACKAGE command against a package for an SQL function, the only bind options that you can change are EXPLAIN, PLANMGMT, and SWITCH. If you try to change other bind options, the command will fail and return message DSNT215I. The REBIND PACKAGE command rebinds only the SQL statements included in the function and not the control statements in the function definition.

Rebinding a packages for triggers

Although DBCS characters are generally allowed in trigger names, trigger names that contain DBCS characters cannot be used in REBIND TRIGGER PACKAGE operations.

Rebinding packages for advanced triggers

If you issue a REBIND PACKAGE command against a package for an advanced trigger, the only bind options that you can change are EXPLAIN (but EXPLAIN(ONLY) is not accepted), FLAG, PLANMGMT, and CONCENTRATESTMT. If you try to change other bind options, the command will fail and return message DSNT215I.

The REBIND PACKAGE command rebinds only the SQL statements included in the trigger and not the control statements in the trigger definition.

Restrictions for trigger packages

A trigger package can be explicitly rebound, but it cannot be explicitly bound using the BIND PACKAGE subcommand. A trigger package cannot be explicitly freed using the FREE PACKAGE subcommand or the DROP PACKAGE statement. Use the DROP TRIGGER statement to delete the trigger package. A trigger package cannot be copied, and it can only be rebound locally. Remote rebind of a trigger package is not allowed.

Trace information for data sharing members

When this command with group scope is issued in a Db2 data sharing member, it also runs on all other active members. IFICID 090 trace records for other group members can show that the same command was issued by the SYSOPR authorization ID from the 016.TLPKN5F correlation ID, in addition to the trace records from the member where the original command was issued. See Command scope in Db2 data sharing (Db2 Data Sharing Planning and Administration).

Example for REBIND PACKAGE

Rebind packages TEST.DSN8BC81.(MAY_VERSION) and PRODUCTION.DSN8BC81.(DEC_VERSION), both of which are located at the local location USIBMSTODB22. The packages can run only from the CICS or the DLIBATCH environments if the connection ID is CON2. This replaces the CON1 that is specified on the BIND PACKAGE command.

```
REBIND PACKAGE (USIBMSTODB22.TEST.DSN8BC81.(MAY_VERSION),
                USIBMSTODB22.PRODUCTION.DSN8BC81.(DEC_VERSION)) -
  ENABLE (CICS,DLIBATCH) CICS (CON2)
```

Related concepts

Package copies for plan management (Db2 Performance)

Related tasks

Rebinding a package (Db2 Application programming and SQL)

Reusing and comparing access paths at bind and rebind (Db2 Performance)

Related reference

REBIND PLAN command (DSN)

The DSN subcommand REBIND PLAN rebinds an application plan when you make changes to the attributes of the plan, such as the package list.

BIND PACKAGE subcommand (DSN)

The DSN subcommand BIND PACKAGE builds an application package. Db2 records the description of the package in the catalog tables and saves the prepared package in the directory. BIND PACKAGE also deletes phased-out package copies.

BIND and REBIND options for packages, plans, and services

There are several options you can use for binding or rebinding packages, plans, and services. Some of the options are common for both BIND and REBIND operations.

Chapter 57. REBIND PLAN command (DSN)

The DSN subcommand REBIND PLAN rebinds an application plan when you make changes to the attributes of the plan, such as the package list.

For example, you can use REBIND PLAN when you change authorizations, modify package lists for the plan, or use RUNSTATS. If the rebind is successful, the process prepares an application plan and updates its description in the catalog table SYSPLAN.

REBIND PLAN is generally faster and more economical than BIND PLAN. But if you change the SQL statements or recompile a program, you should use BIND PLAN with the option ACTION(REPLACE).

Environment

You can use REBIND PLAN through DB2I, or enter the REBIND PLAN subcommand from a DSN session running in foreground or background.

Data sharing scope: Group

Authorization

The plan owner must be a role to execute REBIND PLAN in a trusted context with role ownership.

If you use the PKLIST keyword, you must have EXECUTE authority for the packages or collections specified on PKLIST.

The following table explains the authorization required to run REBIND PLAN, depending on the options specified.

Table 20. Summary of privileges for REBIND PLAN

Option	Authorization required to run REBIND PLAN
REBIND PLAN with no change in ownership because the OWNER keyword is not specified.	The authorization IDs of the process must have one of the following authorities: • Ownership of the plan • BIND privilege on the plan • BINDAGENT privilege from the owner of the plan • SYSADM or SYSCTRL or System DBADM authority
REBIND PLAN with no change in ownership, although the original owner is specified for the OWNER keyword.	The authorization IDs of the process must have one of the following authorities: • OWNER *authorization-id* must be one of the primary or secondary authorization IDs of the binder • BINDAGENT privilege from the owner of the plan • SYSADM or SYSCTRL or System DBADM authority

© Copyright IBM Corp. 1983, 2024

Table 20. Summary of privileges for REBIND PLAN (continued)

Option	Authorization required to run REBIND PLAN
REBIND PLAN with change of ownership. (An authorization ID that is not the original owner is specified in the OWNER keyword.)	The new OWNER must have one of the following authorities: • BIND privilege on the plan • SYSADM or SYSCTRL or System DBADM authority If any of the authorization IDs or roles of the process has SYSADM authority, SYSCTRL authority, or system DBADM authority, OWNER *authorization-id* can be any value, when subsystem parameter SEPARATE_SECURITY is set to NO. If any of the authorization IDs has the BINDAGENT privilege granted from the owner, *authorization-id* can specify the grantor as OWNER. Otherwise, the OWNER *authorization-id* must be one of the primary or secondary authorization IDs of the binder. If you specify OWNER *authorization-id* , Db2 first checks the OWNER and then the binder for the necessary bind privilege. If the binder does not have SYSADM, SYSCTRL, or system DBADM authority, the authorization ID or role of the OWNER must have one of the following to add a new package or new version of an existing package to a collection: • The BINDADD system privilege and either the CREATE IN privilege or PACKADM authority on the collection or on all collections • SYSADM, SYSCTRL, or system DBADM authority
COLLID, specifying (*), indicating all packages in the collection	You do not need any authorization privileges for this option.
COLLID, specifying individual packages	Authorization ID of the process must include one of the following authority: • CREATEIN privilege on the COLLID you specified.
PKLIST, specifying individual packages	Authorization ID of the process must include one of the following authorities: • EXECUTE privilege on each package specified in the PKLIST • PACKADM authority on specific collections containing packages or on collection * • SYSADM or DATAACCESS authority
PKLIST, specifying (*), indicating all packages in the collection	Authorization ID of the process must include one of the following authorities: • EXECUTE privilege on *collection-id* .* • PACKADM authority on *collection-id* or on * • SYSADM or DATAACCESS authority

Syntax

```
REBIND PLAN ( plan-name [,] | * ) [ COLLID(*) | COLLID( collection-id ) ]
  [ OWNER( authorization-id ) ] [ QUALIFIER( qualifier-name ) ] [ enable-block ]
  [ pklist-block ] [ NODEFER(PREPARE) | DEFER(PREPARE) ] [ ACQUIRE( USE | ALLOCATE ) ]
  [ CACHESIZE( decimal-value ) ] [ CURRENTDATA( NO | YES ) ]
  [ CURRENTSERVER( location-name ) ] [ DBPROTOCOL( DRDA ) ]
  [ DEGREE( 1 | ANY ) ]
  [ DISCONNECT( EXPLICIT | AUTOMATIC | CONDITIONAL ) ]
  [ DYNAMICRULES( RUN | BIND ) ]
  [ ENCODING( ASCII | EBCDIC | UNICODE | ccsid ) ] [ EXPLAIN( NO | YES ) ]
  [ FLAG( I | W | E | C ) ] [ IMMEDWRITE( NO | YES ) ]
  [ ISOLATION( RR | RS | CS | UR ) ] [ KEEPDYNAMIC( NO | YES ) ]
  [ REOPT( NONE[1] | ALWAYS[2] | ONCE | AUTO ) ] [ OPTHINT(' hint-id ') ]
  [ PATH( schema-name [,] | USER ) ] [ PATHDEFAULT[3] ]
  [ RELEASE( COMMIT | DEALLOCATE ) ]
  [ ROUNDING( CEILING | DOWN | FLOOR | HALFDOWN | HALFEVEN | HALFUP | UP ) ] [ SQLRULES( DB2 | STD ) ]
  [ VALIDATE( RUN | BIND ) ]
  [ CONCURRENTACCESSRESOLUTION( USECURRENTLYCOMMITTED | WAITFOROUTCOME ) ]
  [ PROGAUTH( DISABLE | ENABLE ) ]
```

Notes:

[1] REOPT(VARS) can be specified as a synonym of REOPT(ALWAYS)

[2] NOREOPT(VARS) can be specified as a synonym of REOPT(NONE)
[3] The PATHDEFAULT keyword cannot be specified with the PATH keyword.

enable-block

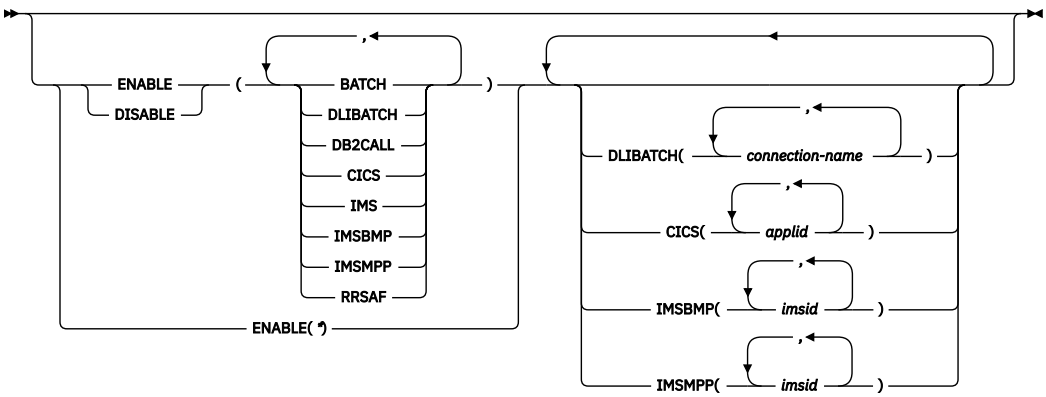

pklist-block

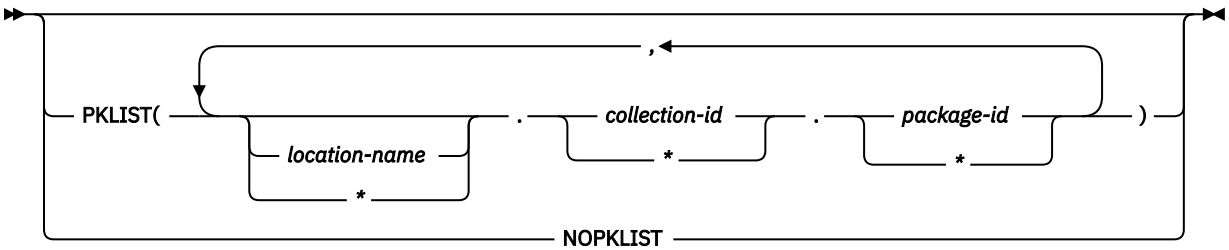

Descriptions for REBIND PLAN

(*plan-name*)
Specifies the name of the application plan to rebind, as stored in the NAME column in SYSPLAN catalog table (Db2 SQL).

(*)
Rebinds all plans for which the applicable authorization ID has the BIND privilege. The applicable authorization ID is:

- The value of OWNER, if you specify it. See "OWNER bind option" on page 134.
- The authorization ID of the process running the bind, if you specify the OWNER option.

Other options for REBIND PLAN

For descriptions of the options shown in the syntax diagram, see the topic Chapter 14, "BIND and REBIND options for packages, plans, and services ," on page 81.

Usage notes

Rebinding multiple plans
If you rebind multiple plans, Db2 commits each successful rebind before rebinding the next plan.

When you cannot rebind a plan
You cannot rebind a plan while that plan is executing.

Trace information for data sharing members
When this command with group scope is issued in a Db2 data sharing member, it also runs on all other active members. IFICID 090 trace records for other group members can show that the same command was issued by the SYSOPR authorization ID from the 016.TLPKN5F correlation ID,

in addition to the trace records from the member where the original command was issued. See Command scope in Db2 data sharing (Db2 Data Sharing Planning and Administration).

Examples

Example: Rebinding a plan to replace the package list

Suppose that PLANA uses package list COLLA.* Suppose that you want to replace that package list with COLLB.* Issue a command like this one:

```
REBIND PLAN (PLANA) -
  PKLIST(COLLB.*) -
  FLAG(W) -
  VALIDATE(BIND) -
  ISOLATION(CS)
```

This REBIND command also does the following things:

- Uses FLAG(W) to issue warning, error, and completion messages, but not informational messages.
- Uses VALIDATE(BIND) to point out any error conditions during the bind process.
- Uses ISOLATION(CS) to prevent other applications from changing the database values that this application uses only while the application is using them. This isolation level protects changed values until the application commits or terminates. In this example, the isolation is not set for the packages, so ISOLATION(CS) becomes the isolation level for the plan and the packages.
- Omits the OWNER keyword to leave the plan's owner authorization ID the same.
- Omits the ENABLE or DISABLE keywords to use the connections previously defined for the plan.

Related reference

REBIND PACKAGE subcommand (DSN)
The DSN subcommand REBIND PACKAGE rebinds an application package when you make changes that affect the package, but have not changed the SQL statements in the program.

BIND PLAN subcommand (DSN)
The DSN subcommand BIND PLAN builds an application plan. All Db2 programs require an application plan to allocate Db2 resources and support SQL requests made at run time.

BIND and REBIND options for packages, plans, and services
There are several options you can use for binding or rebinding packages, plans, and services. Some of the options are common for both BIND and REBIND operations.

Chapter 58. REBIND TRIGGER PACKAGE command (DSN)

The DSN subcommand REBIND TRIGGER PACKAGE rebinds a package for a basic trigger. You can identify basic triggers by querying the SYSIBM.SYSTRIGGERS catalog table. Blank values in the SQLPL column identify basic triggers. For advanced triggers, use the REBIND PACKAGE command instead.

You can use this subcommand to change a limited subset of the default bind options that Db2 used when creating the package. You might also rebind a trigger package to re-optimize its SQL statements after you create a new index or use the RUNSTATS utility. Additionally, you can rebind a trigger package if it has been marked invalid because an index, or another object it was dependent on, was dropped.

If the rebind is successful, the trigger package is marked valid. When the REBIND TRIGGER PACKAGE(*) command is issued, the only affected trigger packages are those for basic triggers that the issuer is authorized to rebind.

Trigger packages cannot be rebound remotely. The location name is permitted when specifying the package name on a REBIND TRIGGER PACKAGE subcommand. However, the location name must not refer to a remote location.

Environment

You can use REBIND TRIGGER PACKAGE through DB2I, or enter the REBIND TRIGGER PACKAGE subcommand from a DSN session that is running in foreground or background.

Data sharing scope: Group

Authorization

To build a package without producing error messages, the package owner must have authorization to execute **all** SQL statements that are embedded in the package for REBIND TRIGGER PACKAGE.

To execute this subcommand, you must use a privilege set of the process that includes one of the following privileges or authorities:

- Ownership of the trigger package
- BIND privilege on the trigger package
- BINDAGENT privilege from the owner of the trigger package
- PACKADM authority on the collection or on all collections
- System DBADM authority
- SYSCTRL authority
- SYSADM authority

When the trigger package is bound, the privileges of the current authorization ID are used when checking authority to bind statements within the triggered action. On REBIND TRIGGER PACKAGE, you need one of the following privileges or authorities:

- Ownership of the trigger package
- BIND privilege on the trigger package
- BINDAGENT privilege from the owner of the trigger package
- PACKADM authority on the collection or on all collections
- System DBADM authority
- SYSCTRL authority
- SYSADM authority

© Copyright IBM Corp. 1983, 2024

When the EXPLAIN(ONLY) the option is specified, you must have the EXPLAIN privilege.

Syntax

```
REBIND TRIGGER PACKAGE
  ( [ location-name . ] { collection-id | * } . { package-id | * } )
  options-block
    [ CURRENTDATA( { NO | YES } ) ]
    [ DESCSTAT( { NO | YES } ) ]
    [ EXPLAIN( { YES | NO | ONLY } ) ]
    [ FLAG( { I | W | E | C } ) ]
    [ IMMEDWRITE( { NO | YES } ) ]
    [ ISOLATION( { RR | RS | CS | UR | NC } ) ]
    [ RELEASE( { COMMIT | DEALLOCATE } ) ]
    [ SWITCH( { PREVIOUS | ORIGINAL } ) ]
    [ CONCURRENTACCESSRESOLUTION( { USECURRENTLYCOMMITTED | WAITFOROUTCOME } ) ]
    [ BUSTIMESENSITIVE( { YES | NO } ) ]
    [ SYSTIMESENSITIVE( { YES | NO } ) ]
    [ ARCHIVESENSITIVE( { YES | NO } ) ]
    [ APPLCOMPAT( { function-level | V11R1 | V10R1 } ) ]
```

options-block

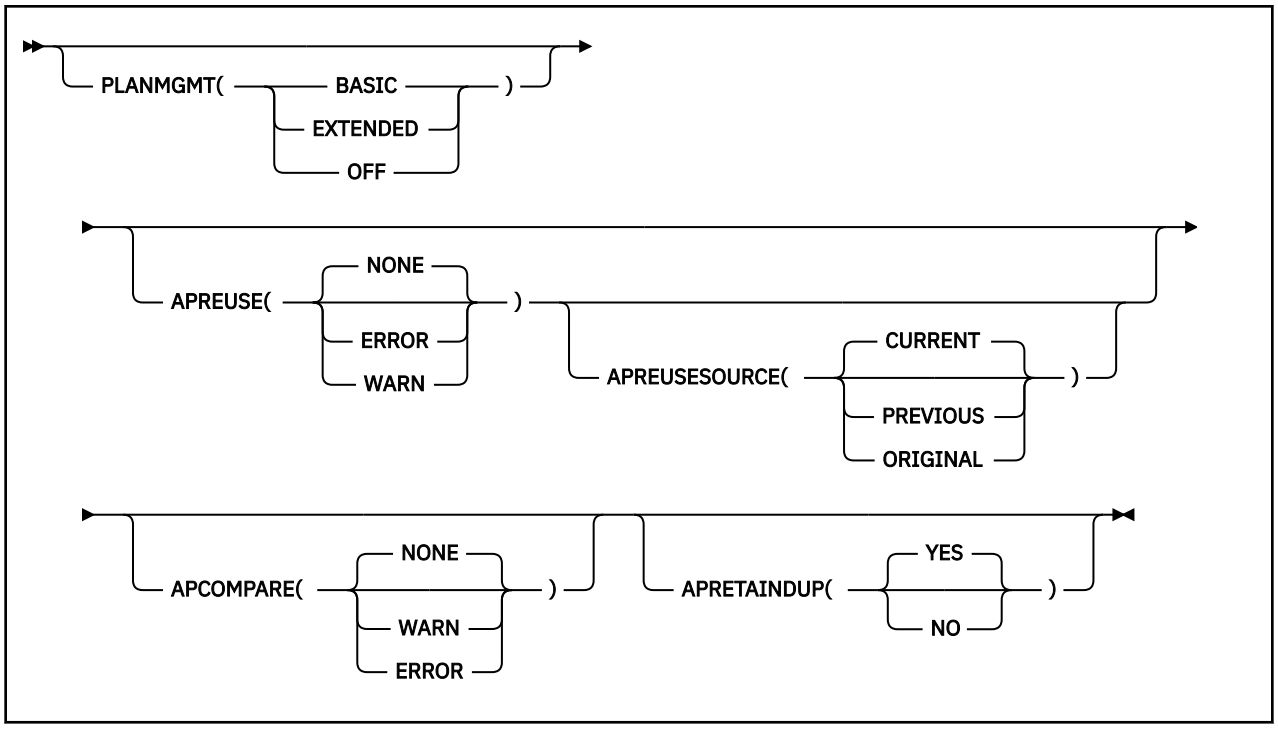

Option descriptions

TRIGGER PACKAGE

Determines what trigger package or packages to rebind. The trigger package must be associated with a basic trigger.

The following options identify the location, collection, and package name of the package. You can identify a location and collection. For REBIND TRIGGER PACKAGE, you must identify a trigger package name.

location-name

Identifies the current local location. Remote rebind of a trigger package is not allowed. *location-name* is the location of the DBMS where the package rebinds and where the description of the package resides.

The **default** is the local DBMS.

***collection-id* or ***

Identifies the schema-name that already contains the trigger package to rebind. No default exists.

For REBIND TRIGGER, you can use an asterisk (*) to rebind all local packages with the specified *package-id* in all the collections for which you have bind privileges.

***package-id* or ***

Identifies the name of the trigger package to rebind, as listed in the NAME column of the SYSPACKAGE catalog table. No default exists.

You can use the pattern-matching character (*) to rebind all local triggers in *collection-id* for which you have bind privileges.

For descriptions of the options that are shown in the syntax diagram, see the topic Chapter 14, “BIND and REBIND options for packages, plans, and services ,” on page 81.

Usage notes

Restrictions on trigger packages

A trigger package can be explicitly rebound, but it cannot be explicitly bound using the BIND PACKAGE subcommand.

A trigger package cannot be explicitly freed using the FREE PACKAGE subcommand or the DROP PACKAGE statement. Use the DROP TRIGGER statement to delete the trigger package.

A trigger package cannot be copied, and it can only be rebound locally. Remote rebind of a trigger package is not allowed.

Rebinding multiple trigger packages

If you rebind multiple trigger packages, Db2 commits each successful rebind before rebinding the next package.

Restriction on trigger names

Although DBCS characters are generally allowed in trigger names, trigger names that contain DBCS characters cannot be used in REBIND TRIGGER PACKAGE operations.

Trace information for data sharing members

When this command with group scope is issued in a Db2 data sharing member, it also runs on all other active members. IFICID 090 trace records for other group members can show that the same command was issued by the SYSOPR authorization ID from the 016.TLPKN5F correlation ID, in addition to the trace records from the member where the original command was issued. See Command scope in Db2 data sharing (Db2 Data Sharing Planning and Administration).

Output

REBIND TRIGGER PACKAGE updates the COLLID and NAME columns in the SYSPACKAGE catalog table.

Example

Enter the following command to rebind trigger package TRIG1 in the ADMF001 collection of packages:

```
REBIND TRIGGER PACKAGE (ADMF001.TRIG1);
```

This command produces output that is similar to the following output:

```
DSNT254I - DSNTBRB2 REBIND OPTIONS FOR
           PACKAGE = STLEC1.ADMF001.TRIG1.()
           ACTION
           OWNER         ADMF001
           QUALIFIER     ADMF001
           VALIDATE      BIND
           EXPLAIN       NO
           ISOLATION     CS
           RELEASE       COMMIT
           COPY
DSNT255I - DSNTBRB2 REBIND OPTIONS FOR
           PACKAGE = STLEC1.ADMF001.TRIG1.()
           SQLERROR      NOPACKAGE
           CURRENTDATA   YES
           DEGREE        1
           DYNAMICRULES  BIND
           NODEFER       PREPARE
           REOPT         NONE
           KEEPDYNAMIC   NO
           DBPROTOCOL    DRDA
           QUERYOPT      1
           PATH
"SYSIBM","SYSFUN","SYSPROC","SYSADM","ADMF001"
DSNT232I - SUCCESSFUL REBIND FOR
           PACKAGE = STLEC1.ADMF001.TRIG1.()
```

Related concepts

Package copies for plan management (Db2 Performance)

Related reference

BIND and REBIND options for packages, plans, and services

There are several options you can use for binding or rebinding packages, plans, and services. Some of the options are common for both BIND and REBIND operations.

CREATE TRIGGER statement (basic trigger) (Db2 SQL)

Chapter 59. -RECOVER BSDS command (Db2)

The Db2 command RECOVER BSDS reestablishes dual bootstrap data sets (BSDS) after one has been disabled by a data set error.

Follow these steps to reestablish dual BSDS mode:

1. Use access method services to rename or delete the failing BSDS, which the Db2 system has deallocated, and define a new BSDS with the same name as the failing BSDS. You can find control statements in job DSNTIJIN.
2. Issue the Db2 command RECOVER BSDS to make a copy of the remaining BSDS in the newly allocated data set and to reestablish dual BSDS mode.

Abbreviation: -REC BSDS

Environment

This command can be issued from a z/OS console, a DSN session, a DB2I panel (DB2 COMMANDS), an IMS or CICS terminal, or a program using the instrumentation facility interface (IFI).

Data sharing scope: Member

Authorization

To execute this command, you must use a privilege set of the process that includes one of the following privileges or authorities:

- BSDS privilege
- SYSCTRL authority
- SYSADM authority

Db2 commands that are issued from a logged-on z/OS console or TSO SDSF can be checked by Db2 authorization using primary and secondary authorization IDs. A logged-on z/OS user ID must be defined in RACF or a similar security server.

Syntax

```
►►─ RECOVER BSDS ─►◄
```

Example

Reestablish dual BSDS mode.

```
-RECOVER BSDS
```

Related tasks

Adding a second BSDS (Db2 Installation and Migration)

Recovering the BSDS from a backup copy (Db2 Administration Guide)

© Copyright IBM Corp. 1983, 2024

Chapter 60. -RECOVER INDOUBT command (Db2)

The Db2 command RECOVER INDOUBT recovers threads that are left in an indoubt state because Db2 or a transaction manager could not automatically resolve the indoubt status with the commit coordinator.

This command should only be used when automatic resolution will not work. The commit coordinator must determine the commit or abort decision.

Abbreviation: -REC IND

Environment

This command can be issued from a z/OS console, a DSN session, a DB2I panel (DB2 COMMANDS), an IMS or CICS terminal, or a program using the instrumentation facility interface (IFI).

Data sharing scope: Member

Authorization

To execute this command, you must use a privilege set of the process that includes one of the following privileges or authorities:

- RECOVER privilege
- System DBADM authority
- SYSOPR authority
- SYSCTRL authority
- SYSADM authority

Db2 commands that are issued from a logged-on z/OS console or TSO SDSF can be checked by Db2 authorization using primary and secondary authorization IDs. A logged-on z/OS user ID must be defined in RACF or a similar security server.

Syntax

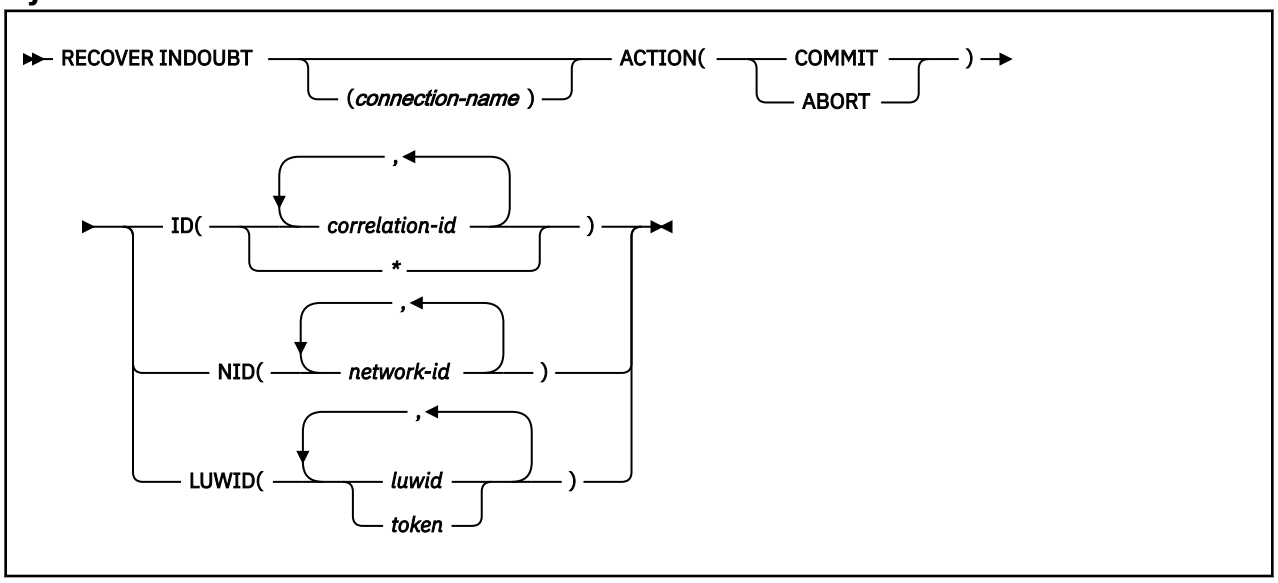

© Copyright IBM Corp. 1983, 2024

Option descriptions

(*connection-name*)
Specifies a one- to eight-character connection name. Allied threads (including those that are distributed) that belong to the connection name are recovered. This parameter is ignored if LUWID is specified.

The **default** is the connection name from which you enter the command. If you enter this command from a z/OS console, and you are recovering an allied thread using the ID or NID parameter, you **must** supply a connection name; no default connection name is available.

ACTION
Specifies whether to commit or abort the indoubt thread. If there are any downstream participants for which the local thread is the coordinator, the commit or abort decision is propagated to these participants.

Abbreviation: ACT

(COMMIT)
Commits the thread.

(ABORT)
Aborts the thread.

ID(*correlation-id* , ...)
Specifies whether to recover a specific allied thread or all allied threads (including those that are distributed) that are associated with the connection name.

correlation-id
Is the correlation ID (1 to 12 characters) of a specific thread that is to be recovered. If you use more than one correlation ID, separate the IDs with commas.

Do not use a correlation ID that is associated with more than one network ID. Instead, use the NID option.

(*)
Recovers all indoubt threads that are associated with the connection name. Even threads that have the same correlation ID are resolved.

NID(*network-id* , ...)
Specifies the network IDs of threads to recover.

network-id is a network ID that is associated with an individual thread. A single connection might have multiple network IDs associated with it. *network-id* is one of the following types of IDs:

- For IMS and CICS connections, *network-id* is specified as *net-node.number*:

  net-node
  The network node name of the system that originated the unit of work. *net-node* is one to eight bytes in length.

  number
  A unique number within the system of origin. *number* is 1 to 16 bytes in length.

- For RRSAF connections, *network-id* is the z/OS RRS unit of recovery ID (URID) that is used to uniquely identify a unit of work. A z/OS RRS URID is a 32-byte number.

The network ID appears in the recovery log of the commit coordinator as a 16-byte unique identification of a unit of work.

- For IMS and CICS connections, the network ID is an 8-byte node name immediately followed by an 8-byte number.
- For RRSAF connections, the network ID is a 16-byte number.

LUWID
Recovers the indoubt thread that has the specified LUWID.

luwid

Consists of an LU network name, an LUW instance number, and a commit sequence number.

The LU network name consists of a one- to eight-character network ID, a period, and a one- to eight-character network LU name. The LUW instance number consists of a period followed by 12 hexadecimal characters. The last element of the LUWID is the commit sequence number of 4 hexadecimal characters, preceded by a period.

token

A token is an alternate way to express an LUWID. Db2 assigns a token to each thread that it creates. It is a one- to six-digit decimal number that appears after the equal sign in all Db2 messages that display a LUWID.

If you enter one- to six-decimal digits, Db2 assumes that you are supplying a token. The token that Db2 assigns to a specific LUWID is unique for that Db2 subsystem, but not necessarily unique across all subsystems.

Usage note

When to use a network ID: A *network-id* is not normally needed, because a *correlation-id* can identify indoubt threads. However, if the *correlation-id* is not unique, *network-id* must be used. You do not need a *network-id* if you specify a LUWID.

If you specify a thread in the command that is part of a global transaction, the command is executed against all threads that are in the global transaction.

Examples

Example 1: Recover indoubt allied threads. Schedule a commit for all threads that are associated with the connection name from which the command is entered.

```
-RECOVER INDOUBT ACTION(COMMIT) ID(*)
```

Example 2: Recover an indoubt thread from a remote requester. Schedule a commit for the indoubt thread whose token is 1332.

```
-RECOVER INDOUBT ACTION(COMMIT) LUWID(1332)
```

Example 3: Recover indoubt threads from remote requesters. Schedule an abort for two indoubt threads. The first thread has an LUWID of DB2NET.LUNSITE0.A11A7D7B2057.0002. (The 0002 in the last segment of the LUWID represents the commit sequence number.) The second thread has a token of 442.

```
-RECOVER INDOUBT ACTION(ABORT)
         LUWID (DB2NET.LUNSITE0.A11A7D7B2057.0002, 442)
```

Chapter 61. -RECOVER POSTPONED command (Db2)

The Db2 command RECOVER POSTPONED completes back-out processing for units of recovery that are left incomplete during an earlier restart (POSTPONED ABORT units of recovery). Use this command when automatic resolution is not selected.

Abbreviation: -REC POST

Environment

This command can be issued from a z/OS console, a DSN session, a DB2I panel (DB2 COMMANDS), or an IMS or CICS terminal.

Data sharing scope: Member

Authorization

To execute this command, you must use a privilege set of the process that includes one of the following privileges or authorities:

- RECOVER privilege
- System DBADM authority
- SYSOPR authority
- SYSCTRL authority
- SYSADM authority

Db2 commands that are issued from a logged-on z/OS console or TSO SDSF can be checked by Db2 authorization using primary and secondary authorization IDs. A logged-on z/OS user ID must be defined in RACF or a similar security server.

Syntax

```
►► RECOVER POSTPONED ──┬──────────┬──►◄
                       └─ CANCEL ─┘
```

Option descriptions

CANCEL

Specify to stop Db2 processing of all postponed abort units of recovery immediately. Canceling postponed abort units of recovery leaves objects in an inconsistent state.

Objects that the postponed units of recovery modify are recovered (backed out). If back out processing fails, the objects are marked as REFRESH PENDING (REFP) and either RECOVER PENDING (RECP) or REBUILD PENDING (RBDP or PSRBD) in the database exception table. Resolve the REFP status of the object by running the RECOVER utility to recover the object to a prior point in time or by running LOAD REPLACE on the object.

Usage notes

Recovery action: Recovery (rollback) action is always taken for all POSTPONED ABORT units of recovery.

Output

The output from RECOVER POSTPONED consists of informational messages only.

© Copyright IBM Corp. 1983, 2024

Progression of RECOVER POSTPONED: Message DSNI024I indicates the completion of backout work against the page set or partition, and the removal of the page set or partition from the restart-pending status.

If backout processing lasts for an extended period of time, progress message DSNR047I is displayed at periodic intervals until backout processing is complete.

Db2 issues message DSN9022I after successful completion of the RECOVER POSTPONED command, or message DSN9023I if the command completed unsuccessfully. Message DSNV434I indicates that RECOVER POSTPONED was issued when no postponed-abort units of recovery needed to be resolved.

Example

Enter the following command to recover postponed-abort units of recovery.

```
-RECOVER POSTPONED
```

If postponed-abort units of recovery are found, output that is similar to the following output is generated:

```
DSNV435I - RESOLUTION OF POSTPONED ABORT URS HAS BEEN SCHEDULED
DSNI024I - DSNIARPL BACKOUT PROCESSING HAS COMPLETED
        FOR PAGESET DBKD0103.IPKD013A PART 00000004.
DSNI024I - DSNIARPL BACKOUT PROCESSING HAS COMPLETED
        FOR PAGESET DBKD0103.TPKD0103 PART 00000004.
DSNI024I - DSNIARPL BACKOUT PROCESSING HAS COMPLETED
        FOR PAGESET DBKD0103.IXKD013C PART (n/a).
DSNI024I - DSNIARPL BACKOUT PROCESSING HAS COMPLETED
        FOR PAGESET DBKD0103.IUKD013B PART (n/a).
DSNI024I - DSNIARPL BACKOUT PROCESSING HAS COMPLETED
        FOR PAGESET DBKD0103.IPKD013A PART 00000002.
DSNI024I - DSNIARPL BACKOUT PROCESSING HAS COMPLETED
        FOR PAGESET DBKD0103.TPKD0103 PART 00000002.
DSNI024I - DSNIARPL BACKOUT PROCESSING HAS COMPLETED
        FOR PAGESET DBKD0101.IXKD011C PART (n/a).
DSNI024I - DSNIARPL BACKOUT PROCESSING HAS COMPLETED
        FOR PAGESET DBKD0101.IXKD011B PART (n/a).
DSNI024I - DSNIARPL BACKOUT PROCESSING HAS COMPLETED
        FOR PAGESET DBKD0101.IUKD011A PART (n/a).
DSNI024I - DSNIARPL BACKOUT PROCESSING HAS COMPLETED
        FOR PAGESET DBKD0101.TLKD0101 PART (n/a).
DSN9022I - DSNVRP 'RECOVER POSTPONED' NORMAL COMPLETION
```

If no postponed units of recovery are found, the following output is returned:

```
DSNV434I - DSNVRP NO POSTPONED ABORT THREADS FOUND
DSN9022I - DSNVRP 'RECOVER POSTPONED' NORMAL COMPLETION
```

Related tasks

Resolving postponed units of recovery (Db2 Administration Guide)

Recovering from an error during RECOVER POSTPONED processing (Db2 Administration Guide)

Deferring restart processing (Db2 Administration Guide)

Chapter 62. -REFRESH DB2,EARLY command (Db2)

The Db2 command -REFRESH DB2,EARLY reloads the ERLY code modules that were loaded at IPL time, and rebuilds the ERLY control block.

Executing the -REFRESH DB2,EARLY command is an alternative to doing an IPL of z/OS for activating maintenance to early (ERLY) code after you apply that maintenance to the *prefix*.SDSNLINK data set.

When -REFRESH DB2,EARLY is run, previous copies of the ERLY modules are deleted from the system the next time that Db2 is started. This command is only valid when Db2 is inactive.

Restriction: The data set that contains the new ERLY code must have been in the link list concatenation since z/OS IPL time. -REFRESH DB2,EARLY does not search for ERLY code in data sets that were added to the link list after IPL time.

Important: If *prefix*.SDSNLINK is LLA-managed, you must perform an LLA refresh after you apply ERLY code maintenance, and before you issue the -REFRESH DB2,EARLY command. You can perform an LLA refresh by issuing the Db2 for z/OS command MODIFY LLA,REFRESH.

Abbreviation: -REF DB2

Environment

This command can be issued only from a z/OS console. In a non-data-sharing environment, the command must be issued on individual subsystems. In a data sharing environment, the command must be issued on individual members of a data sharing group. The name of the Db2 subsystem is determined by the command prefix. For example, -START indicates that the Db2 subsystem to be started is the one with '-' as the command prefix.

The command is rejected if the Db2 subsystem is already active. The ERLY code can be properly updated only when Db2 is not active.

Applications that use documented Db2 interfaces do not need to be stopped before issuing the REFRESH DB2,EARLY command.

Data sharing scope: Member

Authorization

None is required. However, the command can be executed only from a z/OS console with the START command capability. This command is rejected when Db2 is active, so no other authorization is required.

Syntax

```
►►─ -REFRESH DB2,EARLY ─►◄
```

Option descriptions

The following option is required.

EARLY
Indicates that the ERLY block is to be rebuilt, and that all of the modules that are loaded at IPL time are reloaded.

Scope of the -REFRESH command

The -REFRESH command has member-only scope, and must be executed for every instance where a unique recognition character for the -START command is defined.

© Copyright IBM Corp. 1983, 2024

After you issue the command, Db2 displays the maintenance levels of the ERLY code modules that were loaded.

Examples

Example: Refreshing the Db2 ERLY code

Suppose that the command prefix for a subsystem is -VC1A. This command reloads the ERLY code modules that were loaded at IPL time, and rebuilds the ERLY control block.

```
-VC1A REFRESH DB2,EARLY
```

After you issue the command, Db2 displays output like the following output:

```
DSN3100I -VC1A DSN3UR00 - SUBSYSTEM VC1A READY FOR START COMMAND
DSN3117I VC1A MAINTENANCE LEVELS
  CSECT     DATE      APAR        CSECT     DATE      APAR
  DSN3UR00  01/27/05  09.35       DSN3EC0X  01/24/05  09.10
  DSN3ECMS  01/13/05  11.16       DSN3RIB   12/13/04  10.46
  DSN3RDMP  12/13/04  10.27       DSNAET03  11/30/04  15.42
  DSNAET04  11/30/04  15.42       DSNAPRHO  11/30/04  15.42
  DSNAPRHX  12/20/04  10.10       DSNVRMTR  11/30/04  19.53
  DSNVRSRB  11/30/04  19.53       DSNZPARS  11/30/04  21.48
  DSN3AC0X  11/30/04  21.50       DSN3CL0X  11/30/04  21.51
  DSN3DEQ0  11/30/04  21.52       DSN3ENQ0  11/30/04  21.52
  DSN3EST0  11/30/04  21.53       DSN3RRSX  11/30/04  21.53
  DSN3RRXF  11/30/04  21.54       DSN3RS0X  11/30/04  21.54
  DSN3RTR0  11/30/04  21.54       DSN3SPRX  11/30/04  21.54
```

Related tasks

Choosing link list options (Db2 Installation and Migration)

Migration step 17: Refresh the z/OS definition of Db2 (Db2 Installation and Migration)

Related information

DSN3100I (Db2 Messages)

Chapter 63. -RESET GENERICLU command (Db2)

The RESET GENERICLU command allows you to purge information stored by VTAM in the coupling facility for one or more partners of a particular Db2 subsystem.

The command must be issued from the Db2 subsystem that has the VTAM affinity to the particular partner LU whose information you are purging.

Abbreviation: -RESET GENERIC

Environment

This command can be issued from a z/OS console, a DSN session under TSO, a DB2I panel (DB2 COMMANDS), an IMS or CICS terminal, or a program using the instrumentation facility interface (IFI).

Data sharing scope: Member

Authorization

To execute this command, you must use a privilege set of the process that includes one of the following authorities:

- SYSOPR authority
- SYSCTRL authority
- SYSADM authority

Db2 commands that are issued from a logged-on z/OS console or TSO SDSF can be checked by Db2 authorization using primary and secondary authorization IDs. A logged-on z/OS user ID must be defined in RACF or a similar security server.

Syntax

```
►► RESET GENERICLU ──┬──( ┌──,──┐ luname ──┬──┐ )──►◄
                     │   │       │ netid.luname │
                     │   └───────┘              │
                     └──────────(*)─────────────┘
```

Option descriptions

(*luname*)
Specifies the real VTAM LU name of the partner whose generic LU name mapping is to be purged. The NETID of this partner LU must be the same as the local Db2 NETID.

(*netid.luname*)
Specifies that the VTAM shared memory information that is associated with the specified NETID and LUNAME is purged.

(*)
Purges the VTAM shared memory information for all partners of this Db2 subsystem. This command option should only be used if you are planning to remove this Db2 subsystem from the Db2 group.

Usage notes

The following conditions must be satisfied for the RESET GENERICLU command to be successful:

- DDF must be started.

© Copyright IBM Corp. 1983, 2024

- No VTAM sessions can be active to the partner LU that is specified on the command.
- Db2 must not have any indoubt thread resolution information associated with the specified partner LU.

Examples

Example 1: Purge the VTAM generic name mapping that is associated with partner NET1.USER5LU.

```
-DB2A RESET GENERICLU(NET1.USER5LU)
```

Example 2: Purge the VTAM generic name mappings for all LUs that are partners of this Db2 subsystem. Use this version of the command only when removing this Db2 subsystem from the data sharing group.

```
-DB2A RESET GENERICLU(*)
```

Chapter 64. -RESET INDOUBT command (Db2)

The Db2 command RESET INDOUBT purges the information that is displayed in the indoubt thread report that is generated by the DISPLAY THREAD command.

When the DISPLAY THREAD TYPE(INDOUBT) command output shows a RESET value of YES, use the RESET INDOUBT command without the FORCE option to purge indoubt thread information for threads in the following situations:

- Threads in which the Db2 database manager has a coordinator role that it cannot fulfill because of participant cold start, sync point protocol errors, or indoubt resolution protocol errors.
- Threads that were indoubt but were resolved with the RECOVER INDOUBT command. Heuristic damage occurred during subsequent resynchronization with the coordinator.

When the DISPLAY THREAD TYPE(INDOUBT) command output shows a RESET value of null, use the RESET INDOUBT command with the FORCE option to purge indoubt thread information in the following situations:

- A Db2 database manager has a coordinator role. No errors occurred that preclude automatic resolution with the participants. Resynchronization with affected participants is not performed.
- A Db2 database manager has a participant role. No errors occurred that preclude automatic resolution with the coordinator. Resynchronization with the coordinator is not performed.

The DISPLAY THREAD TYPE(INDOUBT) command output must indicate a commit or abort decision before an entry can be purged.

Abbreviation: -RESET IND

Environment

This command can be issued from a z/OS console, a DSN session under TSO, a DB2I panel (DB2 COMMANDS), an IMS or CICS terminal, or a program using the instrumentation facility interface (IFI).

Data sharing scope: Member

Authorization

To execute this command, you must use a privilege set of the process that includes one of the following privileges or authorities:

- RECOVER privilege
- SYSOPR authority
- SYSCTRL authority
- SYSADM authority

Db2 commands that are issued from a logged-on z/OS console or TSO SDSF can be checked by Db2 authorization using primary and secondary authorization IDs. A logged-on z/OS user ID must be defined in RACF or a similar security server.

© Copyright IBM Corp. 1983, 2024

Syntax

```
►►─ RESET INDOUBT ─►
   ►─┬─ LUNAME( ─┬─ luname ─┬─ ) ─┬─ FORCE ─┬─►◄
     │           │   ,◄──┘   │     │         │
     │           └─ *        │     │         │
     ├─ LOCATION( ─ location-name ─ ) ─────────┤
     │              ,◄──┘                     │
     ├─ IPADDR( ─┬─ ipaddr..port ─┬─ ) ─┬─ FORCE ─┤
     │           │   ,◄──┘        │     │         │
     │           └─ *             │     │         │
     └─ LUWID( ─┬─ luwid ─┬─ ) ─┬─ LOCATION( location-name ) ─┘
                │   ,◄──┘   │     │
                └─ token    │     │
```

Option descriptions

LUNAME(*luname* , ...)

Purges all qualifying indoubt information that pertains to the specified LUNAME.

luname

Is expressed as a one- to eight-character name. If you use more than one LUNAME, separate each name with a comma.

(*)

Purges indoubt information for all SNA locations.

FORCE

Forces the purging of coordinator and participant indoubt resolution responsibility even when no errors that preclude automatic resolution have been detected. FORCE can be used in conjunction with IPADDR or LUNAME.

Purging resynchronization information when no errors that preclude automatic resynchronization have been detected simulates a cold start. Thus, no connections can exist between Db2 and the named partner when this command is executed. After you run the FORCE option, the next connection with the named partner location will be a cold start connection. If a connection with the named partner exists at the time this command is run, the command fails with message DSNL448I.

FORCE can be used to bypass warm start connectivity problems when errors that are occurring in the recovery log name exchange result in the partner refusing the connection attempt.

LOCATION(*location-name* , ...)

Purges all qualifying indoubt information that pertains to the named location.

location-name is expressed as a 1- to 39-character name, which identifies the partner, whether it is a requester or server. If the partner is not a Db2 for z/OS subsystem, the location name can be expressed as one of the following formats:

- A one- to eight-character luname, as defined to VTAM at the server location. This name must be enclosed in the less-than (<) and the greater-than (>) characters to distinguish it from a Db2 location name.
- A dotted decimal or colon hexadecimal IP address.

IPADDR(*ipaddr..port*)

Purges all qualifying indoubt information that pertains to the dotted decimal or colon hexadecimal IP address that is associated with the resync port number.

This keyword can be used in place of the LUNAME keyword when the partner uses TCP/IP instead of SNA.

ipaddr..port

Is the dotted decimal or colon hexadecimal IP address of the remote site, followed by the resync port number. The IP address and port must be delimited by a double period (..). If you use more than one IP address and port number, use commas to separate the items in the list.

(*)

Purges indoubt information for all TCP/IP locations.

LUWID

Purges indoubt information for the thread with the specified LUWID.

luwid

Consists of an LU network name, an LUW instance number, and a commit sequence number.

The LU network name consists of a 1- to 8-character network ID, a period, and a 1- to 8-character network LU name. The LUW instance number consists of a period followed by 12 hexadecimal characters. The last element of the LUWID is the commit sequence number, which consists of a period followed by four hexadecimal characters.

token

A token is an alternate way to express an LUWID. Db2 assigns a token to each thread that it creates. It is a one- to six-digit decimal number that appears after the equal sign in all Db2 messages that display an LUWID.

If you enter one- to six-decimal digits, Db2 assumes that you are supplying a token. The token that Db2 assigns to a specific LUWID is unique for that Db2 subsystem, but it is not necessarily unique across all subsystems.

Output

The response from this command includes any of the messages from DSNL440I through DSNL449I.

If you specify RESET INDOUBT incorrectly, you receive message DSNL440I.

Usage notes

Purging participant indoubt information

Use caution when you specify the FORCE option to purge participant indoubt information. Normally, after the use of the RECOVER INDOUBT command, automatic resolution with the coordinator determines if heuristic damage has occurred. This detection is lost if RESET INDOUBT is used before automatic resolution with the coordinator can be achieved.

Purging coordinator indoubt information:

Use caution when you specify the FORCE option to purge coordinator indoubt information when no errors are precluding automatic resolution. When the information is purged, any participant that is indoubt is forced to use a heuristic decision process to resolve the indoubt logical unit of work.

Examples

GUPI

Resetting indoubt threads with IP address and resync port number

For example, assume that you issue a DISPLAY THREAD command with TYPE(INDOUBT), and the output includes the following DSNV406I message:

```
DSNV406I -DB2C INDOUBT THREADS -
COORDINATOR          STATUS      RESET URID                 AUTHID
```

```
FFFF:10.97.217.50.   COMMITTED-H YES   0000000056765A422C57 PAULMCW
.1332
```

You can issue the following command to reset the indoubt unit of work by specifying the IP address (FFFF:10.97.217.50) and the resync port number of the coordinator (1332) from the message:

```
RESET INDOUBT IPADDR(::FFFF:10.97.217.50..1332)
```

Resetting indoubt threads with LUWIDs or tokens

Assume that you need to purge information about two indoubt threads. The first has an LUWID of DB2NET.LUNSITE0.A11A7D7B2057.0002, and the second has a token of 442. You can use the following command to purge the information:

```
-RESET INDOUBT LUWID(DB2NET.LUNSITE0.A11A7D7B2057.0002,442)
```

GUPI

Related concepts

Monitoring threads with DISPLAY THREAD commands (Db2 Administration Guide)

Related tasks

Resetting the status of an indoubt thread (Db2 Administration Guide)

Related reference

-DISPLAY THREAD command (Db2)

The Db2 command DISPLAY THREAD displays current status information about Db2 threads.

Related information

DSNV406I (Db2 Messages)

Chapter 65. RUN subcommand (DSN)

The DSN subcommand RUN executes an application program, which can contain SQL statements.

Environment

This subcommand can be issued under the DSN command processor running in either foreground or background mode, or it can be issued by using the DB2I RUN panel.

Data sharing scope: Member

Authorization

To execute this command, you must use a privilege set of the process that includes one of the following privileges or authorities:

- EXECUTE privilege on the plan
- Ownership of the plan
- SYSADM authority

To run an application, the plan must be enabled for your local server. Any associated packages from which you execute statements must also be enabled.

Syntax

```
►► RUN ──┬─ PROGRAM( program-name ) ──┬──────────────────────────┬──►
         │                            └─ PLAN(plan-name ) ───────┘  │
         └──────────────── CP ── PLAN(plan-name ) ────────────────┘

►┬──────────────────────────┬──┬──────────────────────────────────┬►◄
 └─ LIBRARY( library-name ) ─┘  └─ PARMS( parameter-string ) ───────┘
```

Option descriptions

Use at least one of the two following clauses, but do not use the same clause twice.

PROGRAM (*program-name*)
Identifies the program that you want to run.

CP
Directs input to the user's command processor, and causes a prompt to be issued: `ENTER TSO COMMAND`. This is useful for running command processors and debugging programs (for example, COBTEST).

Processing the specified TSO command creates a new task control structure under which the TSO command executes. All application programs that are initiated from this TSO command session also execute under the same task structure, and must establish a new connection to Db2 if they use SQL requests.

When the TSO command completes, the new task structure is terminated, and control is returned to the original Db2 connection and task structure established by the DSN command.

Later TSO commands can be issued directly from the DSN session, or through the RUN subcommand with the CP option.

PLAN(*plan-name*)
Is optional after the PROGRAM option, but required after the CP option.

© Copyright IBM Corp. 1983, 2024

plan-name is the name of the application plan for the program.

When PROGRAM is used, the **default** plan name is *program-name* .

LIBRARY(*library-name*)
Specifies the name of the data set that contains the program to be run.

If *library-name* is not specified, normal z/OS library searching is used. The data sets that are specified in the STEPLIB DD statements are first searched for the entry point name of the program. If STEPLIB is not present, the data sets that are specified in the JOBLIB DD statements are searched. If the entry point name is not found there, the link list is searched.

Subprograms: Normal z/OS library searching is **always** used for any subprograms that is loaded by the main program. If the subprograms reside in the same library as the main program, the library-name must also be defined for the normal z/OS search pattern (STEPLIB, JOBLIB, link list). If a library that is defined in that way contains both the main program and any loaded subprograms, you do not need to use the LIBRARY option.

PARMS(*parameter-string*)
parameter-string is a list of parameters that are to be passed to your application program. Separate items in the list with commas, blanks, or both, and enclose the list between apostrophes. If the list contains apostrophes, represent each apostrophe by using two consecutive apostrophes. The list is passed as a varying-length character string of 1 to 100 decimal characters.

For Assembler: Use a list of the form 'program parameters'. There are no run time parameters.

No run time or application parameter validation is performed by the RUN subcommand on the *parameter-string* that is passed to your application program. All specified parameter values are assumed to adhere to the parameter syntax and format criteria defined by the language in which the application program is written.

For C: Use a list of the form A/B, where A represents a list of run time options, and B represents a list of parameters for the C application program. If run time options are not needed, write the list in the form /B. If the NOEXECOPS run time option is in effect, omit the "/".

For COBOL: If Language Environment is not the run time environment, use a list of the form B/A, where B represents a list of parameters for the COBOL application program, and A represents a list of run time options. If program parameters are not needed, write the list in the form of /A.

If Language Environment is the run time environment, use a list of the form A/B, where A represents a list of run time options, and B represents a list of parameters for the COBOL application program. If run time options are not needed, write the list in the form of /B. For compatibility, Language Environment provides the CBLOPTS run time option. When CBLOPT(YES) is specified in CEEDOPT or CEEUOPT and the main routine is COBOL, specify the list in the form of B/A, the same form as when the run time environment is not Language Environment. CBLOPT(NO) is the default.

For Fortran: Use a list of the form A/B, where A represents a list of Fortran run time options and B represents a list of parameters for the Fortran application program. If Fortran run time options are not needed, write the list in the form of B or /B. The second form must be used if a slash is present within the program arguments. If only Fortran run time options are present, write the list in the form of A/.

For PL/I: Use a list of the form A/B, where A represents a list of run time options, and B represents a list of parameters for the PL/I application program. If run time options are not needed, write the list in the form /B. If the PL/I NOEXECOPS procedure option is specified, omit the "/". An informational system message is issued if you omit the slash, or if the value that is passed to the PL/I run time package is not valid.

Usage note

Multitasking restriction: When running a program that uses a multitasking environment, the first task to issue an SQL statement must issue all subsequent SQL calls. That is, only one task in a multitasking environment can issue SQL calls. This task must be a subtask of, or running at the same TCB level as, the DSN main program.

Examples

Example 1: Run application program DSN8BC4. The application plan has the same name. The program is in library ' *prefix* .RUNLIB.LOAD'.

```
DSN SYSTEM (DSN)
RUN PROGRAM (DSN8BC4) LIB ('
prefix
.RUNLIB.LOAD')
```

Example 2: Run application program DSN8BP4. The application plan is DSN8BE81. The program is in library '*prefix*.RUNLIB.LOAD'. Pass the parameter O'TOOLE to the PL/I application program with no PL/I run time options. Because O'TOOLE contains an apostrophe, you need to double that apostrophe in the PARMS parameter value.

```
DSN SYSTEM (DSN)
RUN PROGRAM (DSN8BP4) PLAN (DSN8BE81) -
    LIB ('prefix.RUNLIB.LOAD') PARMS ('/O''TOOLE')
```

Chapter 66. -SET ARCHIVE command (Db2)

The Db2 command SET ARCHIVE sets the maximum number of tape units for the archive log. It also sets the maximum deallocation time of tape units for the archive log.

This command overrides the values that are specified during installation or in a previous invocation of the SET ARCHIVE command. The changes that SET ARCHIVE makes are temporary; at restart, Db2 again uses the values that are set during installation.

Abbreviation: -SET ARC

Environment

This command can be issued from a z/OS console, a DSN session under TSO, a DB2I panel (DB2 COMMANDS), an IMS or CICS terminal, or a program using the instrumentation facility interface (IFI).

Data sharing scope: Member

Authorization

To execute this command, you must use a privilege set of the process that includes one of the following privileges or authorities:

- ARCHIVE privilege
- SYSOPR authority
- SYSCTRL authority
- SYSADM authority

Db2 commands that are issued from a logged-on z/OS console or TSO SDSF can be checked by Db2 authorization using primary and secondary authorization IDs. A logged-on z/OS user ID must be defined in RACF or a similar security server.

Syntax

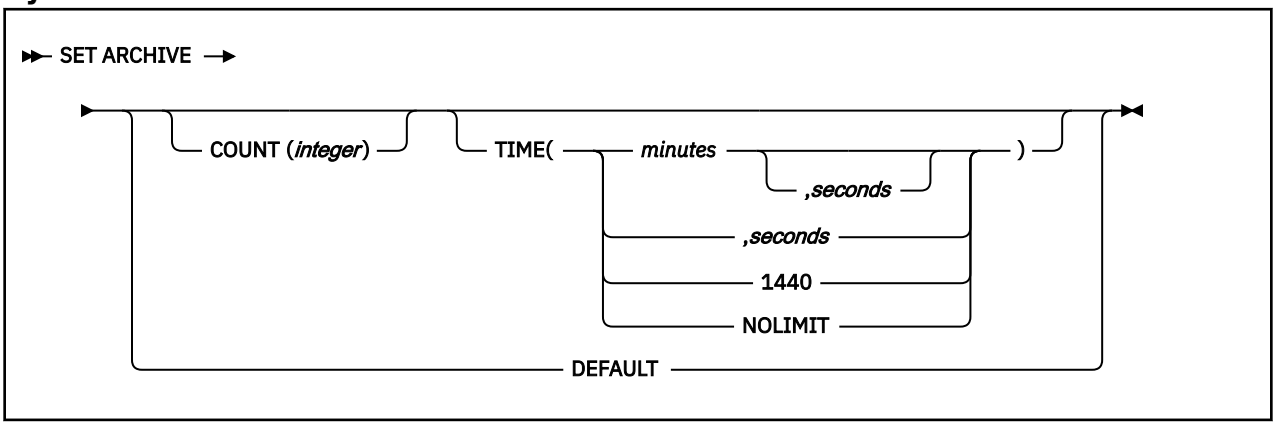

Option descriptions

The following options override the READ TAPE UNITS(COUNT) and DEALLC PERIOD TIME subsystem parameters that are specified during installation.

COUNT(*integer*)

Specifies the maximum number of tape units that can be dedicated to reading archive logs. This value affects the number of concurrent reads that are allowed for unique archive data sets that reside on tapes.

integer can range 1–99.

© Copyright IBM Corp. 1983, 2024

- If the number that you specify is greater than the current specification, the maximum number of tape units allowable for reading archive logs increases.
- If the number that you specify is less than the current specification, tape units that are not being used are immediately deallocated to adjust to the new COUNT value. Active (or premounted) tape units remain allocated; only tape units that are inactive are candidates for deallocation because of a lowered COUNT value.

TIME
Specifies the length of time during which an allocated archive read tape unit is allowed to remain unused before it is deallocated.

(*minutes*)
Specifies the maximum number of minutes.

minutes must be an integer in the range 0–1439.

(*seconds*)
Specifies the maximum number of seconds.

seconds must be an integer in the range 1–59.

(NOLIMIT) or (1440)
Indicates that the tape unit will never be deallocated. Specifying TIME(1440) is equivalent to TIME(NOLIMIT). The seconds specification is not allowed when you specify that TIME is 1440.

DEFAULT
Resets the COUNT and TIME parameters back to the values that were specified during Db2 installation.

Usage notes

Archive tape reading performance: To achieve the best performance for reading archive tapes, specify the maximum values that are allowed (within system constraints) for both the COUNT and TIME options.

IEF238D "REPLY DEVICE NAME OR CANCEL" message: Replying "CANCEL" to this message resets the COUNT value to the current number of tape units. For example, if the current COUNT value is 10, but you reply "CANCEL" to the request for the seventh tape unit, the COUNT value is reset to 6.

Delaying tape deallocation in a data sharing environment: When you submit a recover job on a member of a data sharing group that requires a tape unit that must remain unused for a certain length of time before it is deallocated, the archive tape is not available to any other member of the group until the tape is deallocated. Unless all recover jobs will be submitted from the same member, you might not want to use the COUNT option and ensure that field DEALLOC PERIOD on installation panel DSNTIPA has a value of 0.

Output

The response from this command includes any of the messages from DSNJ334I through DSNJ337I.

Examples

Example 1: Allocate two tape units that can remain unused for 30 seconds before they are deallocated.

```
-SET ARCHIVE COUNT(2) TIME(,30)
```

Example 2: Allocate four tape units that can remain unused for 2 minutes before they are deallocated.

```
-SET ARCHIVE COUNT(4) TIME(2)
```

Example 3: Allocate one tape unit that is never deallocated.

```
-SET ARCHIVE COUNT(1) TIME(1440)
```

Chapter 67. -SET LOG command (Db2)

You can use the Db2 command SET LOG to modify checkpoint frequency, to suspend or resume logging, or to add a new active log.

The Db2 command SET LOG modifies the checkpoint frequency that is specified during installation. This command also overrides the value that was specified in a previous invocation of the SET LOG command.

The changes that SET LOG makes are temporary; at restart, Db2 uses the values that were used for restart. The LOGLOAD value takes effect following the next system checkpoint. You can use SET LOG to suspend or resume logging and update activity for the current Db2 subsystem. You can also use the NEWLOG option of SET LOG to add an active log to the configuration. Changes made by NEWLOG are pervasive.

Environment

This command can be issued from a z/OS console, a DSN session under TSO, a DB2I panel (DB2 COMMANDS), an IMS or CICS terminal, or a program that uses the instrumentation facility interface (IFI).

Data sharing scope: Member

Authorization

To execute this command, you must use a privilege set of the process that includes one of the following privileges or authorities:

- ARCHIVE privilege
- SYSOPR authority
- SYSCTRL authority
- SYSADM authority

Db2 commands that are issued from a logged-on z/OS console or TSO SDSF can be checked by Db2 authorization using primary and secondary authorization IDs. A logged-on z/OS user ID must be defined in RACF or a similar security server.

Syntax

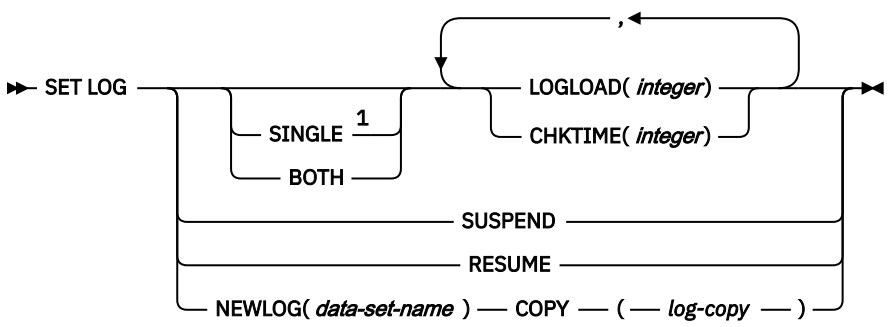

Notes:

[1] If you specify SINGLE, you must also specify LOGLOAD or CHKTIME.

Option descriptions

The following option overrides the LOGLOAD subsystem parameter that is specified in the CHECKPOINT FREQ field on installation panel DSNTIPN.

© Copyright IBM Corp. 1983, 2024

SINGLE

Specifies that only a single option, either LOGLOAD or CHKTIME, is used to control checkpoint frequency. If you specify SINGLE, you must specify LOGLOAD or CHKTIME.

SINGLE is optional. If you do not use this option, the existing mode, SINGLE or BOTH, is used. If you specify SINGLE but BOTH was previously in effect, the mode changes to SINGLE.

BOTH

Specifies that both LOGLOAD and CHKTIME are used control checkpoint frequency. The threshold that is reached first triggers a system checkpoint and resets both thresholds.

BOTH is optional. If you do not use this option, the existing mode, SINGLE or BOTH, is used. If you specify BOTH but SINGLE was previously in effect, the mode changes to BOTH and the input values for LOGLOAD and CHKTIME are used. If you do not specify LOGLOAD or CHKTIME, the existing value for the option not specified remains in effect. If the value for CHKTIME or LOGLOAD has not been set and the option is not specified in the SET LOG command, the default value for the parameter that is not specified is used.

If a SET LOG command changes SINGLE mode to BOTH, and that command does not specify CHKTIME, the default value for CHKTIME is 3 minutes.

LOGLOAD(*integer*)

Specifies the number of log records that Db2 writes between the start of successive checkpoints. You can specify a value of 0 to initiate a system checkpoint without modifying the current LOGLOAD value.

Possible values of *integer* are:

- 1000 to 16000000, if SINGLE is explicitly specified in the SET LOG command
- 0, or 1000 to 16000000, if SINGLE mode is in effect
- 0, or 1000 to 99999999, if BOTH is explicitly specified in the SET LOG command, or BOTH mode is in effect

The default value for LOGLOAD is 500000 log records.

If Db2 was previously running in SINGLE mode, CHKTIME was previously controlling checkpoints, and you specify a value greater than 0 for LOGLOAD, LOGLOAD controls future checkpoints, and CHKTIME is not used.

CHKTIME(*integer*)

Specifies the number of minutes between the start of successive checkpoints.

integer is any integer from 0 to 5. Specifying 0 starts a system checkpoint immediately without modifying the checkpoint frequency.

Possible values of *integer* are:

- 1 to 5, if SINGLE is explicitly specified in the SET LOG command
- 0 to 5, if SINGLE mode is in effect
- 0 to 5, if BOTH is explicitly specified in the SET LOG command, or BOTH mode is in effect

If Db2 was previously running in SINGLE mode, LOGLOAD was previously controlling checkpoints, and you specify a value greater than 0 for CHKTIME, CHKTIME controls future checkpoints, and LOGLOAD is not used.

SUSPEND

Specify to suspend logging and update activity for the current Db2 subsystem until SET LOG RESUME is issued. Db2 externalizes unwritten log buffers, takes a system checkpoint (in non-data-sharing environments), updates the BSDS with the high-written RBA, and then suspends the update activity. Message DSNJ372I is issued and remains on the console until update activity resumes.

SUSPEND quiesces the writes for 32-KB pages and the data set extensions for all page sizes. If a 32-KB page write is in progress when you take volume-level copies of your data, SUSPEND prevents an inconsistent copy of a 32-KB page when the copy of your data is restored. If a data set extension is

in progress, SUSPEND prevents inconsistencies between the VSAM catalog and the Db2 data set when the copy of your data is restored.

This option is not allowed when the ARCHIVE LOG or STOP DB2 commands activate a system quiesce. Update activity remains suspended until SET LOG RESUME or STOP DB2 is issued. (Also, when logging is suspended, do not issue the ARCHIVE LOG command without also specifying CANCEL OFFLOAD.)

Recommendation: Do not keep log activity suspended during periods of high activity or for long periods of time. Suspending update activity can cause timing-related events such as lock timeouts or Db2 and IRLM diagnostic dumps.

RESUME
Specify to resume logging and update activity for the current Db2 subsystem and to remove the message DSNJ372I from the console. Resumes 32-KB page writes and data set extensions for pages of all sizes.

Recommendation: Issue this command from a z/OS console or from the installation SYSADM ID to avoid possible contention during command authorization checking. When logging is suspended by the SET LOG SUSPEND command, the contention that is generated by holding the log-write latch can cause command-authorization checking to hang until logging resumes.

NEWLOG(***data set name*** **)**
Adds a newly defined active log data set to the active log inventory. If Db2 can open the newly defined data set, the log is added to the active log inventory in the BSDS data sets and is immediately available for use without recycling Db2.

Before you issue this command, you must define the data set with IDCAMS.

Important: Ensure that each archive log data set is at least as large as your active log data sets. See Active log data sets storage requirements (Db2 Installation and Migration) for more information about requirements for active log data sets. Before you can add an active log data set that is greater that 4 GB, you must also activate function level 500 or higher.

Recommendation: Format the new active log data set with the DSNJLOGF utility before you issue the SET LOG command to add the data set to the active log inventory.

COPY(***log copy*** **)**
specifies the log copy number for the new active log data set.

The value of *log copy* can be 1 or 2. Specify 1 for copy 1 of the active log data set or 2 for copy 2 of the active log data set.

Recommendation: If Db2 is in dual logging mode, add log data sets for both copy 1 and copy 2 of the new active log data set.

Usage notes

How LOGLOAD and CHKTIME values affect Db2 performance: LOGLOAD and CHKTIME values can affect the amount of time needed to restart Db2 after abnormal termination. A large value for either option can result in lengthy restart times. A low value can result in Db2 taking excessive checkpoints. However, when you specify LOGLOAD(0) or CHKTIME(0), the checkpoint request is synchronous when issued from a batch job, and it is asynchronous when issued from a z/OS or TSO console.

The behavior of LOGLOAD(0) and CHKTIME(0) is different in a data sharing environment. Avoid issuing SET LOG LOGLOAD(0) or SET LOG CHKTIME(0) in the data sharing environment if logging has been suspended with SET LOG SUSPEND on any member in the group. If you specify LOGLOAD(0) or CHKTIME(0), the synchronous checkpoint might be suspended until all logging has been resumed when you issue the SET LOG RESUME command.

Use the DISPLAY LOG command to display the current checkpoint parameters. You can see if CHKTIME, LOGLOAD, or both are being used to schedule checkpoints.

The value that you specify for LOGLOAD or CHKTIME is reset to the value specified in the subsystem parameter when Db2 is restarted. If you load a different value by issuing the command SET SYSPARM, the new value is used.

When to suspend logging: Specify SET LOG SUSPEND before making a remote copy of the entire database and logs for a system-level, point-in-time recovery or disaster recovery. You can make remote copies with peer-to-peer remote recovery (PPRC) and FlashCopy®. Suspending logging to make a remote copy of the database lets you avoid quiescing update activity. Read-only activity continues while logging is suspended.

The backup that is made between the SET LOG SUSPEND and the SET LOG RESUME window might contain uncommitted data. If you must restore the entire Db2 subsystem to the time when the log was suspended, restore the entire database and logs from the backup, and then restart Db2 to recover the entire Db2 subsystem to a consistent state.

Avoiding deadlocks when using SET LOG SUSPEND in a data sharing environment: To avoid deadlock in a data sharing environment, issue the SET LOG SUSPEND command on one data sharing member first, wait until it completes, and then issue the command for the remaining members.

Order in which newly defined active log data sets are used: Currently, if you do not stop and start Db2 during the period after you add new active log data sets to the inventory and before Db2 uses those active log data sets, Db2 uses the active log data sets in the reverse order from the order in which you add them to the active log inventory with the SET LOG command. For example, suppose that the active log inventory contains data sets DS01, DS02, and DS03, and you add data set DS04 and then data set DS05. If data set DS03 is active, and you issue the ARCHIVE LOG command, the new active log becomes DS05. However, if you stop and start Db2 during the period after you add new active log data sets and before Db2 uses them, the order of use might be different.

This behavior might change in the future, so schemes for adding and switching active logs should not depend on this order.

This process differs from the order that the database manager uses when data sets are added to the active log inventory through the DSNJU003 utility (change log inventory utility). After the NEWLOG control statement is used to add new data sets, the database manager uses active log data sets in the order in which they are added.

Suppose that the active log inventory contains DS01, DS02, and DS03. You run DSNJU003 with two NEWLOG control statements. The first control statement adds data set DS04, and the second control statement adds data set DS05 to the active log inventory. After DSNJU003 runs, the data sets are listed in the BSDS in the order DS01, DS02, DS03, DS04, DS05. When the current active log data set is DS03, and the database manager switches to a new active log data set, it switches to data set DS04.

Examples

Example 1: Initiate a system checkpoint without modifying the current LOGLOAD value.

```
-SET LOG LOGLOAD(0)
```

Example 2: Modify the system checkpoint interval to every 150000 log records.

```
-SET LOG LOGLOAD(150000)
```

Example 3: Suspend logging activity.

```
-SET LOG SUSPEND
```

Example 4: Resume logging activity.

```
-SET LOG RESUME
```

Example 5: Change checkpoint scheduling to use both log records and time.

```
-SET LOG BOTH CHKTIME(10) LOGLOAD(500000)
```

Example 6: Change checkpoint scheduling to use only log records.

```
-SET LOG SINGLE LOGLOAD(500000)
```

Example 7: Change checkpoint scheduling to use both log records and time by using the existing value for the parameter that was controlling checkpoints and the default value for the other.

```
-SET LOG BOTH
```

Example 8: Add copies of a new active log data set to the active log inventory (Db2 is in dual logging mode).

```
//JOBLIB   DD DSN=prefix.SDSNLOAD,DISP=SHR
//NEWLOG   EXEC PGM=IKJEFT01,DYNAMNBR=20
//DSNTRACE DD SYSOUT=*
//SYSTSPRT DD SYSOUT=*
//SYSPRINT DD SYSOUT=*
//SYSABEND DD SYSOUT=*
//SYSTSIN  DD *
 DSN SYSTEM(DSN1)
 -SET LOG NEWLOG(DSNCAT.LOGCOPY1.DS04) COPY(1)
 -SET LOG NEWLOG(DSNCAT.LOGCOPY1.DS05) COPY(1)
 -SET LOG NEWLOG(DSNCAT.LOGCOPY1.DS06) COPY(1)
 -SET LOG NEWLOG(DSNCAT.LOGCOPY1.DS07) COPY(1)
 -SET LOG NEWLOG(DSNCAT.LOGCOPY2.DS04) COPY(2)
 -SET LOG NEWLOG(DSNCAT.LOGCOPY2.DS05) COPY(2)
 -SET LOG NEWLOG(DSNCAT.LOGCOPY2.DS06) COPY(2)
 -SET LOG NEWLOG(DSNCAT.LOGCOPY2.DS07) COPY(2)
 END
/*
//SYSIN DD *
/*
```

The following messages are issued:

```
DSNJ363I  ) DSNJW106 COPY1 LOG DATA SET
DSNCAT.LOGCOPY1.DS04 ADDED TO THE ACTIVE LOG INVENTORY
DSNJ363I  ) DSNJW106 COPY1 LOG DATA SET
DSNCAT.LOGCOPY1.DS05 ADDED TO THE ACTIVE LOG INVENTORY
DSNJ363I  ) DSNJW106 COPY1 LOG DATA SET
DSNCAT.LOGCOPY1.DS06 ADDED TO THE ACTIVE LOG INVENTORY
DSNJ363I  ) DSNJW106 COPY1 LOG DATA SET
DSNCAT.LOGCOPY1.DS07 ADDED TO THE ACTIVE LOG INVENTORY
DSNJ363I  ) DSNJW106 COPY2 LOG DATA SET
DSNCAT.LOGCOPY2.DS04 ADDED TO THE ACTIVE LOG INVENTORY
DSNJ363I  ) DSNJW106 COPY2 LOG DATA SET
DSNCAT.LOGCOPY2.DS05 ADDED TO THE ACTIVE LOG INVENTORY
DSNJ363I  ) DSNJW106 COPY2 LOG DATA SET
DSNCAT.LOGCOPY2.DS06 ADDED TO THE ACTIVE LOG INVENTORY
DSNJ363I  ) DSNJW106 COPY2 LOG DATA SET
DSNCAT.LOGCOPY2.DS07 ADDED TO THE ACTIVE LOG INVENTORY
```

Example 10: Remove an active log data set that is currently in use.

Related concepts

Active log data sets storage requirements (Db2 Installation and Migration)

Related reference

"-ACTIVATE command (Db2)" on page 23

The Db2 command ACTIVATE enables use of new capabilities and enhancements at the specified function level, and lower function levels. Use of the ACTIVATE command to activate function level 500 or higher also marks the boundary between the ability to coexist with or fallback to Db2 11.

Chapter 68. -SET SYSPARM command (Db2)

You can use the SET SYSPARM command to change subsystem parameters that can be updated online, while Db2 is started.

Environment

This command can be issued from a z/OS console, a DSN session under TSO, a DB2I panel (DB2 COMMANDS), an IMS or CICS terminal, or a program that uses the instrumentation facility interface (IFI).

Data sharing scope: Member

Authorization

To execute this command, you must use a privilege set of the process that includes one of the following authorities:

- SYSOPR authority
- SYSCTRL authority
- SYSADM authority
- SECADM authority

To change the following security-related subsystem parameters, the privilege set of the process must include installation SYSADM authority or SECADM authority:

- AUTH_COMPATIBILITY
- AUTHCACH
- BINDNV
- DBACRVW
- DISALLOW_SSARAUTH
- EXTSEC
- ENCRYPTION_KEYLABEL
- MFA_AUTHCACHE_UNUSED_TIME
- REVOKE_DEP_PRIVILEGES
- SECADM1
- SECADM1_TYPE
- SECADM2
- SECADM2_TYPE
- SEPARATE_SECURITY
- SYSADM
- SYSADM2
- SYSOPR1
- SYSOPR2
- TCPALVER

Db2 commands that are issued from a logged-on z/OS console or TSO SDSF can be checked by Db2 authorization using primary and secondary authorization IDs. A logged-on z/OS user ID must be defined in RACF or a similar security server.

© Copyright IBM Corp. 1983, 2024

Syntax

```
►► SET SYSPARM ──┬─ LOAD( ──┬─ DSNZPARM ──────┬─ ) ──┬──►◄
                 │          └─ load-module-name ─┘      │
                 ├──────────── RELOAD ──────────────────┤
                 └──────────── STARTUP ─────────────────┘
```

Option descriptions

LOAD(*load-module-name*)
Specifies the name of the subsystem parameter load module to load into storage. The subsystem parameter load module is generated by installation job DSNTIJUZ. The default load module name is **DSNZPARM**.

RELOAD
Reloads the last named subsystem parameter load module into storage.

STARTUP
Resets loaded parameters to their startup values.

Usage notes

To update the subsystem parameters on a subsystem, follow these steps:

1. Run through the installation process in Update mode.
2. Produce a new subsystem parameter load module.
3. Issue the SET SYSPARM command.

   Important:

   - Do not issue SET SYSPARM while you are compressing the data set that contains the new subsystem parameter load module.
   - If you are compressing the data set that contains the new subsystem parameter load module, and the data set resides in the system LLA, after you compress the data set, and before you issue SET SYSPARM, issue command F LLA, REFRESH. Wait for message CSV210I, which indicates that F LLA, REFRESH is complete.

If you attempt to change installation SYSADM or installation SYSOPR subsystem parameters and you do not have the proper authority, the parameter values that are in place prior to the load of the new subsystem-parameter module are used instead of the unauthorized values in the new module. Db2 issues message DSNZ015 for each attempt of an unauthorized change to a subsystem parameter.

Examples

Example 1: Change from DSNZPARM to ADMPARM1.

```
-SET SYSPARM LOAD(ADMPARM1)
```

Example 2: Reload ADMPARM1 if it is the currently running load module.

```
-SET SYSPARM RELOAD
```

Example 3: Reload the subsystem parameters that the Db2 subsystem loaded at startup.

```
-SET SYSPARM STARTUP
```

Related concepts
Subsystem parameters (Introduction to Db2 for z/OS)

Related tasks

Updating subsystem parameter and application default values (Db2 Installation and Migration)

Related reference

Directory of subsystem parameters, panel fields, and application default values (Db2 Installation and Migration)

Chapter 69. SPUFI subcommand (DSN)

The DSN subcommand SPUFI executes the SQL processor using file input.

Environment

You can use this subcommand only under ISPF. You can issue it from ISPF option 6, or from a CLIST.

Data sharing scope: Member

Authorization

None is required.

Syntax

```
►►─ SPUFI ─►◄
```

Usage notes

SPUFI session: The SPUFI subcommand runs SPUFI and presents the SPUFI panel as the start of a SPUFI session.

In the SPUFI session, you can access the CURRENT SPUFI DEFAULTS panel. You can change DB2I defaults by splitting the screen and accessing the DB2I DEFAULTS panel, or by changing the defaults before starting the SPUFI session.

SPUFI panel variables: The SPUFI panel variables you enter after invoking SPUFI directly with the DSN command are not saved in the same place. Panel variables, therefore, vary depending on whether you execute the facility directly, or through DB2I.

© Copyright IBM Corp. 1983, 2024

Chapter 70. -START ACCEL command (Db2)

The Db2 command START ACCEL notifies the Db2 subsystem that it should use the specified accelerator servers.

Abbreviation: -STA ACCEL

On successful completion of the command, queries for the specified accelerator servers can begin to run. Db2 resets trace statistics to 0 each time that you execute the START ACCEL command.

Environment

This command can be issued from a z/OS console, a DSN session under TSO, a DB2I panel (DB2 COMMANDS), an IMS or CICS terminal, or a program that uses the instrumentation facility interface (IFI).

Data sharing scope: Group or member

Authorization

To execute this command, you must use a privilege set of the process that includes one of the following authorities:

- SYSOPR authority
- SYSCTRL authority
- SYSADM authority

Db2 commands that are issued from a logged-on z/OS console or TSO SDSF can be checked by Db2 authorization using primary and secondary authorization IDs. A logged-on z/OS user ID must be defined in RACF or a similar security server.

Syntax

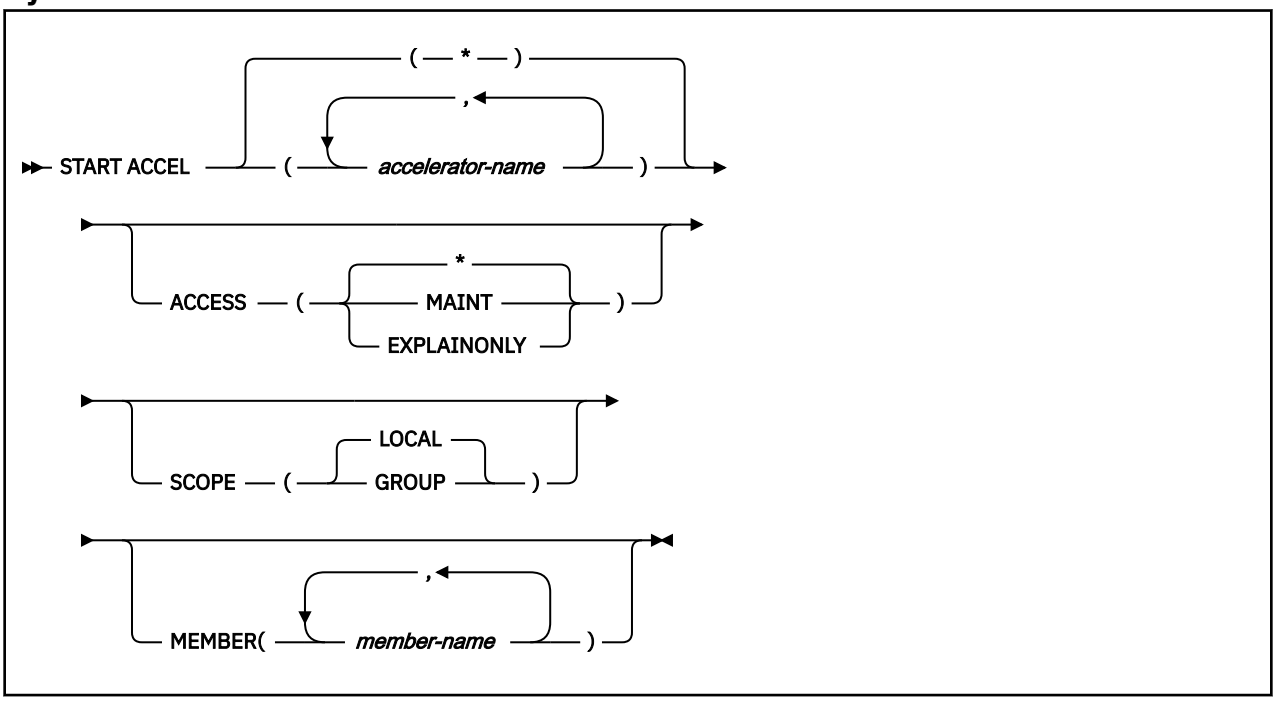

Option descriptions

© Copyright IBM Corp. 1983, 2024

(*accelerator-name*)
The accelerator server name.

(*)
Indicates that the start command applies to all accelerator servers.

ACCESS
Specifies whether access to accelerator servers is general or restricted. Valid values are:

(*)
Allows general access; all authorized users can use the accelerator server.

(MAINT)
Allows only installation SYSADM and installation SYSOPR access to the accelerator server.

(EXPLAINONLY)
Prohibits use of the accelerator server except for SQL EXPLAIN execution. No queries will be executed by this server.

SCOPE
Specifies the scope of the command. In a non-data-sharing environment, the option is ignored. Valid values are:

(LOCAL)
Starts the accelerator server for the current member.

(GROUP)
Starts accelerator servers for the entire data sharing group.

MEMBER
Restricts the start of the identified accelerator server to specific members of the data sharing group. The default behavior is to start accelerator servers on the local member. This option is not supported in non-data sharing environments.

Usage notes

When to issue START ACCEL commands
You must issue START ACCEL when you add a new accelerator server to the SYSACCELERATORS pseudo-catalog table, or when you have modified the information in this table and issued the -STOP ACCEL command.

Specifying both SCOPE(GROUP) and MEMBER(*member-name*)

If both SCOPE(GROUP) and MEMBER(*member-name*) are specified, the command will be executed only on the specified member or members.

You can monitor the status of a started accelerator server by running the -DISPLAY ACCEL command.

Trace information for commands issued with group scope
If this command is issued with options that specify group scope in a Db2 data sharing member, it also runs on all other active members. IFICID 090 trace records for other group members can show that the same command was issued by the SYSOPR authorization ID from the 016.TLPKN5F correlation ID, in addition to the trace records from the member where the original command was issued. See Command scope in Db2 data sharing (Db2 Data Sharing Planning and Administration).

Example

The following command starts all accelerator servers.

```
-START ACCEL
```

Sample results:

```
 DSNX820I ) DSNX8STA START ACCELERATOR SUCCESSFUL FOR BLINK1
 DSNX820I ) DSNX8STA START ACCELERATOR SUCCESSFUL FOR BLINK2
 DSNX820I ) DSNX8STA START ACCELERATOR SUCCESSFUL FOR BLINK3
```

```
DSNX821I ) DSNX8STA ALL ACCELERATORS STARTED
DSN9022I ) DSNX8CMD '-START ACCEL' NORMAL COMPLETION
```

Related tasks

Identify available accelerators to Db2 for z/OS (Db2 Performance)

Enabling Db2 for IBM Db2 Analytics Accelerator for z/OS (Db2 Performance)

Related information

IBM Db2 Analytics Accelerator for z/OS documentation

Chapter 71. START admtproc command

The START *admtproc* command starts the scheduler that is specified in the *admtproc* parameter.

This command can be started at the operator's console, or during Db2 startup or initialization. Once started, the administrative task scheduler is always up, unless it is stopped by a STOP command at the operator's console.

Each Db2 subsystem has a coordinated administrative task scheduler address space for starting a z/OS started task procedure, therefore if there are many Db2 subsystems running on one z/OS, there is a separate administrative task scheduler with a separate name for each. Two instances of the same administrative task scheduler cannot run simultaneously. To avoid starting up a duplicate administrative task scheduler, at startup the administrative task scheduler checks all of the address spaces for duplicate names. If another address space with the same name is already running, the administrative task scheduler that is starting up will immediately shut down with a console error message. The administrative task scheduler can only check the address spaces in the same system, but not the entire sysplex.

Environment

This command can be issued only from a z/OS console.

Data sharing scope: Member

Authorization

The command requires an appropriate level of operating system authority.

Syntax

```
►► START ── admtproc, ──┬──────────────────────────┬──►◄
                        └─ TRACE= ─┬─ ON ─┬─┘
                                   └─ OFF ─┘
```

Options must be separated by commas, with no spaces.

Option descriptions

admtproc
Specifies the procedure name of the administrative task scheduler task that you want to start.

trace
Traces can be turned on or off using this option.

Examples

Example: This command starts the *admtproc* scheduler.

Enter the following command on the system console:

```
start admtproc
```

© Copyright IBM Corp. 1983, 2024

Chapter 72. -START CDDS command (Db2)

The Db2 command START CDDS directs all members of a Db2 data sharing group to allocate and open the compression dictionary data set (CDDS).

Abbreviation: -STA CDDS

Environment

This command can be issued from a z/OS console, a DSN session under TSO, a DB2I panel (DB2 COMMANDS), an IMS or CICS terminal, or a program that uses the instrumentation facility interface (IFI).

This command must be issued from the source or proxy data sharing group in an implementation of the GDPS Continuous Availability with zero data loss solution.

Data sharing scope: Group

Authorization

To execute this command, you must use a privilege set of the process that includes one of the following privileges or authorities:

- BSDS privilege
- SYSCTRL authority
- SYSADM authority

Db2 commands that are issued from a logged-on z/OS console or TSO SDSF can be checked by Db2 authorization using primary and secondary authorization IDs. A logged-on z/OS user ID must be defined in RACF or a similar security server.

Syntax

```
►►─ START CDDS ─►◄
```

Usage notes

Trace information for data sharing members

When this command with group scope is issued in a Db2 data sharing member, it also runs on all other active members. IFICID 090 trace records for other group members can show that the same command was issued by the SYSOPR authorization ID from the 016.TLPKN5F correlation ID, in addition to the trace records from the member where the original command was issued. See Command scope in Db2 data sharing (Db2 Data Sharing Planning and Administration).

Examples

Example: Allocating and opening the CDDS on all members of a source data sharing group

Issue this command:

```
-START CDDS
```

If the command is successful, output like this is displayed:

```
DSNJ375I - DSNJB101 CDDS DSNAME = cdds-name IS ACTIVE IN SOURCE
MODE.

DSN9022I - DSNJC001 'START CDDS' NORMAL COMPLETION
```

© Copyright IBM Corp. 1983, 2024

Related tasks

Recovering the compression dictionary data set without bringing down a Db2 data sharing group (Db2 Administration Guide)

Chapter 73. -START DATABASE command (Db2)

The **START DATABASE** command makes the specified database available for use.

Depending on which options you specify, the following objects can be made available for read-only processing, read-write processing, or utility-only processing:

- Databases
- Table spaces
- Index spaces
- Physical partitions of partitioned table spaces or index spaces (including index spaces housing data-partitioned secondary indexes (DPSIs))
- Logical partitions of nonpartitioned secondary indexes.

The command is typically used after one of the following events:

- The STOP DATABASE command is issued
- A table space, partition, or index is placed in group buffer pool RECOVER-pending status (GRECP)
- Pages have been put on the logical page list (LPL) for a table space, partition, or index

In a data sharing environment, the command can be issued from any Db2 subsystem in the group that has access to the specified database.

Abbreviation: -STA DB

Environment

This command can be issued from a z/OS console, a DSN session, a DB2I panel (Db2 COMMANDS), an IMS or CICS terminal, or a program using the instrumentation facility interface (IFI).

Data sharing scope: Group

Authorization

To execute this command, you must use a privilege set of the process that includes one of the following authorities:

- STARTDB privilege
- DBMAINT authority
- DBCTRL authority
- DBADM authority
- System DBADM authority
- SYSCTRL authority
- SYSADM authority

When you are using a privilege set that does not contain the STARTDB privilege for a specified database, Db2 issues an error message.

For implicitly created databases, the database privilege or authority can be held on the implicitly created database or on DSNDB04. If the START DATABASE command is issued on specific table spaces or index spaces in an implicitly created database, ownership of the table spaces is sufficient to start them. This means that the owner can display information about an implicitly created table space or index space if the command explicitly specifies that table space or index space name.

All specified databases with the STARTDB privilege included in the privilege set of the process are started.

© Copyright IBM Corp. 1983, 2024

Db2 commands that are issued from a logged-on z/OS console or TSO SDSF can be checked by Db2 authorization using primary and secondary authorization IDs. A logged-on z/OS user ID must be defined in RACF or a similar security server.

When data definition control is active, installation SYSOPR or installation SYSADM authority is required to start a database, a table space, or an index space containing a registration table or index.

Table space DBD01 in database DSNDB01 and table spaces and index spaces in database DSNDB06 are required to check the authorization for using the START DATABASE command. If a table space or index space required for this authorization check is stopped, or is unavailable because it is in LPL or GRECP status, installation SYSADM authority is required to start any database, table space, or index space, including the ones required for the authorization check.

Syntax

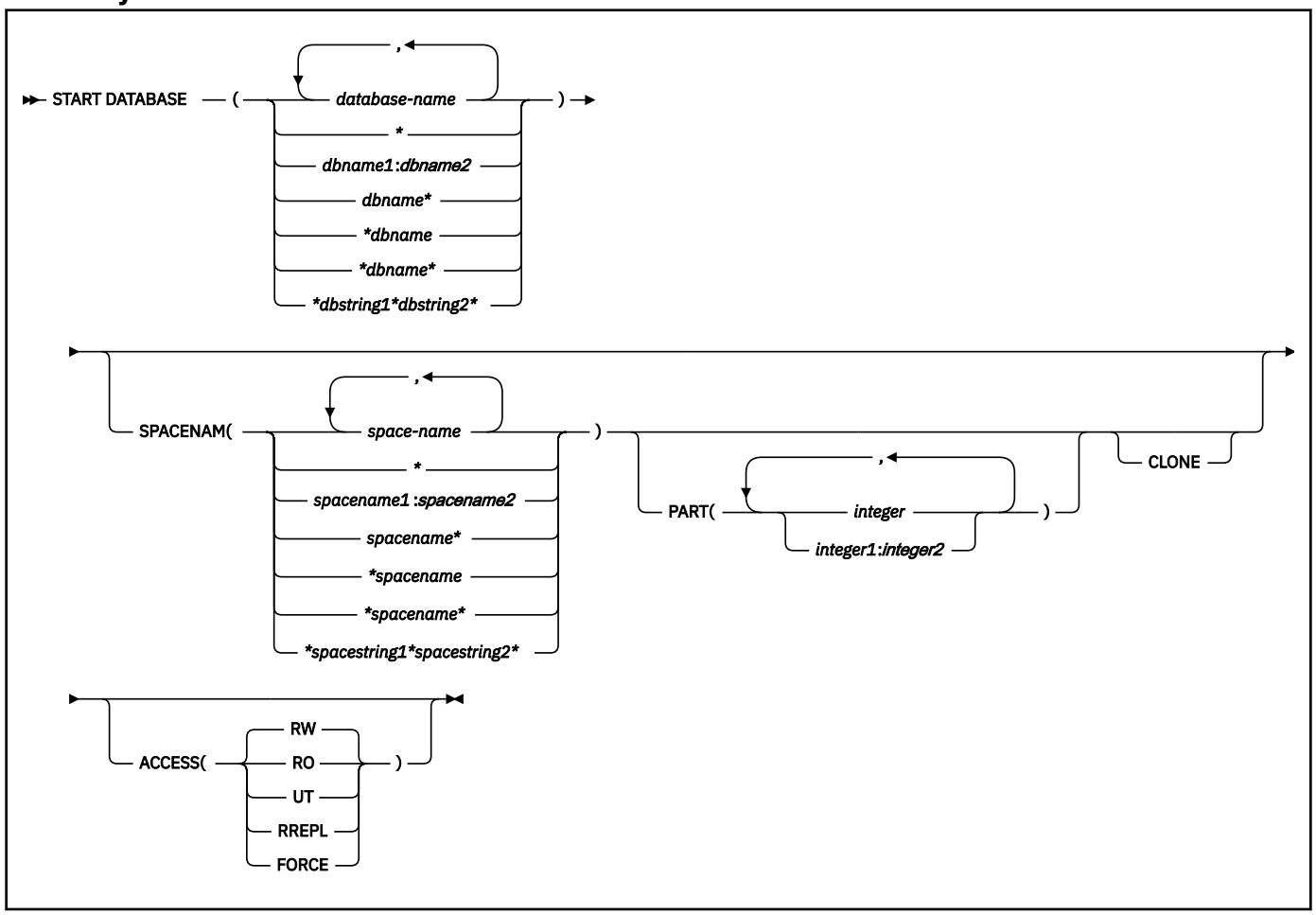

Option descriptions

(*database-name* , ...)

Specifies the name of a database, or a database for the table spaces or index spaces that are to be started. The following variations are accepted:

(database-name, ...)

Identifies one or more database names, separated by commas or blanks.

(*)

All databases that are defined to the Db2 subsystem for which the privilege set of the process has the required authorization.

(*dbname1*:*dbname2*)

All databases whose names, in UNICODE, are between *dbname1* and *dbname2* inclusive.

(*dbname)**
All databases whose names begin with the string *dbname* that contains 1–7 characters.

(dbname*)**
All databases whose names end with the string *dbname* that contains 1–7 characters.

(dbname**)**
All databases whose names contain the string *dbname*,where *dbname* that contains 1–6 characters.

(dbstring1*dbstring2**)**
All databases whose names contain the strings *dbstring1* and *dbstring2* that together contain a total of 2–5 characters.

SPACENAM
Specifies the particular table spaces or indexes within the database that are to be started. If you use ACCESS(FORCE), you must use SPACENAM with a list of table space and index names.

Abbreviation: SPACE, SP

(*space-name* , ...)
Specifies the name of a table space or index space that is to be started. You can use a list of several names of table spaces and index spaces.

(spacename, ...)
One ore more index space names, separated by commas or blanks.

(*)
All table spaces or index spaces that are defined to the Db2 subsystem for which the privilege set of the process has the required authorization.

(*spacename1*:*spacename2*)
All table spaces or index spaces whose names, in UNICODE, are between *spacename1* and *spacename2* inclusive

(*spacename)**
All table spaces or index spaces whose names begin with the string *spacename* that contains 1–7 characters.

(spacename*)**
All table spaces or index spaces whose names end with the string *spacename* that contains 1–7 characters.

(spacename**)**
All table spaces or index spaces whose names contain the string *spacename* that contains 1–6 characters.

(spacestring1*spacestring2**)**
All table spaces or index spaces whose names contain the strings *spacestring1* and *spacestring2* that together contain a total of 2–5 characters.

PART (*integer* , ...)
Specifies the partition number of one or more partitions, within the specified table space or index, that are to be started. The start or stop state of other partitions does not change.

The specified *integer* must identify a valid partition number for the corresponding space name and database name. If you specify nonvalid partition numbers, you receive an error message for each nonvalid number, but all other valid partitions that you specified are started.

integer can be written to designate one of the following specifications:

- A list of one or more partitions
- A range of all partition numbers that are greater than or equal to *integer1* and less than or equal to *integer2*
- A combination of lists and ranges

The PART option is valid with partitioned table spaces, partitioned indexes, and nonpartitioned type 2 indexes of partitioned table spaces. If you specify PART with a nonpartitioned table space

or index on a nonpartitioned table space, you receive an error message, and the nonpartitioned space is not started.

CLONE
Starts clone objects. In the absence of the CLONE keyword, base table objects are started and the clone table objects are not processed. If you specify the CLONE keyword then only clone objects are processed.

ACCESS
Specifies whether the objects that are started are in read/write, read only, or utility only status. Also forces access to objects that are in unavailable status.

Abbreviation: ACC

(RW)
Allows programs to read from and write to the specified databases, table spaces, indexes, or partitions.

(RO)
Allows programs to only read from the specified databases, table spaces, indexes, or partitions. Any programs attempting to write to the specified objects will not succeed. Do not use this option for a database for declared temporary tables (databases created with the AS TEMP option).

(UT)
Allows only Db2 online utilities and the SQL DROP statement to access the specified databases, table spaces, indexes, or partitions.

(RREPL)
Allows programs only read access to the specified databases, table spaces, indexes, or partitions, unless those programs were identified as replication programs. Attempts by non-replication programs to write to the specified objects fail. Most Db2 utilities are allowed on the specified objects.

Restriction: Do not use ACCESS(RREPL) for a database for declared temporary tables (a database that was created with the AS TEMP option).

(FORCE)
Resets any indications that a table space, index, or partition is unavailable because of pages in the logical page list, pending-deferred restarts, write-error ranges, read-only accesses, or utility controls. FORCE also resets the CHECK-pending, COPY-pending, and RECOVER-pending states. Full access to the data is forced. FORCE cannot be used to reset the restart-pending (RESTP) state.

When using ACCESS(FORCE), you must use a single database name, the SPACENAM option, and an explicit list of table space and index names. You cannot use any range or combination of pattern-matching characters (*), including DATABASE (*) or SPACENAM (*).

A utility-restrictive state is reset (and the utility is terminated) only if all of the target objects are reset with this command. To identify which objects are target objects of the utility, use the DISPLAY DATABASE command, or run the DIAGNOSE utility with the DISPLAY SYSUTIL option. The DIAGNOSE utility should be used only under the direction of IBM Software Support.

Note: ACCESS(FORCE) will not successfully complete if the object you are trying to force was placed in a utility-read-only (UTRO), utility-read-write (UTRW), or utility-utility (UTUT) state by a utility running in a previous release of Db2. If this situation is encountered, Db2 issues message DSNI041I. To reset the restrictive state, you must terminate the utility using the release of Db2 in which it was started.

A table space or index space that is started with ACCESS(FORCE) might be in an inconsistent state.

Usage notes

Data sets offline

Disk packs that contain partitions, table spaces, or indexes, do not necessarily need to be online when a database is started. Packs must, however, be online when partitions, table spaces, or indexes are first referred to. If they are not online, an error in opening occurs.

Table spaces and indexes explicitly stopped

If table spaces and indexes are stopped explicitly (using the STOP DATABASE command with the SPACENAM option), they must be started explicitly. Starting the database does not start table spaces or indexes that have been explicitly stopped.

Effect on objects marked with GRECP or with LPL entries

If a table space, partition, or index is in the group buffer pool RECOVER pending (GRECP) status, or if it has pages in the logical page list (LPL), the START DATABASE command begins recovery of the object. You must specify the SPACENAM option and ACCESS (RW) or (RO).

This recovery operation is performed even if SPACENAM specifies an object that is already started.

If the object is stopped when the command is issued, then the START DATABASE command both starts the object and clears the GRECP or LPL status. If the GRECP or LPL recovery action cannot complete, the object is still started.

If any table space or index space that is required to check command authority is unavailable, Installation SYSADM or Installation SYSOPR authority will be required to issue the START DATABASE command.

When recovering objects that are in GRECP or LPL status, avoid using pattern-matching characters (*) for both the database name and the space name. Multiple START DATABASE(*dbname*) SPACENAM(*) commands running in parallel should complete faster than one START DATABASE(*) SPACENAM(*) command.

If you use pattern-matching characters (*) for both the database name and space name, you must have DBMAINT authority and ensure that the catalog and directory databases have already been explicitly started in the following order:

```
-START DATABASE(DSNDB01) SPACENAM(SYSLGRNX,DSNLLX01,DSNLLX02)
-START DATABASE(DSNDB01) SPACENAM(*)
-START DATABASE(DSNDB06) SPACENAM(*)
```

Although not recommended, you can start an object using START DATABASE ACCESS(FORCE). That deletes all LPL and write error page range entries without recovering the pages. It also clears the GRECP status.

When a table space or partition is placed in the LPL because undo processing is needed for a NOT LOGGED table space, the **-START DATABASE** command does not remove the table space or partition from the LPL.

When starting a LOB table space defined as LOG NO and either in GRECP or having pages in the LPL, the LOB table space will be placed in the AUXW state and the LOB will be invalidated if Db2 detects that log records required for LPL recovery are missing due to the LOG NO attribute.

Use of ACCESS(FORCE)

The ACCESS(FORCE) option is intended to be used when data has been restored to a previous level after an error, by DSN1COPY, or by a program that is not Db2 for z/OS, and the exception states resulting from the error still exist and cannot be reset. When using ACCESS(FORCE), it is up to the user to ensure the consistency of data with respect to Db2.

If an application process requests a transaction lock on a table space that is in a restrictive status (RECP) or has a required index in a restrictive status, Db2 acquires the lock. Db2 does not detect the status until the application tries to access the table space or index, when the application receives an error message indicating that the resource is not available (SQLCODE -904). After receiving this message, the application should release the lock, either by committing or rolling back (if the value of

the RELEASE option is COMMIT) or by ending (if the value of RELEASE is DEALLOCATE). If you issue the command START DATABASE ACCESS(FORCE) for either the table space or the index space while the lock is in effect, the command fails.

If an object has retained locks (that is, a member of a Db2 data sharing group has failed and the locks it held on the object are retained in the lock structure), START DATABASE ACCESS (FORCE) is not allowed.

START DATABASE ACCESS(FORCE) does not execute if postponed abort or indoubt units of recovery exist. If you attempt to issue the START DATABASE ACCESS(FORCE) command in this situation, the command fails. FORCE cannot be used to reset the restart pending (RESTP) state.

Restricted mode (RO or UT)

When a START DATABASE command for a restricted mode (RO and UT) takes effect depends on whether applications are started after the START DATABASE command has completed, or whether applications are executing at the time the command is issued. For applications that are started after START DATABASE has completed, access restrictions are effective immediately. For applications that are executing at the time START DATABASE is issued, the access restrictions take effect when a subsequent claim is requested or the application is allowed to run to completion. Whether the application is interrupted by the START DATABASE command depends on various factors. These factors include the ACCESS mode that is specified on the START DATABASE command, the type of drain activity, if any, on the table space or partition, and whether any cursors are being held on the table space or partition.

Do not start table spaces or index spaces for defined temporary tables with RO or UT access. You can start a temporary file database with UT access to accommodate the REPAIR DBD utility.

If the table space, index, or partition must be accessed in a mode that is incompatible with the ACCESS type currently in effect, Db2 issues a resource-unavailable message.

For shared-owner databases, a STOP DATABASE command must be issued to quiesce a database or table space prior to issuing the START DATABASE command.

Starting a table space partition in PRO restricted status: When a table space that is in Persistent Read Only (PRO) restricted status is started, the partition remains in PRO restricted status.

Communications database or resource limit facility

If the communications database (CDB) or resource limit facility (RLF) is currently being used by any member of the data sharing group, any attempt to start either active database or table space with ACCESS(UT) fails.

Synchronous processing completion

Message DSN9022I indicates that synchronous processing has completed successfully.

Asynchronous processing completion

Recovery of objects in GRECP status or with pages on the LPL is performed asynchronously. Message DSNI022I is issued periodically to give you the progress of the recovery. The starting of databases, table spaces, or indexes (a synchronous task) often completes before the recovery operation starts. Therefore, when Db2 issues message DSN9022I, which indicates that synchronous processing has completed, the recovery of objects might not be complete.

Message DSNI006I is issued in response to the START DATABASE command when the object (table space or index space) that is identified by TYPE and NAME has group buffer pool recovery pending (GRECP) or logical page list (LPL) status, and recovery was triggered. Message DSNI051I indicates that second pass log apply for GRECP or LPL recovery of an index space has started. The START DATABASE command does not complete until the asynchronous task of recovery completes.

Message DSNI021I indicates that asynchronous processing for an object has completed. You can issue the command DISPLAY DATABASE to determine whether the recovery operation for all objects is complete. If recovery is complete, the output from the command shows either a RW or a RO status without LPL or GRECP.

Starting a LOB table space

The **START DATABASE** command can be used to start LOB table spaces and indexes on auxiliary tables. LOB table spaces are started independently of the base table space with which the LOB table space is associated.

Trace information for data sharing members

When this command with group scope is issued in a Db2 data sharing member, it also runs on all other active members. IFICID 090 trace records for other group members can show that the same command was issued by the SYSOPR authorization ID from the 016.TLPKN5F correlation ID, in addition to the trace records from the member where the original command was issued. See Command scope in Db2 data sharing (Db2 Data Sharing Planning and Administration).

Examples

Example 1: Start table space DSN8S81E in database DSN8D81A. Recover the table space if it is in GRECP status or recover the pages on the LPL if one exists.

```
-START DATABASE (DSN8D81A) SPACENAM (DSN8S81E)
```

Example 2: Start all databases (except DSNDB01, DSNDB06, and work file databases) for which you have authority. Recovery for any objects with GRECP or LPL status is not performed.

```
-START DATABASE (*)
```

Example 3: Start the third and fourth partitions of table space DSN8S81E in database DSN8D81A for read-only access. Recover the partitions if they are in GRECP status or recover the pages on the LPL if one exists.

```
-START DATABASE (DSN8D81A) SPACENAM (DSN8S81E) PART (3,4) ACCESS (RO)
```

Example 4: Start all table spaces that begin with "T" and end with the string "IQUA03" in database DBIQUA01 for read and write access.

```
-START DATABASE (DBIQUA01) SPACENAM (T*IQUA03) ACCESS (RW)
```

This command produces output that is similar to the following output:

```
DSN9022I - DSNTDDIS 'START DATABASE' NORMAL COMPLETION
```

Example 5: Start clone objects.

```
-START DATABASE (MYDB*) SPACENAM (MYDB*SP) CLONE
```

Chapter 74. -START DB2 command (Db2)

The Db2 command START DB2 initializes the Db2 subsystem. When the operation is complete, the Db2 subsystem is active and available to TSO applications and to other subsystems (for example, IMS and CICS).

The effect of restarting the system can be controlled by a conditional restart control record, which you create by using the DSNJU003 (change log inventory) utility. For more details about the effects, see "Usage notes" on page 471.

Important: Do not attempt to start Db2 at a code level that is lower than the catalog level or highest ever activated function level. For more information, see Function levels and related levels in Db2 12 (Db2 for z/OS What's New?).

Abbreviation: -STA DB2

Environment

This command can be issued only from a z/OS console. The name of the Db2 subsystem is determined by the command prefix. For example, -START indicates that the Db2 subsystem to be started is the one with '-' as the command prefix.

The command is rejected if the Db2 subsystem is already active. The restart recovery status of Db2 resources is determined from the prior Db2 shutdown status.

Data sharing scope: Member

Authorization

None is required. However, the command can be executed only from a z/OS console with the START command capability.

Syntax

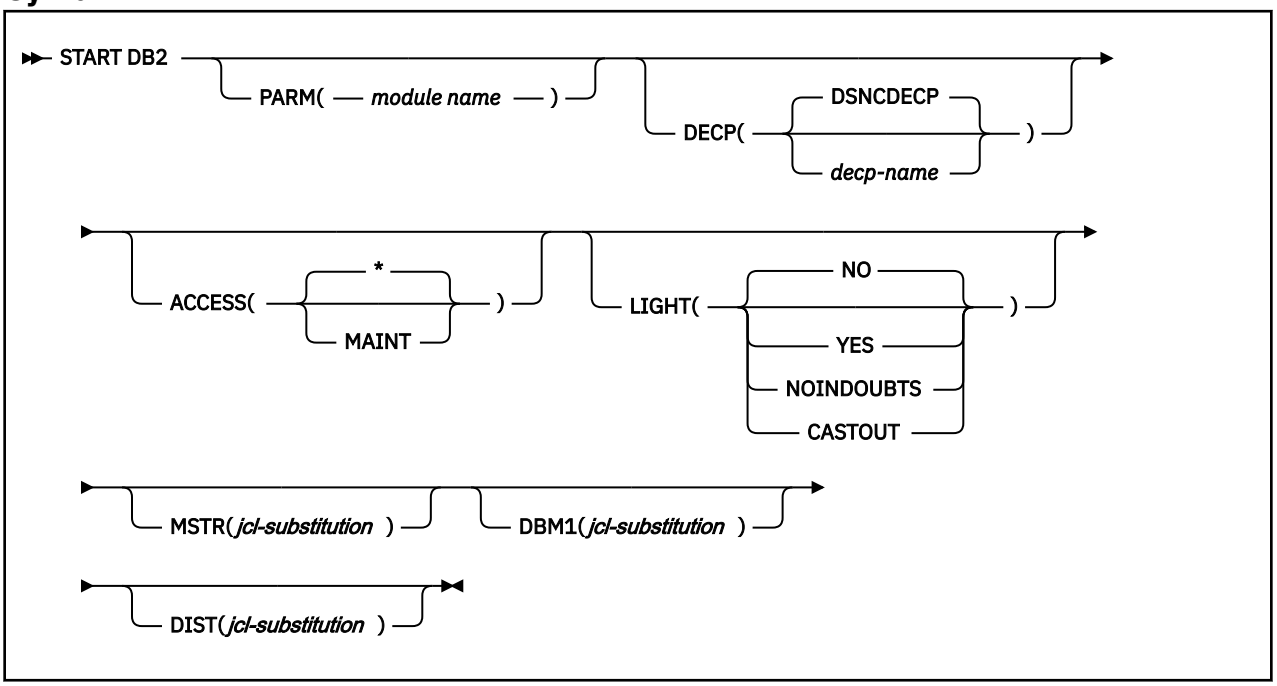

© Copyright IBM Corp. 1983, 2024

Option descriptions

None of the following options are required.

PARM (*module-name*)
Specifies the load module that contains the Db2 subsystem parameters.

The default is the name of the parameter module that was specified on panel DSNTIPO when the installation CLIST was run. The default can also be changed if you update ZPARM(*default-module-name*) in the *ssnm*MSTR Db2 subsystem startup procedure.

DECP
Specifies the name of the load module that contains Db2 application parameter defaults.

decp-name is the name of a module that is provided by the installation. The default name is DSNHDECP. If the specified module is not found or cannot be loaded, an error is issued, and the Db2 subsystem does not start.

ACCESS
Specifies whether access to Db2 is to be general or restricted.

Abbreviation: ACC

(*)
Makes access general; all authorized users can connect to Db2.

The **default** is ACCESS(*) .

(MAINT)
Prohibits access to any authorization IDs other than installation SYSADM, installation SYSOPR, and SECADM.

For data sharing, ACCESS(MAINT) restricts access on only the Db2 member on which you execute this command. Other members of the data sharing group are unaffected.

LIGHT
Specifies whether a light restart is to be performed in a data sharing environment.

(NO)
A light restart is not performed.

(YES)
Specifies that a light restart is to be performed. Db2 takes these actions:

- Starts with reduced storage.
- Waits for resolution of indoubt units of recovery.
- Frees retained locks. Page set P-locks in IX or SIX mode are not freed.
- Terminates normally.

(NOINDOUBTS)
Specifies that Db2, during a light restart, does not wait for indoubt units of recovery to resolve before it terminates.

(CASTOUT)
Specifies that a light restart is to be performed with castout processing. Db2 takes these actions:

- Starts with reduced storage.
- Waits for resolution of indoubt units of recovery.
- Performs castout processing.
- Frees retained locks. Page set P-locks in IX or SIX mode are freed, if possible.
- Terminates normally.

If a light restart does not resolve all indoubt and postponed-abort units of recovery, Db2 does not release the associated page set P-locks that are in IX or SIX mode. One reason for unresolved

postponed-abort units of recovery is that the LBACKOUT subsystem parameter is set to LIGHT or LIGHTAUTO.

MSTR (*jcl-substitution*)
Specifies parameters and values to be substituted in the EXEC statement of the JCL that executes the startup procedure for the system services address space (*ssnm*MSTR), where *jcl-substitution* is one or more character strings of the form *keyword=value*, enclosed between apostrophes. If you use more than one character string, separate each string with a comma and enclose the entire list between a single pair of apostrophes. For the list of supported keywords, see Starting a system task from a console (MVS System Commands).

Restriction: Db2 address spaces, and all connected address spaces, cannot be started with the REUSASID=YES keyword to use the z/OS reusable address space ID (ASID) capability.

Tip: You can omit the MSTR, DBM1, and DIST keywords, or omit any *jcl-substitution* keywords, to use the values specified in the address-space startup procedures, which are created when you run job DSNTIJMA during the installation process.

DBM1 (*jcl-substitution*)
Specifies parameters and values to be substituted in the EXEC statement of the JCL that executes the startup procedure for the database services address space (*ssnm*DBM1), where *jcl-substitution* is as described for MSTR.

DIST (*jcl-substitution*)
Specifies parameters and values to be substituted in the EXEC statement of the JCL that executes the startup procedure for the DDF address space (*ssnm*DIST), where *jcl-substitution* is as described for MSTR.

Usage notes

Command prefix
If your installation has more than one Db2 subsystem, you must define more than one command prefix.

Conditional restart

A conditional restart control record can prevent a complete restart and specify current status rebuild only. In that case, the following actions occur during restart:

- Log records are processed to the extent that is determined by the conditional restart control record.
- The following values are displayed:
  - The relative byte address (RBA) of the start of the active log
  - The RBA of the checkpoint record
  - The status counts for units of recovery
  - The display table for restart unit of work elements
- The restart operation terminates with an abend.

Light restart with ARM

To enable a light restart in an ARM environment, you must code an ARM policy for Db2 and IRLM.

The following example shows an ARM policy for Db2, where the element name is the Db2 data sharing group name and member name concatenated. For example, DSNDB0GDB1G.

```
ELEMENT(
elementname
)

   RESTART_METHOD(SYSTERM,STC,'
cmdprfx
 STA DB2,LIGHT(YES)')
```

The following example shows an ARM policy for IRLM, where the element name is the IRLM group name and the ID concatenated. For example, DXRDB0GDJ1G001.

```
ELEMENT(
elementname
)

   RESTART_METHOD(SYSTERM,STC,'
cmdprfx
 S
irlmproc
')
```

The element name that Db2 uses is the Db2 data sharing group name and member name concatenated. For example, DSNDB0GDB1G.F

Endless wait during start
The start operation might begin and fail to complete, if the system services address space (*ssnm*MSTR) starts and the database services address space (*ssnm*DBM1) cannot start. If a seemingly endless wait occurs, cancel the system services address space (*ssnm*MSTR) from the console, and check both startup procedures for JCL errors.

Starting members of a data sharing group

To start members of a data sharing group, you must enter a START DB2 command for each subsystem in the group. If it is the first startup of the group, you must start the originating member (the first Db2 that was installed) first.

Starting data sharing members with light restart
When starting data sharing members with light restart, start one data sharing member a time.

Restarting data sharing members after light restart
Restart any Db2 data sharing member that goes through restart light again with a regular start. Otherwise, certain lock avoidance optimizations can remain disabled for all data sharing members. For more information about the optimizations that might become disabled, see "Global commit LRSN enhancement" in Db2 12 for z/OS Performance Topics (IBM Redbooks).

Examples

Example 1
Start the Db2 subsystem.

```
-START DB2
```

Example 2
Start the Db2 subsystem, and provide a new value for the REGION parameter in the startup procedure for the system services address space (*ssnm*MSTR).

```
-START DB2 MSTR('REGION=6000K')
```

Example 3
Start the Db2 subsystem. Assuming that the EXEC statement of the JCL that executes the startup procedure for the system services address space (*ssnm*MSTR) uses the symbol RGN, provide a value for that symbol.

```
-START DB2 MSTR('RGN=6000K')
```

Example 4
Db2 subsystems DB1G and DB2G are members of a data sharing group. Both were installed with a command prefix scope of STARTED. Start DB1G and DB2G by routing the appropriate commands to the z/OS system on which they are to be started, MVS1 and MVS2.

```
ROUTE MVS1,-DB1G START DB2
ROUTE MVS2,-DB2G START DB2
```

Example 5

Start the Db2 subsystem, then provide the parameter module and a value for the DECP option. Enter either DSNCDECP or another *decp-name*

```
-START DB2 PARM(VA1AZNS) DECP(DSNHDVA1)
```

Chapter 75. -START DDF command (Db2)

The Db2 command START DDF starts the distributed data facility (DDF) if it is not already started.

Abbreviation: -STA DDF

Environment

This command can be issued from a z/OS console, a DSN session under TSO, a DB2I panel (DB2 COMMANDS), an IMS or CICS terminal, or a program using the instrumentation facility interface (IFI).

Data sharing scope: Member

Authorization

To execute this command, you must use a privilege set of the process that includes one of the following authorities:

- SYSOPR authority
- SYSCTRL authority
- SYSADM authority

Db2 commands that are issued from a logged-on z/OS console or TSO SDSF can be checked by Db2 authorization using primary and secondary authorization IDs. A logged-on z/OS user ID must be defined in RACF or a similar security server.

Syntax

```
►►─ START DDF ─►◄
```

Usage note

The START DDF command activates the DDF interface to VTAM and TCP/IP. When this command is issued after STOP DDF MODE(SUSPEND), suspended threads are resumed and DDF activity continues.

Example

Start the distributed data facility.

```
-START DDF
```

Related concepts

Starting and stopping DDF in data sharing (Db2 Data Sharing Planning and Administration)

Related tasks

Starting DDF (Db2 Administration Guide)

Stopping DDF (Db2 Administration Guide)

Related reference

DDF STARTUP OPTION field (DDF subsystem parameter) (Db2 Installation and Migration)

-STOP DDF command (Db2)

The Db2 command STOP DDF stops the distributed data facility (DDF) if it has already been started; use this command to terminate the DDF interface to VTAM or TCP/IP.

© Copyright IBM Corp. 1983, 2024

Chapter 76. -START DYNQUERYCAPTURE command (Db2)

The Db2 command START DYNQUERYCAPTURE stabilizes access paths for qualified cached dynamic queries. This command can also optionally start monitoring of cached dynamic queries that qualify for a scope but have not met the specified execution threshold for stabilization.

All statements in the dynamic statement cache are qualified for capture, with the following exceptions:

- Queries that were prepared with the REOPT(AUTO) bind option
- Queries that were prepared with the CONCENTRATE STATEMENT WITH LITERALS bind option
- Queries that were transformed because they reference system temporal, application temporal, or archived transparency tables and one or more of the following settings uses a non-default value:
  - CURRENT SYSTEM TEMPORAL TIME special register
  - CURRENT BUSINESS TEMPORAL TIME special register
  - GET_ARCHIVE global variable

Abbreviation: -STA DYNQUERY

Environment

This command can be issued from the z/OS console, through a batch job, or the instrumentation facility interface (IFI).

Data sharing scope: Member

Authorization

To execute this command, you must use a privilege set of the process that includes one of the following authorities:

- SQLADM authority
- System DBADM authority
- SYSOPR authority
- SYSCTRL authority
- SYSADM authority

Syntax

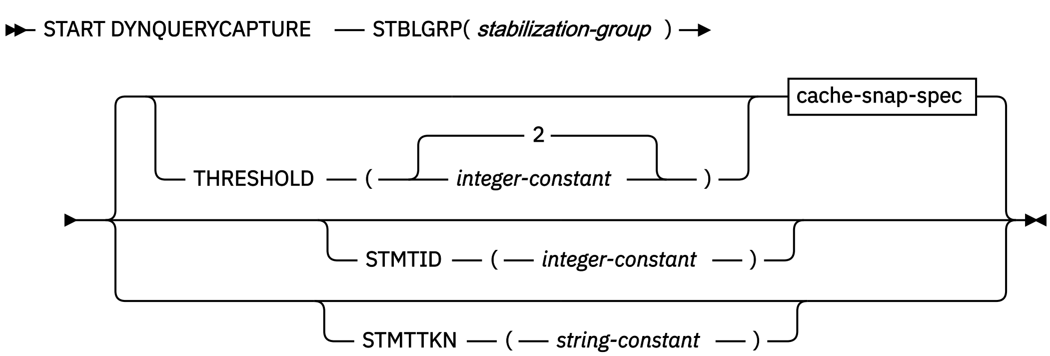

cache-snap-spec

```
CURSQLID( * | SQLID )   MONITOR( NO | YES )
SCOPE( LOCAL | GROUP )
```

Option descriptions

STBLGRP
A user provided stabilization group name. You can use the stabilization group to logically associate a set of queries. The stabilization group name can be used as input to a FREE command to free all the queries for a stabilization group.

THRESHOLD
The threshold for stabilizing dynamic SQL statements. When the number of executions for a qualified statement is equal to or greater than the *integer-constant* value, the statement is scheduled for stabilization.

Statement executions are counted only when IFCID 316 and IFCID 318 are both activated. Otherwise the execution count remains 0.

The default value is 2.

STMTID
Stabilize an individual statement that has the specified STMTID value in the dynamic statement cache.

STMTTKN
Stabilize an individual statement that has the specified STMTTKN value.

CURSQLID
Specifies the scope of statements captured:

*****
Capture all dynamic SQL statements. This is the default value.

SQLID
The scope of captured dynamic SQL statements us limited to statements that have the CURRENT SQLID value.

MONITOR
Specifies whether to process statements in the statement cache and stop, or to process the statements in the statement cache and enable monitoring of queries that qualify for the scope, but have not met the THRESHOLD value.

NO
Schedule stabilization for qualified statements within the cache that exceed the execution threshold.

YES
Schedule stabilization for qualified statements that exceed the execution threshold, and monitoring for qualified statements that have not met the execution threshold.

If a statement is eligible for capture under more than one monitor, the monitor with the lower threshold applies. If multiple eligible monitors have the same threshold, the monitor that was started first applies.

SCOPE
Specifies the scope of the command.

LOCAL
Starts the capture on the local Db2 system only.

GROUP
Starts the capture on all members of the data sharing group.

Usage notes

Stopping and starting Db2
If Db2 is stopped and started after you have started a DYNQUERY CAPTURE MONITOR, the monitor is not restarted automatically.

Specifying SCOPE (GROUP)
If a monitor is started with SCOPE(GROUP), and a new member joins the data sharing group after the monitor is started, the monitor is not started automatically at the new member.

Examples

Stabilize queries in the dynamic cache with CURRENT SQLID of ADMF001 and have been executed at least 50 times
You issue the following command:

```
-STA DYNQUERYCAPTURE STBLGRP(ABC) THRESHLD(50) CURSQLID(ADMF001)
```

The output is similar to the following example:

```
DSNX221I -DB2A DSNXESTC DYNAMIC QUERY CAPTURE FOR
COMMAND NUMBER 3 STARTED SUCCESSFULLY.
DSNX222I -DB2A DSNXESC1 DYNAMIC QUERY CAPTURE
COMPLETED FOR COMMAND NUMBER 3 WITH 20 STATEMENTS SCHEDULED,
20 STATEMENTS STABILIZED, AND 0 STATEMENTS ALREADY STABILIZED.
```

Stabilize all queries in the dynamic cache of each member in the data sharing group that have been executed at least 200 times
You issue the following command:

```
-STA DYNQUERYCAPTURE STBLGRP(DEF) THRESHLD(200) SCOPE(GROUP)
```

The output is similar to the following example. The numbers in the output are accumulated from all members in the data sharing group:

```
DSNX221I -DB2A DSNXESTC DYNAMIC QUERY CAPTURE FOR
COMMAND NUMBER 2 STARTED SUCCESSFULLY.
DSNX222I -DB2A DSNXESC1 DYNAMIC QUERY CAPTURE
COMPLETED FOR COMMAND NUMBER 2 WITH 50 STATEMENTS SCHEDULED,
50 STATEMENTS STABILIZED, AND 3 STATEMENTS ALREADY STABILIZED.
```

Output

Message DSNX221I is issued when the START DYNQUERYCAPTURE command contains no syntax errors.

Message DSNX222I is issued at the completion of processing for the START DYNQUERYCAPTURE command.

Message DSNX223I is issued if a previous START DYNQUERYCAPTURE command specified the same SQLID.

Related concepts
Dynamic SQL plan stability (Db2 Performance)
Related tasks
Stabilizing access paths for dynamic SQL statements (Db2 Performance)
Related reference
-STOP DYNQUERYCAPTURE command (Db2)

The Db2 command STOP DYNQUERYCAPTURE stops the capture of dynamic SQL statements by the specified monitors.

-DISPLAY DYNQUERYCAPTURE command (Db2)
The Db2 command DISPLAY DYNQUERYCAPTURE displays all currently active dynamic query capture monitors.

FREE STABILIZED DYNAMIC QUERY subcommand (DSN)
The DSN subcommand FREE STABILIZED DYNAMIC QUERY removes from certain catalog tables one or more stabilized dynamic queries. If any of the specified queries are in the dynamic statement cache, FREE STABILIZED DYNAMIC QUERY also purges the statements from the dynamic statement cache.

Related information

DSNX221I (Db2 Messages)
DSNX222I (Db2 Messages)
DSNX223I (Db2 Messages)

Chapter 77. -START FUNCTION SPECIFIC command (Db2)

The Db2 command START FUNCTION SPECIFIC starts an external function that is stopped. Built-in functions or user-defined functions that are sourced on another function cannot be started with this command.

On successful completion of the command, queued requests for the specified functions begin executing. The abend counts for those functions are set to zero.

You do not need to issue the START FUNCTION SPECIFIC command when defining a new function to Db2. Db2 automatically starts the new function on the first SQL statement that invokes the new function.

Historical statistics in the DISPLAY FUNCTION SPECIFIC report (MAXQUE, TIMEOUT) are reset each time a START FUNCTION SPECIFIC command is issued for a given function.

Abbreviation: -STA FUNC SPEC

Environment

This command can be issued from a z/OS console, a DSN session under TSO, a DB2I panel, an IMS or CICS terminal, or a program that uses the instrumentation facility interface (IFI).

Data sharing scope: Group or member

Authorization

To execute this command, you must use a privilege set of the process that includes one of the following authorities for each function:

- Ownership of the function
- RECOVER privilege
- System DBADM authority
- SYSOPR authority
- SYSCTRL authority
- SYSADM authority

If you specify START FUNCTION SPECIFIC *.* or *schema.partial-name* *, the privilege set of the process must include one of the following authorities:

- SYSOPR authority
- SYSCTRL authority
- SYSADM authority

Db2 commands that are issued from a logged-on z/OS console or TSO SDSF can be checked by Db2 authorization using primary and secondary authorization IDs. A logged-on z/OS user ID must be defined in RACF or a similar security server.

© Copyright IBM Corp. 1983, 2024

Syntax

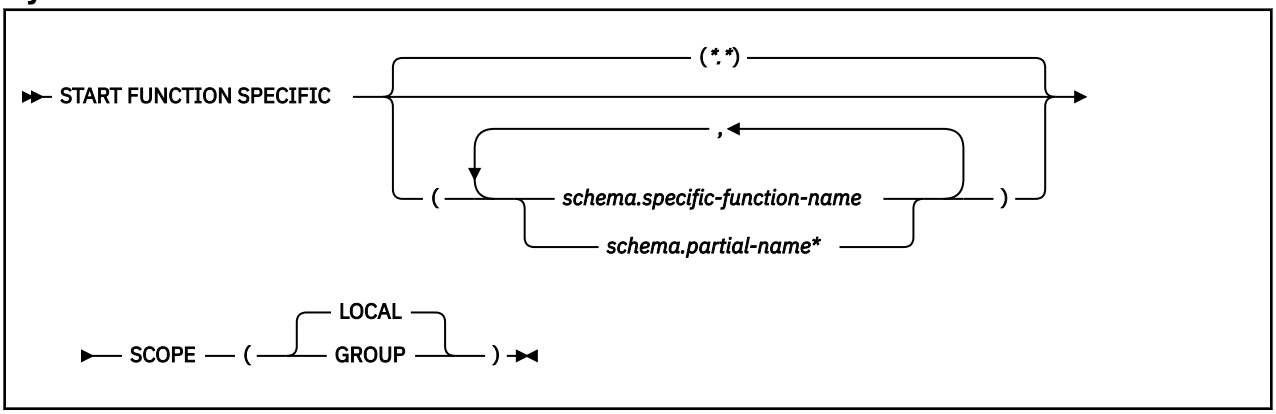

Option descriptions

*** (asterisk)(*.*)**
Starts all functions in all schemas. This is the default.

(*schema.specific-function-name*)
Starts the specific function name in the schema. You cannot specify a function name in the same way that you do in SQL; you must use the specific name. If a specific name was not specified on the CREATE FUNCTION statement, query SYSIBM.SYSROUTINES for the correct specific name:

```
SELECT SPECIFICNAME, PARM_COUNT
  FROM SYSIBM.SYSROUTINES
   WHERE NAME='function_name'
    AND SCHEMA='schema_name';
```

For overloaded functions, this query can return multiple rows.

(*schema.partial-name* *)
Starts all functions or a set of functions in the specified schema. The specific names of all functions in the set begin with *partial-name* and can end with any string, including the empty string. For example, schema1.ABC* starts all functions with specific names that begin with ABC in schema1.

SCOPE
Specifies the scope of the command.

(LOCAL)
Specifies that the command applies only to the current member.

(GROUP)
Specifies that the command applies to all members of the data sharing group.

Usage notes

Language Environment in the WLM-established stored procedure address space
The START FUNCTION SPECIFIC command does not refresh the Language Environment in the WLM-established stored procedure address space. You must issue the WLM command. For example, if you need to refresh the Language Environment to get new copies of user-defined function load modules, issue the following WLM command:

```
VARY WLM, APPLENV=applenv,REFRESH
```

Considerations for SQL functions
The START FUNCTION SPECIFIC command affects all versions of the SQL functions that you specify in the command.

Trace information for commands issued with group scope
If this command is issued with options that specify group scope in a Db2 data sharing member, it also runs on all other active members. IFICID 090 trace records for other group members can show that

the same command was issued by the SYSOPR authorization ID from the 016.TLPKN5F correlation ID, in addition to the trace records from the member where the original command was issued. See Command scope in Db2 data sharing (Db2 Data Sharing Planning and Administration).

Examples

Example 1: Start all functions.

```
-START FUNCTION SPECIFIC
```

Output that is similar to the following output is generated:

```
DSNX973I - DSNX9ST2 START FUNCTION SPECIFIC SUCCESSFUL FOR *.*
DSN9022I - DSNX9COM '-START FUNC' NORMAL COMPLETION
```

Example 2: Start functions USERFN1 and USERFN2. If any requests are queued for these functions, the functions are executed.

```
-START FUNCTION SPECIFIC(PAYROLL.USERFN1,PAYROLL.USERFN2)
```

Output that is similar to the following output is generated:

```
DSNX973I - DSNX9ST2 START FUNCTION SPECIFIC SUCCESSFUL FOR
PAYROLL.USERFN1
DSNX973I - DSNX9ST2 START FUNCTION SPECIFIC SUCCESSFUL FOR
PAYROLL.USERFN2
DSN9022I - DSNX9COM '-START FUNC' NORMAL COMPLETION
```

Chapter 78. START *irlmproc* command z/OS IRLM)

The START *irlmproc* command starts an IRLM component with a procedure that is defined by the installation. Symbolic parameters in the procedure can be overridden on the START *irlmproc* command.

Environment

This command can be issued only from a z/OS console.

Data sharing scope: Member

Authorization

The command requires an appropriate level of operating system authority.

Syntax

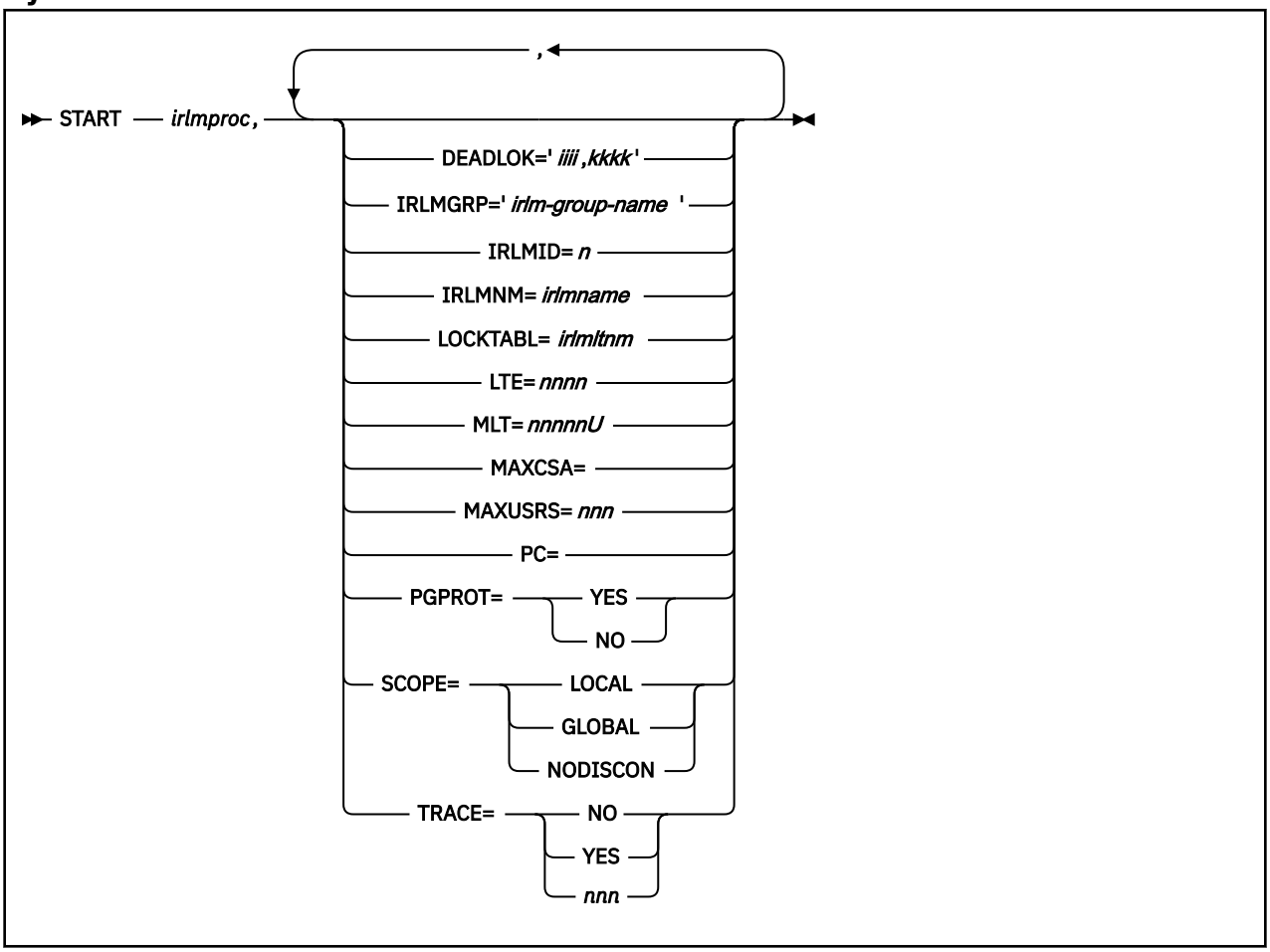

Options must be separated by commas, with no spaces.

Option descriptions

irlmproc
Specifies the procedure name of the IRLM to be started.

None of the following options are required:

© Copyright IBM Corp. 1983, 2024

DEADLOK=' *iiii,kkkk* '

Specifies the local deadlock-detection interval in seconds (*iiii*), and the number of local cycles (*kkkk*) that are to occur before a global detection is initiated.

iiii

Is a one- to four-digit number. Values in the range 1–5 are interpreted as seconds. Values in the range 100–5000 are interpreted as milliseconds. Depending on the value that you enter, IRLM might substitute a smaller maximum value.

kkkk

Is a one- to four-digit number from 1 to 9999 that specifies the number of local deadlock cycles that must expire before global deadlock detection is performed. You can specify any value from 1 to 9999, but IRLM uses 1. The recommended value to specify is 1.

In a data sharing environment, IRLM synchronizes all of the DEADLOK values in the group to the values specified on the most recent IRLM to join the group. The DEADLOK values can be changed by starting a member with the values that you want. To reduce confusion, it is recommended that the installation specify the same value for DEADLOK on all of its IRLM startup procedures and use the START *irlmproc* command to override this value only when the interval must be increased from its original value.

IRLMGRP=' *irlm-group-name* '

Specifies the name of the cross system coupling facility (XCF) group, in a data sharing environment, to which the IRLM belongs as the lock manager for DBMSs that share the same data. All IRLMs in the same group must specify the same value for LOCKTABL and unique values for IRLMID.

The group name is used as the XCF group name. The name must not start with 'SYS' and must not be the same name specified for LOCKTABL.

In a non-data-sharing environment (SCOPE=LOCAL), IRLMGRP is ignored.

IRLMID= *n*

Specifies a decimal number that is used to distinguish between IRLMs in a data sharing group.

n can be either a one- to three-digit number from 1 to 255, or a printable character in quotation marks. Note that this IRLM ID does not relate directly to the limit of IRLM members that can be in the group. That limit is determined by the current hardware limits (currently 32).

When *n* is specified as a printable character, IRLM uses the EBCDIC value of the printable character as the IRLMID (such as X'C4'). The printable character must be surrounded by enough single quotes to permit IRLM to see it as a printable character. Because of the way that the operating system interprets quotes, single quotes must be on either side of the characters. For example, if you want to specify the printable character 'D', you must specify it here as IRLMID='D'.

A unique IRLMID must be specified for each IRLM in a group (IRLMs with the same value specified for the IRLMGRP option).

IRLMNM= *irlmname*

Specifies a 4-byte z/OS subsystem name assigned to this IRLM. (Although z/OS can accept names that are less than 4 bytes, IRLM requires a 4-byte name.)

LOCKTABL= *irlmltnm*

Specifies the lock table to be used by this group. This option is overridden by Db2; it is needed in an IMS environment.

In a non-data-sharing environment (SCOPE=LOCAL), LOCKTABL is ignored.

LTE= *nnnn*

Specifies the number of lock table entries that are required in the coupling facility (CF) lock structure in units of 1048576 entries. LTE= can have a value of blank, zero, or any exact power of two up to 2048 (inclusive). The number of lock table entries in the group is determined by the first IRLM to connect to the group during initial structure allocation or during REBUILD.

The LTE value is used in the following order:

1. The value that is specified using MODIFY *irlmproc*,SET,LTE= if the value is greater than zero.
2. The value from LTE= in the *irlmproc* if the value is greater than zero.
3. The value that is determined by the existing logic, which divides the XES structure size returned on the IXCQUERY call by two times LTE width. The result is rounded to the nearest power of two, which the existing logic uses for the value.

   The LTE width is determined by the MAXUSRS value. See the MAXUSRS description below for additional information.

If IRLM attempts to use a value from MODIFY *irlmproc*,SET,LTE= that is greater than the available storage in the structure size returned by XES IXCQUERY, the value for the LTE= in the irlmproc is used. If this value is greater than the available storage, IRLM uses the value that is determined by the existing logic.

Table 21. Some common values for lock table entries and the required lock table storage

For LTE=	Lock Table Storage needed for 2-byte entries	Lock Table Storage needed for 4-byte entries
8	16 MB	32 MB
16	32 MB	64 MB
32	64 MB	128 MB
64	128 MB	256 MB
128	256 MB	512 MB
256	512 MB	1024 MB

MLT= *nnnnnU*
Specifies the upper limit of private storage above the two gigabyte bar, also called the MEMLIMIT, that is managed by MVS. This storage is used for locks and deadlock processing. The value *nnnnn* is a five digit number in the range 1 through 99999. *U* is a one character unit indicator with the value of M for megabytes, G for gigabytes, T for terabytes, or P for petabytes. The MLT value that is specified for IRLM must be at least 2 GB. The setting of the MEMLIMIT value through the MLT parameter is temporary, holding only as long as the execution of the IRLM instance. To make a permanent MEMLIMIT change, update the MEMLIMIT value in the corresponding IRLM startup procedure.

MAXCSA=
MAXCSA= is a required positional parameter but is currently unused.

MAXUSRS= *nnn*
Specifies the initial maximum number of members in the data sharing group, set by the IRLM which results in structure allocation. The specified value determines the size of each lock entry in the lock table portion of the lock structure, as shown in the following table.

Table 22. Effect of MAXUSRS on initial widths of lock table entries

MAXUSRS value range	Initial width of each LTE
7 or less	2 bytes
≥ 8 and < 24	4 bytes
≥ 24 and < 33	8 bytes

nnn must be a one- to two-digit number from 1 to 32. The default is 7. The recommended value is 7 or less.

In a non-data-sharing environment (SCOPE=LOCAL), MAXUSRS is ignored.

Important: The lock table entry (LTE) width does not change when the number of lock table entries changes. To increase the LTE width, you first need to perform these steps:

1. Perform the following steps on each member of the data sharing group.
   a. Increase the MAXUSRS value to a value in a higher MAXUSRS range. For example, if MAXUSRS is changed from 7 to 8, the value is in a higher MAXUSRS range.
   b. Restart the data sharing group member.

   You can perform the steps above on all members at the same time, or serially, over a period of time.
2. Rebuild the lock structure for the data sharing group.

When MAXUSRS is changed to a value in a lower MAXUSRS range (for example, from 8 to 7), the LTE width does not change as long as the lock structure remains allocated. To reduce the LTE width, you need to perform these steps:

1. Shut down the data sharing group.
2. Deallocate the lock structure by issuing the z/OS SETXCF FORCE command. For more information, see Deallocating structures by force (Db2 Data Sharing Planning and Administration).
3. Restart the data sharing group.

PC=
PC= is a required positional parameter but is currently unused.

PGPROT=
Specifies whether the IRLM load modules that are resident in common storage are placed in z/OS page-protected storage.

YES
The IRLM load modules that are resident in common storage are placed in z/OS page-protected storage.

NO
The IRLM load modules that are resident in common storage are not placed in z/OS page-protected storage.

SCOPE=
Specifies whether the IRLM is to be used in a data sharing environment.

LOCAL
Specifies the IRLM is in a non-data-sharing environment and there is no intersystem sharing.

GLOBAL
Specifies the IRLM is in a data sharing environment and that intersystem sharing is to be performed.

NODISCON
Specifies that IRLM is in a data sharing environment and that intersystem sharing is to be performed. IRLM remains connected to the data sharing group even when no database management systems are identified to it. You must explicitly stop IRLM to bring it down.

If you specify the NODISCON option, there is less impact on other systems when a Db2 subsystem fails because the operating system is not required to perform certain recovery actions that it normally performs when IRLM comes down. Using the NODISCON option might allow Db2 to restart more quickly after a Db2 subsystem normally or abnormally terminates because it does not have to wait for IRLM to rejoin the IRLM data sharing group.

TRACE=
Specifies whether the IRLM is to capture traces in wrap-around IRLM buffers. Each buffer is reused when the previous buffer is filled. Traces are captured at IRLM startup. You should specify TRACE=YES in the *irlmproc* procedure to place traces in wrap-around mode.

NO
Does not initialize trace activity during IRLM startup. NO is the default.

The TRACE CT command can be used to trace IRLM activity after IRLM startup.

YES
Initializes IRLM trace activity during startup.

nnn
Specifies the number of z/OS component trace (CTRACE) buffers, and initializes all IRLM CTRACE activities during startup. *nnn* must be in the range 10 to 255.

Examples

Example: This command starts the IRLM with a lock table storage size of 64 MB, assuming a width of 2-bytes for each lock table entry.

Enter the following command on the system console:

```
S irlmproc,LTE=32
```

If this value is correct, message DXR132I, which is displayed after successful connection to the lock structure, displays the value used by IRLM. If this value is incorrect, START will terminate with DXR116E CODE=24 and ABENDU2018. This value is only used if SCOPE=GLOBAL or SCOPE=NODISCON and has a default value calculated by IRLM.

Chapter 79. -START ML command (Db2)

The Db2 command START ML starts the Db2 functions used by IBM Db2 AI for z/OS.

Abbreviation: -STA ML

Environment

This command can be issued from a z/OS console, a DSN session under TSO, a DB2I panel (DB2 COMMANDS), an IMS or CICS terminal, or a program using the instrumentation facility interface (IFI).

Data sharing scope: Group

Authorization

To execute this command, you must use a privilege set of the process that includes one of the following authorities:

- SQLADM authority
- System DBADM authority
- SYSOPR authority
- SYSCTRL authority
- SYSADM authority

Db2 commands that are issued from a logged-on z/OS console or TSO SDSF can be checked by Db2 authorization using primary and secondary authorization IDs. A logged-on z/OS user ID must be defined in RACF or a similar security server.

Syntax

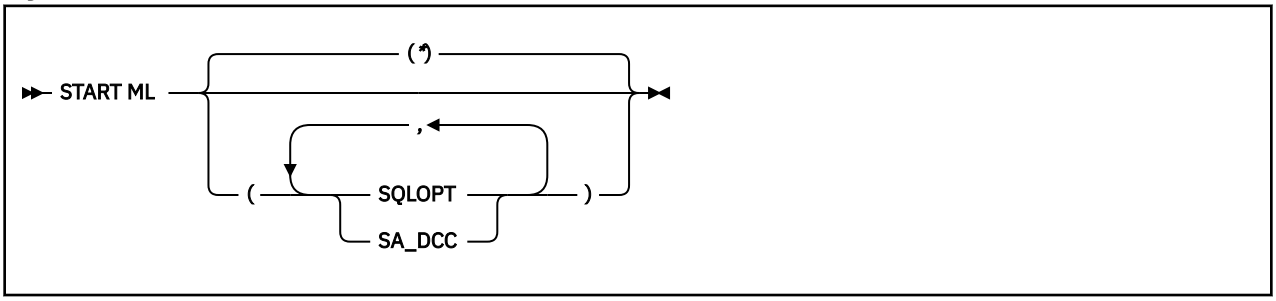

Option descriptions

*****
Activates all Db2 functions used by IBM Db2 AI for z/OS. This is the default.

SQLOPT
Activates the SQL optimization function of IBM Db2 AI for z/OS.

SA_DCC
Activates data collection for both the system assessment and distributed connection control functions of IBM Db2 AI for z/OS.

Usage note

The START ML command activates IBM Db2 AI for z/OS. In a data sharing environment, this command activates IBM Db2 AI for z/OS on all members in the data sharing group.

© Copyright IBM Corp. 1983, 2024

Examples

Example 1

Activate all Db2 functions used by IBM Db2 AI for z/OS in all members of the data sharing group.

```
-START ML
```

Example 2

Activate all Db2 functions used by IBM Db2 AI for z/OS in all members of the data sharing group.

```
-START ML (*)
```

Example 3

Activate the SQL optimization function of IBM Db2 AI for z/OS in all members of the data sharing group.

```
-START ML (SQLOPT)
```

Related reference

"-STOP ML command (Db2)" on page 551
The Db2 command STOP ML stops the Db2 functions used by IBM Db2 AI for z/OS, if IBM Db2 AI for z/OS has already been started.

"-DISPLAY ML command (Db2)" on page 265
The Db2 command DISPLAY ML displays the current status of IBM Db2 AI for z/OS.

Chapter 80. -START PROCEDURE command (Db2)

The Db2 command START PROCEDURE activates the definition of a stored procedure that is stopped or refreshes one that is stored in the cache. You can qualify stored procedure names with a schema name.

On successful completion of the command, queued requests for the specified stored procedures begin to execute. The abend counts for the specified procedures are set to zero. Db2 resets the MAXQUE and TIMEOUT statistics to 0 each time that you execute the START PROCEDURE command.

You do not need to issue START PROCEDURE when you define a new stored procedure to Db2. Db2 automatically activates the new definition when it first receives an SQL CALL statement for the new procedure.

Abbreviation: -STA PROC

Environment

This command can be issued from a z/OS console, a DSN session under TSO, a DB2I panel (DB2 COMMANDS), an IMS or CICS terminal, or a program using the instrumentation facility interface (IFI).

Data sharing scope: Group or member

Authorization

To execute this command, you must use a privilege set of the process that includes one of the following authorities:

- Ownership of the stored procedure
- System DBADM authority
- SYSOPR authority
- SYSCTRL authority
- SYSADM authority

Db2 commands that are issued from a logged-on z/OS console or TSO SDSF can be checked by Db2 authorization using primary and secondary authorization IDs. A logged-on z/OS user ID must be defined in RACF or a similar security server.

Syntax

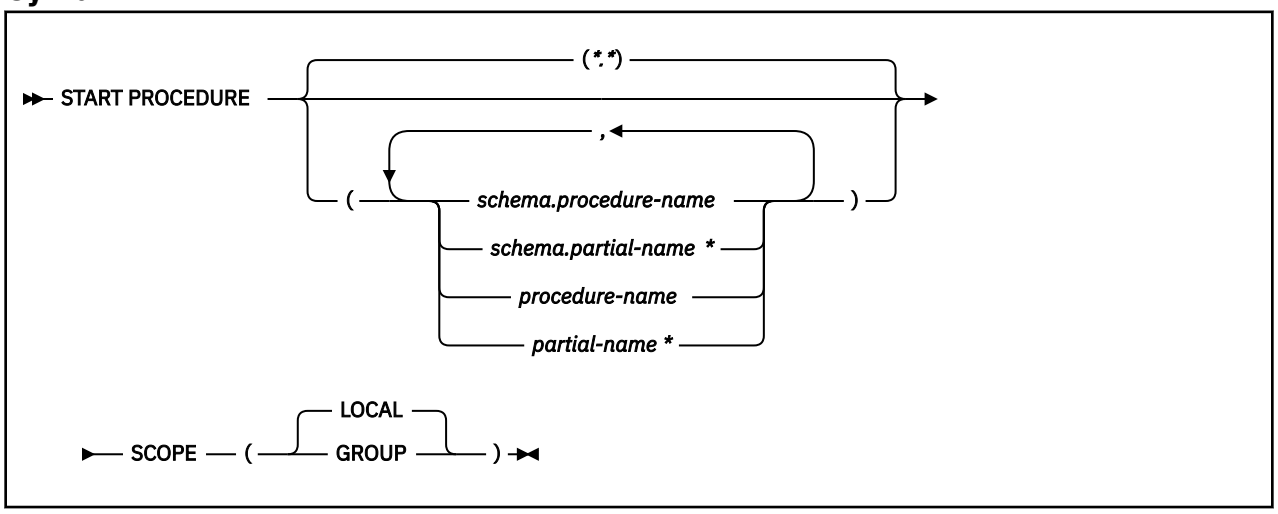

© Copyright IBM Corp. 1983, 2024

Option descriptions

(*.*)
Marks all stored procedures in all schemas as available to be called.

(*schema.procedure-name*)
Starts the specified stored procedure in the specified schema.

(*schema.partial-name* *)
Starts a set of stored procedures in the specified schema. The names of all procedures in the set begin with *partial-name* and can end with any string, including the empty string. For example, PAYROLL.ABC* starts all stored procedures with names that begin with ABC in the PAYROLL schema.

procedure-name
Marks one or more specific stored procedures as available to be called.

***partial-name* ***
Marks a set of stored procedures in the SYSPROC schema as available to be called. The names of all procedures in the set begin with *partial-name* and can end with any string, including the empty string. For example, ABC* starts all stored procedure names that begin with ABC in the SYSPROC schema.

SCOPE
Specifies the scope of the command.

(LOCAL)
Starts the specified stored procedures in only the local members.

(GROUP)
Starts the specified stored procedures in all members of the data sharing group.

Usage notes

Errors in a definition of a stored procedure
Errors are detected at create time for a stored procedure.

Considerations for native SQL procedures
The START PROCEDURE command affects all versions of the native SQL procedures that you specify in the command.

Trace information for commands issued with group scope
If this command is issued with options that specify group scope in a Db2 data sharing member, it also runs on all other active members. IFICID 090 trace records for other group members can show that the same command was issued by the SYSOPR authorization ID from the 016.TLPKN5F correlation ID, in addition to the trace records from the member where the original command was issued. See Command scope in Db2 data sharing (Db2 Data Sharing Planning and Administration).

Examples

Example 1: Start all stored procedures.

```
-START PROCEDURE
```

This command produces output that is similar to the following output:

```
DSNX946I - DSNX9ST2 START PROCEDURE SUCCESSFUL FOR *.*
DSN9022I - DSNX9COM '-START PROC' NORMAL COMPLETION
```

Example 2: Make the stored procedures USERPRC1 and USERPRC2 available to be called, and start any requests that are waiting for those procedures.

```
-START PROCEDURE(USERPRC1,USERPRC2)
```

This command produces output that is similar to the following output:

```
DSNX946I - DSNX9ST2 START PROCEDURE SUCCESSFUL FOR USERPRC1
DSNX946I - DSNX9ST2 START PROCEDURE SUCCESSFUL FOR USERPRC2
DSN9022I - DSNX9COM '-START PROC' NORMAL COMPLETION
```

Chapter 81. -START PROFILE command (Db2)

The Db2 command START PROFILE loads or reloads the profile table into a data structure in memory.

Important: If the value of the PROFILE_AUTOSTART subsystem parameter is set to YES, the START PROFILE command is issued automatically as part of Db2 start processing.

Tip: For best results, do not issue a STOP PROFILE command when you add or modify existing profiles. Use the STOP PROFILE command only if you intend to disable all existing profiles.

If the profile tables data structure already exists when a START PROFILE command executes, Db2 deletes it, and a new structure is created. After loading the database, the functions specified in the profile tables become active. Only the rows in the profile table with column PROFILE_ENABLED='Y' are activated.

Db2 supports a maximum of 4096 active DSN_PROFILE_TABLE rows.

Important: Always check the status of any newly added profile table rows in the STATUS columns of DSN_PROFILE_HISTORY and DSN_PROFILE ATTRIBUTES_HISTORY tables after you issue the START PROFILE command. Successful completion of the START PROFILE command does not imply that all profiles started successfully. If the STATUS column of either history table contains a value that does not start with 'ACCEPTED', further action is required to enable the profile or the keyword action.

Abbreviation: -STA PROFILE

Environment

This command can be issued from the z/OS console, through a batch job or the instrumentation facility interface (IFI).

Data sharing scope: Member

Authorization

To execute this command, you must use a privilege set of the process that includes one of the following authorities:

- SQLADM authority
- System DBADM authority
- SYSOPR authority
- SYSCTRL authority
- SYSADM authority

Syntax

```
►►─ START PROFILE ─►◄
```

Example

This command is required to load the profile table into memory.

```
-START PROFILE
```

Related tasks

Monitoring and controlling Db2 by using profile tables (Db2 Administration Guide)

Related reference

PROFILE AUTOSTART field (PROFILE_AUTOSTART subsystem parameter) (Db2 Installation and Migration)

© Copyright IBM Corp. 1983, 2024

Profile tables (Db2 Performance)

Chapter 82. -START RLIMIT command (Db2)

The Db2 command START RLIMIT starts the resource limit facility (governor) and specifies a resource limit specification table for the facility to use.

You can issue START RLIMIT even if the resource limit facility or resource limit table is already active. Db2 reads resource limit tables into memory to use for START RLIMIT command processing. When you update the active resource limit tables, Db2 detects the resource limit changes and automatically refreshes the in-memory resource limit tables with these changes.

Deprecated function: The following resource limit table formats are deprecated:

- Starting in Db2 12, DSNRLST*xx* table formats and related index formats from before DB2 version 8 format are not supported. When Db2 detects DSNRLST*xx* tables with unsupported formats, it issues message DSNT731I.
- DSNRLMT*xx* table formats and related index formats from before Db2 11 are deprecated. In Db2 12, if Db2 detects DSNRLMT*xx* tables in a deprecated format, it issues message DSNT732I, processing for the START RLIMIT command continues, and the resource limit facility starts using the deprecated objects.

For more information, see Convert RLF tables to the current format (Db2 Installation and Migration).

Abbreviation: -STA RLIM

Environment

This command can be issued from a z/OS console, a DSN session under TSO, a DB2I panel (DB2 COMMANDS), an IMS or CICS terminal, or a program using the instrumentation facility interface (IFI).

Data sharing scope: Group or member

Authorization

To execute this command, you must use a privilege set of the process that includes one of the following authorities:

- SYSOPR authority
- SYSCTRL authority
- SYSADM authority

Db2 commands that are issued from a logged-on z/OS console or TSO SDSF can be checked by Db2 authorization using primary and secondary authorization IDs. A logged-on z/OS user ID must be defined in RACF or a similar security server.

Syntax

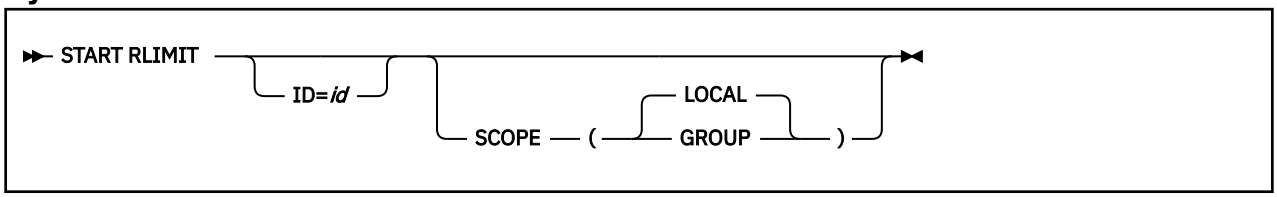

Option description

The following keywords are optional.

ID= *id*
Identifies the resource limit specification table for the governor to use.

© Copyright IBM Corp. 1983, 2024

id is the one or two identification character that is specified when the table is created. You can start a resource limit table that is already active by specifying the same ID that was specified in the last START RLIMIT command.

The full name of the table is *authid*.DSNRLST*id* or *authid*.DSNRLMT*id*, where *authid* is the value that is specified in field RESOURCE AUTHID on installation panel DSNTIPP.

The **default** ID is specified by the value of the RLFTBL subsystem parameter.

SCOPE
Specifies the scope of the command in a data sharing group.

(LOCAL)
Starts the resource limit facility for the local member only. This is the default value.

(GROUP)
Starts the resource limit facility for the entire data sharing group.

Usage notes

Trace information for commands issued with group scope
If this command is issued with options that specify group scope in a Db2 data sharing member, it also runs on all other active members. IFICID 090 trace records for other group members can show that the same command was issued by the SYSOPR authorization ID from the 016.TLPKN5F correlation ID, in addition to the trace records from the member where the original command was issued. See Command scope in Db2 data sharing (Db2 Data Sharing Planning and Administration).

Examples

Example 1
Start the resource limit facility using the DSNRLST01 resource limit table.

```
-START RLIMIT ID=01
```

Example 2
Start the resource limit facility using the DSNRLST01 resource limit table for all members of the data sharing group.

```
-START RLIMIT ID=01 SCOPE(GROUP)
```

Related tasks
Setting limits for system resource usage by using the resource limit facility (Db2 Performance)
Starting and stopping resource limit tables (Db2 Performance)
Limiting resource usage for packages (Db2 Performance)
Limiting resource usage by client information (Db2 Performance)

Related reference
-STOP RLIMIT command (Db2)
The Db2 command STOP RLIMIT stops the resource limit facility.

-DISPLAY RLIMIT command (Db2)
The Db2 command DISPLAY RLIMIT displays the current status of the resource limit facility (governor).

DSNRLSTxx resource limit tables (Db2 Performance)
DSNRLMTxx resource limit tables (Db2 Performance)
DSNTIPP: Protection panel (Db2 Installation and Migration)
RLST NAME SUFFIX field (RLFTBL subsystem parameter) (Db2 Installation and Migration)

Chapter 83. -START RESTSVC command (Db2)

The Db2 command START RESTSVC starts the definition of a REST service that is stopped. You can qualify REST service names with a collection ID name.

On successful completion of the command, the specified REST services will be started and any new requests for the specified REST services can begin to execute.

When a new REST service is created, Db2 automatically starts the new REST service.

Abbreviation: -STA RESTSVC

Environment

This command can be issued from a z/OS console, a DSN session under TSO, a DB2I panel (Db2 COMMANDS), an IMS or CICS terminal, or a program using the instrumentation facility interface (IFI).

Data sharing scope: Group

Authorization

To execute this command, you must use a privilege set of the process that includes one of the following authorities:

- System DBADM authority
- SYSOPR authority
- SYSCTRL authority
- SYSADM authority

Db2 commands that are issued from a logged-on z/OS console or TSO SDSF can be checked by Db2 authorization using primary and secondary authorization IDs. A logged-on z/OS user ID must be defined in RACF or a similar security server.

Syntax

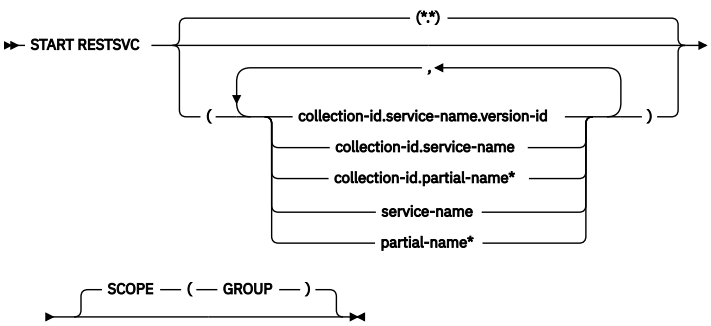

Option descriptions

For mixed case names, use single quotes (') around the input.

(*.*)
Marks all versions of all REST services in all collection-ids as available to be invoked. Note: when specified, *.* can be the only RESTSVC parameter.

(collection-id.service-name.version-id)
Starts a specific version of the specified REST service in the specified collection-id.

© Copyright IBM Corp. 1983, 2024

(collection-id.service-name)
Starts all versions of the specified REST service in the specified collection-id.

(collection-id.partial-name*)
Starts all versions in a set of REST services in the specified collection-id. The names of all REST services in the set begin with partial-name and can end with any string, including the empty string. For example, PAYROLL.ABC* starts all REST services with names that begin with ABC in the PAYROLL collection-id.

(service-name)
Starts all versions of the specified REST service in the SYSIBMSERVICE collection-id.

(partial-name*)

Starts all versions in a set of REST services in the SYSIBMSERVICE collection-id. The names of all REST services in the set begin with partial-name and can end with any string, including the empty string. For example, ABC* starts all REST services names that begin with ABC in the SYSIBMSERVICE collection-id.

SCOPE
Specifies the scope of the command.

(GROUP)
Starts the specified REST services in all members of the data sharing group.

Usage notes

Errors in a definition of a REST service
Errors are detected at create time for a REST service created with the VALIDATE(BIND) BIND option, and a discover or invoke time for a REST service created with VALIDATE(RUN) BIND option.

Trace information for commands issued with group scope
If this command is issued with options that specify group scope in a Db2 data sharing member, it also runs on all other active members. IFICID 090 trace records for other group members can show that the same command was issued by the SYSOPR authorization ID from the 016.TLPKN5F correlation ID, in addition to the trace records from the member where the original command was issued. See Command scope in Db2 data sharing (Db2 Data Sharing Planning and Administration).

The START RESTSVC command affects all versions of the REST services that you specify in the command.

Output

Message DSNL601I (Db2 Messages) indicates the beginning of the output of a START RESTSVC command. Message DSN9022I (Db2 Messages) will indicate the end of the output of the command if no failure occurred during the processing of the command. Message DSN9023I (Db2 Messages) will indicate the end of the output of the command if an abend had occurred during the processing of the command.

Examples

Example: No authority for a START RESTSVC command
The following command attempts to use the START RESTSVC command on a service that the user does not have the proper authorities for:

```
-DB2A STA RESTSVC('DB2zRESTServiceTestCollectionID.simpleSelect3')
```

The output is similar to this output:

```
DSNL601I  -DB2A STA RESTSVC REPORT FOLLOWS-
DSNL604I  -DB2A USER HAS INSUFFICIENT AUTHORITY FOR START RESTSVC OF
DB2zRESTServiceTestCollectionID.simpleSelect3
DSN9022I  -DB2A DSNLJDSS 'START RESTSVC' NORMAL COMPLETION
```

Example: Start all services within a collection ID

The following command starts all services with the *BankDemo* collection ID name:

```
-DB2A STA RESTSVC('BankDemo.*')
```

The output is similar to this output:

```
DSNL601I  -DB2A STA RESTSVC REPORT FOLLOWS-
DSNL607I  -DB2A ALL SERVICES HAVE BEEN START FOR BankDemo.*
DSN9022I  -DB2A DSNLJDSS 'START RESTSVC' NORMAL COMPLETION
```

Related reference

BIND SERVICE subcommand (DSN)
The BIND SERVICE (DSN) subcommand builds an application package that represents a Db2 REST service. Db2 records the description of the service in the catalog tables and saves the prepared package in the directory.

BIND and REBIND options for packages, plans, and services
There are several options you can use for binding or rebinding packages, plans, and services. Some of the options are common for both BIND and REBIND operations.

-DISPLAY RESTSVC command (Db2)
The Db2 command DISPLAY RESTSVC displays the status of REST services that exist in Db2.

FREE SERVICE command (DSN)
The FREE SERVICE (DSN) subcommand deletes an application package that represents a Db2 REST service. The command also removes the corresponding entry from the catalog tables.

-STOP RESTSVC command (Db2)
The Db2 command STOP RESTSVC prevents Db2 from accepting any new discover details or invoke requests for one or more REST services. You can qualify REST service names with a collection ID name.

Chapter 84. -START TRACE command (Db2)

The Db2 command START TRACE starts Db2 traces.

An additional option for this command and additional values for a few other options exist. This additional information is intended for service and use under the direction of IBM Support.

Abbreviation: -STA TRA

Environment

This command can be issued from a z/OS console, a DSN session, a DB2I panel (DB2 COMMANDS), an IMS or CICS terminal, or a program using the instrumentation facility interface (IFI).

Data sharing scope: Group or member

Authorization

To execute this command, you must use a privilege set of the process that includes one of the following privileges or authorities:

- TRACE privilege
- SQLADM authority
- System DBADM authority
- SYSOPR authority
- SYSCTRL authority
- SYSADM authority
- SECADM authority

Db2 commands that are issued from a logged-on z/OS console or TSO SDSF can be checked by Db2 authorization using primary and secondary authorization IDs. A logged-on z/OS user ID must be defined in RACF or a similar security server.

Syntax

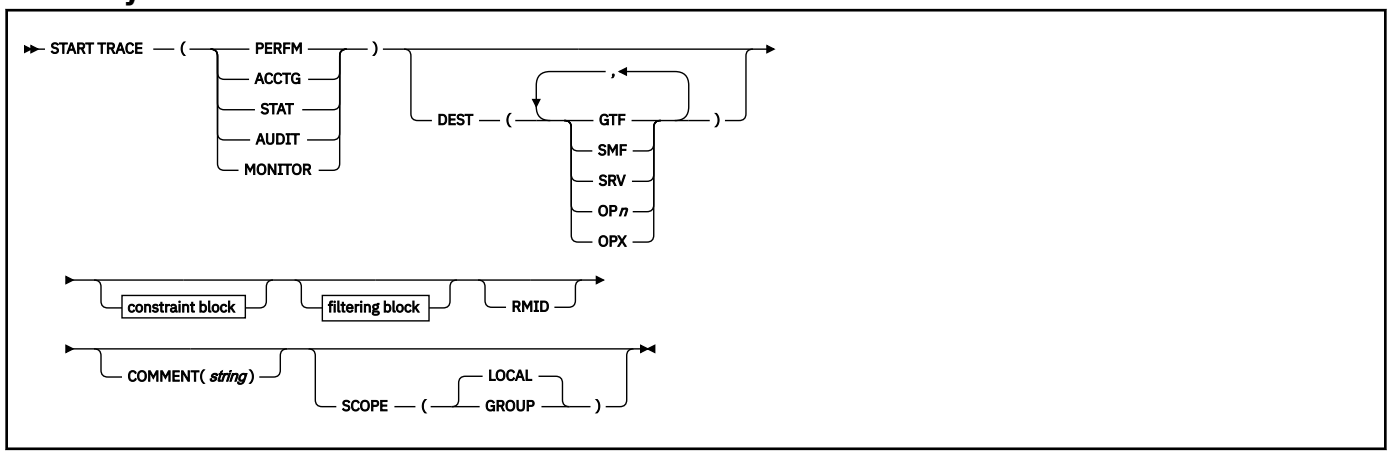

© Copyright IBM Corp. 1983, 2024

constraint block

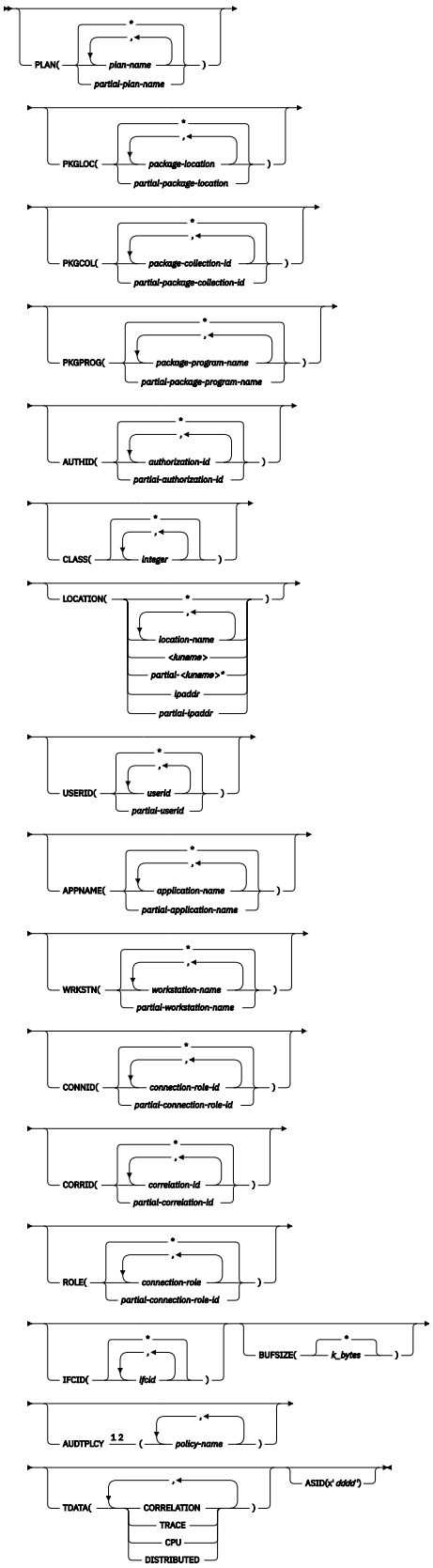

Notes:

[1] Do not specify CLASS or IFCID with AUDTPLCY. AUDTPLCY applies to trace type AUDIT.

[2] Specifying multiple AUDTPLCY traces with different filtering criteria causes the filtering to become a UNION among all AUDTPLCY traces.

filtering block

```
XPLAN( plan-name , | partial-plan-name )
XPKGLOC( package-location , | partial-package-location )
XPKGCOL( package-collection-id , | partial-package-collection-id )
XPKGPROG( package-program-name , | partial-package-program-name )
XAUTHID( authorization-id , | partial-authorization-id )
XLOC( location-name , | partial-location-name | <luname> | partial-<luname>* | ipaddr | partial-ipaddr )
XUSERID( userid , | partial-userid )
XAPPNAME( application-name , | partial-application-name )
XWRKSTN( workstation-name , | partial-workstation-name )
XCONNID( connection-role-id , | partial-connection-role-id )
XCORRID( correlation-id , | partial-correlation-id )
XROLE( connection-role , | partial-connection-role-id )
```

Option descriptions

You must specify a trace type.

The options PERFM, ACCTG, STAT, AUDIT, and MONITOR identify the type of trace that is started.

(PERFM)
The *performance trace* is intended for performance analysis and tuning. This trace includes records of specific events in the system, including events related to distributed data processing. The data can be used for program, resource, user, and subsystem-related tuning.

Abbreviation: P

(ACCTG)
The *accounting trace* records transaction-level data that is written when the processing for a transaction is completed. It provides data that enables you to conduct Db2 capacity planning and to tune application programs.

Abbreviation: A

(STAT)
The *statistics trace* collects statistical data that is broadcast by various components of Db2 at certain time intervals. You can specify intervals for statistics collection during installation.

Abbreviation: S

LOCATION cannot be specified when you choose a statistics trace.

(AUDIT)
The *audit trace* collects information about Db2 security controls and can be used to ensure that data access is allowed only for authorized purposes.

Abbreviation: AU

(MONITOR)
The *monitor trace* enables attached monitor programs to access Db2 trace data through calls to the instrumentation facility interface (IFI). Monitor programs can access the trace data asynchronously through an OP*x* buffer by issuing READA requests, or synchronously in the monitor return area by issuing READS requests.

Abbreviation: MON

SCOPE
Specifies the scope of the command in a data sharing group.

(LOCAL)
Specify to start traces on the local member only.

(GROUP)
Specify to start traces on all members of the data sharing group.

FL 509 You cannot specify SCOPE(GROUP) to start audit traces that use tamper-proof audit policies.

ASID(x'*dddd*')
Specifies the address space for which trace data is collected.

dddd is a four-byte hexadecimal address space ID (ASID).

COMMENT (*string*)
Gives a comment that is reproduced in the trace output (except in the resident trace tables). This option can be used to record why the command was issued.

string is any character string; it must be enclosed between apostrophes if it includes a blank, comma, or special character.

RMID
Specifies resource manager identifier. You can specify up to 8 valid RMIDs, which are one or two digit identifiers. You cannot specify RMID for accounting or statistic traces.

DEST

Specifies where the trace output is to be recorded. You can use more than one value, but do not use the same value twice. If you do not specify a value, the trace output is sent to the default destination shown in the following table.

If the specified destination is not active or becomes inactive after you issue the START TRACE command, you receive message DSNW133I, which indicates that the trace data is lost. This applies for destinations GTF, SRV, and SMF. You also receive this message for destinations OP *n* and OPX if START TRACE is not issued by an application program.

Abbreviation: D

The allowable values and the default value depend on the type of trace started, as shown in the following table.

Table 23. Allowable destinations for each trace type

Type	GTF	SMF	SRV	OP *n*	OPX	ZAI
PERFM	Default	Allowed	Allowed	Allowed	Allowed	
ACCTG	Allowed	Default	Allowed	Allowed	Allowed	
STAT	Allowed	Default	Allowed	Allowed	Allowed	Allowed
AUDIT	Allowed	Default	Allowed	Allowed	Allowed	
MONITOR	Allowed	Allowed	Allowed	Allowed	Default	

The meaning of each value is as follows:

GTF

The z/OS generalized trace facility (GTF). The record identifier for records from Db2 is X'0FB9'.

SMF

The system management facility. The SMF record type of Db2 trace records depends on the IFCID record, as follows:

IFCID record
SMF record type

1 (System services statistics)
0100

2 (Database services statistics)
0100

3 (Agent accounting)
0101

202 (Dynamic system parameters)
0100

225 (System Storage® summary statistics)
0100

230 (Data sharing global statistics)
0100

239 (Package accounting)
0101

369 (Aggregate accounting statistics)
0100

All others
0102

SRV
An exit to a user-written routine. For instructions and an example of how to write such a routine, see the macro DSNWVSER in library *prefix* .SDSNMACS.

OP *n*
A specific destination.

n can be an integer from 1 to 8.

OPX
A generic destination which uses the first free OP *n* slot.

Only applications that start a trace to an OP *n* buffer can read that buffer.

All traces to an OPX destination must be stopped before the buffer is marked as not in use. Traces that are started to an OPX buffer that was formerly in use write over the storage any previous traces had set.

The constraint and filtering blocks

The constraint and filtering blocks place optional limits on the kinds of data that are collected by the trace. The filtering options are exclusionary equivalents to the corresponding constraint options.

A START TRACE command for a statistics trace allows only the CLASS constraint option. A START TRACE command for any other trace type allows any constraint option or filter option. However, Db2 does not use any filters or constraints that you specify when you start a trace for any of the following IFCIDs:

IFCID	IFCID	IFCID	IFCID	IFCID	IFCID	IFCID	IFCID	IFCID	IFCID
1	2	4	5	104	105	107	124	129	147
148	149	150	185	186	199	202	217	225	230
254	306	316	317	365	401	402	411	412	

A START TRACE command can contain multiple constraint options, multiple filtering options, or a combination of both. A constraint or a filtering option can contain multiple values. However, the command must not contain multiple constraint options that each contain multiple values. A single constraint option that has multiple values can be specified with:

- Multiple other constraint options, each of which has a single value
- Multiple filtering options, each of which has a single value or multiples values

An error message is issued if the START TRACE command contains two or more constraint options that each have multiple options.

The meaning of each option is as follows. Filtering options are described with their corresponding constraint options.

PLAN(*plan-name* , …) or XPLAN(*plan-name* , …)
Introduces a list of specific plans for which trace information is gathered. Use PLAN to constrain the trace to the specified plans or XPLAN to exclude the specified plans. You cannot use this option for a STAT trace.

The **default** is PLAN(*).

(*)
Starts a trace for all plans.

plan-name
Is the name of an application plan. You can use up to eight names; a separate trace is started for each name. If you use more than one name, you can use only one value for AUTHID and LOCATION.

PKGLOC or XPKGLOC
Specifies the location name where the package is bound. Use PKGLOC to constrain the trace to the specified locations or XPKGLOC to exclude the specified locations.

PKGCOL or XPKGCOL
Specifies the package collection name. Use PKGCOL to constrain the trace to the specified collections or XPKGCOL to exclude the specified collections.

PKGPROG or XPKGPROG
Specifies the DBRM or program name. Use PKGPROG to constrain the trace to the specified programs or XPKGPROG to exclude the specified programs.

AUTHID(*authorization-id* , …) or XAUTHID(*authorization-id* , …)
Introduces a list of specific authorization IDs for which trace information is gathered. Use AUTHID to constrain the trace to the specified authorization IDs or XAUTHID to exclude the specified authorization IDs. The authorization IDs specified must be the primary authorization IDs. You cannot use this option for a STAT trace.

The **default** is `AUTHID( * )`.

(*)
Starts a trace for all authorization IDs.

authorization-id
Specifies an authorization ID. You can use up to eight identifiers; a separate trace is started for each identifier. If you use more than one identifier, you can use only one value for PLAN and LOCATION.

LOCATION(*location-name* , ...) or XLOC(*location-name* , ...)
Specifies a list of location names for which trace information is gathered. Use LOCATION to constrain the trace to the specified locations or XLOC to exclude the specified locations. The use of the LOCATION or XLOC option precludes tracing threads that have no distributed data relationship. LOCATION or XLOC cannot be specified when you want to start a statistics trace.

location-name
Identifies the Db2 subsystems whose distributed threads you want to trace. Activates the Db2 trace for the remote TCP/IP or SNA location that you specify by *location-name*.

You can specify up to eight locations; a separate trace is started for each one. You can specify only one location if you use more than one plan name or authorization ID.

<luname>
Activates the Db2 trace for the remote clients that are connected to DDF through the remote SNA LU name that you specified in *luname*.

ipaddr
Activates the Db2 trace for the remote clients that are connected to DDF through the remote TCP/IP host. *ipaddr* is the IP address.

The format of the IP address depends on whether the TCP/IP stack has been configured as an IPv4-only stack or a dual-mode stack. An IPv4 stack supports only the IPv4 protocol. A dual-mode stack supports IPv4 and IPv6 protocols.

- For an IPv4-only stack, you enter the IP address in IPv4 format:

```
x.x.x.x
```

- For a dual-mode stack:
  - You enter an IPv6 address in IPv6 format:

```
y:y:y:y:y:y
```

  - You enter an IPv4 address in dual IPv6 and IPv4 format, with ::FFFF: as the IPv6 portion:

```
::FFFF:x.x.x.x
```

(*)

Indicates that you want to start trace events that occur under distributed threads regardless of which location they are connected to. Specifying the local location name is equivalent to specifying LOCATION(*).

Clients other than Db2 for z/OS: Db2 for z/OS does not receive a location name from clients that are not Db2 for z/OS subsystems. To start a trace for a client that is not a Db2 for z/OS subsystem, enter its LUNAME or IP address. Enclose the LUNAME by the less-than (<) and greater-than (>) symbols. Enter the IP address in the form *nnn.nnn.nnn.nnn*. For example, to start a trace for a client with the LUNAME of LULA, enter the following command:

```
-START TRACE (PERFM) CLASS (*) LOCATION (<LULA>)
```

To start a trace for a client with the IP address of 123.34.101.98, enter the following command:

```
-START TRACE (PERFM) CLASS (*) LOCATION (::FFFF:123.34.101.98)
```

USERID or XUSERID

Specifies the user ID. Use USERID to constrain the trace to the specified user IDs or XUSERID to exclude the specified user IDs. You can specify multiple values and wildcard values as described in Usage notes.

USERID and XUSERID can be up to 16 characters.

APPNAME or XAPPNAME

Specifies the application name. Use APPNAME to constrain the trace to the specified applications or XAPPNAME to exclude the specified applications. You can specify multiple values and wildcard values as described in Usage notes.

APPNAME and XAPPNAME can be up to 32 characters.

WRKSTN or XWRKSTN

Specifies the workstation name. Use WRKSTN to constrain the trace to the specified workstations or XWRKSTN to exclude the specified workstations. You can specify multiple values and wildcard values as described in Usage notes.

WRKSTN and XWRKSTN can be up to 18 characters.

CONNID or XCONNID

Specifies the connection ID. Use CONNID to constrain the trace to the specified connections or XCONNID to exclude the specified connections.

The CONNID or XCONNID value is one of the following values:

CONNID value	Type of connection to Db2
BATCH	Batch
TSO	TSO
DB2CALL	QMF
UTILITY	Db2 utility
subsystem-id	Db2 internal
cics-connection-name	CICS
ims-connection-name	IMS
RRSAF	RRSAF
connection-name	A connection from a remote Db2 for z/OS requester. This value is the connection name of the thread at the requesting location.
SERVER	A connection from a remote requester that is not Db2 for z/OS.

CORRID or XCORRID
Specifies the correlation ID. Use CORRID to constrain the trace to the specified correlation IDs or XCORRID to exclude the specified correlation IDs.

ROLE or XROLE
Specifies the connection roles. Use ROLE to constrain the trace to the specified roles or XROLE to exclude the specified roles.

CLASS(*integer* , ...)
Introduces a list of classes of data gathered. What classes are allowable, and their meaning, depends on the type of trace started.

Abbreviation: C

When the CLASS option is omitted, the *default classes* within the trace type are activated. The default classes are identified in the Description column of the following tables.

(*)
Starts a trace for all classes of the trace type.

integer
Any number in the following table. You can use any number of classes that are allowed for the type of trace started.

Tip: IFCID numbers are often presented in Db2 and its documentation with three or four digits and leading zeros. For example, you might find: "IFCID 1," "IFCID 001," or "IFCID 0001." However, you can assume that these references each have the same meaning.

Accounting trace (ACCTG)

Table 24. Classes for Db2 accounting trace

Class	Description of class	Activated IFCIDs
1	Standard accounting data. Class 1 is also activated when you omit the CLASS keyword from the START TRACE command when you start the accounting trace.	3, 106, 200, 239
2	Entry or exit from Db2 event signaling.	232
3	Elapsed wait time in Db2.	6 7, 8, 9, 32, 33, 44, 45, 117, 118, 127, 128, 170, 171, 174, 0175, 213, 214, 215, 216, 226, 227, 242, 243, 321, 322, 329, 378, 379, 382, 383, 413, 414
4	Installation-defined accounting record.	151
5	Time spent processing IFI requests.	187
6	Reserved.	
7	Package-level accounting in-Db2 time.	200, 232, 239, 240
8	Package-level accounting wait time in Db2.	6, 7, 8, 9, 32, 33, 44, 45, 117, 118, 127, 128, 170, 171, 174, 175, 213, 214, 215, 216, 226, 227, 239, 241, 242, 243, 321, 322, 378, 379, 382, 383, 413, 414

Table 24. Classes for Db2 accounting trace (continued)

Class	Description of class	Activated IFCIDs
10	Package detail. One of the following traces must also be activated before the IFCID 239 records are written: • Accounting class 7 • Accounting class 8 • Monitor class 7 • Monitor class 8	239
11	Plan-level accounting information. Class 11 is activated when you omit the CLASS keyword from the START TRACE command when you start the accounting trace. Start a trace for accounting class 11 instead of accounting class 1 if you do not want IFCID 239 records returned.	3, 200
12-29	Reserved.	
30–32	Available for local use.	

Audit trace (AUDIT)

Table 25. Classes for Db2 audit trace

Class	Description of class	Activated IFCIDs
1	Access attempts denied due to inadequate authorization. Class 1 is also activated when you omit the CLASS keyword from the START TRACE command when you start the audit trace.	140
2	Explicit GRANT and REVOKE.	141
3	CREATE, ALTER, and DROP operations against audited tables.	142
4	First change of audited object.	143
5	First read of audited object.	144
6	Bind time information about SQL statements that involve audited objects.	145
7	Assignment or change of authorization ID.	55, 83, 87, 169, 319
8	Utilities.	23, 24, 25, 219, 220
9	Installation-defined audit record.	146, 392
10	Trusted context information.	269, 270
11	Audits of successful access.	361"1" on page 516
12–29	Reserved.	
30–32	Available for local use.	

Table 25. Classes for Db2 audit trace (continued)

Class	Description of class	Activated IFCIDs

Notes:

1. If IFCID 361 is started through START TRACE, all successful access is traced. If IFCID 361 is started because audit policy category SYSADMIN is on, only successful access using the SYSADMIN administrative authority is traced. If IFCID 361 is started because audit policy category DBADMIN is on, only successful access using the DBADMIN administrative authority is traced.

Statistics trace（STAT）

Table 26. Classes for Db2 statistics trace

Class	Description of class	Activated IFCIDs
1	Information about system services, database statistics, statistics for the database services address space (*ssnm*DBM1), aggregated CPU and wait time statistics by connection type, and information about the system parameters that were in effect when the trace was started. Class 1 is also activated when you omit the CLASS keyword from the START TRACE command when you start the statistics trace.	1, 2, 105, 106, 202, 225, 369
2	Installation-defined statistics record	152
3	Deadlock, lock escalation, group buffer pool, data set extension information, and indications of long-running uncommitted reads, and active log space shortages.	172, 196, 250, 258, 261, 262, 313, 330, 335, 337
4	Db2 exceptional conditions.	173, 191, 192, 193, 194, 195, 203, 204, 205, 206, 207, 208, 209, 210, 235, 236, 238, 267, 268, 334, 343, 402
5	Db2 data sharing statistics.	230, 254
6	Storage statistics for the Db2 subsystem.	225
7	DRDA location statistics.	365
8	Data set I/O statistics.	199 , 389
9	Aggregated CPU and wait time statistics by connection type.	369
10	DRDA remote application statistics based on the CURRENT CLIENT_APPLNAME special register.	411
11	DRDA remote user statistics based on the CURRENT CLIENT_USERID special register.	412
12–29	Reserved.	
30–32	Available for local use.	

Performance trace（PERFM）

Table 27. Classes for Db2 performance trace

Class	Description of class	Activated IFCIDs
1	Background events. Class 1 is also activated when you omit the CLASS keyword from the START TRACE command when you start the performance trace.	1, 2, 31, 42, 43, 76, 77, 78, 79, 102, 103, 105, 106 107, 153
2	Subsystem events. Class 2 is also activated when you omit the CLASS keyword from the START TRACE command when you start the performance trace.	3, 68-75, 80, 81, 82, 83, 84, 85, 86, 87, 88, 89, 106, 174, 175
3	SQL events. Class 3 is also activated when you omit the CLASS keyword from the START TRACE command when you start the performance trace.	22, 53, 55, 58, 59, 60, 61, 62, 63, 64, 65, 66, 92, 95, 96, 97, 106, 112, 173, 177, 233, 237, 250, 272, 273, 325
4	Reads to and writes from the buffer and EDM pools.	6, 7, 8, 9, 10, 29, 30, 105-107, 127, 128, 226, 227, 321, 322, 477
5	Write to log; archive log.	32, 33, 34, 35, 36, 37, 38, 39, 40, 41, 104, 106, 114, 115, 116, 117, 118, 119, 120, 228, 229
6	Summary lock information.	20, 44, 45, 105, 106, 107, 172, 196, 213, 214, 218, 337
7	Detailed lock information.	21, 105, 106, 107, 223
8	Data scanning detail.	13-18, 105, 106, 107, 125, 221, 222, 231, 305, 311, 363
9	Sort detail.	26, 28, 95, 96, 106
10	BIND, commands, and utilities detail.	23, 24, 25, 90, 91, 0105, 106, 107, 108, 109, 110, 111, 201, 256
11	Execution unit switch and latch contentions.	46-52, 56, 57, 93, 94, 106, 113
12	Storage manager.	98, 99, 100, 101, 106
13	Edit and validation exits.	11, 12, 19, 105, 106, 107
14	Entry from and exit to an application.	67, 106, 121, 122
15	Installation-defined performance record.	154
16	Distributed processing.	157, 158, 159, 163, 167, 183
17	Claim and drain information.	211, 212, 213, 214, 215, 216
18	Event-based console messages.	197
19	Data set open and close activity.	370, 371
20	Data sharing coherency summary.	249, 251, 256, 257, 261, 262, 267, 268
21	Data sharing coherency detail.	255, 259, 263
22	Authorization exit parameters.	314
23	Language environment runtime diagnostics.	327
24	Stored procedure detail.	380, 499

Table 27. Classes for Db2 performance trace (continued)

Class	Description of class	Activated IFCIDs
25-29	Reserved.	
30–32	Available for local use.	

Monitor trace (`MONITOR`)

Table 28. Classes for Db2 monitor types

Class	Description of class	Activated IFCIDs
1	Standard accounting data. Class 1 is also activated when you omit the CLASS keyword from the START TRACE command when you start the monitor trace.	200
2	Entry or exit from Db2 event signaling.	232
3	Db2 wait time for I/O, locks; resource usage information.	6, 7, 8, 9, 32, 33, 44, 45, 117, 118, 127, 128, 170, 171, 174, 175, 213, 214, 215, 216, 226, 227, 242, 243, 321, 322, 378, 379, 382, 383, 413, 414
4	Installation-defined monitor record.	155
5	Time spent processing IFI requests.	187
6	Changes to tables created with DATA CAPTURE CHANGES.	185
7	Entry or exit from Db2 event signaling for package accounting. The data traces the amount of time an agent spent in Db2 to process each package.	200, 232, 240
8	Wait time for a package.	6, 7, 8. 9, 32, 33, 44, 45, 51, 52, 56, 57, 117, 118, 127, 128, 170,171, 174, 175, 213, 214, 215, 216, 226, 227, 239, 241, 242, 243, 321, 322, 378, 379, 382, 383, 413, 414
9	Enables statement level accounting.	124
10	Package detail for buffer manager, lock manager and SQL statistics. One of the following traces must also be activated before the IFCID 239 records are written: • Accounting class 7 • Accounting class 8 • Monitor class 7 • Monitor class 8	239
11	Plan-level accounting information. Class 11 is activated when you omit the CLASS keyword from the START TRACE command when you start the monitor trace.	3, 200
12-28	Reserved.	

Table 28. Classes for Db2 monitor types (continued)		
Class	**Description of class**	**Activated IFCIDs**
29	Controls the subsystem-wide collection of statistics for SQL statements.	316 , 318, 400, 401
30–32	Available for local use.	

IFCID (*ifcid* , ...)

Specifies which other IFCIDs (trace events), in addition to those IFCIDs contained in the classes specified in the CLASS option, are to be started. To start only those IFCIDs specified in the IFCID option, use trace classes 30, 31, or 32. These classes have no predefined IFCIDs and are available for a location to use. See Example 1 for an example of activating only those trace events specified in the IFCID option.

If you do not specify the IFCID option, only those IFCIDs contained in the activated trace classes are started.

The maximum number of IFCIDs is 156. The range of values that are valid for the IFCID option is 1-511, with the following exceptions: 4, 5, 185, 187, 217, 232, 234, 240, 241, and 362. These exceptions are invalid values for the IFCID option. IFCIDs 4 and 5 are always automatically active.

Tip: IFCID numbers are often presented in Db2 and its documentation with three or four digits and leading zeros. For example, you might find: "IFCID 1," "IFCID 001," or "IFCID 0001." However, you can assume that these references each have the same meaning.

IFCID 362 is automatically started if you specify the AUDTPLCY option. Some of the other invalid IFCIDs can be activated only by certain trace classes. The invalid values for the IFCID option that can be started only by trace classes are:

To start...
Start...

IFCID 185
monitor trace class 6

IFCID 232
monitor trace class 2 or 7, or accounting trace class 2 or 7

IFCID 240
monitor trace class 7 or accounting trace 7

IFCID 241
monitor trace class 8 or accounting trace 8

The **default** is `IFCID( * )`.

BUFSIZE (*k_bytes* , ...)

Specifies the size of an IFC managed buffer that receives the trace data. You can specify this option only if you specified an OP *n* destination.

k_bytes can range from 256 KB to 65536 KB. The number must be evenly divisible by 4. If you specify a value outside of this range, the range limit closest to the specified value is used. To allocate a buffer size of 256 KB, you would specify BUFSIZE(256).

The **default** is `BUFSIZE ( * )`, which is the size set when Db2 was installed.

AUDTPLCY(*policy-name* , ...)

Introduces a list of up to eight audit policy names for which trace information is gathered. This option starts the IFCIDs that correspond to the categories that are specified in the listed audit policies, and starts a trace for IFCID 0362.

AUDTPLCY applies to trace type AUDIT. You cannot specify AUDTPLCY with CLASS or IFCID.

TDATA

Specifies the product section headers to be placed into the product section of each trace record. If you do not specify TDATA, then the type of trace determines the type of product section header. The product section of a trace record can contain multiple headers.

All IFC records have a standard IFC header. The correlation header is added for accounting, performance, audit, and monitor records. The trace header is added for serviceability records.

CORRELATION

Places a correlation header on the record.

Abbreviation: COR

TRACE

Places a trace header on the record.

Abbreviation: TRA

CPU

Places a CPU header on the record. The CPU header contains the current processor time for the z/OS TCB or SRB executing.

DISTRIBUTED

Places a distributed header on the record.

Abbreviation: DIST

Usage notes

Finding trace field (IFCID) descriptions

You can find descriptions of trace records in the IFCID flat file (DSNWMSGS). The most current version of DSNWMSGS is available only for clients who have Db2 12 for z/OS licenses. The information is in a PDF file. To locate this information, see Db2 12 for z/OS IFCID flat file (DSNWMSGS).

Audit policies

Up to 32 audit policies can be active concurrently. If you specify multiple audit policies to start, and some of those policies do not start successfully, warning message DSNW196I is returned. The remaining audit policies are started.

Recommendation: FL 509 Start all tamper-proof audit policies in one START TRACE command, which assigns them to one trace number. Doing so helps avoid the possibility of mismatching trace numbers among data sharing members if the SCOPE(GROUP) option is used to stop a tamper-proof audit policy.

Number of traces

If you use one or no values for PLAN, AUTHID, or LOCATION, the START TRACE command starts a single trace. If you use multiple values for PLAN, AUTHID, or LOCATION, the command starts a trace for each plan, authorization ID, or location. Up to 32 traces can be active concurrently. If a START TRACE command is entered from the console or from the DB2I panels to an OP *n* or an OPX destination, message DSNW133I is issued to indicate trace data lost.

Using the options PLAN, AUTHID, or LOCATION when starting monitor trace class 1 has no effect on the amount of data returned on IFI READS requests.

Using the options PLAN, AUTHID, or LOCATION has no effect when starting either accounting or monitor trace classes 2, 5, or 7.

Stopping and starting Db2

If Db2 is stopped and started after you have started a trace, the trace is not restarted automatically.

Specifying SCOPE (GROUP)

When you issue START TRACE with SCOPE(GROUP), Db2 issues a START TRACE command on each member of the data sharing group. The data goes to the destination as it is defined for each member

of the data sharing group. If you want to gather trace data for all members of the data sharing group in one place, use a monitor program with IFI READA or READS calls to collect the data.

FL 509 If you use the SCOPE(GROUP) option to specify multiple audit policies to start, the audit policies are sent to all members of the data sharing group. However, if one of the specified audit policies is a tamper-proof audit policy, the tamper-proof audit policy is blocked for all members of the data sharing group. You cannot use SCOPE(GROUP) to start tamper-proof audit policies.

If a trace is started with SCOPE(GROUP), and a new member joins the data sharing group after the trace is started, the new member also writes the trace data that is specified by the START TRACE command.

Starting a trace with SCOPE(GROUP) can generate large amounts of trace data, so you might need to increase the size of the return area in your monitor program to hold the extra data.

Tracing threads using the * wildcard in a partial name or address

In a partial name or address, you can use the wildcard suffix, "*" to filter threads. For example, if you specify "-START TRACE PLAN (A,B,C*)", Db2 will trace, and then return A, B, CDE, CDEFG, CDEFGH, and so on. It will trace threads "A", "B" and all threads starting with "C".

You cannot include the wildcard character in the middle of a partial name or address.

Tracing threads using the positional, (_) wildcard in a partial name or address

In a partial name or address, you can use the positional wildcard, which is represented by the, "_" character, to trace threads when you want the wildcard in the middle, or when you want to trace threads of a specific length. For example, if you specify "-START TRACE PLAN (A_C), all threads will be traced that are three characters that have "A" as the first character, and "C" as the third. This command would return "ABC", "ADC", "AEC", and so on. If you want to trace the thread "A_C" then you can specify "-START TRACE PLAN (A/_C). The "/" before the "_" tells Db2 to trace for the underscore in the search, rather than treating it as a wildcard. The same logic applies if you are trying to trace a thread that includes a "/" or "*" character. Because the character "/" is an escape character, if you are trying to trace a thread that has an "/" character in it, you can specify, for example, "-START TRACE PLAN (A//C)" to trace the thread "A/C". You can also specify "-START TRACE PLAN (A/*C) to trace the thread "A*C".

Tracing multiple threads at once using wildcards

You also have the option of tracing multiple threads based on multiple trace qualifications. For example, you can specify, "-START TRACE PLAN (A*, B*, C*) to simultaneously trace ALL threads for plan that start with "A", "B", and "C". The wildcard character, "*" will trace all threads. You can specify more complex combinations such as, "-START TRACE PLAN (A_B*, C*, AND C/_D*)", which will return all threads that:

- Begin with "A", have a one character wild card as the second character in the thread, have a "B" as the third character in the thread, and end with any type or number of characters (**A**D**B**IOP, **A**O**B**TYJDP,)
- begin with "C", and end with any combination of characters (**C**DE, **C**GHKO)
- begin with "C_D" and end with any type of character combination (**C_D**EFGH, **C_D**LMNOP)

All of the possible thread combinations listed above will be returned with the command above.

Specifying filtering criteria for threads

You can control the set of threads for which trace records are written by setting specific filtering criteria in the -START TRACE command. The following rules apply to **all** trace filters:

- Db2 applies trace filters when an external trace record is written. The state of a thread at that time dictates whether a thread is written in its entirety or eliminated completely. For example, if the PKGPROG(ABC) option is specified, trace records are written for threads that execute package ABC only if package ABC is active during the SQL event that causes the trace records to be externalized.
- Trace filters do not alter the contents of a trace record.

- Trace classes or IFCIDs that are not associated with specific trace records, such as accounting classes 2, 3, 7, 8, and 10, or IFCID 318, are not affected by filtering. For example, the following command does not result in filtering because no external records are written by accounting classes 7 or 8:

```
-START TRACE(ACCTG) CLASS(7,8) DEST(SMF) PKGPROG(ABC)
```

- Db2 allows only one filtering option to have more than one value in a -START TRACE command. For example, the following command is valid:

```
-START TRACE PLAN(A,B) USERID(B) WRKSTN(E)
```

  The following command is not valid:

```
-START TRACE PLAN(A,B) USERID(A,B) WRKSTN(E)
```

Filtering threads using exclude functionality

When you specify an “X” with any constraint keyword, such as XPLAN, when you are filtering threads, you are using the exclude functionality for the –START TRACE command. You have the option of excluding specific types of threads when you are running trace commands. You can use the “X” character to exclude specific combinations of characters when you are running a trace. For example, you can specify this command to trace all threads except “A”:

```
-START TRACE XPLAN(A)
```

In this instance, b, bcd, bcde, or cd might be returned.

You can also exclude multiple types of threads from your trace. For example, you can specify this command to start a trace for all threads **except** threads for plans that start with “A”, with any combination of characters following “A”, and all those characters starting with “B”, with any combination of characters following “B”:

```
-START TRACE XPLAN(A*, B*)
```

Specifying XPLAN (*) excludes all threads from your search, and is not allowed. You also cannot use the * wildcard in the middle of trace criteria with exclude functionality, such as: “-START TRACE XPLAN (A*C).” You can, however, specify this command to return all threads **except** those for plans that start with “A”, any **two** characters next, a “C” in the fourth space, and any characters at the end.

```
-START TRACE XPLAN (A_ _ C *)
```

You can start two traces at once, in order to help you optimize your tracing capabilities. For example, you can specify this command:

```
-START TRACE XPLAN (A, B, C) USERID(D)
```

This command tells Db2 to start tracing threads for all plans **except** plans “A”, “B”, or “C”, and only where the user ID = “D”.

Combining trace qualifiers

You can customize the threads you trace by commanding Db2 to trace specific threads, while excluding other specific threads. For example, you can specify, “-START TRACE USERID (A,B) XPLAN (C)” . This criteria only traces threads where the user ID is equal to “A” or “B”, and plan is **not** equal to “C”. In this example, a thread where the user id is “A” and the plan is equal to “D” would pass, and be traced, but a thread where the user ID is “A” and plan is “C” would not pass, and would not be traced.

You can introduce multiple wildcards into your start trace commands to add more customization to your traces. For example, you can specify “-START TRACE PLAN (C*) USERID (Z, X) XPLAN (C, D, E)”. In this example, for the thread to be traced, the plan must begin with C, the user ID must be equal to Z or to X, and the plan cannot be C, D, or E. So a plan of CB, with a user ID of Z would pass, and the

thread would be traced, but plan C with a user ID of X would fail because the command specifies not to trace threads where the plan is “C”, without additional characters in the thread.

Trace destination precedence

If an IFCID is associated with a class, and you specify that IFCID in the IFCID keyword, the destination for the class takes precedence. This rule affects IFCIDs in accounting classes 2, 3, 5, 7, 8, and monitoring classes 1, 2, 3, 5, 7, 8 because these classes have preset destinations for the IFCIDs.

For example, the following command "-START TRACE(ACCTG) CLASS (1,2,3) IFCID(6,7) DEST SMF," will not write IFCIDs 6 and 7 to SMF because they are part of accounting class 3, which has a preset destination. To write IFCIDs 6 and 7 to SMF, you need to start the trace as follows:

```
-START TRACE(ACCTG) CLASS(1,2,3) DEST(SMF)
-START TRACE(ACCTG) CLASS(30) IFCID(6,7) DEST(SMF)
```

IFCIDs for local use

IFCIDs 1000 through 1999 are not used by Db2, and are available for local use.

Examples

Example: performance trace for threads with remote activity

Start a performance trace for threads with remote activity to location USIBMSTODB21. Only activate IFCIDs 0044 (lock suspends) and 0045 (lock resumes). Trace class 30 is available for installation use.

```
-START TRACE (PERFM)
  DEST(GTF)
  LOCATION(USIBMSTODB21)
  CLASS(30)
  IFCID(44,45)
```

Example: accounting trace for a plan

Start an accounting trace for plan DSN8BC81. Write records to SMF (that will happen by default). Include a comment to identify the trace.

```
-START TRACE (ACCTG)
  PLAN (DSN8BC81)
  COMMENT ('ACCTG TRACE FOR DSN8BC81')
```

Example: statistics trace

Start the statistics trace. Write records to SMF (by default).

```
-START TRACE=S
```

Example: start monitor tracing

Start monitor tracing (usually done by an application program) on the data sharing group. Write records to OPX (by default).

```
-START TRACE(MON) SCOPE(GROUP)
```

Example: performance trace records for threads that are executing package

Use the PKGPROG option to write performance trace records only for threads that are executing package ABC during the SQL event that causes the trace record to be externalized.

```
-START TRACE(PERFM) CLASS(3) DEST(SMF) PKGPROG(ABC)
```

Example: accounting trace to activate package-level accounting

Start an accounting trace to activate package-level accounting and to collect data that is externalized by IFCID 3 and IFCID 239. Use the PKGPROG option to externalize accounting information that is written when accounting records for package ABC are written.

```
-START TRACE(ACCTG) CLASS(1,2,3,7,8) DEST(SMF) PKGPROG(ABC)
```

The externalized records contain information for **all** packages that are executed during the accounting interval.

Example: provide IFC exclude filtering for correlation ID

```
START TRACE (A) XCORRID (*)
- 10.46.05 STC00051  DSNW150I  ) EXCLUDE FOR ALL CORRID VALUES IS NOT
-  ALLOWED
- 10.46.05 STC00051  DSN9023I  ) DSNWVCM1 '-START TRACE' ABNORMAL COMPLETION
```

Example audit trace using audit policy

Start an audit trace using audit policy AUDITADMIN.

```
-STA TRACE(AUDIT) DEST(GTF) AUDTPLCY(AUDITADMIN)
```

Trace information for commands issued with group scope

If this command is issued with options that specify group scope in a Db2 data sharing member, it also runs on all other active members. IFICID 090 trace records for other group members can show that the same command was issued by the SYSOPR authorization ID from the 016.TLPKN5F correlation ID, in addition to the trace records from the member where the original command was issued. See Command scope in Db2 data sharing (Db2 Data Sharing Planning and Administration).

Related concepts

Db2 trace (Db2 Performance)

Db2 trace output (Db2 Performance)

Related tasks

Minimizing the processing cost of Db2 traces (Db2 Performance)

Related reference

-STOP TRACE command (Db2)
The Db2 command STOP TRACE stops tracing.

-MODIFY TRACE command (Db2)
The Db2 command MODIFY TRACE changes the IFCIDs (trace events) associated with a particular active trace.

-DISPLAY TRACE command (Db2)
The Db2 command DISPLAY TRACE displays a list of active traces.

Chapter 85. -STOP ACCEL command (Db2)

The Db2 command STOP ACCEL causes the Db2 subsystem to stop using the specified accelerator servers.

Environment

This command can be issued from a z/OS console, a DSN session under TSO, a DB2I panel (DB2 COMMANDS), an IMS or CICS terminal, or a program that uses the instrumentation facility interface (IFI).

Data sharing scope: Group or member

Authorization

To execute this command, you must use a privilege set of the process that includes one of the following authorities:

- SYSOPR authority
- SYSCTRL authority
- SYSADM authority

Db2 commands that are issued from a logged-on z/OS console or TSO SDSF can be checked by Db2 authorization using primary and secondary authorization IDs. A logged-on z/OS user ID must be defined in RACF or a similar security server.

Syntax

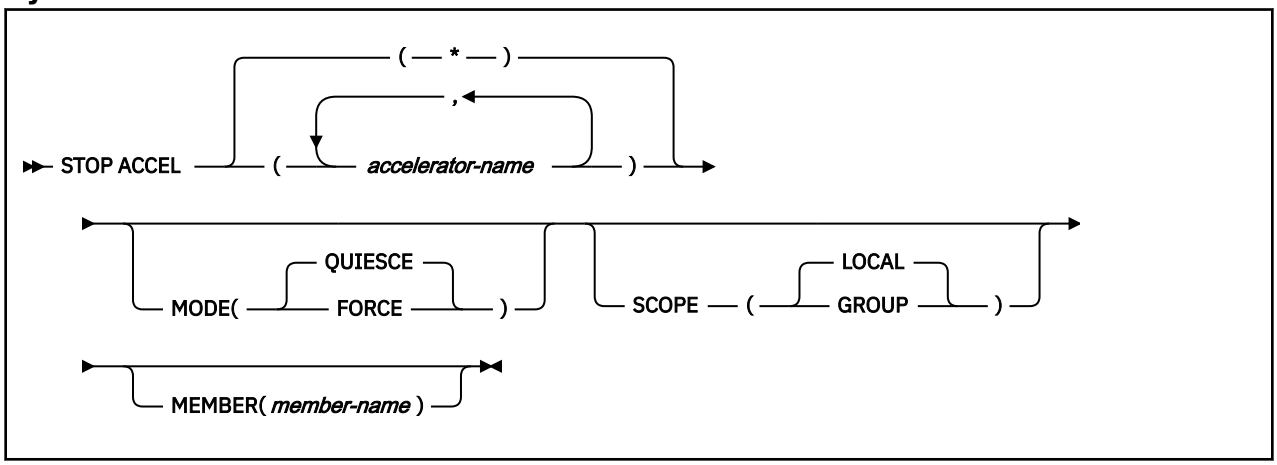

Option descriptions

(*accelerator-name*)
The accelerator server name. This option limits the stop command to the specified accelerator server.

(*)
Indicates that the stop command applies to all accelerator servers.

MODE
Indicates whether currently executing active accelerator threads are allowed to complete. Valid values are:

(QUIESCE)
Allows active accelerator threads to complete normally and terminates only inactive accelerator threads.

© Copyright IBM Corp. 1983, 2024

(FORCE)
Terminates all currently executing accelerator threads. Db2 reverts to baseline processing for the originating threads.

SCOPE
Specifies the scope of the command. In a non-data-sharing environment, the option is ignored. Valid values are:

(LOCAL)
Stops the current data sharing member from using the specified accelerator servers. This is the default.

(GROUP)
Stops the data sharing group from using the specified accelerator servers.

MEMBER
Stops specific members of the data sharing group from using the specified accelerator servers. The default behavior is to stop accelerator servers on the local member. This option is not supported in non-data sharing environments.

Usage notes

Specifying SCOPE(GLOBAL) with MEMBER(*member-name*)
If you specify both SCOPE(GLOBAL) and MEMBER(*member-name*), the command will be executed only on the specified members of the data sharing group.

Trace information for commands issued with group scope
If this command is issued with options that specify group scope in a Db2 data sharing member, it also runs on all other active members. IFICID 090 trace records for other group members can show that the same command was issued by the SYSOPR authorization ID from the 016.TLPKN5F correlation ID, in addition to the trace records from the member where the original command was issued. See Command scope in Db2 data sharing (Db2 Data Sharing Planning and Administration).

Example

The following command is used to stop the current data sharing member from using all accelerators, and to terminate only inactive accelerator threads.

```
-STOP ACCEL(*) MODE(QUIESCE) SCOPE(LOCAL)
```

Sample results follow:

```
DSNX863I ) DSNX8STO STOP ACCELERATOR INITIATED FOR BLINK1
DSNX863I ) DSNX8STO STOP ACCELERATOR INITIATED FOR BLINK2
DSNX861I ) DSNX8CXA ALL OTHER ACCELERATORS STOPPED
DSN9022I ) DSNX8CMD '-STOP ACCEL' NORMAL COMPLETION
DSNX870I ) DSNX8EKG ACCELERATOR BLINK1 IS NOT ONLINE
DSNX860I ) DSNX8EKG STOP ACCELERATOR SUCCESSFUL FOR BLINK1
DSNX870I ) DSNX8EKG ACCELERATOR BLINK2 IS NOT ONLINE
DSNX860I ) DSNX8EKG STOP ACCELERATOR SUCCESSFUL FOR BLINK2
```

Related information
IBM Db2 Analytics Accelerator for z/OS documentation

Chapter 86. STOP *admtproc* command (z/OS)

The STOP *admtproc* command stops the administrative task scheduler that is specified in the *admtproc* parameter.

The command should only be issued to bring down the administrative task scheduler for maintenance or to prepare for an IPL. To stop the administrative task scheduler for other purposes, issue the command: `modify admtproc, appl=shutdown`.

Environment

This command can be issued only from a z/OS console.

Data sharing scope: Member

Authorization

The command requires an appropriate level of operating system authority.

Syntax

```
►► STOP ── admtproc ►◄
```

Option descriptions

admtproc
Specifies the procedure name of the administrative task scheduler task that you want to stop.

Examples

Example: This command stops the *admtproc* scheduler.

Enter the following command on the system console:

```
stop admtproc
```

© Copyright IBM Corp. 1983, 2024

Chapter 87. -STOP CDDS command (Db2)

The Db2 command STOP CDDS makes the compression dictionary data set (CDDS) unavailable, and directs all members of a Db2 data sharing group to close and deallocate the CDDS.

Abbreviation: -STO CDDS

Environment

This command can be issued from a z/OS console, a DSN session under TSO, a DB2I panel (DB2 COMMANDS), an IMS or CICS terminal, or a program that uses the instrumentation facility interface (IFI).

This command must be issued from the source or proxy data sharing group in an implementation of the GDPS Continuous Availability with zero data loss solution.

Data sharing scope: Group

Authorization

To execute this command, you must use a privilege set of the process that includes one of the following privileges or authorities:

- BSDS privilege
- SYSCTRL authority
- SYSADM authority

Db2 commands that are issued from a logged-on z/OS console or TSO SDSF can be checked by Db2 authorization using primary and secondary authorization IDs. A logged-on z/OS user ID must be defined in RACF or a similar security server.

Syntax

```
►►─ STOP CDDS ─►◄
```

Usage notes

Before you can recover a logically damaged CDDS without bringing down its data sharing group, you need to issue -STOP CDDS. See Recovering the compression dictionary data set without bringing down a Db2 data sharing group (Db2 Administration Guide) for more information.

Trace information for data sharing members

When this command with group scope is issued in a Db2 data sharing member, it also runs on all other active members. IFICID 090 trace records for other group members can show that the same command was issued by the SYSOPR authorization ID from the 016.TLPKN5F correlation ID, in addition to the trace records from the member where the original command was issued. See Command scope in Db2 data sharing (Db2 Data Sharing Planning and Administration).

Examples

Example: Making the CDDS unavailable to all members of a source data sharing group

Issue this command:

```
-STOP CDDS
```

© Copyright IBM Corp. 1983, 2024

If the command is successful, output like this is displayed:

```
DSNJ375I - DSNJB101 CDDS DSNAME = cdds-name IS INACTIVE IN SOURCE
MODE.

DSN9022I - DSNJC001 'STOP CDDS' NORMAL COMPLETION
```

Related tasks

Reading complete log data for the GDPS Continuous Availability with zero data loss solution (Db2 Administration Guide)

Chapter 88. -STOP DATABASE command (Db2)

The Db2 command STOP DATABASE makes the specified objects unavailable for applications and closes their data sets.

The objects that can be designated are:

- Databases
- Table spaces
- Index spaces
- Physical partitions of partitioned table spaces or index spaces (including index spaces that contains data-partitioned secondary indexes)
- Logical partitions of nonpartitioned secondary indexes

When used to stop a logical partition of a secondary index, the command does not close any data sets that are associated with the index.

In a data sharing environment, the command applies to every member of the data sharing group. If a GBP-dependent object is stopped with the command STOP DATABASE, Db2 performs the necessary processing to make the object no longer GBP-dependent.

Abbreviation: -STO DB

Environment

This command can be issued from a z/OS console, a DSN session under TSO, a DB2I panel (DB2 COMMANDS), an IMS or CICS terminal, or a program using the instrumentation facility interface (IFI).

Data sharing scope: Group

Authorization

To execute this command, you must use a privilege set of the process that includes one of the following privileges or authorities:

- STOPDB privilege
- DBMAINT authority
- DBCTRL authority
- DBADM authority
- System DBADM authority
- SYSCTRL authority
- SYSADM authority

Error messages are produced for those specified databases for which this set does not have the STOPDB privilege.

For implicitly created databases, the database privilege or authority can be held on the implicitly created database or on DSNDB04. If the STOP DATABASE command is issued on specific table spaces or index spaces in an implicitly created database, ownership of the table spaces is sufficient to stop them. This means that the owner can display information about an implicitly created table space or index space if the command explicitly specifies that table space or index space name.

Db2 commands that are issued from a logged-on z/OS console or TSO SDSF can be checked by Db2 authorization using primary and secondary authorization IDs. A logged-on z/OS user ID must be defined in RACF or a similar security server.

© Copyright IBM Corp. 1983, 2024

When data definition control is active, installation SYSOPR or installation SYSADM authority is required to stop the database, a table space, or an index space that contains a registration table or index.

Database DSNDB06 contains the table spaces and index spaces that are required to check authorization. If you stop any table space or index space that is required for the START DATABASE authorization check, installation SYSADM authority is required to restart it.

Syntax

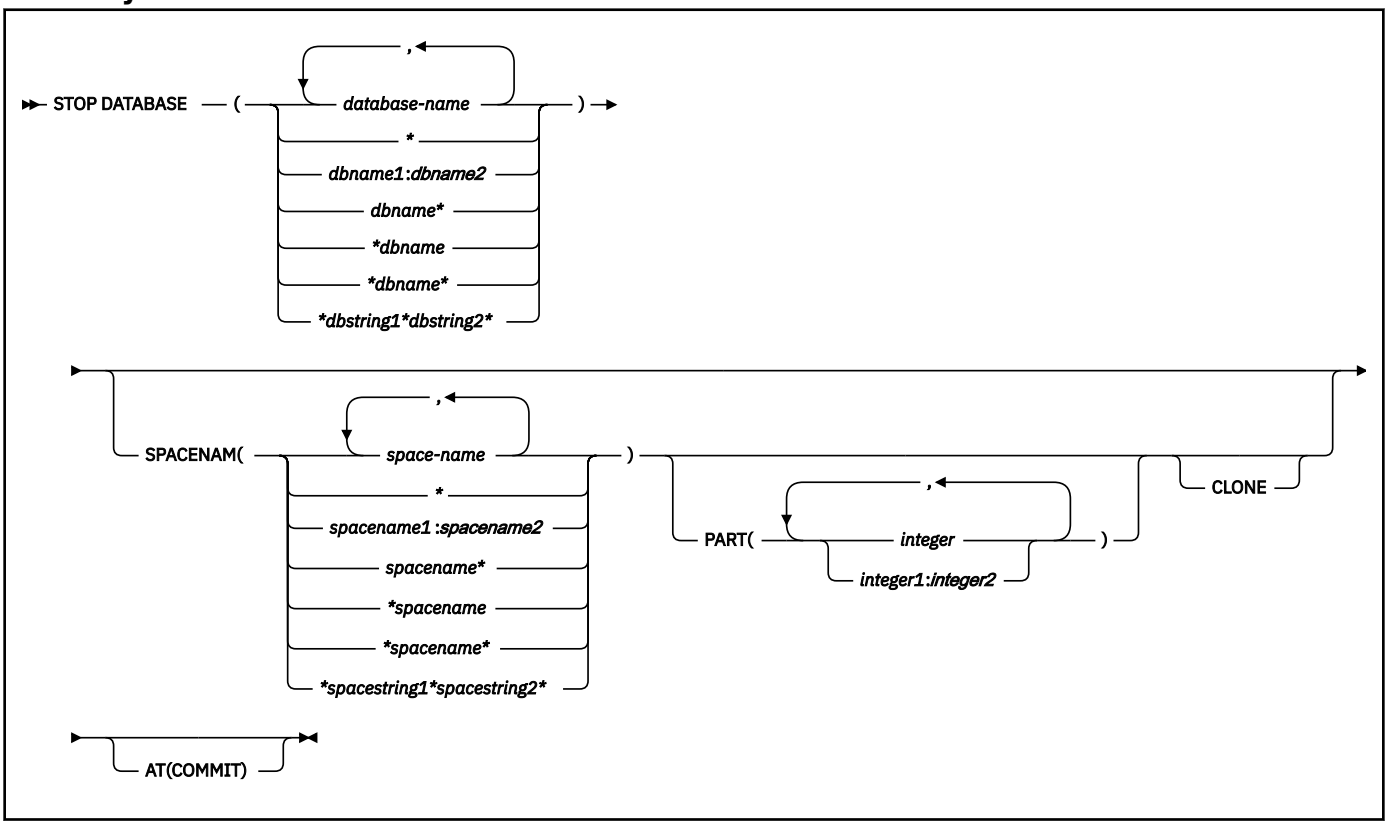

Option descriptions

One of the following two options is required.

(*database-name* , ...)
Specifies the names of the database, or database for the table spaces or index spaces to stop. The following variations are accepted:

(database-name, ...)
Identifies one or more database names, separated by commas or blanks.

(*)
All databases that are defined to the Db2 subsystem for which the privilege set of the process has the required authorization.

(*dbname1*:*dbname2*)
All databases whose names, in UNICODE, are between *dbname1* and *dbname2* inclusive.

(*dbname)**
All databases whose names begin with the string *dbname* that contains 1–7 characters.

(dbname*)**
All databases whose names end with the string *dbname* that contains 1–7 characters.

(dbname**)**
All databases whose names contain the string *dbname*,where *dbname* that contains 1–6 characters.

(*dbstring1*dbstring2*)
All databases whose names contain the strings *dbstring1* and *dbstring2* that together contain a total of 2–5 characters.

SPACENAM(*space-name* , ...)
Indicates names of table spaces or indexes within the specified database to stop.

Abbreviation: SPACE, SP

space-name
Is the name of one or more table spaces or index spaces to stop. The following variations are accepted: *spacename* and *spacestring* can have any of the forms in the following list (where *spacename1* and *spacename2* represent any strings of 1–8 characters, and *spacename* represents any string of 1–7 characters):

(spacename, ...)
One ore more index space names, separated by commas or blanks.

(*)
All table spaces or index spaces that are defined to the Db2 subsystem for which the privilege set of the process has the required authorization.

(*spacename1*:*spacename2*)
All table spaces or index spaces whose names, in UNICODE, are between *spacename1* and *spacename2* inclusive

(*spacename)**
All table spaces or index spaces whose names begin with the string *spacename* that contains 1–7 characters.

(spacename*)**
All table spaces or index spaces whose names end with the string *spacename* that contains 1–7 characters.

(spacename**)**
All table spaces or index spaces whose names contain the string *spacename* that contains 1–6 characters.

(spacestring1*spacestring2*)**
All table spaces or index spaces whose names contain the strings *spacestring1* and *spacestring2* that together contain a total of 2–5 characters.

PART (*integer* , ...)
Indicates the partition number of one or more partitions, within the specified table space or index, that are to be stopped. The START or STOP state of other partitions does not change.

The *integer* specified must identify a valid partition number for the corresponding space name and database name. If you specify nonvalid partition numbers, you receive an error message for each nonvalid number, but all valid partitions that you specified are stopped.

integer can be written to designate one of the following specifications:

- A list of one or more partitions
- A range of all partition numbers that collate greater than or equal to *integer1* and less than or equal to *integer2*
- A combination of lists and ranges

PART is valid with partitioned table spaces, partitioned indexes, and nonpartitioned type 2 indexes of partitioned table spaces. If you specify PART with a nonpartitioned table space or index on a nonpartitioned table space, you receive an error message, and the nonpartitioned space is not stopped. When a logical partition is stopped, the index is not closed. A nonpartitioning index must be stopped without the use of PART to close the index.

CLONE
Stops clone objects. In the absence of the CLONE keyword, base table objects are stopped and clone table objects are not processed. If you specify the CLONE keyword then only clone objects will be processed.

AT(COMMIT)
Marks the specified object as being in STOP status to prevent access from new requesters. Currently running applications are allowed to continue access until their next commit. After commit, further access by the committing application is prohibited. The object is actually stopped and put in STOP status when all jobs release their claims on it and all utilities release their drain locks on it. Specify AT(COMMIT) to break in on threads that are bound with RELEASE(DEALLOCATE), especially in situations where there is high thread reuse.

The option is ignored for declared temporary databases and table spaces within it.

Usage notes

Explicitly stopped databases
If table spaces and indexes are stopped explicitly (using the STOP DATABASE command with the SPACENAM option), they must be started explicitly using the START DATABASE command. Starting the database does not start table spaces or indexes that have been stopped explicitly.

Stopped table spaces, indexes, and partitions
Table spaces, indexes, and partitions are physically closed when the STOP DATABASE command is issued, except for logical partitions of a nonpartitioning index of a partitioned table space. Index spaces for declared temporary tables cannot be stopped or started.

Operation in TSO, z/OS, and batch

When the STOP DATABASE command is issued from a TSO or a z/OS console, the command operates asynchronously to keep the terminal free. When the command is issued from a batch job, it operates synchronously in case later steps depend on the database being stopped. The STOP DATABASE command drains work in progress on the database before stopping it. If it cannot get the drain locks on the first request, it repeatedly tries again. The command fails if it times out more than 15 times trying to get the locks or if a serious deadlock situation occurs.

Ensuring that all databases are stopped

When the STOP DATABASE command is processing asynchronously, message DSN9022I might be issued before the command completes. Message DSNT736I is issued to indicate that the asynchronous processing of the STOP DATABASE command is complete.

Use the DISPLAY DATABASE command to check the stopped status of table spaces and indexes in a database. A status of STOPP indicates that the object is in the process of being stopped. A status of STOP indicates that the stop has completed and the object is in a stopped state. An object is not stopped until all currently active threads accessing the object are quiesced.

An object might remain in the STOP pending (STOPP) status if the STOP DATABASE command does not successfully complete processing.

Stopping the communication database and the resource limit database
f the communication database (CDB) and the resource limit database (RLST) are active, they cannot be stopped. Those databases are active when created and are activated by Db2.

Stopping the SYSCONTX catalog table space or indexes on tables in the SYSCONTX catalog table space
If trusted contexts are in use when you stop SYSCONTX or the associated indexes, you can continue to use any trusted contexts that are already defined.

Stopping DSNDB01
If you try to stop the DSNDB01 database while an application plan or package is executing, you might receive a time out because of locking contention on DSNDB01. This is most likely to occur when an application plan or package is executing for the first time since Db2 was started, or if the skeleton

cursor table (SKCT) for the plan or the skeleton package table (SKPT) for the package was swapped out of the EDM pool.

Table space in a restrictive status
If an application process requests a transaction lock on a table space that is in a restrictive status (RECP) or has a required index in a restrictive status, Db2 acquires the lock and does not detect the status until the application tries to access the table space or index. The application then receives SQLCODE -904 ("resource not available") and should release the lock, either by committing or rolling back (if the value of the RELEASE option is COMMIT) or by ending (if the value of RELEASE is DEALLOCATE). If you issue the command STOP DATABASE for either the table space or the index space while a transaction lock is in effect, the command is suspended. It repeatedly tries to get the locks needed to drain the work in progress before stopping the database. If the command times out more than 15 times trying to get the locks, it fails.

Stopping a table space partition in PRO restricted status
When a table space that is in Persistent Read Only (PRO) restricted status is stopped, the partition remains in PRO restricted status.

After a disk failure

Issuing the STOP DATABASE command before interrupting the I/O interface between the failed device and Db2 can result in incomplete I/O requests. To prevent this hang situation, create an interruption either by forcing the device offline using the z/OS command VARY with the FORCE option, or by setting the I/O timing interval for the device before any failures. You can set the I/O timing interval through the IECIOSxx z/OS parmlib member or by issuing the z/OS command:

```
SETIOS MIH,DEV=dddd,IOTIMING=mm:ss
```

Stopping a LOB table space

The following table summarizes the locking used by the STOP DATABASE command.

Table 29. Locking used by the STOP DATABASE command

Command	Table space type		Locks acquired
STOP AT COMMIT	*Partitioned*	PART	Drain-all on partitions specified.
			Drain-all on all partitions.
	Nonpartitioned		Drain-all on table space.
STOP	*Partitioned*	PART	X-lock partitions specified. Drain-all on partitions specified.
			X-lock all partitions. Drain-all on all partitions.
	Nonpartitioned		X-lock table space. Drain-all on table space.

Trace information for data sharing members
When this command with group scope is issued in a Db2 data sharing member, it also runs on all other active members. IFICID 090 trace records for other group members can show that the same command was issued by the SYSOPR authorization ID from the 016.TLPKN5F correlation ID, in addition to the trace records from the member where the original command was issued. See Command scope in Db2 data sharing (Db2 Data Sharing Planning and Administration).

Examples

Example 1: Stop table space DSN8S81E in database DSN8D81A and close the data sets that belong to that table space.

```
-STOP DATABASE(DSN8D81A) SPACENAM(DSN8S81E)
```

Example 2: Stop all databases (except DSNDB01, DSNDB06, and work file databases)

```
-STOP DATABASE(*)
```

Example 3: Stop all databases (except DSNDB01, DSNDB06, and work file databases) when all jobs release their claims and all utilities release their drain locks.

```
-STOP DATABASE(*) AT(COMMIT)
```

Example 4: Stop the first partition of XEMP2, a nonpartitioning index of a partitioned table space in database DSN8D81A. Partition 1 is logically stopped and cannot be accessed by applications; however, no data sets are closed because parts of a nonpartitioning index are not associated with separate physical data sets.

```
-STOP DATABASE(DSN8D81A) SPACENAM(XEMP2) PART(1)
```

Example 5: Stop all table spaces with names that begin with "T" and end with the "IQUA03" string in database DSN8D81A.

```
-STOP DATABASE(DSN8D81A) SPACENAM(T*IQUA03)
```

Output similar to the following output indicates that the command completed successfully:

```
DSN9022I - DSNTDDIS 'STOP DATABASE' NORMAL COMPLETION
DSNT736I - ASYNCHRONOUS STOP DATABASE COMMAND HAS
COMPLETED FOR COMMAND: STOP DB(DSN8D81A) SPACE(T*IQUA03)
```

Example 6: Stop clone objects.

```
-STOP DATABASE(MYDB*) SPACENAM(MYDB*SP) CLONE
```

Chapter 89. -STOP DB2 command (Db2)

The Db2 command STOP DB2 stops the Db2 subsystem.

Abbreviation: -STO DB2

Environment

This command can be issued from a z/OS console, a DSN session, a DB2I panel (DB2 COMMANDS), an IMS or CICS terminal, or a program using the instrumentation facility interface (IFI).

Data sharing scope: Member

Authorization

To execute this command, you must use a privilege set of the process that includes one of the following privileges or authorities:

- STOPALL privilege
- SYSOPR authority
- SYSCTRL authority
- SYSADM authority

Db2 commands that are issued from a logged-on z/OS console or TSO SDSF can be checked by Db2 authorization using primary and secondary authorization IDs. A logged-on z/OS user ID must be defined in RACF or a similar security server.

Syntax

```
►► STOP DB2 ──┬──────────────────────────────────────────────────────────┬──►◄
              │                  ┌─ QUIESCE ─┐                           │
              └─ MODE( ──┬──────────────────────┬── ) ─┘   └─ CASTOUT( ──┬─ YES ─┬── ) ─┘
                         └─ FORCE ──────────────┘                         └─ NO ──┘
```

Option descriptions

MODE

Indicates whether currently executing programs will be allowed to complete. For the effects of this option on distributed threads see the description of the MODE option of Chapter 90, "-STOP DDF command (Db2)," on page 539.

(QUIESCE)

Allows currently executing programs to complete processing. No new program is allowed to start. If a utility starts a subtask after -STOP DB2 MODE (QUIESCE) has been issued, message DSNU006I is issued and the subtask and utility might end abnormally.

(FORCE)

Terminates currently executing programs, including utilities. No new program is allowed to start. MODE(FORCE) probably causes indoubt situations. Some tasks, such as stored procedures tasks and Db2 service tasks, terminate abnormally. When they terminate abnormally, you might see dumps and messages from these failures.

CASTOUT

Specifies whether the Db2 member performs castout processing for the page sets or partitions for which the member was last updated. The CASTOUT option only applies in a data sharing environment.

© Copyright IBM Corp. 1983, 2024

YES
Allow group buffer pool castout processing.

NO
Skip group buffer pool castout processing.

Usage notes

MODE(QUIESCE): If MODE(QUIESCE) is used, all connected address spaces must terminate all connections before the Db2 subsystem stops. The system operator can tell whether any connections remain by using the DISPLAY THREAD command, and can cancel them by using the Db2 CANCEL command or z/OS commands.

MODE(FORCE): A forced stop does not cause an immediate abend. If a connected task is executing outside Db2, Db2 posts an exit routine to stop the task from accessing Db2. If a task is executing in Db2, it stops when the next "suspend" or "execution unit switch" occurs. In some cases, the delay before stopping can be significant.

CASTOUT(NO): Consider using CASTOUT(NO) when shutting down a Db2 data sharing member for maintenance, because the option can speed shutdown processing in a data sharing environment. If you are shutting down multiple members of a data sharing group with CASTOUT(NO), some changed data might reside in the group buffer pools after the members have shut down. Therefore, if you want consistent data on disk (for example, you are shutting down all members to create a copy of the database to send offsite), do not use CASTOUT(NO).

With CASTOUT(NO), the Db2 member shuts down with QC status, as displayed by the DISPLAY GROUP command, which indicates that the member quiesced with some castout processing not completed. A retained page set or partition P-lock is held in IX state for each object for which the Db2 member was the last updater. Also, group buffer pool connections enter a failed-persistent state.

Example

Example 1: Stop the Db2 subsystem. Allow currently active programs to complete. Do not allow new programs to identify to Db2.

```
-STOP DB2 MODE (QUIESCE)
```

Example 2: Stop a member of a data sharing group for maintenance.

```
-STOP DB2 MODE (QUIESCE) CASTOUT(NO)
```

Chapter 90. -STOP DDF command (Db2)

The Db2 command STOP DDF stops the distributed data facility (DDF) if it has already been started; use this command to terminate the DDF interface to VTAM or TCP/IP.

Abbreviation: -STO DDF

Environment

This command can be issued from a z/OS console, a DSN session under TSO, a DB2I panel (DB2 COMMANDS), an IMS or CICS terminal, or a program using the instrumentation facility interface (IFI).

Data sharing scope: Member

Authorization

To execute this command, you must use a privilege set of the process that includes one of the following authorities:

- SYSOPR authority
- SYSCTRL authority
- SYSADM authority

Db2 commands that are issued from a logged-on z/OS console or TSO SDSF can be checked by Db2 authorization using primary and secondary authorization IDs. A logged-on z/OS user ID must be defined in RACF or a similar security server.

Syntax

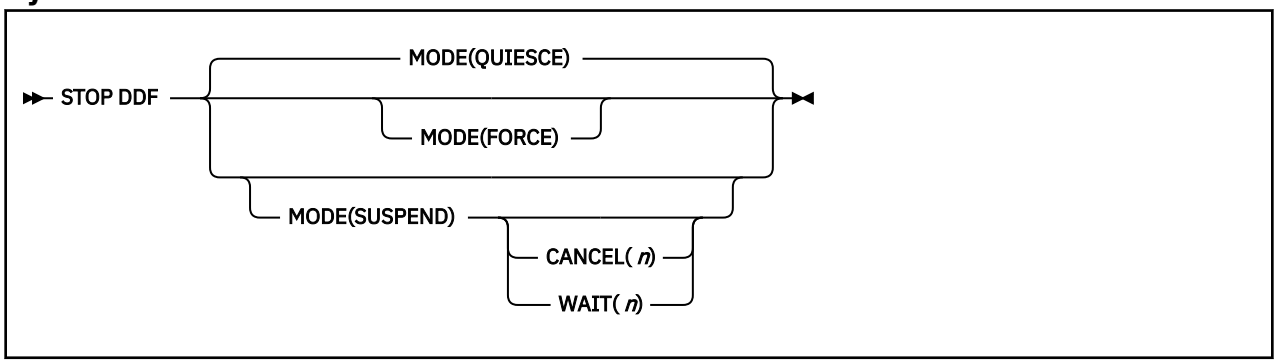

Option descriptions

MODE

Indicates whether currently executing active distributed threads are allowed to complete.

(QUIESCE)

Allows active distributed threads that are using DDF to complete normally and terminates only inactive distributed threads. If DDF THREADS ACTIVE (the CMTSTAT subsystem parameter) was specified during Db2 installation , all DDF threads are active threads.

Deprecated function: The CMTSTAT subsystem parameter is deprecated, which means that it might be removed eventually. Set the CMTSTAT value to INACTIVE. Although, the ACTIVE setting can sometimes provide limited CPU performance advantages, they are generally outweighed by increased use of other system resources and the lack of scalability for distributed application workloads. For the recommended alternatives to the ACTIVE setting, see Enabling KEEPDYNAMIC refresh for DBATs (Db2 Performance) and Enabling high-performance DBATs (Db2 Performance).

© Copyright IBM Corp. 1983, 2024

(FORCE)
Terminates all currently executing distributed threads.

Some tasks, such as stored procedures tasks and Db2 service tasks, terminate abnormally. When they terminate abnormally, you might see dumps and messages resulting from these failures.

(SUSPEND)
Suspends all DDF threads by:

- Keeping inactive DDF threads inactive until a subsequent START DDF command is issued
- Terminating all DDF pool threads
- Preventing inbound DDF work from starting

MODE(SUSPEND) is intended to be used at a Db2 DRDA server when locking conflicts exist between CREATE, ALTER, DROP, GRANT, or REVOKE operations and client access to data. Requests that normally cause work to be dispatched (including requests for new connections) are queued. Outbound DDF processing is not affected by this command.

CANCEL (*n*)
Cancels all active DDF database access threads if suspend processing does not complete in *n* seconds. The range of *n* is 0 to 9999.

WAIT (*n*)
Resumes DDF processing if suspend processing does not complete in *n* seconds. The range of *n* is 0 to 9999.

Usage notes

MODE(QUIESCE): If MODE(QUIESCE) is used, all distributed activity must complete before DDF stops. The operator can tell whether any distributed threads remain by using DISPLAY THREAD with the LOCATION option. To cancel distributed threads that are preventing DDF from stopping, use CANCEL THREAD or STOP DDF MODE(FORCE).

MODE(QUIESCE) forces any inactive threads to terminate. A requesting system that is using two-phase commit on an inactive thread might report the terminated thread as indoubt at the system that issued STOP DDF. The thread is not actually indoubt (no commit or rollback is pending), and the condition is resolved when DDF is restarted.

MODE(FORCE): If MODE(FORCE) is used, the Db2 connection to VTAM or TCP/IP terminates. The termination forces all VTAM or TCP/IP requests to complete immediately, indicating that a communications error has occurred and DDF has stopped. A forced stop might take as long as three minutes to complete.

If any applications are updating remote servers that use two-phase commit, MODE(FORCE) might result in indoubt threads at each server.

MODE(SUSPEND): If MODE(SUSPEND) completes successfully, additional database resources, which are not inbound DDF work, might still be held. Cancel these additional resources with CANCEL THREAD.

The following table summarizes the actions that Db2 takes when START DDF, STOP DDF, START DB2, and STOP DB2 commands are issued with different DDF states.

Table 30. The result of commands on the DDF status

DDF status	START DDF command	STOP DB2 or STOP DDF command without MODE(FORCE)	STOP DB2 or STOP DDF command with MODE(FORCE)	STOP DDF command with MODE(SUSPEND)
Starting	DSNL003I	DSNL003I	DSNL003I	DSNL003I
Started	DSNL001I	DDF stops	DDF forced stop	DDF suspends
Stopping	DSNL005I	DSNL005I	DSNL005I	DSNL005I

Table 30. The result of commands on the DDF status (continued)

DDF status	START DDF command	STOP DB2 or STOP DDF command without MODE(FORCE)	STOP DB2 or STOP DDF command with MODE(FORCE)	STOP DDF command with MODE(SUSPEND)
Stopped	DDF starts	DSNL002I	DSNL002I	DSNL002I
Suspending	DDF resumes	DDF stops	DDF forced stop	DSNL069I
Suspended	DDF resumes	DDF stops	DDF forced stop	DSNL065I

Examples

Example 1

Stop the distributed data facility (MODE QUIESCE).

```
-STOP DDF
```

Example 2

Stop the distributed data facility (MODE FORCE).

```
-STOP DDF MODE(FORCE)
```

Example 3

Suspend distributed data facility activity (MODE SUSPEND). If command processing continues after 600 seconds, cancel any remaining DDF threads.

```
-STOP DDF MODE(SUSPEND) CANCEL(600)
```

Related concepts

Starting and stopping DDF in data sharing (Db2 Data Sharing Planning and Administration)

Related tasks

Stopping DDF (Db2 Administration Guide)

Related reference

-START DDF command (Db2)

The Db2 command START DDF starts the distributed data facility (DDF) if it is not already started.

DDF STARTUP OPTION field (DDF subsystem parameter) (Db2 Installation and Migration)

Chapter 91. -STOP DYNQUERYCAPTURE command (Db2)

The Db2 command STOP DYNQUERYCAPTURE stops the capture of dynamic SQL statements by the specified monitors.

Abbreviation: -STO DYNQUERY

Authorization

To execute this command, you must use a privilege set of the process that includes one of the following authorities:

- SQLADM authority
- System DBADM authority
- SYSOPR authority
- SYSCTRL authority
- SYSADM authority

Environment

This command can be issued from the z/OS console, through a batch job, or the instrumentation facility interface (IFI).

Data sharing scope: Member

Syntax

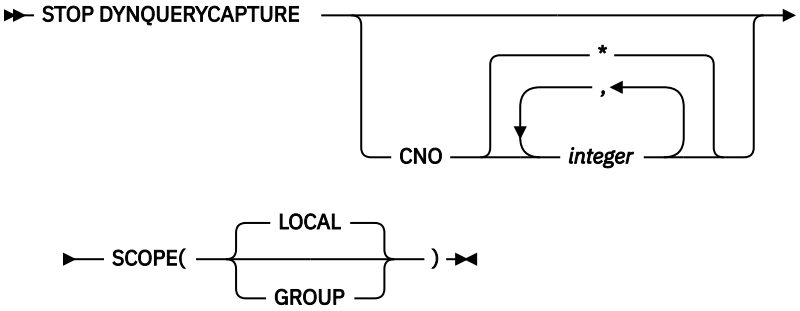

Option descriptions

CNO(*integer*)
Stop a particular capture number, a list of capture numbers, or display all capture numbers.

*****
Stop all active capture monitors.

integer
Stop the specified active capture monitors.

SCOPE
Specifies the scope of the command.

LOCAL
Stops the capture on the local Db2 system only.

© Copyright IBM Corp. 1983, 2024

GROUP
Stops the capture on all members of the data sharing group.

Output

Message DSNX224I is issued at successful completion of the STOP DYNQUERYCAPTURE command processing. For example, assume that you issue the following command:

```
-DB2ASTOP DYNQUERY CNO(1)
```

The following message is issued:

```
DSNX224I -DB2A DSNXESPC STOP DYNAMIC QUERY CAPTURE FOR COMMAND
NUMBER (1) COMPLETED SUCCESSFULLY, WITH 1 QUERY CAPTURES STOPPED.
```

Similarly, assume that you issue the following command:

```
-DB2ASTOP DYNQUERY CNO(1)
```

The following message might be issued:

```
DSNX224I -DB2A DSNXESPC STOP DYNAMIC QUERY CAPTURE FOR COMMAND
NUMBER (*) COMPLETED SUCCESSFULLY, WITH 2 QUERY CAPTURES STOPPED.
```

Message DSNX225I is issued if an active monitor process with specified *command-number* is not found. For example, assume that you issue the following command:

```
-DB2ASTOP DYNQUERY CNO(43)
```

If no matching active monitor process is found, the following message is issued:

```
DSNX225I -DB2A DSNXESPC STOP DYNAMIC QUERY CAPTURE FOR COMMAND
NUMBER (43) FAILED. QUERY CAPTURE NUMBER (43) COULD NOT BE FOUND.
```

Related concepts

Dynamic SQL plan stability (Db2 Performance)

Related tasks

Stabilizing access paths for dynamic SQL statements (Db2 Performance)

Related reference

-START DYNQUERYCAPTURE command (Db2)
The Db2 command START DYNQUERYCAPTURE stabilizes access paths for qualified cached dynamic queries. This command can also optionally start monitoring of cached dynamic queries that qualify for a scope but have not met the specified execution threshold for stabilization.

-DISPLAY DYNQUERYCAPTURE command (Db2)
The Db2 command DISPLAY DYNQUERYCAPTURE displays all currently active dynamic query capture monitors.

FREE STABILIZED DYNAMIC QUERY subcommand (DSN)
The DSN subcommand FREE STABILIZED DYNAMIC QUERY removes from certain catalog tables one or more stabilized dynamic queries. If any of the specified queries are in the dynamic statement cache, FREE STABILIZED DYNAMIC QUERY also purges the statements from the dynamic statement cache.

Related information

DSNX224I (Db2 Messages)

DSNX225I (Db2 Messages)

Chapter 92. -STOP FUNCTION SPECIFIC command (Db2)

The Db2 command STOP FUNCTION SPECIFIC prevents Db2 from accepting SQL statements with invocations of the specified functions.

This command does not prevent SQL statements with invocations of the functions from running if they have already been queued or scheduled by Db2. You cannot use this command to stop built-in functions or user-defined functions that are sourced on another function.

Db2 implicitly issues the command STOP FUNCTION SPECIFIC ACTION(REJECT) for any function that exceeds the maximum abend count. That count is set by the MAX ABEND COUNT field of installation panel DSNTIPX.

Abbreviation: -STO FUNC SPEC

Environment

This command can be issued from a z/OS console, a DSN session under TSO, a DB2I panel (DB2 COMMANDS), an IMS or CICS terminal, or a program using the instrumentation facility interface (IFI).

Data sharing scope: Group or member

Authorization

To execute this command, you must use a privilege set of the process that includes one of the following authorities for each function:

- Ownership of the function
- System DBADM authority
- SYSOPR authority
- SYSCTRL authority
- SYSADM authority

If you specify STOP FUNCTION SPECIFIC *.* or *schema.partial-name* *, the privilege set of the process must include one of the following authorities:

- SYSOPR authority
- SYSCTRL authority
- SYSADM authority

Db2 commands that are issued from a logged-on z/OS console or TSO SDSF can be checked by Db2 authorization using primary and secondary authorization IDs. A logged-on z/OS user ID must be defined in RACF or a similar security server.

© Copyright IBM Corp. 1983, 2024

Syntax

```
STOP FUNCTION SPECIFIC ┬─(*.*)──────────────────────────────────┬──►
                       │                  ┌──────────────────┐
                       │                  ▼                  │
                       └─(──┬─schema.specific-function-name─┬─┴─,◄─┬─)─┘
                            └─schema.partial-name*──────────┘

►──┬──────────────────────────────────────────────────────────────────┬──►◄
   │                   ┌─QUEUE──┐                   ┌─LOCAL──┐         │
   └─ACTION──(──┬──────┴─REJECT─┴──)──┘   └─SCOPE──(──┬──────┴──)──┘
                └─REJECT─┘                            └─GROUP─┘
```

Option descriptions

(*.*)

Stops access to all functions, including functions that Db2 applications have not yet accessed.

If no functions are named, all functions are stopped.

schema.specific-function-name

Stops one specific function name. You cannot specify a function name as you can in SQL; you must use the specific name. If a specific name was not specified on the CREATE FUNCTION statement, query SYSIBM.SYSROUTINES for the correct specific name:

```
SELECT SPECIFICNAME, PARM_COUNT
  FROM SYSIBM.SYSROUTINES
   WHERE NAME='function_name'
    AND SCHEMA='schema_name';
```

For overloaded functions, this query can return multiple rows.

schema.partial-name *

Stops a set of functions in the specified schema. The specific names of all functions in the set begin with *partial-name* and can end with any string, including the empty string. For example, schema1.ABC* stops all functions with specific names that begin with ABC in schema1.

ACTION

Indicates what to do with an SQL statement that invokes the function while the function is stopped. If you issue STOP FUNCTION SPECIFIC more than once for a given function, the action that is taken is determined by the ACTION option on the most recent command.

(QUEUE)

Queues the request until either of the following conditions is true:

- The wait exceeds the installation timeout value.
- You issue START FUNCTION SPECIFIC command for the function.

(REJECT)

Rejects the request.

SCOPE

Specifies the scope of the command.

(LOCAL)

Specify to stop the function on the local member only.

(GROUP)

Specify to stop the function on all members of the data sharing group.

Usage notes

Limitations of STOP FUNCTION SPECIFIC

STOP FUNCTION SPECIFIC is only applicable to external functions that run in the WLM application environment or non-inline SQL functions. STOP FUNCTION SPECIFIC cannot stop a built-in function, an inline SQL function, or a user-defined function that is sourced on another function.

Permanently disabling a function

A stopped function does not remain stopped if Db2 is stopped and restarted. To disable a function permanently, you can:

- Use ALTER FUNCTION to change the LOADMOD name to a nonexistent z/OS load module
- Rename or delete the z/OS load module

Considerations for SQL functions

The STOP FUNCTION SPECIFIC command affects all versions of the SQL functions that you specify in the command.

Trace information for commands issued with group scope

If this command is issued with options that specify group scope in a Db2 data sharing member, it also runs on all other active members. IFICID 090 trace records for other group members can show that the same command was issued by the SYSOPR authorization ID from the 016.TLPKN5F correlation ID, in addition to the trace records from the member where the original command was issued. See Command scope in Db2 data sharing (Db2 Data Sharing Planning and Administration).

Examples

Example 1: Stop access to all functions. While the STOP FUNCTION SPECIFIC command is in effect, Db2 queues all attempts to execute functions.

```
-STOP FUNCTION SPECIFIC ACTION(QUEUE)
```

This command produces output similar to the following output:

```
DSNX974I - DSNX9SP2 STOP FUNCTION SPECIFIC SUCCESSFUL FOR *.*
DSN9022I - DSNX9COM '-STOP FUNC' NORMAL COMPLETION
```

Example 2: Stop access to all functions. While the STOP FUNCTION SPECIFIC command is in effect, Db2 rejects attempts to execute functions.

```
-STOP FUNCTION SPECIFIC ACTION(REJECT)
```

This command produces output similar to the following output:

```
DSNX974I - DSNX9SP2 STOP FUNCTION SPECIFIC SUCCESSFUL FOR *.*
DSN9022I - DSNX9COM '-STOP FUNC' NORMAL COMPLETION
```

Example 3: Stop functions PAYROLL.USERFN1 and PAYROLL.USERFN3. While the STOP FUNCTION SPECIFIC command is in effect, Db2 queues all attempts to execute functions.

```
-STOP FUNCTION SPECIFIC(PAYROLL.USERFN1,PAYROLL.USERFN3)
```

This command produces output similar to the following output:

```
DSNX974I - DSNX9SP2 STOP FUNCTION SPECIFIC SUCCESSFUL
FOR PAYROLL.USERFN1

DSNX974I - DSNX9SP2 STOP FUNCTION SPECIFIC SUCCESSFUL
FOR PAYROLL.USERFN3

DSN9022I - DSNX9COM '-STOP FUNC' NORMAL COMPLETION
```

Example 4: Stop functions PAYROLL.USERFN1 and PAYROLL.USERFN3. While the STOP FUNCTION SPECIFIC command is in effect, Db2 rejects attempts to execute either of these functions.

```
-STOP FUNCTION SPECIFIC(PAYROLL.USERFN1,PAYROLL.USERFN3) ACTION(REJECT)
```

This command produces output similar to the following output:

```
DSNX974I - DSNX9SP2 STOP FUNCTION SPECIFIC SUCCESSFUL
FOR PAYROLL.USERFN1

DSNX974I - DSNX9SP2 STOP FUNCTION SPECIFIC SUCCESSFUL
FOR PAYROLL.USERFN3

DSN9022I - DSNX9COM '-STOP FUNC' NORMAL COMPLETION
```

Chapter 93. STOP *irlmproc* command (z/OS IRLM)

The STOP *irlmproc* command shuts IRLM down normally. The command is rejected if any active Db2 subsystems are currently identified to IRLM.

Abbreviation: P

Environment

This command can be issued only from a z/OS console.

Data sharing scope: Member

Authorization

The command requires an appropriate level of operating system authority.

Syntax

```
►►─ STOP ── irlmproc ─►◄
```

Option description

irlmproc
Identifies the procedure name for the IRLM to be stopped.

Usage note

Terminating the IRLM: If IRLM does not shut down normally, issue the MODIFY irlmproc,ABEND command to terminate the IRLM abnormally:

```
F irlmproc,ABEND,DUMP
```

If outstanding Db2 requests are in process and IRLM does not terminate, use the z/OS CANCEL command. If all other means of removing the subsystem fail, issue the z/OS FORCE CANCEL command.

Example

Enter the following command on the system console:

```
P KRLM1
```

IRLM outputs the following responses on system console:

```
DXR165I IR21 TERMINATED VIA IRLM MODIFY COMMAND
DXR121I IR21 END-OF-TASK CLEANUP SUCCESSFUL - HI-CSA     325K
```

In a data sharing environment: You cannot issue the STOP irlmproc command to IRLM in a data sharing group until no Db2 subsystems are identified to that IRLM and the IRLM issues the following messages:

```
DXR136I IR21 HAS DISCONNECTED FROM THE DATA SHARING GROUP
```

Any members that are still active in the group issue:

```
DXR137I JR21 GROUP STATUS CHANGED. IR21 233 HAS BEEN DISCONNECTED
FROM THE DATA SHARING GROUP
```

© Copyright IBM Corp. 1983, 2024

Chapter 94. -STOP ML command (Db2)

The Db2 command STOP ML stops the Db2 functions used by IBM Db2 AI for z/OS, if IBM Db2 AI for z/OS has already been started.

Abbreviation: -STO ML

Environment

This command can be issued from a z/OS console, a DSN session under TSO, a DB2I panel (DB2 COMMANDS), an IMS or CICS terminal, or a program using the instrumentation facility interface (IFI).

Data sharing scope: Group

Authorization

To execute this command, you must use a privilege set of the process that includes one of the following authorities:

- SQLADM authority
- System DBADM authority
- SYSOPR authority
- SYSCTRL authority
- SYSADM authority

Db2 commands that are issued from a logged-on z/OS console or TSO SDSF can be checked by Db2 authorization using primary and secondary authorization IDs. A logged-on z/OS user ID must be defined in RACF or a similar security server.

Syntax

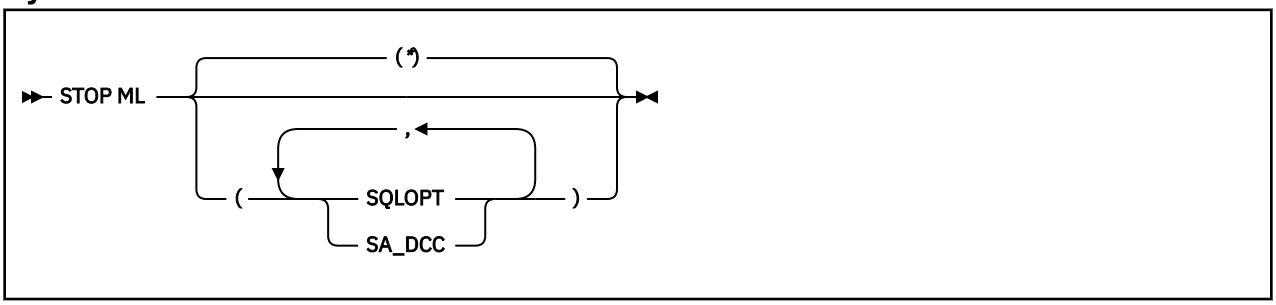

Option descriptions

*****
Deactivates all Db2 functions used by IBM Db2 AI for z/OS functions. This is the default.

SQLOPT
Deactivates the SQL optimization function of IBM Db2 AI for z/OS.

SA_DCC
Deactivates data collection for both the system assessment and distributed connection control functions of IBM Db2 AI for z/OS.

Usage note

The STOP ML command deactivates IBM Db2 AI for z/OS. In a data sharing environment, this command disables IBM Db2 AI for z/OS on all members in the data sharing group.

© Copyright IBM Corp. 1983, 2024

Examples

Example 1

Deactivate all Db2 functions used by IBM Db2 AI for z/OS in all members of the data sharing group.

```
-STOP ML (*)
```

Example 2

Deactivate the system assessment and distributed connection control functions in all members of the data sharing group.

```
-STOP ML (SA_DCC)
```

Example 3

Deactivate the SQL optimization, system assessment, and distributed connection control functions in all members of the data sharing group.

```
-STOP ML (SQLOPT, SA_DCC)
```

Related reference

"-START ML command (Db2)" on page 491
The Db2 command START ML starts the Db2 functions used by IBM Db2 AI for z/OS.

"-DISPLAY ML command (Db2)" on page 265
The Db2 command DISPLAY ML displays the current status of IBM Db2 AI for z/OS.

Chapter 95. -STOP PROCEDURE command (Db2)

The Db2 command STOP PROCEDURE prevents Db2 from accepting SQL CALL statements for one or more stored procedures.

You can qualify stored procedure names with a schema name. This command does not prevent CALL statements from running if they have already been queued or scheduled by Db2.

Db2 implicitly issues the command STOP PROCEDURE ACTION(REJECT) for any stored procedure that exceeds the maximum abend count. That count is set by the MAX ABEND COUNT field of installation panel DSNTIPX.

Abbreviation: -STO PROC

Environment

This command can be issued from a z/OS console, a DSN session under TSO, a DB2I panel (DB2 COMMANDS), an IMS or CICS terminal, or a program using the instrumentation facility interface (IFI).

Data sharing scope: Group or member

Authorization

To execute this command, you must use a privilege set of the process that includes one of the following authorities:

- Ownership of the stored procedure
- System DBADM authority
- SYSOPR authority
- SYSCTRL authority
- SYSADM authority

If you specify STOP PROCEDURE *.* or *schema.partial-name* *, the privilege set of the process must include one of the following authorities:

- SYSOPR authority
- SYSCTRL authority
- SYSADM authority

Db2 commands that are issued from a logged-on z/OS console or TSO SDSF can be checked by Db2 authorization using primary and secondary authorization IDs. A logged-on z/OS user ID must be defined in RACF or a similar security server.

© Copyright IBM Corp. 1983, 2024

Syntax

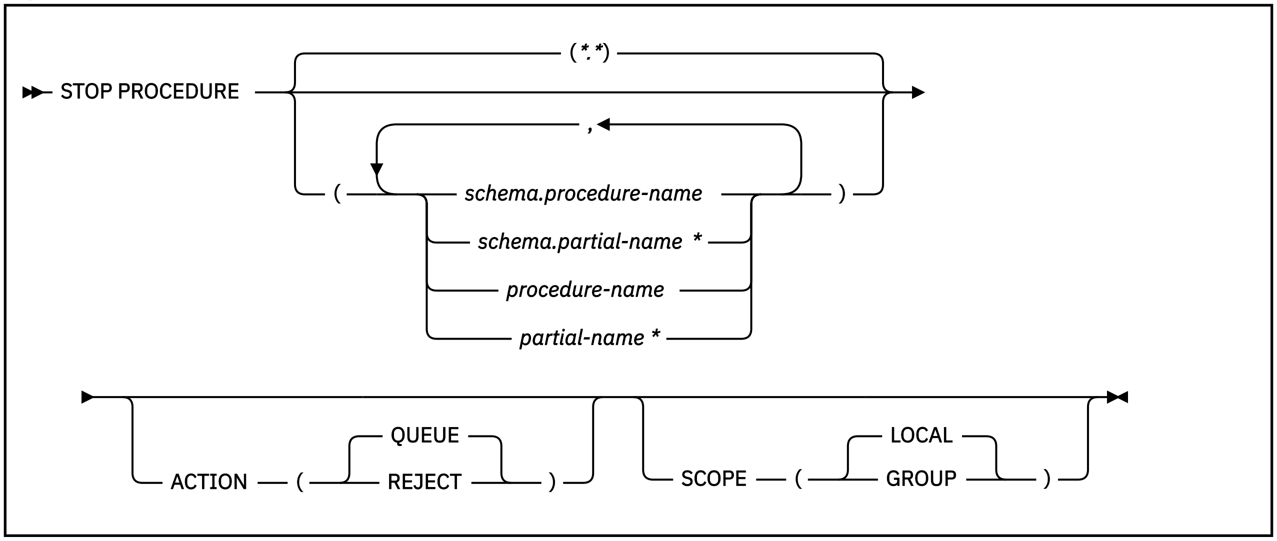

Option descriptions

(*.*)
: Stops access to all stored procedures in all schemas, including procedure definitions that have not yet been accessed by Db2 applications.

(*schema.procedure-name*)
: Identifies the fully-qualified procedure name that is to be stopped.

(*schema.partial-name* *)
: Stops a set of stored procedures in the specified schema. The names of all procedures in the set begin with *partial-name* and can end with any string, including the empty string. For example, PAYROLL.* stops all stored procedures in the PAYROLL schema.

procedure-name
: Identifies one or more specific stored procedure names to be stopped. The procedure name is implicitly qualified with the SYSPROC schema name.

***partial-name* ***
: Stops a set of stored procedures within the SYSPROC schema. The names of all procedures in the set begin with *partial-name* and can end with any string, including the empty string. For example, ABC* stops all stored procedures with names that begin with ABC.

ACTION
: Indicates what to do with a CALL statement that is received while the procedure is stopped. If STOP PROCEDURE is issued more than once for a given procedure, the action taken is determined by the ACTION option on the most recent command.

(QUEUE)
: Queues the request until either:

- The wait exceeds the installation timeout value, or
- The stored procedure is started by the command START PROCEDURE.

(REJECT)
: Rejects the request

SCOPE
: Specifies the scope of the command.

(LOCAL)
: Specify to stop the procedure on the local member only.

(GROUP)
: Specify to stop the procedure on all members of the data sharing group.

Usage notes

Permanently disabling a stored procedure

A stopped procedure does not remain stopped if Db2 is stopped and restarted. To disable a stored procedure permanently, you can:

- Drop the procedure using the DROP PROCEDURE statement.
- Use an ALTER PROCEDURE statement.
- Rename or delete the z/OS load module.

Considerations for native SQL procedures

The STOP PROCEDURE command affects all versions of the native SQL procedures that you specify in the command.

Trace information for commands issued with group scope

If this command is issued with options that specify group scope in a Db2 data sharing member, it also runs on all other active members. IFICID 090 trace records for other group members can show that the same command was issued by the SYSOPR authorization ID from the 016.TLPKN5F correlation ID, in addition to the trace records from the member where the original command was issued. See Command scope in Db2 data sharing (Db2 Data Sharing Planning and Administration).

Examples

Example 1: Stop access to all stored procedures, and terminate the Db2 stored procedures address space. While the STOP PROCEDURE command is in effect, attempts to execute stored procedures are queued.

```
-STOP PROCEDURE ACTION(QUEUE)
```

```
DSNX947I - DSNX9SP2 STOP PROCEDURE SUCCESSFUL FOR *.*
DSN9022I - DSNX9COM '-STOP PROC' NORMAL COMPLETION
```

Example 2: Stop access to all stored procedures, and terminate the Db2 stored procedures address space. While the STOP PROCEDURE command is in effect, attempts to execute stored procedures are rejected.

```
-STOP PROCEDURE ACTION(REJECT)
```

```
DSNX947I - DSNX9SP2 STOP PROCEDURE SUCCESSFUL FOR *.*
DSN9022I - DSNX9COM '-STOP PROC' NORMAL COMPLETION
```

Example 3: Stop stored procedures USERPRC1 and USERPRC3. While the STOP PROCEDURE command is in effect, attempts to execute these stored procedure are queued.

```
-STOP PROCEDURE(USERPRC1,USERPRC3)
```

```
DSNX947I - DSNX9SP2 STOP PROCEDURE SUCCESSFUL FOR USERPRC1
DSNX947I - DSNX9SP2 STOP PROCEDURE SUCCESSFUL FOR USERPRC3
DSN9022I - DSNX9COM '-STOP PROC' NORMAL COMPLETION
```

Example 4: Stop stored procedures USERPRC1 and USERPRC3. While the STOP PROCEDURE command is in effect, attempts to execute these stored procedure are rejected.

```
-STOP PROCEDURE(USERPRC1,USERPRC3) ACTION(REJECT)
```

```
DSNX947I - DSNX9SP2 STOP PROCEDURE SUCCESSFUL FOR USERPRC1
DSNX947I - DSNX9SP2 STOP PROCEDURE SUCCESSFUL FOR USERPRC3
DSN9022I - DSNX9COM '-STOP PROC' NORMAL COMPLETION
```

Chapter 96. -STOP PROFILE command (Db2)

The Db2 command STOP PROFILE is used to stop or disable the profile function.

Tip: For best results, do not issue a STOP PROFILE command when you add or modify existing profiles. Use the STOP PROFILE command only if you intend to disable all existing profiles.

Environment

This command can be issued from the z/OS console, through a batch job or the instrumentation facility interface (IFI).

Data sharing scope: Member

Authorization

To execute this command, you must use a privilege set of the process that includes one of the following authorities:

- SQLADM authority
- System DBADM authority
- SYSOPR authority
- SYSCTRL authority
- SYSADM authority

Syntax

```
►►─ STOP PROFILE ─►◄
```

Examples

Example 1: This command is used to stop or disable the profile function.

```
-STOP PROFILE
```

Related tasks

Monitoring and controlling Db2 by using profile tables (Db2 Administration Guide)

Related reference

Profile tables (Db2 Performance)

-START PROFILE command (Db2)

The Db2 command START PROFILE loads or reloads the profile table into a data structure in memory.

© Copyright IBM Corp. 1983, 2024

Chapter 97. -STOP RLIMIT command (Db2)

The Db2 command STOP RLIMIT stops the resource limit facility.

All previously limited SQL statements run without limits. However, the processing time continues to accumulate for statements that continue to run after the STOP RLIMIT command is issued.

Abbreviation: -STO RLIM

Environment

This command can be issued from a z/OS console, a DSN session under TSO, a DB2I panel (DB2 COMMANDS), an IMS or CICS terminal, or a program using the instrumentation facility interface (IFI).

Data sharing scope: Member

Authorization

To execute this command, you must use a privilege set of the process that includes one of the following authorities:

- SYSOPR authority
- SYSCTRL authority
- SYSADM authority

Db2 commands that are issued from a logged-on z/OS console or TSO SDSF can be checked by Db2 authorization using primary and secondary authorization IDs. A logged-on z/OS user ID must be defined in RACF or a similar security server.

Syntax

```
►►─ STOP RLIMIT ─►◄
```

Example

Stop the resource limit facility.

```
-STOP RLIMIT
```

Related tasks

Starting and stopping resource limit tables (Db2 Performance)

Specifying and changing resource limits (Db2 Performance)

Related reference

-START RLIMIT command (Db2)
The Db2 command START RLIMIT starts the resource limit facility (governor) and specifies a resource limit specification table for the facility to use.

-DISPLAY RLIMIT command (Db2)
The Db2 command DISPLAY RLIMIT displays the current status of the resource limit facility (governor).

© Copyright IBM Corp. 1983, 2024

Chapter 98. -STOP RESTSVC command (Db2)

The Db2 command STOP RESTSVC prevents Db2 from accepting any new discover details or invoke requests for one or more REST services. You can qualify REST service names with a collection ID name.

On successful completion of the command, the specified REST services will be stopped and any new requests for the specified REST services will fail with an HTTP 503 (Resource unavailable) return status.

Abbreviation: -STO RESTSVC

Environment

This command can be issued from a z/OS console, a DSN session under TSO, a DB2I panel (Db2 COMMANDS), an IMS or CICS terminal, or a program using the instrumentation facility interface (IFI).

Data sharing scope: Group

Authorization

To execute this command, you must use a privilege set of the process that includes one of the following authorities:

- System DBADM authority
- SYSOPR authority
- SYSCTRL authority
- SYSADM authority

Db2 commands that are issued from a logged-on z/OS console or TSO SDSF can be checked by Db2 authorization using primary and secondary authorization IDs. A logged-on z/OS user ID must be defined in RACF or a similar security server.

Syntax

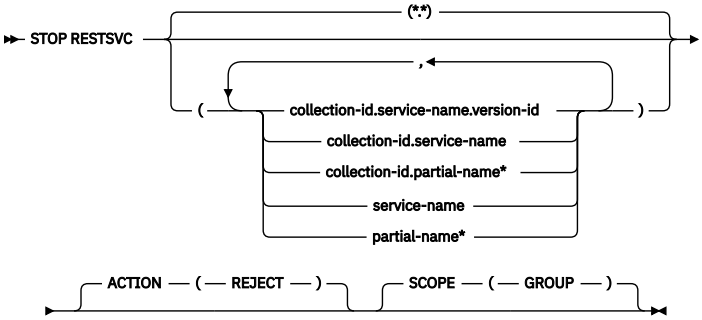

Option descriptions

For mixed case names, use single quotes (') around the input.

(*.*)
Marks all versions of all REST services in all collection-ids as stopped and unavailable to be called. Note: when specified, *.* can be the only SERVICE parameter.

(collection-id.service-name.version-id)
Stops a specific version of the specified REST service in the specified collection-id.

(collection-id.service-name)
Stops all versions of the specified REST service in the specified collection-id.

© Copyright IBM Corp. 1983, 2024

(collection-id.partial-name*)
Stops all versions in a set of REST services in the specified collection-id. The names of all REST services in the set begin with partial-name and can end with any string, including the empty string. For example, PAYROLL.ABC* starts all REST services with names that begin with ABC in the PAYROLL collection-id.

(service-name)
Stops all versions of the specified REST service in the SYSIBMSERVICE collection-id.

(partial-name*)
Marks all versions in a set of REST services in the SYSIBMSERVICE collection-id as stopped and unavailable to be called. The names of all REST services in the set begin with partial-name and can end with any string, including the empty string. For example,ABC* starts all REST services names that begin with ABC in the SYSIBMSERVICE collection-id.

ACTION
Indicates what to do with a REST discover or invoke request that is received while the REST service is stopped.

(REJECT)
Rejects the request.

SCOPE
Specifies the scope of the command.

(GROUP)
Stops the specified REST services in all members of the data sharing group.

Usage notes

Affected services

The STOP RESTSVC command affects all versions of the REST services that you specify in the command.

The STOP RESTSVC command only affects the REST services that already exist when the command is issued.

Trace information for data sharing members

When this command with group scope is issued in a Db2 data sharing member, it also runs on all other active members. IFICID 090 trace records for other group members can show that the same command was issued by the SYSOPR authorization ID from the 016.TLPKN5F correlation ID, in addition to the trace records from the member where the original command was issued. See Command scope in Db2 data sharing (Db2 Data Sharing Planning and Administration).

Output

Message DSNL601I (Db2 Messages) indicates the beginning of the output of a STOP RESTSVC command. Message DSN9022I (Db2 Messages) will indicate the end of the output of the command if no failure occurred during the processing of the command. Message DSN9023I (Db2 Messages) will indicate the end of the output of the command if an abend had occurred during the processing of the command.

Examples

Example: No authority for a STOP RESTSVC command

The following command attempts to use the STOP RESTSVC command on a service that the user does not have the proper authorities for:

```
-DB2A STO RESTSVC('DB2zRESTServiceTestCollectionID.simpleSelect3')
```

The output is similar to this output:

```
DSNL601I  -DB2A STOP RESTSVC REPORT FOLLOWS-
DSNL604I  -DB2A USER HAS INSUFFICIENT AUTHORITY FOR STOP RESTSVC OF
```

```
DB2zRESTServiceTestCollectionID.simpleSelect3
DSN9022I  -DB2A DSNLJDSS 'STOP RESTSVC' NORMAL COMPLETION
```

Example: Stop all services with the *BankDemo* collection ID name

The following command successfully uses the STOP RESTSVC command on all services within the *BankDemo* collection:

```
-DB2A STOP RESTSVC('BankDemo.*')
```

The output is similar to this output:

```
DSNL601I  -DB2A STOP RESTSVC REPORT FOLLOWS-
DSNL607I  -DB2A ALL SERVICES HAVE BEEN STOPREJ FOR BankDemo.*
DSN9022I  -DB2A DSNLJDSS 'STOP RESTSVC' NORMAL COMPLETION
```

Related reference

BIND SERVICE subcommand (DSN)
The BIND SERVICE (DSN) subcommand builds an application package that represents a Db2 REST service. Db2 records the description of the service in the catalog tables and saves the prepared package in the directory.

BIND and REBIND options for packages, plans, and services
There are several options you can use for binding or rebinding packages, plans, and services. Some of the options are common for both BIND and REBIND operations.

-DISPLAY RESTSVC command (Db2)
The Db2 command DISPLAY RESTSVC displays the status of REST services that exist in Db2.

-START RESTSVC command (Db2)
The Db2 command START RESTSVC starts the definition of a REST service that is stopped. You can qualify REST service names with a collection ID name.

FREE SERVICE command (DSN)
The FREE SERVICE (DSN) subcommand deletes an application package that represents a Db2 REST service. The command also removes the corresponding entry from the catalog tables.

Chapter 99. -STOP TRACE command (Db2)

The Db2 command STOP TRACE stops tracing.

One additional option to this command and additional values for a few other options exist. This additional information is intended for service and use under the direction of IBM Support.

Abbreviation: -STO TRA

Environment

This command can be issued from a z/OS console, a DSN session, a DB2I panel (DB2 COMMANDS), an IMS or CICS terminal, or a program using the instrumentation facility interface (IFI).

Data sharing scope: Group or member

Authorization

To execute this command, you must use a privilege set of the process that includes one of the following privileges or authorities:

- TRACE privilege
- SQLADM authority
- System DBADM authority
- SYSOPR authority
- SYSCTRL authority
- SYSADM authority
- SECADM authority

Db2 commands that are issued from a logged-on z/OS console or TSO SDSF can be checked by Db2 authorization using primary and secondary authorization IDs.

Db2 commands that are issued from a logged-on z/OS console or TSO SDSF can be checked by Db2 authorization using primary and secondary authorization IDs. A logged-on z/OS user ID must be defined in RACF or a similar security server.

© Copyright IBM Corp. 1983, 2024

Syntax

```
STOP TRACE ( PERFM )
           ( ACCTG )
           ( STAT  )
           ( AUDIT )
           ( MONITOR )
           ( * )
           [ DEST( GTF , GTF , ... ) ]
           [ DEST( SMF , SMF , ... ) ]
           [ DEST( SRV , SRV , ... ) ]
           [ DEST( OPn , OPn , ... ) ]
           [ constraint block ]
           [ filtering block ]
           [ RMID ]
           [ COMMENT( string ) ]
           [ SCOPE( LOCAL ) ]
           [ SCOPE( GROUP ) ]
           ASID(x'dddd')
```

constraint block

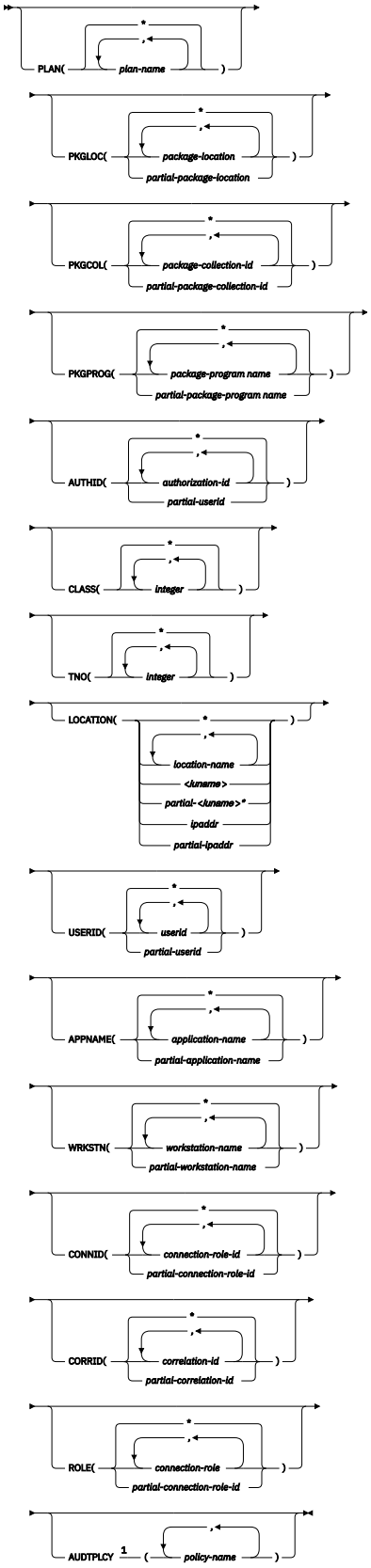

Notes:

[1] You cannot specify CLASS or IFCID with AUDTPLCY. AUDTPLCY applies to trace type AUDIT.

filtering block

```
XPLAN( plan-name | partial-plan-name )
XPKGLOC( package-location | partial-package-location )
XPKGCOL( package-collection-id | partial-package-collection-id )
XPKGPROG( package-program-name | partial-package-program-name )
XAUTHID( authorization-id | partial-authorization-id )
XLOC( location-name | partial-location-name | < luname > | partial- <luname>* | ipaddr | partial-ipaddr )
XUSERID( userid | partial-userid )
XAPPNAME( application-name | partial-application-name )
XWRKSTN( workstation-name | partial-workstation-name )
XCONNID( connection-role-id | partial-connection-role-id )
XCORRID( correlation-id | partial-correlation-id )
XROLE( connection-role | partial-connection-role-id )
```

Option descriptions

For additional descriptions of each of the following trace types, see Chapter 84, "-START TRACE command (Db2)," on page 505.

(PERFM)
Specify to stop a trace that is intended for performance analysis and tuning.

Abbreviation: P

(ACCTG)
Specify to stop an accounting trace.

Abbreviation: A

(STAT)
Specify to stop a trace that collects statistical data. The LOCATION option cannot be specified when you choose a statistics trace.

Abbreviation: S

(AUDIT)
Specify to stop a trace that collects audit data from various components of Db2.

Abbreviation: AU

(MONITOR)
Specify to stop a trace that collects monitor data.

Abbreviation: MON

(*)
Specify to stop all trace activity. See "Usage notes" on page 572 for information about using STOP TRACE (*) with traces that use monitor trace class 6.

SCOPE
Specifies the scope of the command.

(LOCAL)
Stops the trace only on the local Db2 subsystem.

(GROUP)
Stops the trace on all members of a data sharing group.

FL 509 You cannot specify SCOPE(GROUP) to stop audit traces that use tamper-proof audit policies.

ASID(x'*dddd*')
Specifies that the trace for an address space is to be stopped.

dddd is a four-byte hexadecimal address space ID (ASID).

RMID
Specifies resource manager identifier. You can specify up to 8 valid RMIDs, which are one or two digit identifiers. You cannot specify RMID for accounting or statistic traces.

COMMENT (*string*)
Gives a comment that is reproduced in the trace output record for the STOP TRACE command (except in the resident trace tables).

string is any SQL string; it must be enclosed between apostrophes if it includes a blank, comma, or special character.

DEST
Limits stopping to traces started for particular destinations. You can use more than one value, but do not use the same value twice. If you do not specify a value for DEST, Db2 does not use destination to limit which traces to stop.

Abbreviation: D

Possible values and their meanings are:

Value
Trace destination

GTF
The generalized trace facility

SMF
The System Management Facility

SRV
An exit to a user-written routine

OP *n*
A specific destination.

n can be an integer from 1 to 8.

See Chapter 84, "-START TRACE command (Db2)," on page 505 for a list of allowable destinations for each trace type.

CLASS(*integer* , ...)
Limits stopping to traces started for particular classes. For descriptions of the allowable classes, see Chapter 84, "-START TRACE command (Db2)," on page 505. You cannot specify a class if you did not specify a trace type.

Abbreviation: C

The **default** is `CLASS( * )` , which does not limit the command.

TNO(*integer* , ...)
Limits stopping to particular traces, identified by their trace numbers (1 to 32, 01 to 09). You can use up to eight trace numbers. If you use more than one number, you can use only one value each for PLAN, AUTHID, and LOCATION.

The **default** is `TNO( * )` , which does not limit the command.

PLAN(*plan-name* , ...) or XPLAN(*plan-name* , ...)
Introduces a list of specific plans for which trace information is gathered. Use PLAN to constrain the trace to the specified plans or XPLAN to exclude the specified plans. You cannot use this option for a STAT trace.

The **default** is `PLAN( * )` .

(*)
Stops a trace for all plans.

plan-name
The name of an application plan. You can use up to eight names. If you use more than one name, you can use only one value for AUTHID and LOCATION.

PKGLOC or XPKGLOC
Specifies the location name where the package is bound. Use PKGLOC to constrain the trace to the specified locations or XPKGLOC to exclude the specified locations.

PKGCOL or XPKGCOL
Specifies the package collection name. Use PKGCOL to constrain the trace to the specified collections or XPKGCOL to exclude the specified collections.

PKGPROG or XPKGPROG
Specifies the DBRM or program name. Use PKGPROG to constrain the trace to the specified programs or XPKGPROG to exclude the specified programs.

AUTHID(*authorization-id* , ...) or XAUTHID(*authorization-id* , ...)
Introduces a list of specific authorization IDs for which trace information is gathered. Use AUTHID to constrain the trace to the specified authorization IDs or XAUTHID to exclude the specified authorization IDs. The authorization IDs specified must be the primary authorization IDs. You cannot use this option for a STAT trace.

The **default** is `AUTHID( * )`.

(*)
Stops a trace for all authorization IDs.

authorization-id
Specifies an authorization ID. You can use up to eight identifiers. If you use more than one identifier, you can use only one value for PLAN and LOCATION.

LOCATION(*location-name* , ...) or XLOC(*location-name* , ...)
Specifies a list of location names for which trace information is gathered. Use LOCATION to constrain the trace to the specified locations or XLOC to exclude the specified locations. The use of the LOCATION or XLOC option precludes tracing threads that have no distributed data relationship.

location-name
Identifies the Db2 subsystems whose distributed threads you want to trace. Activates the Db2 trace for the remote TCP/IP or SNA location that you specify by *location-name*.

You can specify up to eight locations. You can specify only one location if you use more than one plan name or authorization ID.

<luname>
Activates the Db2 trace for the remote clients that are connected to DDF through the remote SNA LU name that you specified in *luname*.

ipaddr
Activates the Db2 trace for the remote clients that are connected to DDF through the remote TCP/IP host.*ipaddr* is the IP address.

(*)
Indicates that you want to stop trace events that occur under distributed threads regardless of which location they are connected to. Specifying the local location name is equivalent to specifying LOCATION(*).

Clients other than Db2 for z/OS: Db2 for z/OS does not receive a location name from clients that are not Db2 for z/OS subsystems. To stop a trace for a client that is not a Db2 for z/OS subsystem, enter its LUNAME or IP address. Enclose the LUNAME by the less-than (<) and greater-than (>) symbols. Enter the IP address in the form *nnn.nnn.nnn.nnn*. For example, to stop a trace for a client with the LUNAME of LULA, enter the following command:

```
-STOP TRACE (*) LOCATION (<LULA>)
```

To stop a trace for a client with the IP address of 123.34.101.98, enter the following command:

```
-STOP TRACE (*) LOCATION (::FFFF:123.34.101.98)
```

USERID or XUSERID
Specifies the user ID. Use USERID to constrain the trace to the specified user IDs or XUSERID to exclude the specified user IDs. You can specify multiple values and wildcard values as described in Usage notes.

USERID and XUSERID can be up to 16 characters.

APPNAME or XAPPNAME
Specifies the application name. Use APPNAME to constrain the trace to the specified applications or XAPPNAME to exclude the specified applications. You can specify multiple values and wildcard values as described in Usage notes.

APPNAME and XAPPNAME can be up to 32 characters.

WRKSTN or XWRKSTN
Specifies the workstation name. Use WRKSTN to constrain the trace to the specified workstations or XWRKSTN to exclude the specified workstations. You can specify multiple values and wildcard values as described in Usage notes.

WRKSTN and XWRKSTN can be up to 18 characters.

CONNID or XCONNID
Specifies the connection ID. Use CONNID to constrain the trace to the specified connections or XCONNID to exclude the specified connections.

CORRID or XCORRID
Specifies the correlation ID. Use CORRID to constrain the trace to the specified correlation IDs or XCORRID to exclude the specified correlation IDs.

ROLE or XROLE
Specifies the connection roles. Use ROLE to constrain the trace to the specified roles or XROLE to exclude the specified roles.

AUDTPLCY
Stops the IFCIDs that correspond to the categories specified in the listed audit policies. You can specify up to eight audit policy names. AUDTPLCY applies to trace type AUDIT. You cannot specify CLASS or IFCID with AUDTPLCY.

Usage notes

Stopping specific traces

Each option that you use, except TNO, limits the effect of the command to active traces that were started using the same option, either explicitly or by default, with exactly the same parameter values. For example, the following command stops only the active traces that were started using the options PERFM *and* CLASS (1,2):

```
-STOP TRACE (PERFM) CLASS (1,2)
```

This command does *not* stop, for example, any trace started using CLASS(1).

You must specify a trace type or an asterisk. For example, the following command stops all active traces:

```
-STOP TRACE (*)
```

Traces that use monitor trace class 6

When stopping trace classes, a special circumstance occurs if monitor trace class 6 is active. Monitor trace class 6 enables and disables data propagation. To avoid accidentally stopping this trace class, the commands STOP TRACE(*) and STOP TRACE(MON) CLASS(*) fail if monitor trace class 6 is active.

To stop monitor trace class 6, you must explicitly specify it as one of the arguments of the CLASS option of the STOP TRACE command, including any other monitor trace classes that were started with monitor trace class 6. For example, if monitor trace class 6 was started with the command -START TRACE(MON) CLASS(1,3,6), the following command stops it:

```
-STOP TRACE(MON) CLASS(1,3,6)
```

In the case where monitor trace class 6 was started with the command -START TRACE(MON) CLASS(*), you must explicitly specify all 32 monitor trace classes to have monitor trace class 6 stopped:

```
-STOP TRACE(MON) CLASS(1,2,3,4,5,6,...32)
```

However, if monitor trace class 6 is not active the STOP TRACE(*) command stops all active traces.

Audit traces that use tamper-proof audit policies

FL 509 If you specify the STOP TRACE(*) command with the SCOPE(GROUP) option to stop an audit trace that uses a tamper-proof audit policy, the tamper-proof audit policy is not stopped for the data sharing group and message DSNW122I is issued. You cannot use SCOPE(GROUP) to stop tamper-proof audit policies.

Recommendation: FL 509 Stop all tamper-proof audit policies in one trace number group by using the STOP TRACE command. Doing so helps avoid the possibility of mismatching trace numbers among data sharing members if the SCOPE(GROUP) option is used to stop a tamper-proof audit policy.

To stop a tamper-proof audit policy on all members of a data sharing group, issue the STOP TRACE command on each member of the data sharing group.

Do not stop traces that were started by a IFI/IFC program

Before you stop an active trace, ensure that an IFI application program or the IFC Selective Dump utility (DSN1SDMP) did not start the trace. If you stop a trace started by DSN1SDMP, the DSN1SDMP utility abnormally terminates.

Stopping a trace for specific threads using the * wildcard

You can use the wildcard suffix, "*" to stop traces for certain threads. For example, if you specify -STOP TRACE PLAN (A,B,C*), Db2 will stop traces for threads "A", "B" and all threads starting with "C".

Stopping a trace for specific threads using the positional, (_) wildcard

You can use the positional wildcard, which is represented by the, "_" character, to stop traces for threads with a specific character in the middle, or when you want to stop the trace for threads of a specific length. For example, if you specify -STOP TRACE PLAN (A_C), all traces will be stopped for threads that are three characters that have "A" as the first character, and "C" as the third. If you want to stop tracing threads for plan "A_C", issue -STOP TRACE PLAN (A/_C). The "/" before the "_" tells Db2 to stop the trace for plans with an underscore in the name, rather than treating the underscore as a wildcard. The same logic applies if you are trying to stop a trace for a thread whose plan includes a "/" or "*" character. Because the character "/" is an escape character, if you are trying to stop the trace for a thread whose plan has a "/" character in it, you can specify, for example, -STOP TRACE PLAN (A//C) to stop the trace for threads for plan "A/C". You can also specify -STOP TRACE PLAN (A/*C) to stop the trace for threads for plan name "A*C".

Stopping a trace for multiple threads at once using wildcards

You also have the option of stopping the trace of multiple threads based on multiple trace qualifications. For example, you can specify -STOP TRACE PLAN (A*, B*, C*) to simultaneously stop the trace for ALL threads for plans that start with "A", "B", and "C". The wildcard character, "*" stops the trace for all threads. You can specify more complex combinations such as -STOP TRACE PLAN (A_B*, C*, AND C/_D*), which will stop the trace for all threads that:

- Begin with "A", have a one character wild card as the second character in the thread, have a "B" as the third character in the thread, and end with any type or number of characters (**A**D**B**IOP, **A**O**B**TYJDP,)
- Begin with "C", and end with any combination of characters (**C**DE, **C**GHKO)
- Begin with "C_D" and end with any type of character combination (**C_D**EFGH, **C_D**LMNOP)

Traces for all of the possible thread combinations listed above will be stopped with the command above.

You have the ability to filter multiple threads at the same time, setting specific criteria for stopping the trace. For example, you can specify -STOP TRACE PLAN (A) USERID (B). This will stop the trace for threads where the plan is A, and the user ID is B. When stopping the trace for threads, you can only specify more than one thread criteria for one filter for each -STOP TRACE command. For example, you can specify -STOP TRACE PLAN (A,B) USERID (B) WRKSTN (E), but you cannot specify -STOP TRACE PLAN (A, B) USER ID (A, B) WRKSTN (E) because, in this example, two of the filter qualifications have two elements defined, and Db2 only allows for one attribute to have more than one trace element to be defined for a trace.

Filtering threads using exclude functionality

When you specify an "X" with any constraint keyword, such as "XPLAN", you are using the exclude functionality for the –STOP TRACE command. You have the option of excluding specific types of threads when you are stopping traces. You can use the "X" character to exclude specific combinations of characters when you are stopping a trace. For example, you can specify -STOP TRACE XPLAN(A), to stop the trace for all threads **except** "A". In this instance B, BCD, BCDE, or CD could possibly be returned.

You also have the option of excluding multiple types of threads from your trace. For example, you can specify -STOP TRACE XPLAN (A*, B*) to stop the trace for all threads **except** those starting with "A", with any combination of characters following "A", and all those characters starting with "B", with any combination of characters following "B". Note: Specifying XPLAN (*) excludes all threads from your search, and is not allowed. You also cannot use the wildcard in the middle of a STOP TRACE command with exclude functionality, such as -STOP TRACE XPLAN (A*C). You can, however, specify -STOP TRACE XPLAN (A_ _ C *), which will stop the trace for all threads **except** those starting with "A", a variety of **two** characters next, a "C" in the fourth space, and a variety of characters at the end. The wildcard symbol cannot be placed in the middle of trace criteria.

You have the ability to stop two traces at once. For example, you can specify -STOP TRACE XPLAN (A, B, C) USERID (D). This tells Db2 to stop tracing all threads for plans **except** "A", "B", or "C", only where the user ID is "D".

Combining trace qualifiers

You can customize the threads for which you stop a trace by specifying some threads, and excluding other threads. For example, you can specify -STOP TRACE USERID (A,B) XPLAN (C). This criterion only stops the trace for threads where the user ID is equal to "A" or "B", and the plan is **not** equal to "C". In this example, the trace for a thread where the user ID is "A" and the plan is equal to "D" would be stopped, but a trace for a thread where the user ID is "A" and plan is "C" would not be stopped.

You can introduce wildcards into your STOP TRACE commands to further customize the traces that are to be stopped. For example, you can specify -STOP TRACE PLAN (C*) USER ID (Z, X) XPLAN (C, D, E). In this example, for the trace to be stopped, the plan must begin with C, the user ID must be equal to Z or to X, and the plan cannot be C, D, or E. Therefore, a trace for a plan of CB, with a user ID of Z would be stopped, but a trace for a plan C with a user ID of X would not be stopped because the command specifies not to stop the trace for threads where the plan is "C", without additional characters in the thread.

Trace information for commands issued with group scope

If this command is issued with options that specify group scope in a Db2 data sharing member, it also runs on all other active members. IFICID 090 trace records for other group members can show that the same command was issued by the SYSOPR authorization ID from the 016.TLPKN5F correlation ID, in addition to the trace records from the member where the original command was issued. See Command scope in Db2 data sharing (Db2 Data Sharing Planning and Administration).

Examples

Example 1: Stop all traces that have the generalized trace facility as their only destination.

```
-STOP TRACE (*) DEST (GTF)
```

Example 2: Stop an accounting trace of all threads between the local and USIBMSTODB21 Db2 subsystems for plan DSN8BC81. Include a comment.

```
-STOP TRACE (ACCTG)
  PLAN (DSN8BC81)
  LOCATION (USIBMSTODB21)
  COMMENT('ACCTG TRACE FOR DSN8BC81')
```

Example 3: Stop trace number 4.

```
-STOP TRACE (P) TNO(4)
```

Example 4: Stop all active traces of any type for USIBMSTODB22.

```
-STOP TRACE (*) LOCATION (USIBMSTODB22)
```

Example 5: Stop all performance traces.

```
-STOP TRACE=P
```

Example 6: Stop all monitor tracing.

```
-STOP TRACE(MON)
```

Example 7: Stop all monitor tracing in a data sharing group.

```
-STOP TRACE(MON) SCOPE(GROUP)
```

Example 8: Stop all audit tracing that uses audit policy AUDITADMIN.

```
-STO TRACE(AUDIT) DEST(GTF) AUDTPLCY(AUDITADMIN)
```

Related reference

-DISPLAY TRACE command (Db2)
The Db2 command DISPLAY TRACE displays a list of active traces.

-MODIFY TRACE command (Db2)
The Db2 command MODIFY TRACE changes the IFCIDs (trace events) associated with a particular active trace.

-START TRACE command (Db2)
The Db2 command START TRACE starts Db2 traces.

Chapter 100. -TERM UTILITY command (Db2)

The Db2 command TERM UTILITY terminates execution of a Db2 utility job step and releases all resources associated with the step.

When executing, a utility does not terminate until it checks to see that the TERM UTILITY command was issued. Active utilities perform this check periodically. If the utility is stopped, all its resources are released by the TERM UTILITY command. An active utility can be terminated only from the Db2 on which it is running. A stopped utility can be terminated from any active member of the data sharing group.

Abbreviation: -TER UTIL

Environment

This command can be issued from a z/OS console, a DSN session, DB2I panels DB2 COMMANDS and Db2 UTILITIES, an IMS or CICS terminal, or a program using the instrumentation facility interface (IFI).

Data sharing scope: Group or member

The utility is implicitly of group scope when the utility is stopped.

Authorization

To execute this command, you must use the primary or some secondary authorization ID of the process that originally submitted the utility job, or you must use a privilege set of the process that includes one of the following authorities:

- DBMAINT authority
- DBCTRL authority
- DBADM authority
- SYSOPR authority
- System DBADM authority
- DATAACCESS authority
- SYSCTRL authority
- SYSADM authority

For utilities that run on objects in implicitly created databases, the database privilege or authority can be held on the implicitly created database or on DSNDB04. Ownership of the table spaces or index spaces on which the utility operates is also sufficient to terminate the utility. This means that the owner can display information about an implicitly created table space or index space if the command explicitly specifies that table space or index space name.

The utilities DIAGNOSE, REPORT, and STOSPACE can be terminated only by the job submitter or by a holder of SYSOPR, SYSCTRL, or SYSADM authority.

Db2 commands that are issued from a logged-on z/OS console or TSO SDSF can be checked by Db2 authorization using primary and secondary authorization IDs. A logged-on z/OS user ID must be defined in RACF or a similar security server.

For users with DBMAINT, DBCTRL, or DBADM authority, the command takes effect only when Db2 can determine that the user has sufficient authority over each object that the utility job accesses.

Database DSNDB06 contains the table spaces and index spaces that are required to check authorization. If a table or index space that is required for authorization checking is affected by a utility that you need to terminate, installation SYSADM authority is required to terminate that utility.

© Copyright IBM Corp. 1983, 2024

Syntax

```
►► TERM UTILITY ── ( ┬─ utility-id ─────────┬ ) ►◄
                     ├─ partial-utility-id* ─┤
                     └─ * ───────────────────┘
```

Option descriptions

One of the following parameters must be specified.

(*utility-id*)
Is the utility identifier, or the UID parameter used when creating the utility job step.

If *utility-id* was created by the DSNU CLIST by default, it has the form *tso-userid.control-file-name*.

If *utility-id* was created by default by the EXEC statement invoking DSNUTILB, then the token has the form *userid.jobname*.

If *utility-id* contains lowercase letters or special characters, it must be enclosed in single quotation marks (').

(*partial-utility-id)**
Terminates every utility job that begins with *partial-utility-id* . For example, TERM UTILITY(ABCD*) terminates every utility job step whose utility identifier begins with the letters ABCD. If you have a two-part utility ID, such as ABCD.EFGH, TERM UTILITY(ABCD*) also terminates that utility.

(*)
Terminates every utility job step known to Db2 for which you are authorized.

Usage notes

Restarting utilities
A terminated utility job step cannot be restarted. You must resubmit the step as a new utility job.

What happens to particular utilities
In some cases, terminating a utility job can leave work in an undesirable state, requiring special processing before the job can be resubmitted. The following list describes the effects of TERM UTILITY on jobs for each of the utilities:

CATMAINT
Places indexes in REBUILD-pending status.

CHECK DATA
Table spaces remain in CHECK-pending status.

CHECK INDEX
None.

CHECK LOB
Places LOB table spaces and indexes in the utility read-only (UTRO) state.

COPY
Inserts "T" record in SYSIBM.SYSCOPY. When you run COPY, COPY does not allow an incremental image copy if the "T" record exists.

DIAGNOSE
None.

LOAD
Termination of LOAD

MERGECOPY
None.

MODIFY RECOVERY
If MODIFY RECOVERY, in the DELETEDS phase, detects that the TERM command has been issued, MODIFY RECOVERY stops deleting image copy data sets and proceeds to the UTILTERM phase. If the TERM command was issued on a MODIFY RECOVERY utility that abended in the DELETEDS phase, the TERM command terminates the MODIFY RECOVERY utility and the image copy data sets are not be deleted.

MODIFY STATISTICS
None.

QUIESCE
None.

REBUILD INDEX
Places the object that is being rebuilt in REBUILD-pending status.

RECOVER
Places the object that is being recovered in RECOVER-pending status.

REORG INDEX
Termination of REORG INDEX

REORG TABLESPACE
Termination of REORG TABLESPACE

REPAIR
None.

REPORT
None.

RUNSTATS
None.

STOSPACE
None.

UNLOAD
The output data set remains incomplete until you restart the utility job or delete the data set.

Trace information for commands issued with group scope
If this command is issued with options that specify group scope in a Db2 data sharing member, it also runs on all other active members. IFICID 090 trace records for other group members can show that the same command was issued by the SYSOPR authorization ID from the 016.TLPKN5F correlation ID, in addition to the trace records from the member where the original command was issued. See Command scope in Db2 data sharing (Db2 Data Sharing Planning and Administration).

Examples

Example 1: Terminate all utility jobs for which you are authorized.

```
-TERM UTILITY (*)
```

Example 2: Terminate all utility jobs whose utility ID begins with SMITH.

```
-TERM UTILITY
  (SMITH*)
```

Related tasks
Terminating an online utility (Db2 Utilities)

Chapter 101. TRACE CT command (z/OS IRLM)

The z/OS command TRACE CT starts, stops, or modifies a diagnostic trace for the internal resource lock manager (IRLM) of Db2.

IRLM does not support all the options available on the TRACE command.

Environment

This command can be issued only from a z/OS console.

Data sharing scope: Member

Authorization

This command requires an appropriate level of operating system authority.

The syntax diagram and option descriptions for this command are purposely incomplete.

Syntax

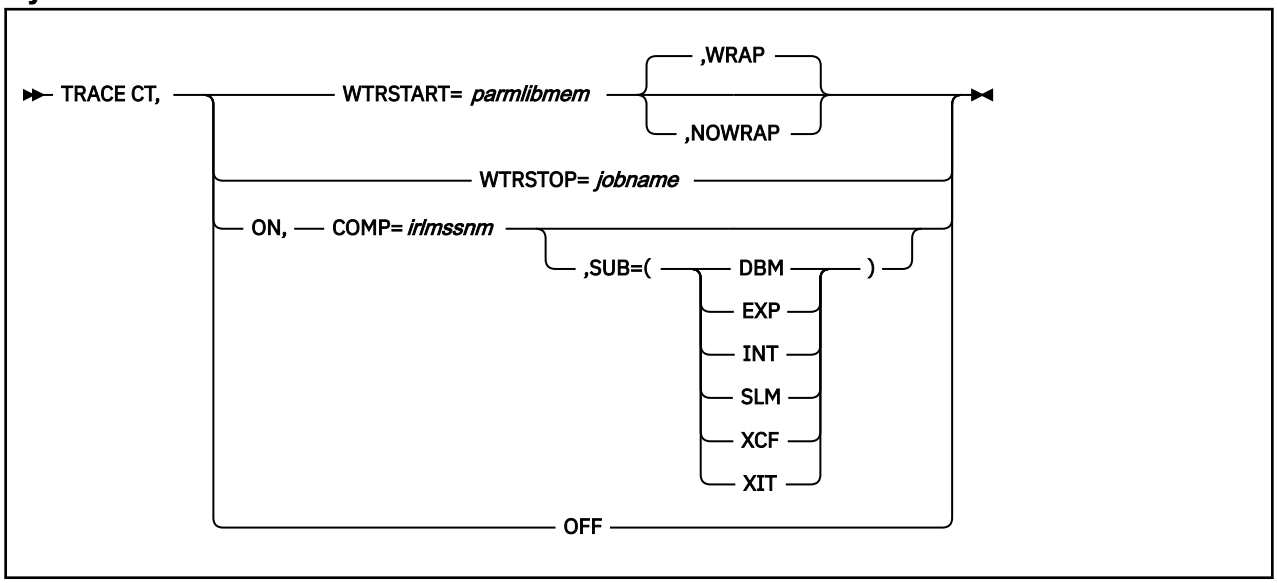

Option descriptions

CT

Specifies the component trace. (Do not use other trace options available on the z/OS TRACE command).

WTRSTART= *parmlibmem*

Identifies the member that contains source JCL. That JCL executes the CTRACE writer and defines the data set to which it writes the trace buffers. This member can be a procedure cataloged in SYS1.PROCLIB or a job.

WRAP

Specifies that when the system reaches the end of the group of data sets, it writes over the oldest data at the beginning of the first data set in the group. The system uses only the primary extents of the data sets.

NOWRAP

Specifies that the system stops writing to the data sets when they are all full. The system uses the primary and secondary extents of the data sets.

© Copyright IBM Corp. 1983, 2024

WTRSTOP= *jobname*
Stops the CTRACE writer for a trace that is running. The system also closes the data sets that the writer used.

jobname identifies the trace, either by:

- Member name, if the source JCL is a procedure
- Job name, if that appears on a JOB statement in the source JCL

ON
Turns on the trace.

COMP= *irlmssnm*
Gives the IRLM subsystem name.

SUB= *subname*
Specifies the type of sublevel trace. Traces INT, EXP, and XIT are ON by default. You cannot turn off traces INT and EXP. If you do not specify a subname on the TRACE command, the trace is performed on all subnames that you control. Specifying one subname restricts the traces to that trace plus the EXP and INT traces.

Use:
To trace:

DBM
Interactions with the identified DBMS

EXP
Any exception condition

INT
Member and group events outside normal locking activity

SLM
Interactions with the z/OS locking component

XCF
All interactions with z/OS cross-system coupling services

XIT
Only asynchronous interactions with the z/OS locking component

OFF
Turns off the trace. If IRLM is connected to a CTRACE writer for the component trace, the system disconnects it.

Usage notes

Include the IRLM load module in the z/OS link list: This command uses z/OS component trace services. Include the IRLM load module DXRRL183, which contains a routine for stopping and starting, in the z/OS link list.

Displaying a trace: To display a trace, use the z/OS DISPLAY command:

```
D TRACE,COMP=IRLM
```

The z/OS DISPLAY TRACE command output is incorrect for IRLM unless you use TRACE CT commands to inform z/OS of the TRACE status. IRLM initializes it's own traces and writes them in CTRACE format, but IRLM has no interface to z/OS to inform it of the status. If you want to know the true status of the traces without using TRACE CT commands to inform z/OS, use the MODIFY *irlmproc*,STATUS,TRACE command.

Monitoring a trace: To monitor a trace, use the z/OS MODIFY *irlmproc*,STATUS,TRACE command.

Setting the number of trace buffers: To set the number of trace buffers used by traces, use the z/OS MODIFY *irlmproc*,SET command.

Sample procedure for the CTRACE writer: This procedure identifies the data set to which the next sample procedure writes data. The external trace writer must be executed at the same or higher dispatch priority as IRLM. This allows the I/O to keep up with the filling of the trace buffers.

```
//CTWTR    PROC
//         EXEC PGM=ITTTRCWR
//TRCOUT01 DD   DSNAME=SYS1.WTR1,DISP=OLD
//TRCOUT02 DD   DSNAME=SYS1.WTR2,DISP=OLD
```

Sample procedure to start and stop a DBM trace to the CTRACE writer: These commands start and stop an IRLM DBM trace. The trace data is written to an external writer data set that is identified in procedure CTWTR.

```
TRACE CT,WTRSTART=CTWTR
TRACE CT,ON,COMP=IRLM,SUB=(DBM)
⋮
  (z/OS asks for a reply)
⋮
R 15,WTR=CTWTR,END
TRACE CT,OFF,COMP=IRLM,SUB=(DBM)
⋮
  (Wait to make sure trace buffers are externalized.)
TRACE CT,WTRSTOP=CTWTR
```

Sample procedure to start and stop traces in wrap-around mode: Traces captured in this procedure are saved in a limited number of buffers that are provided by IRLM. Each buffer is reused when the previous buffer is filled. To start the trace in this wrap-around mode, enter the following commands:

```
TRACE CT,ON,COMP=IRLM
⋮
  (z/OS asks for a reply)
⋮
R 15,END
⋮
TRACE CT,OFF,COMP=IRLM
```

Impact of setting TRACE CT ON: Each active subname type requires up to 0.7 MB of ECSA. Because IRLM initializes its own traces when it starts, the DISPLAY TRACE command shows that all traces are off. After you issue the TRACE ON command, the reports are accurate except for the two subname types, INT and EXT, which cannot be turned off.

Part 2. The Db2 command line processor

The Db2 command line processor is a program that runs under z/OS UNIX System Services. You can use the Db2 command line processor to execute SQL statements, bind DBRMs that are stored in HFS files into packages, call stored procedures, and perform XML schema repository operations.

The Db2 command line processor is an alternative to using SPUFI or DSNTEP2 to execute SQL statements. You can use it in interactive or batch mode:

- In *interactive mode*, you request a single operation, and the Db2 command line processor executes that operation and returns the result.
- In *batch mode*, you pass a file that contains all of the operations that you want to execute to the Db2 command line processor.

Related tasks

Binding a DBRM that is in an HFS file to a package or collection (Db2 Application programming and SQL)

Setting up the Db2 command line processor (Db2 Installation and Migration)

Related reference

Statements (Db2 SQL)

© Copyright IBM Corp. 1983, 2024

Chapter 102. Start syntax for the Db2 command line processor

You start the Db2 command line processor by running the Java program com.ibm.db2.clp.db2 from z/OS UNIX System Services.

```
>>- java ------------------------------------------------------------>
         '- -Ddb2.jcc.propertiesFile= java-properties-file -'

>------------------------------------- com.ibm.db2.clp.db2 ------------>
   '- -Dfile.encoding= file-encoding -'                   '- option-flags -'
>-<
```

java com.ibm.db2.clp.db2
Starts the Db2 command line processor.

To simplify starting the Db2 command line processor, you can define an alias for this command, and then start the command line process by specifying the alias. For example:

```
alias db2="java com.ibm.db2.clp.db2"
db2
```

-Ddb2.jcc.propertiesFile=*java-properties-file*
The Db2 command line processor runs under the IBM Data Server Driver for JDBC and SQLJ. `-Ddb2.jcc.propertiesFile=`*`java-properties-file`* specifies the name of a file that contains configuration properties for the IBM Data Server Driver for JDBC and SQLJ. Specify this option only if your system administrator tells you to do so.

-Dfile.encoding=*file-encoding*
Specifies the file encoding that is used for a Db2 command line processor input file. For example, if the data in the input file has UTF-8 encoding, specify `-Dfile.encoding=UTF-8`.

option-flags
Specifies one or more options for the Db2 command line processor. When you specify more than one option, separate the option flags with spaces. To turn an option on, precede the option flag with a minus (-) sign. To turn the option off, precede the option flag with a plus (+) sign.

The following table lists the options and their default values, if the defaults have not been set in a Db2 command line processor properties file.

Table 31. Command line processor option flags

Option flag	Option description	Default setting
a	Display the contents of the SQLCA after SQL statement execution.	OFF
c	Automatically commit SQL statements.	ON
f *file-name*	Read command input from the file specified by *file-name*.	OFF
o	Display data and messages on the standard output device.	ON

© Copyright IBM Corp. 1983, 2024

Table 31. Command line processor option flags (continued)		
Option flag	**Option description**	**Default setting**
`s`	Stop the Db2 command line processor and exit to the operating system if an error occurs during execution of a statement or command.	OFF
`t`	Use the semicolon (;) as the statement termination character. If this option is not set, the command line processor handles each line as a complete statement unless the line ends with a space followed by a backslash(\).	OFF
`td`*x*	Use *x* as the statement termination character.	OFF
`u` *user-id/credential*	Use the specified values when making a connection from the file specified in option flag f. ***user-id*** The user ID for the connection. ***credential*** The password or RACF PassTicket for the connection	OFF
`v`	Echo the command text to the standard output device.	OFF
`x`	Return data without any headers.	OFF
`z` *file-name*	Store output data and messages in the file specified by *file-name*.	OFF

The values of any options that you do not specify are determined by the values in the properties file that is specified by the CLPPROPERTIESFILE environment variable.

Examples

Example: Starting the Db2 command line processor with defaults

Suppose that no alias has been set for the Db2 command line processor name. Use this command to start the command line processor with the default values:

```
java com.ibm.db2.clp.db2
```

Example: Starting the Db2 command line processor with options

Suppose that the alias db2 has been set for the Db2 command line processorname. You want to start the command line processor with these options, which are not the default options:

- After each SQL statement is executed, the contents of the SQLCA are displayed.
- COMMIT is not executed automatically after each SQL statement.
- The statement termination character is that pound sign (#).

Use this command:

```
db2 -a +c -td#
```

Example: Starting the Db2 command line processor in batch mode

Suppose that the alias db2 has been set for the Db2 command line processor name. You want to run the command line processor with these options:

- The Db2 command line processor runs in batch mode. The `db2commands.clp` file contains the commands.
- The commands are echoed to the display.

Use this command:

```
db2 -f db2commands.clp -v
```

Example: Specifying a user ID and password or RACF PassTicket to run an SQL file

Suppose that you want to use the Db2 command line processor to connect to a server and your system administrator provides the following connection URL for the server: `syszos1.abc.com:5021/ABCLOC1`

You can create a file named `script.sql` that contains the following statement:

```
CONNECT TO syszos1.abc.com:5021/ABCLOC1
```

Also suppose that the alias db2 has been set for the Db2 command line processor name, and your user ID is myid01. If your password is mypw01, you can use the following command to connect to the server:

```
db2 -f script.sql -u myid01/mypw01
```

If your credential is the RACF PassTicket phrase TMOK73SJ, you can use the following command to connect to the server:

```
db2 -f script.sql -u myid01/TMOK73SJ
```

Related concepts

Customization of IBM Data Server Driver for JDBC and SQLJ configuration properties (Db2 Application Programming for Java)

Related reference

IBM Data Server Driver for JDBC and SQLJ configuration properties (Db2 Application Programming for Java)

Chapter 103. Properties file for the Db2 command line processor

You can use a properties file to set your own defaults for Db2 command line processor properties.

The name of the Db2 command line processor properties file is determined by the setting of the CLPPROPERTIESFILE environment variable. A sample command line processor properties file named `clp.properties` is in directory `/usr/lpp/db2/db2c10/base/samples`.

The command line properties file is a text file that contains properties in *keyword=value* format. When you invoke the command line processor, the command line processor loads the properties file. Any changes to the properties file while the command line processor session is active do not take effect during the session. However, you can temporarily change option values that have a value of OFF or ON during the session with the UPDATE COMMAND OPTIONS command.

The following table lists the keywords and values that you can put in the command line processor properties file.

The following table lists the options and their default values, if the defaults have not been set by a command line processor properties file. If you specify a blank value for a property, the command line processor uses the default value.

Table 32. Command line processor option flags

Keyword name	Option description	Possible values (first value is the default)
DisplaySQLCA	Display the contents of the SQLCA after SQL statement execution.	OFF ON blank
AutoCommit	Automatically commit SQL statements.	ON OFF blank
InputFilename	Read command input from the file specified by *file-name*.	*file-name* blank
DisplayOutput	Display data and messages on the standard output device.	ON OFF blank
StopOnError	Stop the command line processor and exit to the operating system if an error occurs during execution of a statement or command.	OFF ON blank

© Copyright IBM Corp. 1983, 2024

Table 32. Command line processor option flags (continued)		
Keyword name	**Option description**	**Possible values (first value is the default)**
TerminationChar	The statement or command termination character: **OFF or blank** The command line processor handles each line as a complete statement unless the line ends with a space followed by a backslash(\). **ON** Use the semicolon (;) as the statement termination character. ***single-character*** Use that character as the termination character	OFF ON *single-character* blank
Echo	Echo the command text to the standard output device.	OFF ON blank
StripHeaders	Return data without any headers.	OFF ON blank
OutputFilename	Store output data and messages in the file specified by *file-name*.	OFF *file-name* blank
IsolationLevel	The SQL statement isolation level	CS|RR|RS|UR CS RR RS UR blank
MaxLinesFromSelect	The maximum number of rows that are returned from an SQL SELECT statement	ALL *integer* blank
MaxColumnWidth	The maximum number of characters in any column that is displayed after execution of: • An SQL SELECT statement • An SQL CALL statement that returns a result set • A command line processor CATALOG command	500 *integer* blank

Table 32. Command line processor option flags (continued)		
Keyword name	**Option description**	**Possible values (first value is the default)**
connection-alias	A string that represents the information that is required in a CONNECT command. The string consists of a connection URL, user ID, and password, separated by commas. The connection URL, user ID and password are defined in Chapter 116, "CONNECT (Db2 command line processor)," on page 623. Users can specify *connection-alias* in a CONNECT command to simplify the connection process.	None

Related reference

Start syntax for the Db2 command line processor
You start the Db2 command line processor by running the Java program com.ibm.db2.clp.db2 from z/OS UNIX System Services.

Chapter 104. Help for the Db2 command line processor

The command line processor help command provides information about command line processor commands.

```
►► ? ──┬──────────────┬──►◄
       │ command      │
       └ OPTIONS      ┘
```

?
Indicates that this is a request for help. If the question mark (?) is specified by itself, a list of command line processor commands is displayed.

command
Indicates that this is a request for help for a specific command line processor command. You can specify one or more keywords in the command name. If more than one command begins with the same keyword, the command line processor displays help for all commands that begin with that keyword.

OPTIONS
Indicates that this is a request for a list of command line processor start-up options and their default settings.

Examples

Example: Displaying a list of command line processor commands
To see a list of all command line processor commands, run this command:

```
?
```

Example: Displaying help for all LIST commands
To see help for all commands that begin with the keyword LIST, run this command:

```
? LIST
```

Example: Displaying help for a specific LIST command
To see help for the LIST TABLES command, run this command:

```
? LIST TABLES
```

© Copyright IBM Corp. 1983, 2024

Chapter 105. Running the Db2 command line processor

If you use z/OS UNIX System Services, you can run the Db2 command line processor.

Before you begin

Before you can use the Db2 command line processor, your z/OS UNIX System Services session needs to be set up to locate the Db2 command line processor code and the properties file that contains Db2 command line processor start-up options. See Setting up the Db2 command line processor (Db2 Installation and Migration) for details.

About this task

To run the Db2 command line processor:

Procedure

1. Start the Db2 command line processor.

   See Chapter 102, “Start syntax for the Db2 command line processor,” on page 587.
2. Connect to a Db2 server using the CONNECT command.

   You can disconnect from one server and connect to another server during the command line processor session by using the DISCONNECT command and another CONNECT command.
3. Run Db2 command line processor commands.

   The Db2 command line processor lets you perform the following types of tasks:

Task	Command
Perform COMMIT, ROLLBACK, change isolation level, or DESCRIBE operations	COMMIT ROLLBACK CHANGE ISOLATION DESCRIBE CALL DESCRIBE TABLE
Execute other SQL statements, including CALL	Chapter 127, “SQL statements (Db2 command line processor),” on page 645
Perform XML schema repository operations	REGISTER XMLSCHEMA ADD XMLSCHEMA COMPLETE XMLSCHEMA REMOVE XMLSCHEMA
Bind packages	BIND
List the tables on the Db2 server	LIST TABLES
View or modify command line processor options	LIST COMMAND OPTIONS UPDATE COMMAND OPTIONS

© Copyright IBM Corp. 1983, 2024

Task	Command
View or modify the format of the command line processor output	DISPLAY RESULT SETTINGS CHANGE MAXCOLUMWIDTH CHANGE MAXLINESFROMSELECT
Add explanatory information to the output	ECHO
Run z/OS UNIX System Services commands	Chapter 129, “z/OS UNIX System Services (Db2 command line processor),” on page 649
Display command line processor help	Chapter 104, “Help for the Db2 command line processor,” on page 595

4. Stop the Db2 command line processor by running the TERMINATE command.

Related tasks

Setting up the Db2 command line processor (Db2 Installation and Migration)

Chapter 106. Tutorial: Using the Db2 command line processor

You can interactively query and modify Db2 data, call stored procedures, and issue z/OS UNIX System Services commands through the Db2 command line processor. This lesson demonstrates how to perform those tasks.

Before you begin

Before you start this tutorial, make sure that your system administrator has customized your environment appropriately:

- Your z/OS UNIX System Services .profile file needs to be set up so that you can use the Db2 command line processor.
- The command line processor properties file needs to include the alias MYALIAS01 for your connection information. A line of the following form must exist in the command line processor properties file.

  ```
  MYALIAS01=connection-url,user-id,password
  ```

  Chapter 116, “CONNECT (Db2 command line processor),” on page 623 describes the syntax for *connection-url*,*user-id*, and *password*.
- An alias of db2 for the command that starts the Db2 command line processor must be created:

  ```
  alias db2="java com.ibm.db2.clp.db2"
  ```

- The database server to which you connect must not be a data sharing system.

See Setting up the Db2 command line processor (Db2 Installation and Migration) for more information.

About this task

This tutorial demonstrates how to perform the same tasks in theDb2 command line processor that you can perform in SPUFI or DSNTEP2. In addition, this tutorial demonstrates how to call stored procedures from the Db2 command line processor.

In this tutorial, you will learn how to do the following Db2 command line processor tasks:

- Start and stop the Db2 command line processor
- List and modify Db2 command line processor options
- Connect to a database server
- Execute SQL statements to create, populate, query and drop a table
- Create a stored procedure
- Call a stored procedure

Conventions used in this tutorial: Although input to the Db2 command line processor is mostly case insensitive, SQL statements and command line processor commands are shown in uppercase for consistency with other Db2 operations.

Procedure

1. Start the command line processor, and set command line processor options.
   a) Start the command line processor by typing the predefined alias:

   ```
   db2
   ```

© Copyright IBM Corp. 1983, 2024

The command line processor starts, and the following prompt is displayed:

```
db2 =>
```

b) Connect to a Db2 database server using the predefined connection alias:

```
CONNECT to MYALIAS01
```

The connection is established, and the following information about the connection is displayed:

```
     Database Connection Information
 Database server        =Db2 server version
 SQL authorization ID   =User ID
 JDBC Driver            =JDBC driver name and version
DSNC101I : The "CONNECT" command completed successfully.
db2 =>
```

Information about the JDBC driver is displayed because the command line processor is a Java database application.

c) Check the current settings of the command line processor options to determine whether they are right for your command line processor session:

```
LIST COMMAND OPTIONS
```

A list of command line processor options and their current settings is displayed:

```
Option  Description                                  Current Setting
------  -------------------------------------------  ---------------

-a      Display SQLCA                                OFF
-c      Auto-Commit                                  ON
-f      Read from input file                         OFF
-o      Display output                               ON
-s      Stop execution on command error              OFF
-t      Set statement termination character          OFF
-u      Use user ID and password for input file      OFF
-v      Echo current command                         OFF
-x      Suppress printing of column headings         OFF
-z      Save all output to output file               OFF


DSNC101I : The "LIST COMMAND OPTIONS" command completed successfully.

db2 =>
```

The options are described in Table 31 on page 587.

d) Suppose that you want to perform commit operations explicitly, so you want to disable autocommit. To do that, you need to set the c option to OFF:

```
UPDATE COMMAND OPTIONS USING c OFF
```

The following message is displayed, which indicates that you have successfully disabled the autocommit option:

```
DSNC101I : The "UPDATE COMMAND OPTIONS" command completed successfully.

db2 =>
```

2. Run SQL statements to query and modify data.

a) Run an SQL CREATE statement to create a copy of sample employee table:

```
CREATE TABLE MY_EMP LIKE DSN8C10.EMP
```

b) Run an SQL INSERT statement to populate your copy of the sample employee table from the sample employee table:

```
INSERT INTO MY_EMP SELECT * FROM DSN8C10.EMP
```

c) Commit the previously run SQL operations:

```
COMMIT
```

d) To make the output easier to read on the screen, set the maximum width of any column data that is returned to 12:

```
CHANGE MAXCOLUMNWIDTH TO 12
```

e) Run this SELECT statement, to ensure that the table was created and the rows were inserted successfully:

```
SELECT FIRSTNME, MIDINIT, LASTNAME FROM MY_EMP ORDER BY LASTNAME
```

Rows from table MY_EMP are displayed:

```
FIRSTNME     MIDINIT LASTNAME
BRUCE                ADAMSON
ROY          R       ALONZO
DAVID                BROWN
JOHN         B       GEYER
JASON        R       GOUNOT
...
MICHAEL      L       THOMPSON
JAMES        H       WALKER
HELENA               WONG
KIYOSHI              YAMAMOTO
MASATOSHI    J       YOSHIMURA
  42 record(s) selected

db2
=>
```

3. Terminate the command line processor, and restart it with a different set of options.

a) Terminate the command line processor:

Terminate the command line processor:

```
TERMINATE
```

Control returns to z/OS UNIX System Services.

b) Start the command line processor with the statement termination character set to the pound sign (#), so that you can terminate statements within an SQL PL procedure with semicolons (;):

```
db2 -td#

db2 =>
```

c) Change the command line processor option for saving output to a file. Issue the following command to direct the command line processor to save the output to a file named clplog.txt, and to display the output on the screen:

```
UPDATE COMMAND OPTIONS USING z ON clplog.txt#
```

d) Connect to a Db2 database server using the predefined connection alias:

```
CONNECT to MYALIAS01#
```

4. Create and call a stored procedure. Save the output to a file.

a) Create stored procedure CALC_SAL.

Type the following lines on the display. Press Enter after you type each line. The command line processor considers all text up to the pound sign (#) to be a single statement.

```
CREATE PROCEDURE CALC_SAL(INOUT EMPNO_IN CHAR(6),
 IN PCT_RAISE DECIMAL(2,2),
 OUT EMPNAME VARCHAR(15),
 OUT SAL_CALC DECIMAL(9,2))
```

```
 LANGUAGE SQL
BEGIN
 DECLARE CURRENT_SALARY DECIMAL(9,2) DEFAULT 0;
 SELECT LASTNAME, SALARY INTO EMPNAME, CURRENT_SALARY FROM MY_EMP
  WHERE EMPNO=EMPNO_IN;
 SET SAL_CALC=CURRENT_SALARY*PCT_RAISE+CURRENT_SALARY;
END#
```

b) Call the CALC_SAL stored procedure to find out what the salary of employee '000100' will be if you give the employee a 5% raise:

```
CALL CALC_SAL('000100',.05,?,?)#
```

The following output is displayed:

```
Value of output parameters
--------------------------
Parameter Name : EMPNO_IN
Parameter Value : 000100
Parameter Name : EMPNAME
Parameter Value : SPENSER
Parameter Name : SAL_CALC
Parameter Value : 27457.50

DSNC101I : The "CALL" command completed successfully.

db2 =>
```

c) Run the z/OS UNIX System Services cat command from within the command line processor to view the contents of the clplog.txt file. The exclamation mark (!) at the beginning of a statement indicates that it is a z/OS UNIX System Services command.

```
!cat clplog.txt#
```

The contents of the clplog.txt file are displayed:

```
DSNC101I : The "UPDATE COMMAND OPTIONS" command completed successfully.

Value of output parameters
--------------------------
Parameter Name : EMPNO_IN
Parameter Value : 000100
Parameter Name : EMPNAME
Parameter Value : SPENSER
Parameter Name : SAL_CALC
Parameter Value : 27457.50

DSNC101I : The "CALL" command completed successfully.

db2 =>
```

5. Clean up all objects that you created for this tutorial, and exit the command line processor.

a) Change the command line processor option for saving output to a file back to its original setting of OFF:

```
UPDATE COMMAND OPTIONS USING z OFF#
```

b) Drop the SQL objects that you created, and commit the changes.

```
DROP TABLE MY_EMP#
```

```
DROP PROCEDURE CALC_SAL#
```

```
COMMIT#
```

c) Delete the file that contains command line processor output.

```
!rm clplog.txt#
```

d) Terminate the command line processor session:

```
TERMINATE#
```

The command line processor session ends.

Chapter 107. Running the Db2 command line processor in batch mode

When you run the Db2 command line processor in batch mode, you can run all SQL statements in the batch as a single transaction.

Before you begin

- Your z/OS UNIX System Services .profile file and CLPPROPERTIES files need to be set up so that you can use the Db2 command line processor.

  See Setting up the Db2 command line processor (Db2 Installation and Migration) for more information. Perform the optional steps as well as the required step in the procedure.
- To enable you to run the example in this topic, you need to make the following changes to the Db2 command line processor environment:
  - Include the alias MYALIAS01 for your connection information in the command line processor properties file. A line of the following form must exist in the command line processor properties file.

    ```
    MYALIAS01=connection-url,user-id,password
    ```

    Chapter 116, “CONNECT (Db2 command line processor),” on page 623 describes the syntax for *connection-url*,*user-id*, and *password*.

About this task

To run the Db2 command line processor in batch mode, you provide the input from a file. When you run in batch mode, you can specify options to direct the command line processor to issue all of the SQL statements in the file in a single transaction. The transaction does not succeed unless all SQL statements succeed. If one or more SQL statements receive a negative SQLCODE, all SQL work is rolled back to the previous commit point.

To commit all SQL work in the input file, you include a COMMIT or TERMINATE statement at the end of the file. If there is no COMMIT or TERMINATE statement at the end of the file, all work is rolled back to the previous commit point.

Important: In the following situations that involve calls to stored procedures, a set of SQL statements are not executed as a single transaction because of COMMIT statements in the stored procedures or stored procedure definitions:

- A CALL statement in the input file calls a stored procedure that contains a COMMIT statement.
- A CALL statement in the input file calls a stored procedure that is defined as COMMIT ON RETURN YES.

In both cases, any SQL statements in the input file before the CALL statement are also committed.

Important: If you call a stored procedure that does work other than issuing SQL statements, such as issuing Db2 commands or utilities, the failure of SQL statements has no effect on the command or utility work. If the command or utility work completes successfully, that work is not rolled back if an SQL statement fails.

Procedure

To execute a set of SQL statements as a single transaction, follow these steps.

1. Create the Db2 command line processor input file in z/OS UNIX System Services.
2. Change to the directory that contains the input file that you created in the previous step.
3. Start the Db2 command line processor with a command like this one:

© Copyright IBM Corp. 1983, 2024

```
db2 +c -s -f file-name
```

- *file-name* is the input file that you created in step "1" on page 605.
- +c specifies that the SQL statements in the input file are not to be automatically committed.
- -s specifies that the Db2 command line processor stops processing input and exits if an error occurs during execution of an SQL statement or a Db2 command line processor command.

Example

Create a file named test.sql file with the following contents.

```
-- Input file for running Db2 Command Line Processor
-- in batch mode.
--
-- Issue a UNIX System Services cat command by
-- specifying ! before the command text
!cat test.sql
-- On the system that you set up to run the Db2 command line
-- processor, create a file with this content called test.sql.
-- Issue db2 +c -s -f test.sql to run it.
CONNECT TO MYALIAS01
LIST COMMAND OPTIONS
!echo CREATE DATABASE TESTDB
CREATE DATABASE TESTDB
CREATE TABLESPACE TESTSP IN TESTDB
CREATE TABLE TEST(COL1 INT NOT NULL, \
 COL2 VARCHAR(15), PRIMARY KEY(COL1)) IN TESTDB.TESTSP
CREATE UNIQUE INDEX INDEX1 ON TEST(COL1)
INSERT INTO TEST VALUES(1, 'ROW01')
INSERT INTO TEST VALUES(2, 'ROW02')
INSERT INTO TEST VALUES(3, 'ROW03')
INSERT INTO TEST VALUES(4, 'ROW04')
SELECT * FROM TEST
UPDATE TEST SET COL2='ROW000002' WHERE COL1=2
UPDATE TEST SET COL2='ROW000004' WHERE COL1=4
SELECT * FROM TEST
UPDATE TEST SET COL1=21 WHERE COL1=1
UPDATE TEST SET COL2='ROW0000021' WHERE COL1=1
SELECT * FROM TEST
-- The following statement will fail because the table name
-- does not exist (It is TSET instead of TEST.)
-- All SQL work in this file will be rolled back.
DELETE FROM TSET WHERE COL1=21
SELECT * FROM TEST
TERMINATE
```

Change to the directory that contains the test.sql file, and run the Db2 command line processor with test.sql as input:

```
db2 +c -s -f test.sql
```

Because the DELETE statement fails, all SQL work is rolled back.

Comment out the DELETE statement, and rerun Db2 command line processor with test.sql as input. All SQL statements are committed when the TERMINATE command runs.

Related reference

Db2 command line processor return codes
The command line processor returns a return code after execution.

Chapter 108. Db2 command line processor return codes

The command line processor returns a return code after execution.

In interactive mode, a return code of 0 is always returned after the user terminates the command line processor.

The Db2 command line processorreturns returns one of the following return (or exit) code after processing an input file in batch mode.

0
: The Db2 command line processor commands or SQL statements executed successfully.

1
: A statement was not terminated with the expected statement terminator.

255
: All other errors, including invalid syntax, input file not found, and other error situations.

Related tasks

Running the Db2 command line processor in batch mode
When you run the Db2 command line processor in batch mode, you can run all SQL statements in the batch as a single transaction.

© Copyright IBM Corp. 1983, 2024

Chapter 109. ADD XMLSCHEMA DOCUMENT (Db2 command line processor)

The ADD XMLSCHEMA DOCUMENT command adds one or more XML schema documents to an existing but incomplete XML schema.

```
>>- ADD XMLSCHEMA DOCUMENT --- TO --- relational-identifier ->

>-+-------------------------------------------------------------+-->
  |                                                             |
  |   .-------------------------------------------------.       |
  |   V                                                 |       |
  +-- ADD --- schemaLocation-URI --- FROM --- content-URI -+-----+
                                              |           |
                                              +- WITH --- properties-URI -+

>-+-------------------------------------------------------------+-><
  |                                                             |
  +- COMPLETE -+-------------------------------+-+-------------+-+
               |                               | |             | |
               +- WITH --- schema-properties-URI -+ ENABLE DECOMPOSITION -+
```

TO *relational-identifier*
Specifies the relational name of a registered, but incomplete, XML schema to which additional schema documents are to be added.

The schema of the relational identifier must be SYSXSR. If you specify a qualified name, the qualifier must be SYSXSR, such as, SYSXSR.MYSCHEMA. If you specify an unqualified name, you need to execute the SQL statement SET SCHEMA="SYSXSR" before you execute the command. A name that is enclosed in quotation marks, such as "SYSXSR.MYSCHEMA," is considered an unqualified name. Qualifiers or schema names that are enclosed in quotation marks are not folded to uppercase. Qualifiers or schema names that are not enclosed in quotation marks are folded to uppercase.

ADD *schemaLocation-URI*
Specifies the schema location URI of an XML schema document that is to be added to this schema, as the document is likely to be referenced from another XML document.

FROM *content-URI*
Specifies the URI where the actual content of an XML schema document is located. The command line processor supports only file URIs, which begin with file://.

WITH *properties-URI*
Specifies that the URI of a properties document is to be associated with a schema document. The command line processor supports only file URIs, which begin with file://.

COMPLETE
Indicates that no more XML schema documents need to be associated with this XML schema, other than those that are indicated in this ADD XML SCHEMA DOCUMENT command. Validation of the schema is to be performed, and, if no errors are found, the schema is to be marked as usable. Until XML schema registration is completed, the schema is not visible to or usable in other SQL or XML commands.

WITH *schema-properties-URI*
Specifies the URI of a properties document to be associated with this XML schema. The command line processor supports only file URIs, which begin with file://. A schema properties document can be specified only when the XML schema is also being completed.

ENABLE DECOMPOSITION
Indicates that this schema is to be used for the purpose of decomposing XML documents. This option can be specified only when the XML schema is also being completed.

© Copyright IBM Corp. 1983, 2024

Examples

Example: Adding documents to an XML schema and completing schema registration

An XML schema that is referred to by the relational name JOHNDOE.PRODSCHEMA1 already is registered. Two more documents need to be added to the list of schema documents associated with the schema. The first document is http:// mycompany.com/xml/schema/order.xsd, which is stored locally in /u/temp. The second document is http:// othercompany.com/external/po.xsd, which is also stored locally in /u/temp. Neither document has an associated properties file, and you are certain that no other documents are referenced by the schema. Issue these commands to add the documents and complete registration:

```
ADD XMLSCHEMA DOCUMENT TO JOHNDOE.PRODSCHEMA1
ADD http://mycompany.com/xml/schema/order.xsd
FROM file:///u/temp/order.xsd
ADD http://othercompany.com/external/po.xsd
FROM file:///u/temp/po.xsd
COMPLETE
```

Example: Adding documents to an XML schema without completing schema registration

An XML schema that is referred to by the relational name JOHNDOE.TEST is registered, and you need to add a single document without completing the registration. The schema document is http:// johndoe.com/test/test3.xsd and it is stored locally in /usr/jdoe/test/test3.xsd. Issue this command to add the document:

```
ADD XMLSCHEMA DOCUMENT TO JOHNDOE.TEST
ADD http://johndoe.com/test/test3.xsd
FROM file:///usr/jdoe/test/test3.xsd
```

Related concepts

XML schema management with the XML schema repository (XSR) (Db2 Programming for XML)

Chapter 110. BIND (Db2 command line processor)

The BIND command binds DBRMs that are in hierarchical file system (HFS) files into a package.

```
>>- BIND --- file-name --- -collection --- collection-name ---+-------------------+---><
                                                             |  bind-options     |
                                                             +-------------------+
```

file-name
The absolute or relative path name of the file that contains a DBRM.

collection-name
The name of the package collection into which you want to bind the DBRM.

bind-options
Specifies one or more of the bind options that are listed in Chapter 14, “BIND and REBIND options for packages, plans, and services ,” on page 81. Bind options must be separated by spaces.

Examples

Example: Binding a package with the command line processor
Suppose that you compiled a C language Db2 application whose full path name is /u/usrt005/APP01.c. The compilation process created a DBRM named /u/usrt005/APP01.dbrm. You want to bind the DBRM into package collection PKG01, with bind options ISOLATION(CS) and RELEASE(DEALLOCATE). Use this command to perform the bind:

```
BIND /u/usrt005/APP01.dbrm -collection PKG01 ISOLATION(CS) RELEASE(DEALLOCATE)
```

Related reference

BIND and REBIND options for packages, plans, and services
There are several options you can use for binding or rebinding packages, plans, and services. Some of the options are common for both BIND and REBIND operations.

© Copyright IBM Corp. 1983, 2024

Chapter 111. CHANGE ISOLATION (Db2 command line processor)

The CHANGE ISOLATION command changes the isolation level for SQL statements that the command line processor executes.

```
►►─ CHANGE ISOLATION ─── TO ─┬─ RR ─┬─►◄
                            ├─ RS ─┤
                            ├─ CS ─┤
                            └─ UR ─┘
```

See "ISOLATION bind option" on page 128 for the meanings of the isolation levels.

During the command line processor session, the CHANGE ISOLATION command overrides the isolation value that is set in the IsolationLevel property in the command line processor properties file. The CHANGE ISOLATION command cannot be executed if a transaction is active.

Related tasks

Choosing an ISOLATION option (Db2 Performance)

Related reference

ISOLATION bind option
The ISOLATION option determines how far to isolate an application from the effects of other running applications.

Properties file for the Db2 command line processor
You can use a properties file to set your own defaults for Db2 command line processor properties.

© Copyright IBM Corp. 1983, 2024

Chapter 112. CHANGE MAXCOLUMNWIDTH (Db2 command line processor)

The CHANGE MAXCOLUMNWIDTH command changes the number of bytes in a table column that the Db2 command line processor returns.

```
►►─ CHANGE MAXCOLUMNWIDTH ── TO ── integer ─►◄
```

integer

The maximum number of bytes in any column that is displayed after execution of:

- An SQL SELECT statement
- An SQL CALL statement that returns a result set
- A command line processor LIST TABLES, DESCRIBE TABLE, or DESCRIBE CALL command

This value overrides the value of the MaxColumnWidth command line processor property during the command line processor session.

Related reference

Properties file for the Db2 command line processor
You can use a properties file to set your own defaults for Db2 command line processor properties.

© Copyright IBM Corp. 1983, 2024

Chapter 113. CHANGE MAXLINESFROMSELECT (Db2 command line processor)

The CHANGE MAXLINESFROMSELECT command changes the number of rows that the command line processor returns.

```
►►─ CHANGE MAXLINESFROMSELECT ── TO ── integer ─►◄
```

integer

The maximum number of rows that are displayed after execution of:

- An SQL SELECT statement
- An SQL CALL statement that returns a result set
- A command line processor LIST TABLES, DESCRIBE TABLE, or DESCRIBE CALL command

This value overrides the value of the MaxLinesFromSelect command line processor property during the command line processor session.

Related reference

Properties file for the Db2 command line processor
You can use a properties file to set your own defaults for Db2 command line processor properties.

© Copyright IBM Corp. 1983, 2024

Chapter 114. COMMIT (Db2 command line processor)

The command line processor COMMIT command commits all SQL work since the previous commit or rollback operation, and releases any database locks that are currently held by the active connection.

The Db2 command line processor COMMIT command performs the same function as the SQL COMMIT statement.

```
►►─ COMMIT ─►◄
```

Notes®

Implicit commit operation

By default, *autocommit mode* is enabled. This means that the command line processor implicitly issues a COMMIT statement after execution of every SQL statement. If an active connection exists, and you issue a new CONNECT command, the command line processor closes the currently active connection before making the new connection. When autocommit mode is enabled, the new connection can be established. However, if autocommit mode is disabled, you need to issue a COMMIT or ROLLBACK command before you issue the new CONNECT command. Otherwise, an error occurs.

Related reference

COMMIT statement (Db2 SQL)

Start syntax for the Db2 command line processor

You start the Db2 command line processor by running the Java program com.ibm.db2.clp.db2 from z/OS UNIX System Services.

© Copyright IBM Corp. 1983, 2024

Chapter 115. COMPLETE XMLSCHEMA (Db2 command line processor)

The COMPLETE XMLSCHEMA command completes the registration of an XML schema.

```
►► COMPLETE XMLSCHEMA ── relational-identifier ──┬──────────────────────────┬──►◄
                                                 └── WITH ── schema-properties-URI ──┘
```

relational-identifier
Specifies the relational name that was assigned to an XML schema in a previous REGISTER XMLSCHEMA command.

The schema of the relational identifier must be SYSXSR. If you specify a qualified name, the qualifier must be SYSXSR; for example, SYSXSR.MYSCHEMA. If you specify an unqualified name, you need to execute the SQL statement `SET SCHEMA="SYSXSR"` before you execute the command. A name that is enclosed in quotation marks, such as "SYSXSR.MYSCHEMA", is considered an unqualified name. Qualifiers or schema names that are enclosed in quotation marks are not folded to uppercase. Qualifiers or schema names that are not enclosed in quotation marks are folded to uppercase.

WITH *schema-properties-URI*
Specifies the URI of a properties document that is to be associated with this XML schema. The command line processor supports only file URIs, which begin with file://.

Example: Adding documents to an XML schema and completing schema registration
Suppose that a schema with relational name PRODSCHEMA is already registered. The schema has additional properties that are stored locally in file /u/temp/CUSTPROP.xml. Issue this command to complete registration:

```
COMPLETE XMLSCHEMA PRODSCHEMA WITH 'file:///u/temp/CUSTPROP.xml'
```

Related concepts
XML schema management with the XML schema repository (XSR) (Db2 Programming for XML)

© Copyright IBM Corp. 1983, 2024

Chapter 116. CONNECT (Db2 command line processor)

The CONNECT command establishes a connection to a Db2 server.

```
CONNECT — TO ┬─ connection-url ─ USER — user-id — USING — password ─┬
             └──────────────────────── connection-alias ────────────┘

connection-url
server ┬──────┬ / database ┬──────────────────────┬
       └ :port┘            └ :connection-properties┘

connection-properties
┌──────────────────────┐
└─ property = value; ──┘
```

TO *connection-url*
Specifies the Db2 database system to which the connection is made. It consists of the following parts:

server
The domain name or IP address of the Db2 database system.

port
The TCP/IP server port number that is assigned to the Db2 database system. This is an integer in the range 0–65535. The default is 446.

database
A name for the Db2 database system. *database* is the Db2 location name that is defined during installation. All characters in the Db2 location name must be uppercase characters.

You can determine the location name by executing the following SQL statement on the Db2 database system to which you want to connect:

```
SELECT CURRENT SERVER FROM SYSIBM.SYSDUMMY1;
```

connection-properties
A list of IBM Data Server Driver for JDBC and SQLJ properties and their values. You can specify one or more property and value pairs. Each property and value pair, including the last one, must end with a semicolon (;). Do not include spaces or other white space characters anywhere within the list of property and value strings.

Specify connection properties only if your system administrator tells you to do so.

USER *user-id*
The authorization name to use when connecting to the Db2 server.

This name is case insensitive. However, if you run the LIST TABLES command to see your own tables, the case of *user-id* must match the case of the schema name for your tables. For example, if you connect to the Db2 database server with a user ID of myid, LIST TABLES does not list tables with a schema name of MYID.

USING *password*
The password for the authorization name that is used when connecting to the Db2 server.

© Copyright IBM Corp. 1983, 2024

connection-alias

A name that corresponds to an entry in the properties file that is defined by the CLPPROPERTIESFILE environment variable. That entry specifies the connection URL, user ID, and password for the connection.

Example: Making a connection for the command line processor by specifying a connection URL, ID and password

Suppose that your system administrator told you that the Db2 server against which you want to use the command line processor has the connection URL syszos1.abc.com:5021/ABCLOC1. Your ID is myid01 and your password is mypw01. Use this command to make a connection to that server:

```
CONNECT TO syszos1.abc.com:5021/ABCLOC1 USER myid01 USING mypw01
```

Example: Making a connection for the command line processor by specifying a connection alias

Suppose that the CLPPROPERTIESFILE environment variable specifies a file named `clp.properties`. In that file, the following connection alias is defined:

```
MYALIAS01=syszos1.abc.com:5021/ABCLOC1,myid01,mypw01
```

Use this command to make a connection using the connection alias:

```
CONNECT TO MYALIAS01
```

Example: Specifying a user ID and password or RACF PassTicket to run an SQL file

Suppose that you want to use the Db2 command line processor to connect to a server and your system administrator provides the following connection URL for the server: `syszos1.abc.com:5021/ABCLOC1`

You can create a file named `script.sql` that contains the following statement:

```
CONNECT TO syszos1.abc.com:5021/ABCLOC1
```

Also suppose that the alias db2 has been set for the Db2 command line processor name, and your user ID is myid01. If your password is mypw01, you can use the following command to connect to the server:

```
db2 -f script.sql -u myid01/mypw01
```

If your credential is the RACF PassTicket phrase TMOK73SJ, you can use the following command to connect to the server:

```
db2 -f script.sql -u myid01/TMOK73SJ
```

Related reference

Properties for the IBM Data Server Driver for JDBC and SQLJ (Db2 Application Programming for Java)

Properties file for the Db2 command line processor

You can use a properties file to set your own defaults for Db2 command line processor properties.

Chapter 117. DESCRIBE CALL (Db2 command line processor)

The DESCRIBE CALL command returns information about the parameters of a stored procedure.

For each parameter, DESCRIBE CALL returns the following information:

- Parameter name
- Parameter type: IN, OUT, or INOUT
- Data type
- Length
- Scale
- Nullability: yes, no, or unknown

```
►► DESCRIBE CALL ──┬──────────────┬── .procedure-name ►◄
                   └─ schema-name ─┘
```

schema-name
The schema name of the stored procedure for which parameter information is returned. The default is the user ID under which the command line processor session is running.

procedure-name
The name of the stored procedure for which parameter information is returned.

Example: Displaying parameter information for the SYSPROC.DSNUTILU stored procedure
Suppose that you want to display information about the Db2-supplied SYSPROC.DSNUTILU stored procedure. You do not want the output to wrap on your display, so you want the column widths in the output to be at most 12 bytes. Use these commands to set the column width and display the parameter information:

```
CHANGE MAXCOLUMNWIDTH TO 12
DISPLAY CALL SYSPROC.DSNUTILU
```

The following information is displayed:

COLUMN_NAME	COLUMN_TYPE	TYPE_NAME	PRECISION	LENGTH	SCALE	NULLABLE
UTILITY_ID	1	VARCHAR	16	16	<null>	0
RESTART	1	VARCHAR	8	8	<null>	0
UTSMT	1	CLOB	2147483647	2147483647	<null>	0
RETCODE	4	INTEGER	10	4	<null>	0

Mapping information for COLUMN_TYPE

0 - Unknown
1 - IN parameter
2 - INOUT parameter
3 - Result column in ResultSet
4 - OUT parameter
5 - Procedure return value

Mapping information for NULLABLE

0 - Does not allow NULL values

© Copyright IBM Corp. 1983, 2024

1 - Allow NULL values
2 - Nullability unknown

Related reference

CHANGE MAXCOLUMNWIDTH (Db2 command line processor)
The CHANGE MAXCOLUMNWIDTH command changes the number of bytes in a table column that the Db2 command line processor returns.

CALL statement (Db2 SQL)

Chapter 118. DESCRIBE TABLE (Db2 command line processor)

The DESCRIBE TABLE command returns information about the columns of a table.

For each column, DESCRIBE TABLE returns the following information:

- Column name
- Table qualifier
- Data type
- Length
- Scale
- Nullability: yes, no, or unknown

```
►► DESCRIBE TABLE ──┬──────────────┬── .table-name ──►◄
                    └─ table-creator ─┘
```

table-creator
The user ID of the table creator. The default is the user ID under which the command line processor session is running.

table-name
The name of the table for which column information is returned.

Example: Displaying column information for the DSN8C10.DEPT table
Suppose that you want to display information about Db2 sample table DSN8C10.DEPT. You do not want the output to wrap on your display, so you want the column widths in the output to be at most 14 bytes. Use these commands to set the column width and display the parameter information:

```
CHANGE MAXCOLUMNWIDTH TO 14
DESCRIBE TABLE DSN8C10.EMP
```

The following information is displayed:

COLUMN_-NAME	TABLE_SCHEM	TYPE_NAME	COLUMN_-SIZE	DECIMAL_-DIGITS	IS_NULLABLE
DEPTNO	DSN8C10	CHAR	3	<null>	NO
DEPTNAME	DSN8C10	VARCHAR	36	<null>	NO
MGRNO	DSN8C10	CHAR	6	<null>	YES
ADMRDEPT	DSN8C10	CHAR	3	<null>	NO
LOCATION	DSN8C10	INTEGER	16	<null>	YES

Related reference
CHANGE MAXCOLUMNWIDTH (Db2 command line processor)
The CHANGE MAXCOLUMNWIDTH command changes the number of bytes in a table column that the Db2 command line processor returns.

CREATE TABLE statement (Db2 SQL)

© Copyright IBM Corp. 1983, 2024

Chapter 119. DISCONNECT (Db2 command line processor)

The command line processor DISCONNECT command closes the current connection to a Db2 server.

DISCONNECT succeeds only if no transactions are in progress.

```
►►─ DISCONNECT ─►◄
```

Related reference

CONNECT (Db2 command line processor)
The CONNECT command establishes a connection to a Db2 server.

© Copyright IBM Corp. 1983, 2024

Chapter 120. DISPLAY RESULT SETTINGS (Db2 command line processor)

The DISPLAY RESULT SETTINGS command lists the current settings for the maximum column width and the maximum number of rows that are returned for queries that the command line processor executes.

The values that are displayed correspond to the values of command line processor properties MaxColumnWidth and MaxLinesFromSelect, or the overrides that you specify with the CHANGE MAXCOLUMNWIDTH and CHANGE MAXLINESFROMSELECT commands.

```
►►─ DISPLAY RESULT SETTINGS ─►◄
```

Related reference

Properties file for the Db2 command line processor
You can use a properties file to set your own defaults for Db2 command line processor properties.

CHANGE MAXLINESFROMSELECT (Db2 command line processor)
The CHANGE MAXLINESFROMSELECT command changes the number of rows that the command line processor returns.

CHANGE MAXCOLUMNWIDTH (Db2 command line processor)
The CHANGE MAXCOLUMNWIDTH command changes the number of bytes in a table column that the Db2 command line processor returns.

© Copyright IBM Corp. 1983, 2024

Chapter 121. ECHO (Db2 command line processor)

The ECHO command writes the contents of a text string to the output stream.

The ECHO command is useful for generating labels in an output file.

```
▶▶─ ECHO ── string ─▶◀
```

Example: Use the ECHO command to identify a query in the output file

Suppose that you start the command line processor with the option -z output.txt. You connect to a Db2 server and execute these commands:

```
ECHO Find all tables that are not catalog tables:
ECHO SELECT NAME FROM SYSIBM.SYSTABLES WHERE NAME NOT LIKE 'SYS%'
SELECT NAME FROM SYSIBM.SYSTABLES WHERE NAME NOT LIKE 'SYS%'
```

output.txt contains output like this:

```
Find all tables that are not catalog tables:
SELECT NAME FROM SYSIBM.SYSTABLES WHERE NAME NOT LIKE 'SYS%'
NAME
...
ACT
AGEGROUP
AUX_BMP_PHOTO
AUX_EMP_RESUME
AUX_PSEG_PHOTO
...
```

Related reference

Start syntax for the Db2 command line processor

You start the Db2 command line processor by running the Java program com.ibm.db2.clp.db2 from z/OS UNIX System Services.

© Copyright IBM Corp. 1983, 2024

Chapter 122. LIST COMMAND OPTIONS (Db2 command line processor)

The LIST COMMAND OPTIONS command lists command line processor option flags, and indicates whether those option flags are set to ON or OFF.

```
►►─ LIST COMMAND OPTIONS ─►◄
```

Related reference

Start syntax for the Db2 command line processor

You start the Db2 command line processor by running the Java program com.ibm.db2.clp.db2 from z/OS UNIX System Services.

© Copyright IBM Corp. 1983, 2024

Chapter 123. LIST TABLES (Db2 command line processor)

The LIST TABLES command lists tables, views, or aliases on a Db2 server.

```
►► LIST TABLES ──┬──────────────────────────────┬──►◄
                 └─ FOR ─┬─ USER ──────────────┬─┘
                         ├─ SYSTEM ────────────┤
                         ├─ ALL ───────────────┤
                         └─ SCHEMA ── schema-name ─┘
```

FOR USER
Displays a list of tables, views, and aliases with a schema name that matches the user ID of the user that issued the CONNECT command to connect the command line processor to a Db2 server. The case of the user ID in the CONNECT command must match the case of the CREATOR value in SYSIBM.SYSTABLES for a table to be listed. FOR USER is the default.

FOR SYSTEM
Displays a list of catalog tables on the Db2 server.

FOR ALL
Displays a list of all tables, views, and aliases on the Db2 server.

FOR SCHEMA *schema-name*
Displays a list of all tables, views, and aliases with a schema name that matches *schema-name*.

Example: Listing tables, views, and aliases for the currently connected user
Suppose that you connected the command line processor to a Db2 server with user ID ADMF001. You want to display a list of tables, views, and aliases with a schema name of ADMF001. You do not want the output to wrap on your display, so you set the column widths on the display to at most 14 bytes. Use these commands to set the column width and display the list.

```
CHANGE MAXCOLUMNWIDTH TO 14
LIST TABLES
```

Information like this is displayed:

TABLE_SCHEM	TABLE_NAME	TABLE_TYPE
ADMF001	MYALIAS01	SYNONYM
ADMF001	MYTABLE01	TABLE
ADMF001	MYTABLE02	TABLE
ADMF001	MYVIEW01	VIEW

Example: Listing tables, views, and aliases for a specified schema name
Suppose that you want to display a list of tables, views, and aliases with a schema name of DSN8C10. You do not want the output to wrap on your display, and you do not want columns of up to 30 bytes to be truncated, so you set the column widths on the display to at most 30 bytes. Use these commands to set the column width and display the list.

```
CHANGE MAXCOLUMNWIDTH TO 30
LIST TABLES FOR SCHEMA DSN8C10
```

Information like this is displayed:

© Copyright IBM Corp. 1983, 2024

TABLE_SCHEM	TABLE_NAME	TABLE_TYPE
DSN8C10	AUX_BMP_PHOTO	AUXILIARY TABLE
DSN8C10	AUX_EMP_RESUME	AUXILIARY TABLE
DSN8C10	AUX_PSEG_PHOTO	AUXILIARY TABLE
DSN8C10	DSN_QUERY_AUX	AUXILIARY TABLE
DSN8C10	DSN_STATEMENT_CACHE_AUX	AUXILIARY TABLE

...

Related reference

CHANGE MAXCOLUMNWIDTH (Db2 command line processor)
The CHANGE MAXCOLUMNWIDTH command changes the number of bytes in a table column that the Db2 command line processor returns.

CONNECT (Db2 command line processor)
The CONNECT command establishes a connection to a Db2 server.

SYSTABLES catalog table (Db2 SQL)

Chapter 124. REGISTER XMLSCHEMA (Db2 command line processor)

The REGISTER XMLSCHEMA command registers an XML schema with the Db2 database manager.

```
REGISTER XMLSCHEMA ──┬──────────────────────┬── FROM ── content-URI ──►
                     └─ schemaLocation-URI-1 ─┘

►──┬──────────────────────┬── AS ── relational-identifier ──►
   └─ WITH ── properties-URI ─┘

►──┬──────────────────┬──►◄
   └─ sub-document-clause ─┘
```

sub-document-clause

```
►►─ ADD ── schemaLocation-URI-2 ── FROM ── content-URI ──┬──────────────────────┬──►
                                                        └─ WITH ── properties-URI ─┘

►──┬──────────────────────────────────────────────────────┬──►◄
   └─ COMPLETE ──┬──────────────────────────────────────┬─┘
                 └─ WITH ── schema-properties-URI ──────┘
```

schemaLocation-URI-1
Specifies the schema location URI of the XML schema that is to be registered. The schema location is referenced from XML instance documents or the SQL XML schema validation function. If a single XML schema references multiple schema documents, each XML schema document other than the primary document must also be registered. Each document can be registered in either the sub-document clause in the REGISTER XMLSCHEMA command or in a separate ADD XMLSCHEMA DOCUMENT command.

FROM *content-URI*
Specifies the URI where the actual content of an XML schema document is located. The command line processor supports only file URIs, which begin with file://. The XML schema document must be in the Unicode encoding scheme.

WITH *properties-URI*
Specifies the URI of a properties document that are to be associated with a schema document. The command line processor supports only file URIs, which begin with file://.

AS *relational-identifier*
Specifies a name that can be used to refer to the XML schema in relational SQL or XML.

The schema of the relational identifier must be SYSXSR. If you specify a qualified name, the qualifier must be SYSXSR; for example, SYSXSR.MYSCHEMA. If you specify an unqualified name, you need to execute the SQL statement `SET SCHEMA="SYSXSR"` before you execute the command. A name that is enclosed in quotation marks, such as "SYSXSR.MYSCHEMA", is considered as an unqualified name. Qualifiers or schema names that are enclosed in quotation marks are not folded to uppercase. Qualifiers or schema names that are not enclosed in quotation marks are folded to uppercase.

ADD *schemaLocation-URI-2*
Specifies the schema location URI of a related XML schema document, as it is referenced by this XML schema document.

© Copyright IBM Corp. 1983, 2024

COMPLETE

Indicates that there are no more XML schema documents to be associated with this XML schema. Validation of the schema is performed, and if there are no errors are found, the schema is to be marked as usable. Until XML schema registration is completed, the schema is not visible to or usable in other SQL or XML commands.

WITH *schema-properties-URI*

Specifies the URI of a properties document that is to be associated with this XML schema. The CLP supports only file URIs, which begin with file://. A schema properties document can be specified only when the XML schema is also being completed.

Example: Registering and completing an XML schema with a single XML schema document

Suppose that you want to register an XML schema named http://mycompany.com/prod/p1_1.xsd, and to make it available immediately. The content of the XML schema is a single document that has file URI file:///u/temp/p1_1.xsd. In SQL statements, you want to refer to the XML schema as EXAMPLE.TEST1. Use the following command to register and complete the XML schema.

```
REGISTER XMLSCHEMA http://mycompany.com/prod/p1_1.xsd
FROM file:///u/temp/p1_1.xsd AS EXAMPLE.TEST1 COMPLETE
```

Example: Registering and completing an XML schema with multiple XML schema documents

Suppose that you want to register an XML schema named http://mycompany.com/prod/cust.xsd,and to make it available immediately. The content of the XML schema consists of three documents. The contents of the three documents are locally stored as file:///u/temp/cust1.xsd, file:///u/temp/cust2.xsd, and file:///u/temp/cust3.xsd. The schema location URIs for the documents are http://mycompany.com/prod/cust1.xsd, http://mycompany.com/prod/cust2.xsd, and http://mycompany.com/prod/cust3.xsd. In SQL statements, you want to refer to the XML schema as PRODSCHEMA. Additional properties for the XML schema are stored in a file with file URI file:///u/temp/CUSTPROP.XML. Use following to register and complete the XML schema.

```
REGISTER XMLSCHEMA http://mycompany.com/prod/cust.xsd
FROM file:///u/temp/cust.xsd'
AS PRODSCHEMA WITH file:///u/temp/CUSTPROP.XML
ADD http://mycompany.com/prod/cust1.xsd
FROM file:///u/temp/cust1.xsd
ADD http://mycompany.com/prod/cust2.xsd
FROM file:///u/temp/cust2.xsd
ADD http://mycompany.com/prod/cust3.xsd
FROM file:///u/temp/cust3.xsd
COMPLETE
```

Related concepts

XML schema management with the XML schema repository (XSR) (Db2 Programming for XML)

Chapter 125. REMOVE XMLSCHEMA (Db2 command line processor)

The REMOVE XMLSCHEMA command deletes a previously registered XML schema from the XML schema repository.

```
►►─ REMOVE XMLSCHEMA ── relational-identifier ─►◄
```

relational-identifier

Specifies a name that is used to refer to the XML schema in relational SQL or XML. This value is the relational identifier that you used when you registered the XML schema.

The relational identifier has the qualifier SYSXSR. If you specify REMOVE XMLSCHEMA with an unqualified relational identifier, you must have previously executed a SET SCHEMA SQL statement to set the schema name to SYSXSR.

Example: Removing an XML schema from the XML schema repository

Suppose that you want to remove an XML schema with relational identifier SYSXSR.PRODSCHEMA from the XML schema repository. Run this command:

```
REMOVE XMLSCHEMA SYSXSR.PRODSCHEMA
```

Related concepts

XML schema management with the XML schema repository (XSR) (Db2 Programming for XML)

© Copyright IBM Corp. 1983, 2024

Chapter 126. ROLLBACK (Db2 command line processor)

The ROLLBACK command rolls back all SQL work since the previous commit or rollback operation, and releases any database locks that are currently held by the active connection.

The Db2 command line processor COMMIT command performs the same function as the SQL ROLLBACK statement.

```
►►─ ROLLBACK ─►◄
```

Notes

ROLLBACK and autocommit mode

If autocommit mode is enabled, the ROLLBACK command has no effect.

Related reference

COMMIT statement (Db2 SQL)

Start syntax for the Db2 command line processor

You start the Db2 command line processor by running the Java program com.ibm.db2.clp.db2 from z/OS UNIX System Services.

© Copyright IBM Corp. 1983, 2024

Chapter 127. SQL statements (Db2 command line processor)

Execute SQL statements in the Db2 command line processor after you issue the CONNECT command.

The SQL statements that can be executed in the command line processor have the same syntax as SQL statements that are executed in application programs.

```
►►─┬─ALTER statement──────────────────────────────────────────────►◄
   ├─CALL statement──────────────────────────────────────────────┤
   ├─CREATE statement────────────────────────────────────────────┤
   ├─DELETE statement────────────────────────────────────────────┤
   ├─DROP statement──────────────────────────────────────────────┤
   ├─GRANT statement─────────────────────────────────────────────┤
   ├─INSERT statement────────────────────────────────────────────┤
   ├─REVOKE statement────────────────────────────────────────────┤
   ├─SELECT statement────────────────────────────────────────────┤
   └─UPDATE statement────────────────────────────────────────────┘
```

Notes

Specifying output parameters in a CALL statement

To specify an output parameter in a CALL statement, use a question mark (?).

Examples

Example: Executing a query with the command line processor

Suppose that the sample tables are installed on a Db2 server with connection URL syszos1.abc.com:5021/ABCLOC1. Use the following commands to connect to that server, and isse a SELECT statement to display all the rows in the sample employee table.

```
CONNECT TO syszos1.abc.com:5021/ABCLOC1 USER myid01 USING mypw01
SELECT * FROM DSN8C10.EMP
```

Example: Calling a stored procedure with the command line processor

Suppose that you want to display information about all of the subsystem parameters, application programming defaults, and IRLM parameters for a Db2 server. The Db2-supplied stored procedure SYSPROC.ADMIN_INFO_SYSPARM provides that information. Use the following commands to connect to the server, and call the stored procedure.

```
CONNECT TO syszos1.abc.com:5021/ABCLOC1 USER myid01 USING mypw01
CALL SYSPROC.ADMIN_INFO_SYSPARM(NULL,?,?)
```

Related concepts

Queries (Db2 SQL)

Related reference

Statements (Db2 SQL)

© Copyright IBM Corp. 1983, 2024

Chapter 128. TERMINATE (Db2 command line processor)

The TERMINATE command stops the Db2 command line processor.

```
►►─ TERMINATE ─►◄
```

Related reference

Start syntax for the Db2 command line processor

You start the Db2 command line processor by running the Java program com.ibm.db2.clp.db2 from z/OS UNIX System Services.

© Copyright IBM Corp. 1983, 2024

Chapter 129. z/OS UNIX System Services (Db2 command line processor)

The z/OS UNIX System Services command can be run in the command line processor can be run by preceding the command with an exclamation mark (!).

```
►►─ ! ── unix-command ─►◄
```

!
Indicates that the text that follows is a this is a z/OS UNIX System Services command.

unix-command
Any z/OS UNIX System Services command.

Examples

Example: Listing files in the current directory
Suppose that you are in a command line processor session, and you need to run the z/OS ls command to obtain a list of files in the current directory. Run this command:

```
!ls
```

© Copyright IBM Corp. 1983, 2024

Chapter 130. UPDATE COMMAND OPTIONS (Db2 command line processor)

The UPDATE COMMAND OPTIONS command changes property values for properties that have a value of ON or OFF.

```
►►─ UPDATE COMMAND OPTIONS ─── USING ─┬─ option-flag ─── ON ──┬─►◄
                                      ├─ option-flag ─── OFF ─┤
                                      ├─ property-keyword ─── ON ─┤
                                      └─ property-keyword ─── OFF ─┘
```

option-flag

One of the following option flags:

- a
- c
- o
- s
- v
- x
- z (OFF only)

See Chapter 102, “Start syntax for the Db2 command line processor,” on page 587 for the meaning of each option flag.

property-keyword

One of the following option flags:

- DisplaySQLCA
- AutoCommit
- DisplayOutput
- StopOnError
- Echo
- StripHeaders

See Chapter 103, “Properties file for the Db2 command line processor,” on page 591 for the meaning of each property keyword.

Related reference

Start syntax for the Db2 command line processor
You start the Db2 command line processor by running the Java program com.ibm.db2.clp.db2 from z/OS UNIX System Services.

Properties file for the Db2 command line processor
You can use a properties file to set your own defaults for Db2 command line processor properties.

© Copyright IBM Corp. 1983, 2024

Information resources for Db2 for z/OS and related products

You can find the online product documentation for Db2 12 for z/OS and related products in IBM Documentation.

For all online product documentation for Db2 12 for z/OS, see IBM Documentation (https://www.ibm.com/docs/en/db2-for-zos/12).

For other PDF manuals, see PDF format manuals for Db2 12 for z/OS (https://www.ibm.com/docs/en/db2-for-zos/12?topic=zos-pdf-format-manuals-db2-12).

© Copyright IBM Corp. 1983, 2024

Notices

This information was developed for products and services offered in the US. This material might be available from IBM in other languages. However, you may be required to own a copy of the product or product version in that language in order to access it.

IBM may not offer the products, services, or features discussed in this document in other countries. Consult your local IBM representative for information on the products and services currently available in your area. Any reference to an IBM product, program, or service is not intended to state or imply that only that IBM product, program, or service may be used. Any functionally equivalent product, program, or service that does not infringe any IBM intellectual property right may be used instead. However, it is the user's responsibility to evaluate and verify the operation of any non-IBM product, program, or service.

IBM may have patents or pending patent applications covering subject matter described in this document. The furnishing of this document does not give you any license to these patents. You can send license inquiries, in writing, to:

IBM Director of Licensing IBM Corporation
North Castle Drive, MD-NC119
Armonk, NY 10504-1785 US

For license inquiries regarding double-byte (DBCS) information, contact the IBM Intellectual Property Department in your country or send inquiries, in writing, to:

Intellectual Property Licensing Legal and Intellectual Property Law IBM Japan Ltd.
19-21, Nihonbashi-Hakozakicho, Chuo-ku
Tokyo 103-8510, Japan

INTERNATIONAL BUSINESS MACHINES CORPORATION PROVIDES THIS PUBLICATION "AS IS" WITHOUT WARRANTY OF ANY KIND, EITHER EXPRESS OR IMPLIED, INCLUDING, BUT NOT LIMITED TO, THE IMPLIED WARRANTIES OF NON-INFRINGEMENT, MERCHANTABILITY OR FITNESS FOR A PARTICULAR PURPOSE. Some jurisdictions do not allow disclaimer of express or implied warranties in certain transactions, therefore, this statement may not apply to you.

This information could include technical inaccuracies or typographical errors. Changes are periodically made to the information herein; these changes will be incorporated in new editions of the publication. IBM may make improvements and/or changes in the product(s) and/or the program(s) described in this publication at any time without notice.

Any references in this information to non-IBM websites are provided for convenience only and do not in any manner serve as an endorsement of those websites. The materials at those websites are not part of the materials for this IBM product and use of those websites is at your own risk.

IBM may use or distribute any of the information you supply in any way it believes appropriate without incurring any obligation to you.

Licensees of this program who wish to have information about it for the purpose of enabling: (i) the exchange of information between independently created programs and other programs (including this one) and (ii) the mutual use of the information which has been exchanged, should contact:

IBM Director of Licensing IBM Corporation
North Castle Drive, MD-NC119
Armonk, NY 10504-1785 US

Such information may be available, subject to appropriate terms and conditions, including in some cases, payment of a fee.

The licensed program described in this document and all licensed material available for it are provided by IBM under terms of the IBM Customer Agreement, IBM International Program License Agreement or any equivalent agreement between us.

© Copyright IBM Corp. 1983, 2024

This information contains examples of data and reports used in daily business operations. To illustrate them as completely as possible, the examples include the names of individuals, companies, brands, and products. All of these names are fictitious and any similarity to actual people or business enterprises is entirely coincidental.

COPYRIGHT LICENSE:

This information contains sample application programs in source language, which illustrate programming techniques on various operating platforms. You may copy, modify, and distribute these sample programs in any form without payment to IBM, for the purposes of developing, using, marketing or distributing application programs conforming to the application programming interface for the operating platform for which the sample programs are written. These examples have not been thoroughly tested under all conditions. IBM, therefore, cannot guarantee or imply reliability, serviceability, or function of these programs. The sample programs are provided "AS IS", without warranty of any kind. IBM shall not be liable for any damages arising out of your use of the sample programs.

Each copy or any portion of these sample programs or any derivative work must include a copyright notice as shown below:

© (*your company name*) (*year*).
Portions of this code are derived from IBM Corp. Sample Programs.
© Copyright IBM Corp. (*enter the year or years*).

If you are viewing this information softcopy, the photographs and color illustrations may not appear.

Programming interface information

This information is intended to help you to plan for and administer Db2 12 for z/OS. This information primarily documents General-use Programming Interface and Associated Guidance Information provided by Db2 12 for z/OS. This information also documents Product-sensitive Programming Interface and Associated Guidance Information provided by Db2 12 for z/OS.

General-use Programming Interface and Associated Guidance Information

General-use Programming Interfaces allow the customer to write programs that obtain the services of Db2 12 for z/OS.

Product-sensitive Programming Interface and Associated Guidance Information

Product-sensitive Programming Interfaces allow the customer installation to perform tasks such as diagnosing, modifying, monitoring, repairing, tailoring, or tuning of this IBM software product. Use of such interfaces creates dependencies on the detailed design or implementation of the IBM software product. Product-sensitive Programming Interfaces should be used only for these specialized purposes. Because of their dependencies on detailed design and implementation, it is to be expected that programs written to such interfaces may need to be changed in order to run with new product releases or versions, or as a result of service.

Product-sensitive Programming Interface and Associated Guidance Information is identified where it occurs by the following markings:

PSPI Product-sensitive Programming Interface and Associated Guidance Information... PSPI

Trademarks

IBM, the IBM logo, and ibm.com® are trademarks or registered marks of International Business Machines Corp., registered in many jurisdictions worldwide. Other product and service names might be trademarks of IBM or other companies. A current list of IBM trademarks is available on the web at "Copyright and trademark information" at: http://www.ibm.com/legal/copytrade.shtml.

Linux is a registered trademark of Linus Torvalds in the United States, other countries, or both.

Microsoft, Windows, Windows NT, and the Windows logo are trademarks of Microsoft Corporation in the United States, other countries, or both.

UNIX is a registered trademark of The Open Group in the United States and other countries.

Java and all Java-based trademarks and logos are trademarks or registered trademarks of Oracle and/or its affiliates.

Terms and conditions for product documentation

Permissions for the use of these publications are granted subject to the following terms and conditions:

Applicability: These terms and conditions are in addition to any terms of use for the IBM website.

Personal use: You may reproduce these publications for your personal, noncommercial use provided that all proprietary notices are preserved. You may not distribute, display or make derivative work of these publications, or any portion thereof, without the express consent of IBM.

Commercial use: You may reproduce, distribute and display these publications solely within your enterprise provided that all proprietary notices are preserved. You may not make derivative works of these publications, or reproduce, distribute or display these publications or any portion thereof outside your enterprise, without the express consent of IBM.

Rights: Except as expressly granted in this permission, no other permissions, licenses or rights are granted, either express or implied, to the publications or any information, data, software or other intellectual property contained therein.

IBM reserves the right to withdraw the permissions granted herein whenever, in its discretion, the use of the publications is detrimental to its interest or, as determined by IBM, the above instructions are not being properly followed.

You may not download, export or re-export this information except in full compliance with all applicable laws and regulations, including all United States export laws and regulations.

IBM MAKES NO GUARANTEE ABOUT THE CONTENT OF THESE PUBLICATIONS. THE PUBLICATIONS ARE PROVIDED "AS-IS" AND WITHOUT WARRANTY OF ANY KIND, EITHER EXPRESSED OR IMPLIED, INCLUDING BUT NOT LIMITED TO IMPLIED WARRANTIES OF MERCHANTABILITY, NON-INFRINGEMENT, AND FITNESS FOR A PARTICULAR PURPOSE.

Privacy policy considerations

IBM Software products, including software as a service solutions, (“Software Offerings”) may use cookies or other technologies to collect product usage information, to help improve the end user experience, to tailor interactions with the end user, or for other purposes. In many cases no personally identifiable information is collected by the Software Offerings. Some of our Software Offerings can help enable you to collect personally identifiable information. If this Software Offering uses cookies to collect personally identifiable information, specific information about this offering’s use of cookies is set forth below.

This Software Offering does not use cookies or other technologies to collect personally identifiable information.

If the configurations deployed for this Software Offering provide you as customer the ability to collect personally identifiable information from end users via cookies and other technologies, you should seek your own legal advice about any laws applicable to such data collection, including any requirements for notice and consent.

For more information about the use of various technologies, including cookies, for these purposes, see IBM’s Privacy Policy at http://www.ibm.com/privacy and IBM’s Online Privacy Statement at http://www.ibm.com/privacy/details the section entitled “Cookies, Web Beacons and Other Technologies” and the “IBM Software Products and Software-as-a-Service Privacy Statement” at http://www.ibm.com/software/info/product-privacy.

Glossary

The glossary is available in IBM Documentation

For definitions of Db2 for z/OS terms, see Db2 glossary (Db2 Glossary).

© Copyright IBM Corp. 1983, 2024

Index

Special Characters

-DISPLAY DYNQUERYCAPTURE (DB2)
    command 235
-DISPLAY STATS (DB2)
    command 281
-START DYNQUERYCAPTURE
    command 477
-STOP DYNQUERYCAPTURE (DB2)
    command 543
* (asterisk)
    DISPLAY THREAD command 289
    FREE PACKAGE command 357
    FREE QUERY command 362
    REBIND PACKAGE command 136, 405
* option
    START ML command 491
    STOP ML command 551
. (asterisk)
    DISPLAY PROCEDURE command 268
    START PROCEDURE command 494
    STOP FUNCTION SPECIFIC command 546
    STOP PROCEDURE command 554

A

ABEND subcommand of DSN
    description 15
ACCELERATIONWAITFORDATA option
    BIND PACKAGE subcommand 82
    BIND PLAN subcommand 82
    REBIND PACKAGE subcommand 82
    REBIND PLAN subcommand 82
ACCELERATOR option
    BIND PACKAGE subcommand 81
    BIND PLAN subcommand 81
    REBIND PACKAGE subcommand 81
    REBIND PLAN subcommand 81
accelerators
    displaying 181
ACCESS DATABASE
    command 17
ACCESS option
    START DATABASE command 464
    START DB2 command 470
accessibility
    keyboard xiii
    shortcut keys xiii
accounting
    trace
        displaying 301
        starting 505
        stopping 565
ACCTG option
    DISPLAY TRACE command 304
    MODIFY TRACE command 394
    STOP TRACE command 569
ACQUIRE option
    BIND PLAN subcommand 83
    DSNH command 340
    REBIND PLAN subcommand 83
ACTION option
    BIND PACKAGE subcommand 84
    BIND PLAN subcommand 84
    DCLGEN subcommand 173
    DSNH command 340
    RECOVER INDOUBT command 422
    STOP FUNCTION SPECIFIC command 546
    STOP PROCEDURE command 554
ACTIVATE command 23
activating
    function levels 23
ACTIVE option
    DISPLAY BUFFERPOOL command 194
    DISPLAY DATABASE command 219
ADD option
    DCLGEN subcommand 173
    DSNH command 343
ADD XMLSCHEMA DOCUMENT command 609
administrative task scheduler
    commands
        MODIFY admtproc, APPL=SHUTDOWN option 367
        MODIFY admtproc, APPL=TRACE option 369
        START admtproc 457
        STOP admtproc 527
    starting
        an administrative task scheduler 457
    stopping
        an administrative task scheduler 527
Administrative task scheduler commands 9
ADVISORY option of DISPLAY DATABASE command 220
AFTER option of DISPLAY DATABASE command 219
ALL keyword of MODIFY irlmproc,DIAG command 379
ALLD option of MODIFY irlmproc,STATUS command of z/OS 387
ALLI option of MODIFY irlmproc,STATUS command of z/OS 388
ALTER BUFFERPOOL command
    description 27
    example 35
    Option descriptions 28, 29
ALTER GROUPBUFFERPOOL command
    description 37
    example 40
    Option descriptions 37
ALTER UTILITY command
    description 43
    example 45
ambiguous cursor 100
APCOMPARE option
    BIND PACKAGE subcommand 85
    REBIND PACKAGE subcommand 85
    REBIND TRIGGER PACKAGE subcommand 85
APOST option

APOST option *(continued)*
DCLGEN subcommand 174
DSNH command 332
APOSTSQL option of DSNH command 338
APPLCOMPAT
bind option 87
APPLCOMPAT option
BIND PACKAGE subcommand 87
REBIND PACKAGE subcommand 87
REBIND TRIGGER PACKAGE subcommand 87
application plan
binding 65
deleting 359
rebinding, changing plans 407
application program
testing 316
application program, preparing for DSNH CLIST processing 321
APPNAME option
DISPLAY TRACE command 304
START TRACE command 513
STOP TRACE command 569
APRETAINDUP option
REBIND PACKAGE subcommand 88
REBIND TRIGGER PACKAGE subcommand 88
APREUSE option
BIND PACKAGE subcommand 89
REBIND PACKAGE subcommand 89
REBIND TRIGGER PACKAGE subcommand 89
ARCHIVE LOG command
description 47
option descriptions 48
ARCHIVESENSITIVE option
BIND PACKAGE subcommand 92
REBIND PACKAGE subcommand 92
REBIND TRIGGER PACKAGE subcommand 92
ASMLIB option of DSNH command 327
ASMLOAD option of DSNH command 327
asterisk (*.*)
DISPLAY PROCEDURE command 268
START PROCEDURE command 494
STOP FUNCTION SPECIFIC command 546
STOP PROCEDURE command 554
asterisk (*)
DISPLAY THREAD command 289
FREE PACKAGE command 357
FREE QUERY command 362
REBIND PACKAGE command 136, 405
ASUSER option
DSN command 317
AT option of DCLGEN subcommand 173
AT(COMMIT) option of STOP DATABASE command 534
AUDIT option
DISPLAY TRACE command 304
MODIFY TRACE command 394
STOP TRACE command 569
audit trace
displaying 301
starting 505
stopping 565
AUDTPLCY option
DISPLAY TRACE command 307
STOP TRACE command 572
AUDTPLCY option of START TRACE command 519
AUTHID option
DISPLAY TRACE command 304
START TRACE command 511
STOP TRACE command 569
AUTOREC option of ALTER GROUPBUFFERPOOL command 38

B

batch mode
Db2 command line processor 605
BDBRMLIB option of DSNH command 341
BDMEM option of DSNH command 340
BIND command 611, 619, 645
bind options
APPLCOMPAT 87
BIND PACKAGE subcommand of DSN
description 53
example 62
option descriptions 81, 156
BIND PLAN subcommand of DSN
description 65
example 69
option descriptions 81, 156
BIND QUERY command
option descriptions 72
BIND QUERY subcommand of DSN
description 71
example 73
BIND SERVICE
DESCRIPTION bind option 109
NAME bind option 132
RESTSERVICEDEFAULT bind option 151
SQLDDNAME bind option 153
SQLENCODING bind option 154
VERSION bind option 161
BIND SERVICE subcommand of DSN
description 75
binding
DSNH processing 321
initiating 53, 65
options for 81, 156
binding Db2 for z/OS packages 163
BLIB option of DSNH command 341
BMEM option of DSNH command 341
BnLIB option of DSNH command 341
BOTH option
SET LOG command 442
BSDS (bootstrap data set), recovery 419
buffer pool
active and inactive 27, 193
altering attributes 27
displaying current status 193
parallel sequential steal threshold (VPSEQT) 31
BUFSIZE option of START TRACE command 519
BUSTIMESENSITIVE option
BIND PACKAGE subcommand 93
REBIND PACKAGE subcommand 93
REBIND TRIGGER PACKAGE subcommand 93

C

C option of DCLGEN subcommand 174

CACHESIZE option
BIND PLAN subcommand 94
DSNH command 341
REBIND PLAN subcommand 94
CANCEL OFFLOAD option of ARCHIVE LOG command 49
CANCEL option of RECOVER POSTPONED command 425
CANCEL THREAD command
description 165
example 170
canceling threads, description 165
CASTOUT option of STOP DB2 command 537
CATMAINT utility, effects of TERM command 578
CCLINK option of DSNH command 327
CCLLIB option of DSNH command 327
CCLOAD option of DSNH command 327
CCMSGS option of DSNH command 327
CCOLIB option of DSNH command 328
CCPLIB option of DSNH command 328
CCPMSGS option of DSNH command 328
CCSID option of DSNH command 327
CCSLIB option of DSNH command 328
CHECK DATA utility, effects of TERM command 578
CHECK INDEX utility, effects of TERM command 578
CHECK LOB utility, effects of TERM command 578
CHKTIME option
SET LOG command 442
CICS
option of BIND and REBIND subcommands 117
option of DSNH command 341
translation step in DSNH processing 321
CICS commands 9
CICSCOB option of DSNH command 328
CICSLLIB option of DSNH command 328
CICSOPT option of DSNH command 328
CICSPLIB option of DSNH command 328
CICSPRE option of DSNH command 328
CICSVER option of DSNH command 328
CICSXLAT option of DSNH command 328
CLAIMERS option of DISPLAY DATABASE command 217
CLASS option
DISPLAY TRACE command 305
IFCIDs activated by trace class 514
MODIFY TRACE command 394
START TRACE command 514
STOP TRACE command 570
CLASST option of ALTER GROUPBUFFERPOOL command 38
CLIB option of DSNH command 329
CLONE option
START DATABASE command 464
STOP DATABASE command 534
CnLIB option of DSNH command 329
COB2CICS option of DSNH command 329
COB2LIB option of DSNH command 329
COB2LOAD option of DSNH command 329
COBICOMP option of DSNH command 329
COBILINK option of DSNH command 329
COBIPLNK option of DSNH command 329
COBIPMSG option of DSNH command 329
COBLIB option of DSNH command 329
COBLOAD option of DSNH command 329
COBSOM option of DSNH command 329
code, return 318
collection, package
BIND PACKAGE subcommand 135
collection, package *(continued)*
REBIND PACKAGE subcommand 135
REBIND TRIGGER PACKAGE subcommand 415
COLLID option
REBIND PLAN subcommand 94
COLSUFFIX option of DCLGEN subcommand 175
column name, as a field name 175
comma option of DSNH command 332
command line processor
CHANGE ISOLATION command 613
CHANGE MAXCOLUMNWIDTH command 615
CHANGE MAXLINESFROMSELECT command 617
command for stopping 647
CONNECT command 623
DESCRIBE CALL command 625
DESCRIBE TABLE command 627
DISCONNECT command 629
DISPLAY RESULT SETTINGS command 631
ECHO command 633
help command 595
LIST COMMAND OPTIONS command 635
LIST TABLES command 637
properties file 591
ROLLBACK command 643
TERMINATE command 647
UPDATE COMMAND OPTIONS command 651
z/OS UNIX System Services command 649
command prefix
multiple subsystems 471
command text
in Db2 recovery log 3
commands
-DISPLAY DYQUERYCAPTURE (DB2) 235
-DISPLAY STATS (DB2) 281
-START DYNQUERYCAPTURE (DB2) 477
-STOP DYQUERYCAPTURE (DB2) 543
ACCESS DATABASE 17
ACTIVATE 23
continuation character 3
in Db2 recovery log 3
operands 3
output size 3
parsing rules 3
prefix 3
recognition character (CRC) 3
scope 3
syntax 3
commands types
Administrative task scheduler 9
CICS 9
Db2 9
DSN and subcommands 9
IMS 9
TSO CLISTs 9
z/OS IRLM 9
comment
DCLGEN subcommand output 176
DSN subcommands 316
COMMENT option
DISPLAY TRACE command 304
MODIFY TRACE command 395
START TRACE command 509
STOP TRACE command 569
commit point, terminating utility 577

COMP option of TRACE CT command 582
COMPILE option of DSNH command 330
COMPLETE XMLSCHEMA command 621
CONCENTRATESTMT option
    BIND PACKAGE subcommand 95
    REBIND PACKAGE subcommand 95
CONCURRENTACCESSRESOLUTION option
    BIND PACKAGE command 96
    BIND PLAN command 96
    REBIND PACKAGE command 96
    REBIND PLAN command 96
    REBIND TRIGGER PACKAGE command 96
conditional restart
    control record, effect on restart 471
CONNECT option of DSN command 330
connection
    Db2
        GROUP option of DSN command 317
        RETRY option of DSN command 317
    displaying
        connection information 287
        group buffer pool 250
        IRLM subsystem status 389
CONNID option
    DISPLAY TRACE command 304
    START TRACE command 513
    STOP TRACE command 569
CONNLIST option of DISPLAY GROUPBUFFERPOOL command 249
CONTROL option of DSNH command 330
COPTION option of DSNH command 330
COPY option
    BIND PACKAGE subcommand 97
    DSNH command 343
    SET LOG command 443
COPY utility, effects of TERM command 578
COPYVER option
    BIND PACKAGE subcommand 97, 108
    DSNH command 343
correlation ID
    recovering threads 422
CORRELATION option of START TRACE command 520
CORRID option
    DISPLAY TRACE command 304
    START TRACE command 514
    STOP TRACE command 569
COUNT option of SET ARCHIVE command 439
CP option of RUN subcommand 435
CPP option of DCLGEN subcommand 174
CPPCLASS option of DSNH command 330
CPPCLLIB option of DSNH command 330
CPPCSLIB option of DSNH command 330
CPPLINK option of DSNH command 330
CPPLLIB option of DSNH command 330
CPPPMSGS option of DSNH command 330
CPPSLIB option of DSNH command 331
CPPUTIL option of DSNH command 331
CPU option of START TRACE command 520
CRC (command recognition character), description 3
CURRENTDATA option
    BIND PACKAGE subcommand 100
    BIND PLAN subcommand 100
    DSNH command 341, 344
    REBIND PACKAGE subcommand 100
CURRENTDATA option *(continued)*
    REBIND PLAN subcommand 100
    REBIND TRIGGER PACKAGE subcommand 100
CURRENTSERVER option
    BIND PLAN subcommand 101
    DSNH command 341
    REBIND PLAN subcommand 101
cursor, ambiguous 100
CYLINDER option of DSNH command 338

D

data sharing
    delays, diagnosing 379
    displaying
        archive log information 187
        information about groups 241
        status of members 241
    identifying members with utility jobs 312
    scope of commands 3
    starting members 472
database
    displaying status 213
    reserved names 534
    starting 461
    stopping 531
DATE
    option of DSNH command 331
DATE bind option 103
Db2 command line processor
    running 597
    running in batch mode 605
    tutorial 599
    z/OS UNIX System Services
    585
Db2 commands
    ACTIVATE 23
    command names 3
    commands
        ACCESS DATABASE 17
        ALTER BUFFERPOOL 27
        ALTER GROUPBUFFERPOOL 37
        ALTER UTILITY 43
        ARCHIVE LOG 47
        CANCEL THREAD 165
        DISPLAY ACCEL 181
        DISPLAY BLOCKERS 189
        DISPLAY BUFFERPOOL 193
        DISPLAY DATABASE 213
        DISPLAY DDF 231
        DISPLAY GROUP 241
        DISPLAY GROUPBUFFERPOOL 247
        DISPLAY LOCATION 255
        DISPLAY ML 265
        DISPLAY PROCEDURE 267
        DISPLAY PROFILE 271
        DISPLAY RLIMIT 273
        DISPLAY THREAD 287
        DISPLAY TRACE 301
        DISPLAY UTILITY 311
        MODIFY TRACE 393
        RECOVER BSDS 419
        RECOVER INDOUBT 421
        RECOVER POSTPONED 425

Db2 commands *(continued)*
commands *(continued)*
REFRESH DB2,EARLY 427
RESET INDOUBT 431
SET SYSPARM 447
START ACCEL 453
START CDDS 459
START DATABASE 461
START DB2 469
START DDF 475
START FUNCTION SPECIFIC 481
START ML 491
START PROCEDURE 493
START PROFILE 497
START RLIMIT 499
START TRACE 505
STOP ACCEL 525
STOP CDDS 529
STOP DATABASE 531
STOP DB2 537
STOP DDF 539
STOP FUNCTION SPECIFIC 545
STOP ML 551
STOP PROCEDURE 553
STOP PROFILE 557
STOP RLIMIT 559
STOP TRACE 565
TERM UTILITY 577
completion messages 9
description of 3
DISPLAY FUNCTION SPECIFIC 237
entering from supported environments 9
scope 3
separator 3
DB2 commands
commands
DISPLAY ARCHIVE 187
RECOVER INDOUBT 423
Db2 for z/OS packages
binding from IBM Data Server clients and drivers 163
Db2 precompiler 3
Db2 recovery log
command text 3
DBM1 option of START DB2 command 471
DBPROTOCOL option
BIND PACKAGE subcommand 102
BIND PLAN subcommand 102
DSNH command 341
REBIND PACKAGE subcommand 102
REBIND PLAN subcommand 102
DBRMLIB option of DSNH command 331
DCLGEN subcommand of DSN
declaring an indicator variable array 175
description 171
example 177
forming field names 175
option descriptions 172
DDF 371
DDF (distributed data facility), displaying 231
DDF (distributed data facility), modifying 371
DEADLINE option of ALTER UTILITY command 44
DEADLOK option of START irlmproc command 486
DEC bind option 104
DECARTH option of DSNH command 331
DECDEL bind option 105
DECIMAL
option of DSNH command 332
DECP option 470
DEFAULT option of SET ARCHIVE command 440
DEFER option
BIND PACKAGE subcommand 106
BIND PLAN subcommand 106
DSNH command 341, 342
REBIND PACKAGE subcommand 106
REBIND PLAN subcommand 106
degree of parallel processing 107
DEGREE option
BIND PACKAGE subcommand 107
BIND PLAN subcommand 107
DSNH command 342
REBIND PACKAGE subcommand 107
REBIND PLAN subcommand 107
DELAY
keyword of MODIFY irlmproc,DIAG command 379
DELAY option of ALTER UTILITY command 45
DELIMIT option of DSNH command 332
DEPLOY option
BIND PACKAGE subcommand 108
deregistering IRLM 377
description 371
DESCRIPTION bind option 109
DESCSTAT option
BIND PACKAGE subcommand 110
REBIND PACKAGE subcommand 110
REBIND TRIGGER PACKAGE subcommand 110
DEST option
DISPLAY TRACE command 305
START TRACE command 510
STOP TRACE command 569
DETAIL option
DISPLAY BUFFERPOOL command 195
DISPLAY GROUP command 241
DISPLAY LOCATION command 256
DISPLAY THREAD command 292
DISPLAY TRACE command 304
DIAG keyword of MODIFY irlmproc,DIAG command 379
DIAGNOSE utility, TERM command effects 578
diagnostic dumps, IRLM 379
disability xiii
DISABLE option
BIND PACKAGE subcommand 116
BIND PLAN subcommand 116
DSNH command 342
REBIND PACKAGE subcommand 116
REBIND PLAN subcommand 116
DISCONNECT option
BIND PLAN subcommand 111
DSNH command 342
REBIND PLAN subcommand 111
DISPLAY ACCEL command
description 181
example 182
Option descriptions 181
DISPLAY ARCHIVE command 187
DISPLAY BLOCKERS command
description 189
DISPLAY BUFFERPOOL command
description 193

DISPLAY BUFFERPOOL command *(continued)*
Option descriptions 194
Output 196
DISPLAY DATABASE command
description 213
example 222
Option descriptions 216
DISPLAY DDF command
description 231
example 231
Option descriptions 231
DISPLAY FUNCTION SPECIFIC command
description 237
Examples 239
Output 238
DISPLAY GROUP command
description 241
DISPLAY GROUPBUFFERPOOL command
description 247
option descriptions 248
summary report example 250
DISPLAY LOCATION command
description 255
example 256
option descriptions 256
DISPLAY LOG 261
DISPLAY LOG command
description 261
example 261
DISPLAY ML command 265
DISPLAY NET command of VTAM 167
DISPLAY PROCEDURE command
description 267
example 269
Option descriptions 268
Output 268
DISPLAY PROFILE command
example 271
DISPLAY RLIMIT command 273
DISPLAY SERVICE subcommand of DSN
description 275
DISPLAY THREAD command
description 287
example 293
Option descriptions 289
Output 293
DISPLAY TRACE command
description 301
example 309
Option descriptions 304
DISPLAY UTILITY command
description 311
example 312
option descriptions 311
displaying
information about
accelerators 181
archive logs 187
communications database and resource limit facility 221
data sharing group 241
data-partitioned secondary indexes 222
Db2 for z/OS Orchestrated Intelligence 265
Db2 functions 237
displaying *(continued)*
information about *(continued)*
Db2 threads 287
DDF 231
logical partitions 221
logs 261
resource limit facility (governor) 273
restricted objects 221
stored procedures 267
threads with remote locations 255
trace activity 301
status of
buffer pools 193
Db2 databases 213
Db2 utilities 311
group buffer pools 247
DIST option of START DB2 command 471
DISTRIBUTED option of START TRACE command 520
DLIBATCH option
BIND and REBIND subcommands 117
DSNH command 342
DSN command
ASUSER option 317
GROUP option 317
TEST option 317
DSN command and subcommands 9
DSN command of TSO
abbreviations 3
description 315
example 319
Option descriptions 317
parsing subcommands 3
return codes 318
subcommands
ABEND 15, 316
BIND PACKAGE 53
BIND PLAN 65
BIND QUERY 71
BIND SERVICE 75
DCLGEN 171
DISPLAY SERVICE 275
END 351
FREE PACKAGE 355
FREE PLAN 359
FREE QUERY 361
FREE SERVICE 365
FREE STABILIZED DYNAMIC QUERY 353
REBIND PACKAGE 397
REBIND PLAN 407
REBIND TRIGGER PACKAGE 413
RUN 435
SPUFI 451
START RESTSVC 501
STOP RESTSVC 561
dsnb461i 208
dsnb462i 208
DSNDB01 database, authority needed to start 462
DSNDB06 database, authority needed to start 462
DSNH command of TSO
data set names 327
description 321
example 347
option descriptions 322
DSNZPARM

DSNZPARM *(continued)*
option of START DB2 command 470
DUMP option
CANCEL THREAD command 166
MODIFY irlmproc,ABEND command 377
dump, IRLM diagnostic 379
DWQT option of ALTER BUFFERPOOL command 31
DYNAMICRULES option
BIND PACKAGE subcommand 111
DSNH command 342
REBIND PACKAGE subcommand 111

E

EARLY
option of REFRESH DB2 command 427
EARLY option of START DB2 command 427
ENABLE option
BIND PACKAGE subcommand 116
BIND PLAN subcommand 116
DSNH command 342
REBIND PACKAGE subcommand 116
REBIND PLAN subcommand 116
ENCODING option
BIND PACKAGE subcommand 118
BIND PLAN subcommand 118
REBIND PACKAGE subcommand 118
REBIND PLAN subcommand 118
END subcommand of DSN
description 351
Example 351
ENTRY option of DSNH command 332
escape character
APOST option of DCLGEN subcommand 174
QUOTE option of DCLGEN subcommand 174
EXPLAIN option
BIND PACKAGE subcommand 120
BIND PLAN subcommand 120
DSNH command 342, 344
ONLY option 120
REBIND PACKAGE subcommand 120
REBIND PLAN subcommand 120
REBIND TRIGGER PACKAGE subcommand 120
extended MCS consoles, Db2 support of 9
EXTENDEDINDICATOR option
BIND PACKAGE subcommand 122
REBIND PACKAGE subcommand 122

F

FLAG option
BIND PACKAGE subcommand 123
BIND PLAN subcommand 123
DSNH command 332, 342
FREE PACKAGE subcommand 357
FREE PLAN subcommand 359
REBIND PACKAGE subcommand 123
REBIND PLAN subcommand 123
REBIND TRIGGER PACKAGE subcommand 123
FORCE option
RESET INDOUBT command 432
START DATABASE command 464
STOP DB2 command 537
FORCE option *(continued)*
STOP DDF command 540
FORCE option of CANCEL THREAD command 166
FORTLIB option of DSNH command 333
FORTLOAD option of DSNH command 333
FRAMESIZE option of ALTER BUFFERPOOL command 29
FREE PACKAGE subcommand of DSN
description 355
option descriptions 356
FREE PLAN subcommand of DSN
description 359
Example 360
Option descriptions 359
FREE QUERY subcommand of DSN
description 361
option descriptions 361
FREE SERVICE subcommand of DSN
description 365
FREE STABILIZED DYNAMIC QUERY subcommand of DSN
description 353
function levels
ACTIVATE command 23
activating 23
functions, displaying information about 237

G

GBPCACHE option of ALTER GROUPBUFFERPOOL command 38
GBPCHKPT option of ALTER GROUPBUFFERPOOL command 39
GBPOOLT option of ALTER GROUPBUFFERPOOL command 39
GDETAIL option of DISPLAY GROUPBUFFERPOOL command 249
general-use programming information, described 656
GENERIC option
BIND PACKAGE subcommand 124
REBIND PACKAGE subcommand 124
GETACCELARCHIVE option
BIND PACKAGE subcommand 124
REBIND PACKAGE subcommand 124
GLOBAL option of START irlmproc command 488
group
scope of commands 3
group buffer pool RECOVER-pending (GRECP) status,removing using START DATABASE command 465
GROUP option
DSN command 317
GTF option
DISPLAY TRACE command 305
START TRACE command 510
STOP TRACE command 570

H

HOST option of DSNH command 333

I

I/O processing, parallel, DEGREE option of bind subcommands 107
IBM Data Server clients and drivers 163

IBMCOB option of DCLGEN subcommand 174
ID option
    RECOVER INDOUBT command 422
    START RLIMIT command 499
IFCID (instrumentation facility component identifier), identifiers by trace class 514
IFCID option
    MODIFY TRACE command 394
    START TRACE command 519
IMMEDWRITE option
    BIND PACKAGE subcommand 126
    BIND PLAN subcommand 126
    REBIND PACKAGE subcommand 126
    REBIND PLAN subcommand 126
IMS commands 9
IMSBMP option
    BIND and REBIND subcommands 117
    DSNH command 342
IMSMPP option
    BIND and REBIND subcommands 118
    DSNH command 342
IMSPRE option of DSNH command 333
INACTIVE option
    DISPLAY THREAD command 290
INCLUDE statement of DCLGEN subcommand output 176
indicator variable, array declaration in DCLGEN 175
INDOUBT option
    DISPLAY THREAD command 290
indoubt thread, recovering 421
INDVAR option of DCLGEN subcommand 175
information about 371
INPUT option of DSNH command 333
INTERVAL option of DISPLAY BUFFERPOOL command 195
invalidated packages 121
IPADDR option
    DISPLAY LOCATION command 256
    RESET INDOUBT command 433
IRLM (internal resource lock manager)
    commands
        MODIFY irlmproc,ABEND 377
        MODIFY irlmproc,DIAG 379
        MODIFY irlmproc,PURGE option 381
        MODIFY irlmproc,SET option 383
        MODIFY irlmproc,STATUS option 387
        START irlmproc 485
        STOP irlmproc 549
        TRACE CT 581
    CSA
        setting maximum amount of 383
    delays, diagnosing 379
    deregistering 377
    diagnostic dumps 379
    locks, releasing 381
    modifying, diagnostic trace 581
    restarting
        effect on CSA value 384
    starting
        an IRLM component 485
        diagnostic trace 581
    status
        checking 383
    status, checking 387
    stopping
        diagnostic trace 581
IRLM (internal resource lock manager) *(continued)*
    stopping *(continued)*
        normal 549
    terminating
        abnormal 377
        normal 549
    trace buffers, setting number of 383
IRLMGRP option of START irlmproc command 486
IRLMID option of START irlmproc command 486
IRLMNM option of START irlmproc command 486
ISOLATION
    option of BIND PLAN subcommand
        description 128
ISOLATION option
    BIND PACKAGE subcommand 128
    DSNH command 342
    REBIND PACKAGE subcommand 128
    REBIND PLAN subcommand 128
    REBIND TRIGGER PACKAGE subcommand 128

K

KEEPDYNAMIC option
    BIND PACKAGE subcommand 129
    BIND PLAN subcommand 129
    DSNH command 342
    REBIND PACKAGE subcommand 129
    REBIND PLAN subcommand 129

L

LABEL option of DCLGEN subcommand 175
LANGUAGE option of DCLGEN subcommand 174
LEAVE option of DSNH command 339
LIBRARY option
    BIND PACKAGE subcommand 130
    DCLGEN subcommand 173
    RUN subcommand 436
LIGHT option, START DB2 command 470
light restart, with ARM 471
LIMIT option
    DISPLAY THREAD command 292
LIMIT option of DISPLAY DATABASE command 219
LINECOUNT option of DSNH command 333
LINK option of DSNH command 333
link-editing, processing 321
links
    non-IBM Web sites
    657
LIST option of DISPLAY BUFFERPOOL command 195
LLIB option of DSNH command 333
LnLIB option of DSNH command 333
LOAD option
    DSNH command 334
    SET SYSPARM command 448
LOAD utility, effects of TERM command 578
LOCAL option
    CANCEL THREAD command 165
LOCAL option of START irlmproc command 488
location name
    BIND PACKAGE subcommand 118, 135
    DISPLAY LOCATION command 256
    REBIND PACKAGE subcommand 118, 135

location name *(continued)*
REBIND TRIGGER PACKAGE subcommand 415
LOCATION option
DISPLAY THREAD command 290
DISPLAY TRACE command 304
RESET INDOUBT command 432
START TRACE command 512
location statistics 505
LOCKS option of DISPLAY DATABASE command 218
LOCKTABL option of START irlmproc command 486
logical page list (LPL) 465
logical partitions, displaying 221
LOGLOAD option
SET LOG command 442
LONGLOG option of ALTER UTILITY option 45
LOPTION option of DSNH command 334
LPL (logical page list)
option of DISPLAY DATABASE command 218
recovering pages
using START DATABASE command 465
LSTATS option of DISPLAY BUFFERPOOL command 195
LTE option of MODIFY irlmproc,SET command of z/OS 384
LTE option of START irlmproc command 486
LUNAME option
DISPLAY LOCATION command 256
RESET INDOUBT command 432
LUWID option
DISPLAY THREAD command 291
RECOVER INDOUBT command 422
RESET INDOUBT command 433

M

MACRO option of DSNH command 334
MAINT option of MODIFY irlmproc,STATUS command of z/OS 388
MAXCSA option of START irlmproc command 487
MAXRO option of ALTER UTILITY command 44
MAXUSRS option of START irlmproc command 487
MCS consoles
scope of commands 3
MDETAIL option of DISPLAY GROUPBUFFERPOOL command 249
member
scope of commands 3
MEMBER option
BIND PACKAGE subcommand 131
DISPLAY UTILITY command 312
MERGECOPY utility, effects of TERM command 578
message
DB2 commands 9
DCLGEN subcommand 174
DISPLAY UTILITY command 312
DSN command of TSO 318
DSNH command 332
FLAG option of bind subcommands 123
FREE PACKAGE subcommand 357
FREE PLAN subcommand 359
MODIFY irlmproc,STATUS command 389
RUN subcommand 436
message by identifier
DSN7100I 241
DSN9022I 9
DSN9023I 9
message by identifier *(continued)*
DSNJ315I 50
DSNJ316I 50
DSNJ317I 50
DSNJ318I 49
DSNL440I to DSNL449I 433
DSNL448I 432
DSNL450I 167
DSNT736I 534
DSNU100I 312
DSNU105I 312
DSNU106I 312
DSNW133I 510
MLT option of MODIFY irlmproc,SET command of z/OS 384, 487
MODE option
ARCHIVE LOG command 48
STOP DB2 command 537
STOP DDF command 539
MODIFY admtproc
shutdown 367
Trace 369
MODIFY admtproc command of z/OS
Examples 369
MODIFY admtproc,,APPL=SHUTDOWN command of z/OS
description 367
MODIFY admtproc,,APPL=TRACE command of z/OS
description 369
MODIFY admtproc,APPL=SHUTDOWN command of z/OS
Examples 367
MODIFY DDF 371
MODIFY DDF command 371
MODIFY irlmproc,ABEND command of z/OS
description 377
Example 377
MODIFY irlmproc,DIAG command of z/OS
description 379
Example 380
MODIFY irlmproc,PURGE command of z/OS
description 381
Example 381
MODIFY irlmproc,SET command of z/OS
description 383
example 385
option descriptions 381, 383
MODIFY irlmproc,STATUS command of z/OS
description 387
example 389
Option descriptions 387
MODIFY RECOVERY utility, effects of TERM command 579
MODIFY STATISTICS utility, effects of TERM command 579
MODIFY TRACE command
description 393
Example 395
modifying 371

MONITOR option
DISPLAY TRACE command 304
MODIFY TRACE command 394
STOP TRACE command 569
monitor trace
displaying 301
starting 505
stopping 565
MSTR option of START DB2 command 471

N

NAME bind option 132
NAMES option of DCLGEN subcommand 174
NEWFUN option of DSNH command 334
NEWLOG option
SET LOG command 443
NID (network ID) option of RECOVER INDOUBT command 422
nnn option
START irlmproc command 489
NO LIMIT option of SET ARCHIVE command 440
NO option
START irlmproc command 489
NOBACKOUT option of CANCEL THREAD command 166
NODEFER option
BIND PACKAGE subcommand 106
BIND PLAN subcommand 106
DSNH command 342
REBIND PACKAGE subcommand 106
REBIND PLAN subcommand 106
NODISCON option of START irlmproc command 488
NODUMP option of MODIFY irlmproc,ABEND command 377
NOFOR option of DSNH command 334
NOINDOUBTS option
START DB2 command 469
NONE keyword of MODIFY irlmproc,DIAG command 380
NOWRAP option of TRACE CT command 581

O

ONLY option of DISPLAY DATABASE command 218
OP option
START TRACE command 510
STOP TRACE command 570
operands, Db2 commands 3
OPTHINT option
BIND PACKAGE subcommand 133
BIND PLAN subcommand 133
DSNH command 342
REBIND PACKAGE subcommand 133
REBIND PLAN subcommand 133
options for starting 587
OPTIONS option
DSNH command 334
OUTNAME option of DSNH command 334
OVERVIEW option of DISPLAY DATABASE command 219
OWNER option
BIND PACKAGE subcommand 134
BIND PLAN subcommand 134
DCLGEN subcommand 173
DSNH command 342
REBIND PACKAGE subcommand 134
OWNER option *(continued)*
REBIND PLAN subcommand 134

P

P irlmproc command. 549
package
binding, initiating 53
identifier
BIND PACKAGE subcommand 135
REBIND TRIGGER PACKAGE subcommand 415
rebinding 397
rebinding trigger 413
replacing version of 85
PACKAGE option of DSNH command 345
PACTION option of DSNH command 343
parallel processing
DEGREE option of bind subcommands 107
VPPSEQT option of ALTER BUFFERPOOL command 31
parameter, passing to application program 436
PARM option of START DB2 command 470
PARMS option
DSNH command 334
RUN subcommand 436
parsing rules, Db2 commands 3
PART option
DISPLAY DATABASE command 218
START DATABASE command 463
STOP DATABASE command 533
partial-ipaddr, DISPLAY LOCATION command 256
partial-location name, DISPLAY LOCATION command 256
PASS option of DSNH command 335
PATH option
BIND PACKAGE subcommand 137
BIND PLAN subcommand 137
DSNH command 342
REBIND PACKAGE subcommand 137
REBIND PLAN subcommand 137
PATHDEFAULT option
REBIND PACKAGE subcommand 138
REBIND PLAN subcommand 138
PBIND option of DSNH command 343
PC option of START irlmproc command 488
PCICS option of DSNH command 343
PCLOAD option of DSNH command 335
PDBPROTOCOL option of DSNH command 344
PDBRMLIB option of DSNH command 344
PDEFER option of DSNH command 344
PDEGREE option of DSNH command 344
PDISABLE option of DSNH command 344
PDLIBATCH option of DSNH command 344
PDMEM option of DSNH command 344
PDYNAMICRULES option of DSNH command 344
PENABLE option of DSNH command 344
PERFM option
DISPLAY TRACE command 304
MODIFY TRACE command 394
STOP TRACE command 569
performance trace
displaying 301
stopping 565
performance, trace
starting 505
PFLAG option of DSNH command 345

PGPROT option of START irlmproc command 488
PGSTEAL option of ALTER BUFFERPOOL command 32
phases of execution for DSNH processing 321
PIMSBMP option of DSNH command 345
PIMSMPP option of DSNH command 345
PISOLATION option of DSNH command 345
PKEEPDYNAMIC option of DSNH command 345
PKGCOL option
    DISPLAY TRACE command 304
    START TRACE command 511
    STOP TRACE command 569
PKGLOC option
    DISPLAY TRACE command 304
    START TRACE command 511
    STOP TRACE command 569
PKGPROG option
    DISPLAY TRACE command 304
    START TRACE command 511
    STOP TRACE command 569
PKLIST option
    BIND PLAN subcommand 138
    DSNH command 342
    REBIND PLAN subcommand 138
PL/I application program, macro processing step for DSNH 321
PLAN
    option of DSNH command 335
PLAN option
    BIND PLAN subcommand 140
    DISPLAY TRACE command 304
    DSNH command 343
    REBIND PLAN subcommand 140
    RUN subcommand 435
    START TRACE command 511
    STOP TRACE command 569
PLANMGMT option
    BIND PACKAGE subcommand 140
    REBIND PACKAGE subcommand 140
    REBIND TRIGGER PACKAGE subcommand 140
PLANMGMTSCOPE option
    FREE PACKAGE subcommand 357
PLI option of DCLGEN subcommand 174
PLI2LIB option of DSNH command 335
PLIB option of DSNH command 335
PLILIB option of DSNH command 335
PLILOAD option of DSNH command 335
PLIPLNK option of DSNH command 335
PLIPMSG option of DSNH command 335
PLOCK keyword of MODIFY irlmproc,DIAG command 379
PnLIB option of DSNH command 335
PNODEFER option of DSNH command 345
POPTHINT option of DSNH command 345
POPTION option of DSNH command 336
POSTPONED option
    DISPLAY THREAD command 290
postponed units of recovery, recovering 425
POWNER option of DSNH command 345
PPATH option of DSNH command 345
PQUALIFIER option of DSNH command 345
PRECOMP option of DSNH command 336
precompiler
    DSNH command options 334
    invoking DSNH 321
    producing members for 131
PRELEASE option of DSNH command 345
PRELINK option of DSNH command 336
PREOPT option of DSNH command 345
PRINT option of DSNH command 336
PROC option
    DISPLAY THREAD command 290
processing, parallel
    VPPSEQT option of ALTER BUFFERPOOL command 31
product-sensitive programming information, described 656
PROGAUTH option
    BIND PLAN subcommand 143
    REBIND PLAN subcommand 143
PROGRAM option of RUN subcommand 435
programming interface information, described 656
PSECSPAC option of DSNH command 336
PSPACE option of DSNH command 337
PSPI symbols 656
PVALIDATE option of DSNH command 345
PVT option of MODIFY irlmproc,SET command of z/OS 384

Q

QUALIFIER option
    BIND PACKAGE subcommand 143
    BIND PLAN subcommand 143
    DSNH command 343
    REBIND PACKAGE subcommand 143
    REBIND PLAN subcommand 143
query
    binding 71
    removal 361
QUERYACCELERATION option
    BIND PACKAGE subcommand 144
    REBIND PACKAGE subcommand 144
QUERYID option
    FREE QUERY subcommand 146
QUEUE option of STOP FUNCTION SPECIFIC 546
QUIESCE option
    STOP DB2 command 537
    STOP DDF command 539
QUIESCE utility, effects of TERM command 579
QUOTE option
    DCLGEN subcommand 174
    DSNH command 332

R

RATIO option of ALTER GROUPBUFFERPOOL command 38
RCTERM option of DSNH command 337
REBIND PACKAGE subcommand of DSN
    description 397
    example 405
    option descriptions 81, 156
REBIND PLAN subcommand of DSN
    description 407
    option descriptions 81, 156
REBIND TRIGGER PACKAGE subcommand of DSN
    description 413
    example 416
    option descriptions 81, 156
rebinding
    initiating 397, 407
    options for 81, 156

REBUILD INDEX utility, TERM command effects 579
recognition character 3
RECOVER BSDS command
  description 419
  Example 419
RECOVER INDOUBT command
  description 421
  example 423
  Option descriptions 422
RECOVER POSTPONED command
  description 425
  Example 426
RECOVER utility, TERM command effects 579
recovery
  BSDS 419
  indoubt threads 421
  postponed units of recovery 425
REFRESH DB2 command
  example 428
REFRESH DB2, EARLY command
  description 427
REFRESH DB2,EARLY command
  Option descriptions 427
REGISTER XMLSCHEMA command 639
REJECT option of STOP FUNCTION SPECIFIC 546
RELEASE option
  BIND PACKAGE subcommand 146
  BIND PLAN subcommand
    description 146
  DSNH command 343
  REBIND PACKAGE subcommand 146
  REBIND PLAN subcommand 146
  REBIND TRIGGER PACKAGE subcommand 146
RELOAD option of SET SYSPARM command 448
REMOTE option of DSNH command 345
REMOVE XMLSCHEMA command 641
REOPT option
  BIND PACKAGE subcommand 149, 152
  BIND PLAN subcommand 149, 152
  DSNH command 343
  REBIND PACKAGE subcommand 149, 152
  REBIND PLAN subcommand 149, 152
REORG INDEX utility, effects of TERM command 579
REORG TABLESPACE utility, effects of TERM command 579
REPAIR utility, effects of TERM command 579
REPLACE option
  DCLGEN subcommand 174
  DSNH command 340, 343
replacing, version of a package 85
REPLVER option
  BIND PACKAGE subcommand 84
  DSNH command 345
  effect of 85
REPORT utility, effects of TERM command 579
reports
  summary report
    DISPLAY GROUPBUFFERPOOL command 250
RES option of STOP TRACE command 570
RESET GENERICLU command
  description 429
  example 430
  Option descriptions 429
RESET INDOUBT command
  description 431
RESET INDOUBT command *(continued)*
  Option descriptions 432
resource limit facility
  displaying 221
REST 103–105, 157, 159
REST service
  DATE bind option 103
  DEC bind option 104
  DECDEL bind option 105
  REST 103–105, 157, 159
  STRDEL bind option 157
  TIME bind option 159
restarting
  status of Db2 resources 427, 469
  terminated utility job steps 578
RESTRICT option of DISPLAY DATABASE command 219
RESTSERVICEDEFAULT bind option 151
RESUME option
  SET LOG command 443
RETAIN option
  BIND PLAN subcommand 85
  DSNH command 343
retained locks 218
RETRY option
  DSN command 317
return code
  DSN command 318
  RUN subcommand of DSN 318
RMARGIN option of DCLGEN subcommand 175
RMID option
  DISPLAY TRACE command 305
  START TRACE command 509
  STOP TRACE command 569
RO option of START DATABASE command 464
ROLE option
  DISPLAY TRACE command 304
  START TRACE command 514
  STOP TRACE command 569
RREPL option of START DATABASE command 464
RRSURID option of DISPLAY THREAD command 292
RUN
  subcommand of DSN
    description 435
    example 437
    Option descriptions 435
    return codes 318
RUN option
  DSNH command parameters 337
RUNIN option of DSNH command 337
running DSNH processing 321
RUNOUT option of DSNH command 337
RUNSTATS utility, effects of TERM command 579
RW option of START DATABASE command 464

S

SA_DCC option
  START ML command 491
  STOP ML command 551
scanning rules, Db2 commands 3
schema.partial-name option
  DISPLAY FUNCTION SPECIFIC command 238
  START FUNCTION SPECIFIC command 482
  STOP FUNCTION SPECIFIC command 546

schema.specific-function-name option
DISPLAY FUNCTION SPECIFIC command 238
START FUNCTION SPECIFIC command 482
STOP FUNCTION SPECIFIC command 546
schema.specific-function-name option of DISPLAY FUNCTION SPECIFIC command 238
scope of commands 3
SCOPE option
ARCHIVE LOG command 49
DISPLAY FUNCTION SPECIFIC command 238
DISPLAY PROCEDURE command 268
DISPLAY THREAD command 289
DISPLAY TRACE command 305
START FUNCTION SPECIFIC command 482
START irlmproc command 488
START PROCEDURE command 494
STOP FUNCTION SPECIFIC command 546
STOP PROCEDURE command 554
STOP TRACE command 569
SERVICE
binding 75
displaying 275
freeing 365
starting 501
stopping 561
SET ARCHIVE command
description 439
example 440
Option descriptions 439
SET LOG command
description 441
example 444
Option descriptions 442
SET SYSPARM command
description 447
example 448
Option descriptions 448
shortcut keys
keyboard xiii
SINGLE option
SET LOG command 442
SMF option
DISPLAY TRACE command 305
START TRACE command 510
STOP TRACE command 570
SOMDLLI option of DSNH command 338
SOURCE option of DSNH command 338
SPACENAM option
DISPLAY DATABASE command 217
START DATABASE command 463
STOP DATABASE command 533
SPACEUN option of DSNH command 338
SPSEQT option of ALTER BUFFERPOOL command 33
SPSIZE option of ALTER BUFFERPOOL command 33
SPUFI, description 451
SQL option of DSNH command 338
SQLDDNAME bind option 153
SQLDELIM option of DSNH command 338
SQLENCODING bind option 154
SQLERROR option
BIND PACKAGE subcommand 155
DSNH command 345
SQLOPT option
START ML command 491
SQLOPT option *(continued)*
STOP ML command 551
SQLRULES option
BIND PLAN subcommand 156
REBIND PLAN subcommand 156
SQLRULES option of DSNH command 343
SRC (subsystem recognition character) 3
SRV option
DISPLAY TRACE command 305
START TRACE command 510
STOP TRACE command 570
stabilized dynamic SQL
freeing 353
START ACCEL command
Option descriptions 453
START admtproc command of z/OS
description 457
Examples 457
START DATABASE command
description 461
example 467
Option descriptions 462
recovering object in group buffer pool 465
recovering pages on logical page list 465
START DB2 command
description 469
examples 472
Option descriptions 470
START DDF command 475
START FUNCTION SPECIFIC command
description 481
example 483
Option descriptions 482
START irlmproc command of z/OS
description 485
Examples 489
Option descriptions 486
START ML command
examples 492
START PROCEDURE command
description 493
example 494
Option descriptions 494
START PROFILE command
example 497
START RESTSVC subcommand of DSN
description 501
START RLIMIT command
description 499
START TRACE command
description 505
example 523
Option descriptions 509
STARTUP option of SET SYSPARM command 448
STAT option
DISPLAY TRACE command 304
MODIFY TRACE command 394
STOP TRACE command 569
statistics trace
stopping 565
statistics, trace
displaying 301

statistics, trace *(continued)*
starting 505
status
checking, IRLM 387
cross-system coupling facility (XCF), status of members 241
STDSQL option of DSNH command 338
STOP ACCEL command
description 525
example 526
STOP admtproc command of z/OS
description 527
Examples 527
STOP DATABASE command
description 531
example 535
Option descriptions 532
STOP DB2 command
description 537
Example 538
STOP DDF command
description 539
example 541
STOP FUNCTION SPECIFIC command
description 545
disabling a function permanently 547
Examples 547
limitations of 547
Option descriptions 546
STOP irlmproc command of z/OS 549
STOP ML command
description 551
examples 552
STOP PROCEDURE command
description 553
example 555
Option descriptions 554
STOP PROFILE command
example 557
STOP RESTSVC subcommand of DSN
description 561
STOP RLIMIT command 559
STOP TRACE command
description 565
example 574
Option descriptions 569
STOR option of MODIFY irlmproc,STATUS command of z/OS 388
stored procedure
displaying status 267
starting 493
stopping 553
STOSPACE utility, effects of TERM command 579
STRDEL bind option 157
string, delimiter
COBOL 174
SQL 174
STRUCTURE option of DCLGEN subcommand 174
SUB option of TRACE CT command 582
SUFFIX option of DSNH command 339
summary report
DISPLAY GROUPBUFFERPOOL command 250
SUSPEND option
SUSPEND option *(continued)*
SET LOG command 442
STOP DDF command 540
SWITCH option
REBIND PACKAGE subcommand 157
REBIND TRIGGER PACKAGE subcommand 157
syntax diagram
how to read xiv
SYSTEM option
DISPLAY THREAD command 290
DSN command 317
DSNH command 339
SYSTIMESENSITIVE option
BIND PACKAGE subcommand 158
REBIND PACKAGE subcommand 158
REBIND TRIGGER PACKAGE subcommand 158

T

TABLE option of DCLGEN subcommand 172
TDATA option of START TRACE command 520
TERM option of DSNH command 339
TERM UTILITY command
description 577
example 579
terminating
databases 531
DB2, description 537
IRLM
abnormal 377
normal 549
stored procedures 553
trace activity 565
utilities, description 577
TEST option
DSN command 317
thread
ACTIVE option
DISPLAY THREAD command 287
canceling 165
displaying 287
message
DISPLAY THREAD with ACTIVE 287
TIME bind option 159
TIME option
ARCHIVE LOG command 48
DSNH command 339
SET ARCHIVE command 440
TIMEOUT option of MODIFY irlmproc,SET command of z/OS 384
TNO option
DISPLAY TRACE command 305
MODIFY TRACE command 394
trace
changing active traces 393
displaying 301
IFCIDs activated by trace class 514
starting 505
stopping 565
TRACE CT command of z/OS
description 581
example 583
Option descriptions 581

TRACE option
MODIFY irlmproc,SET command of z/OS 384
MODIFY irlmproc,STATUS command of z/OS 388
START irlmproc command 488
START TRACE command 520
TRACK option of DSNH 338
TSO CLIST commands 9
TSO CLISTs of DSNH 321
TSO option of DSNH command 337
tutorial
Db2 command line processor 599
TYPE option
DISPLAY GROUPBUFFERPOOL command 249
DISPLAY THREAD command 289
types of commands
Administrative task scheduler 9
CICS 9
Db2 9
DSN and subcommands 9
IMS 9
TSO CLISTs 9
z/OS IRLM 9

U

UNLOAD utility, effects of TERM command 579
USE option of DISPLAY DATABASE command 217
USERID option
DISPLAY TRACE command 304
START TRACE command 513
STOP TRACE command 569
UT option of START DATABASE command 464
utilities
displaying status 311
identifier 578
terminating 577

V

VALIDATE option
BIND PACKAGE subcommand 160
BIND PLAN subcommand 160
DSNH command 343
REBIND PACKAGE subcommand 160
REBIND PLAN subcommand 160
VDWQT option of ALTER BUFFERPOOL command 31
VERSION bind option 161
version of a package
BIND PACKAGE subcommand 135
REBIND PACKAGE subcommand 135
VERSION option of DSNH command 339
VPPSEQT option of ALTER BUFFERPOOL command 31
VPSEQT option of ALTER BUFFERPOOL command 30
VPSIZE option of ALTER BUFFERPOOL command 28
VPSIZEMAX option of ALTER BUFFERPOOL command 29
VPSIZEMIN option of ALTER BUFFERPOOL command 29
VPXPSEQT option of ALTER BUFFERPOOL command 31
VSAM (virtual storage access method) password, DCLGEN subcommand 173
VTAM (Virtual Telecommunications Access Method), DISPLAY NET command 167

W

WAIT option of ARCHIVE LOG command 49
WEPR option of DISPLAY DATABASE command 218
WORKUNIT option of DSNH command 339
WRAP option of TRACE CT command 581
WRKSTN option
DISPLAY TRACE command 304
START TRACE command 513
STOP TRACE command 569
WSECPAC option of DSNH command 339
WSPACE option of DSNH command 340
WTRSTART option of TRACE CT command 581
WTRSTOP option of TRACE CT command 582

X

XAPPNAME option
DISPLAY TRACE command 304
START TRACE command 513
STOP TRACE command 569
XAUTHID option
DISPLAY TRACE command 304
START TRACE command 511
STOP TRACE command 569
XCF (cross-system coupling facility), status of members 241
XCONNID option
DISPLAY TRACE command 304
START TRACE command 513
STOP TRACE command 569
XCORRID option
DISPLAY TRACE command 304
START TRACE command 514
STOP TRACE command 569
XLIB option of DSNH command 340
XLOC option
START TRACE command 304, 512
XPKGCOL option
DISPLAY TRACE command 304
START TRACE command 511
STOP TRACE command 569
XPKGLOC option
DISPLAY TRACE command 304
START TRACE command 511
STOP TRACE command 569
XPKGPROG option
DISPLAY TRACE command 304
START TRACE command 511
STOP TRACE command 569
XPLAN option
DISPLAY TRACE command 304
START TRACE command 511
STOP TRACE command 569
XREF option of DSNH command 340
XROLE option
DISPLAY TRACE command 304
START TRACE command 514
STOP TRACE command 569
XUSERID option
DISPLAY TRACE command 304
START TRACE command 513
STOP TRACE command 569
XWRKSTN option
DISPLAY TRACE command 304

XWRKSTN option *(continued)*
START TRACE command 513
STOP TRACE command 569

Y

YES option
START irlmproc command 489

Z

z/OS commands
MODIFY irlmproc,ABEND 377
MODIFY irlmproc,DIAG 379
MODIFY irlmproc,PURGE 381
MODIFY irlmproc,SET 383
MODIFY irlmproc,STATUS 387
START admtproc 457
START irlmproc 485
STOP admtproc 527
STOP irlmproc 549
TRACE CT 581
z/OS UNIX System Services
Db2 command line processor 585

Product Number: 5650-DB2
5770-AF3

SC27-8848-02